AUTHENTICATED
U.S. GOVERNMENT
INFORMATION
GPO

Federal Register

7–27–00 Thursday
Vol. 65 No. 145 July 27, 2000
Pages 46085–46334

The **FEDERAL REGISTER** is published daily, Monday through Friday, except official holidays, by the Office of the Federal Register, National Archives and Records Administration, Washington, DC 20408, under the Federal Register Act (44 U.S.C. Ch. 15) and the regulations of the Administrative Committee of the Federal Register (1 CFR Ch. I). The Superintendent of Documents, U.S. Government Printing Office, Washington, DC 20402 is the exclusive distributor of the official edition.

The **Federal Register** provides a uniform system for making available to the public regulations and legal notices issued by Federal agencies. These include Presidential proclamations and Executive Orders, Federal agency documents having general applicability and legal effect, documents required to be published by act of Congress, and other Federal agency documents of public interest.

Documents are on file for public inspection in the Office of the Federal Register the day before they are published, unless the issuing agency requests earlier filing. For a list of documents currently on file for public inspection, see http://www.nara.gov/fedreg.

The seal of the National Archives and Records Administration authenticates the Federal Register as the official serial publication established under the Federal Register Act. Under 44 U.S.C. 1507, the contents of the **Federal Register** shall be judicially noticed.

The **Federal Register** is published in paper and on 24x microfiche. It is also available online at no charge as one of the databases on GPO Access, a service of the U.S. Government Printing Office.

The online edition of the **Federal Register** is issued under the authority of the Administrative Committee of the Federal Register as the official legal equivalent of the paper and microfiche editions (44 U.S.C. 4101 and 1 CFR 5.10). It is updated by 6 a.m. each day the **Federal Register** is published and it includes both text and graphics from Volume 59, Number 1 (January 2, 1994) forward.

GPO Access users can choose to retrieve online **Federal Register** documents as TEXT (ASCII text, graphics omitted), PDF (Adobe Portable Document Format, including full text and all graphics), or SUMMARY (abbreviated text) files. Users should carefully check retrieved material to ensure that documents were properly downloaded.

On the World Wide Web, connect to the **Federal Register** at http://www.access.gpo.gov/nara. Those without World Wide Web access can also connect with a local WAIS client, by Telnet to swais.access.gpo.gov, or by dialing (202) 512-1661 with a computer and modem. When using Telnet or modem, type swais, then log in as guest with no password.

For more information about GPO Access, contact the GPO Access User Support Team by E-mail at gpoaccess@gpo.gov; by fax at (202) 512–1262; or call (202) 512–1530 or 1–888–293–6498 (toll free) between 7 a.m. and 5 p.m. Eastern time, Monday–Friday, except Federal holidays.

The annual subscription price for the **Federal Register** paper edition is $638, or $697 for a combined **Federal Register,** Federal Register Index and List of CFR Sections Affected (LSA) subscription; the microfiche edition of the **Federal Register** including the Federal Register Index and LSA is $253. Six month subscriptions are available for one-half the annual rate. The charge for individual copies in paper form is $9.00 for each issue, or $9.00 for each group of pages as actually bound; or $2.00 for each issue in microfiche form. All prices include regular domestic postage and handling. International customers please add 25% for foreign handling. Remit check or money order, made payable to the Superintendent of Documents, or charge to your GPO Deposit Account, VISA, MasterCard or Discover. Mail to: New Orders, Superintendent of Documents, P.O. Box 371954, Pittsburgh, PA 15250–7954.

There are no restrictions on the republication of material appearing in the **Federal Register.**

How To Cite This Publication: Use the volume number and the page number. Example: 65 FR 12345.

SUBSCRIPTIONS AND COPIES

PUBLIC	
Subscriptions:	
Paper or fiche	**202–512–1800**
Assistance with public subscriptions	**512–1806**
General online information	**202–512–1530; 1–888–293–6498**
Single copies/back copies:	
Paper or fiche	**512–1800**
Assistance with public single copies	**512–1803**
FEDERAL AGENCIES	
Subscriptions:	
Paper or fiche	**523–5243**
Assistance with Federal agency subscriptions	**523–5243**

Printed on recycled paper.

Contents

Federal Register

Vol. 65, No. 145

Thursday, July 27, 2000

Agricultural Marketing Service
RULES
Tobacco inspection:
Flue-cured tobacco, 46085–46087
PROPOSED RULES
Fruits, vegetables, and other products, fresh:
Destination market inspections; fees; withdrawn, 46114–46115

Agriculture Department
See Agricultural Marketing Service
See Commodity Credit Corporation
See Food Safety and Inspection Service
See Natural Resources Conservation Service

Civil Rights Commission
NOTICES
Meetings; State advisory committees:
Delaware, 46146

Coast Guard
PROPOSED RULES
Electrical engineering:
Marine shipboard electrical cable standards, 46143–46144
Vessel documentation and measurement:
Vessel ownership and financing; citizenship standards, 46137–46143

Commerce Department
See Export Administration Bureau
See National Oceanic and Atmospheric Administration

Commodity Credit Corporation
PROPOSED RULES
Loan and purchase programs:
Bioenergy Program, 46115–46119

Commodity Futures Trading Commission
PROPOSED RULES
Commodity pool operators and commodity trading advisors:
Commodity pools; profile documents; disclosure, 46122–46126

Defense Department
See Navy Department
PROPOSED RULES
Federal Acquisition Regulation (FAR):
Final contract voucher submission, 46331–46333

Denali Commission
NOTICES
Work plan for 2002 FY, 46154–46161

Education Department
PROPOSED RULES
Postsecondary education:
Federal Family Education Loan and William D. Ford Federal Direct Loan Programs, 46315–46322
Federal Perkins Loan Program, 46127–46131
Special Leveraging Educational Assistance Partnership Program, 46323–46329

Employment and Training Administration
NOTICES
Agency information collection activities:
Proposed collection; comment request; correction, 46179

Energy Department
See Federal Energy Regulatory Commission

Environmental Protection Agency
RULES
Hazardous waste:
Project XL program; site-specific projects—
International Paper Androscoggin Mill Facility, ME; effluent improvement project, 46104–46108
Superfund program:
National oil and hazardous substances contingency plan—
National priorities list update, 46096–46104
PROPOSED RULES
Air quality implementation plans; approval and promulgation; various States:
California, 46131
Superfund program:
National oil and hazardous substances contingency plan—
National priorities list update, 46131–46137
NOTICES
Meetings:
Science Advisory Board, 46166
Project XL (excellence and leadership) innovative technologies projects:
Columbus, OH, 46166–46167
Reports and guidance documents; availability, etc.:
Rivers and streams; nutrient criteria technical guidance manual, 46167–46169
Superfund; response and remedial actions, proposed settlements, etc.:
Copley Square Plaza Site, OH, 46169

Export Administration Bureau
RULES
Export administration regulations:
Serbia; foreign registered aircraft; reexports, 46091–46092

Farm Credit Administration
RULES
Farm credit system:
Practice and procedure—
Civil money penalties; inflation adjustments, 46087–46088

Federal Aviation Administration
RULES
Airworthiness directives:
McDonnell Douglas, 46199–46202
Standard instrument approach procedures, 46088–46091
PROPOSED RULES
Airworthiness directives:
British Aerospace, 46119–46122
McDonnell Douglas, 46202–46226

NOTICES
Advisory circulars; availability, etc.:
Turbine engine powered airplanes; fuel venting and exhaust emissions requirements, 46191–46192
Committees; establishment, renewal, termination, etc.:
Aircraft Repair and Maintenance Advisory Committee, 46192–46193
Passenger facility charges; applications, etc.:
San Angelo Regional Airport, TX, 46193
Reports and guidance documents; availability, etc.:
Seat dynamic testing for plinths and pallets; compliance demonstration, 46193–46195

Federal Communications Commission
RULES
Common carrier services:
Wireless telecommunications services—
Microwave facilities relocation from 1850-1990 MHz band; cost sharing plan, 46109–46113
Practice and procedure:
Computation of time, 46108–46109
NOTICES
Agency information collection activities:
Proposed collection; comment request, 46169–46170

Federal Deposit Insurance Corporation
NOTICES
Meetings; Sunshine Act, 46170

Federal Energy Regulatory Commission
NOTICES
Environmental statements; availability, etc.:
Questar Southern Trails Pipeline Co., 46162–46163
Hydroelectric applications, 46164–46165
Applications, hearings, determinations, etc.:
American Ref-Fuel Co. of Delaware Valley, L.P., 46161
North Central Missouri Electric Cooperative, Inc., 46161
O.L.S. Energy-Camarillo, 46161–46162
O.L.S. Energy-Chino, 46162
Panda-Brandywine, L.P., 46162

Federal Housing Enterprise Oversight Office
PROPOSED RULES
Safety and soundness standards, 46119

Fish and Wildlife Service
NOTICES
Endangered and threatened species permit applications, 46170–46171
Environmental statements; availability, etc.:
Little Darby National Wildlife Refuge, OH, 46171–46172
Environmental statements; notice of intent:
Southern sea otters off Pacific Coast; translocation, 46172–46175

Food Safety and Inspection Service
NOTICES
Meetings:
Codex Alimentarius Commission—
Processed Fruits and Vegetables Codex Committee, 46145–46146

General Services Administration
PROPOSED RULES
Federal Acquisition Regulation (FAR):
Final contract voucher submission, 46331–46333

Housing and Urban Development Department
See Federal Housing Enterprise Oversight Office

Indian Affairs Bureau
NOTICES
Agency information collection activities:
Submission for OMB review; comment request; correction, 46175

Interior Department
See Fish and Wildlife Service
See Indian Affairs Bureau
See Land Management Bureau
See Minerals Management Service
See National Park Service

Justice Department
See Prisons Bureau

Labor Department
See Employment and Training Administration
See Pension and Welfare Benefits Administration
NOTICES
Committees; establishment, renewal, termination, etc.:
Employee Welfare and Pension Benefit Plans Advisory Council, 46179

Land Management Bureau
NOTICES
Alaska Native claims selection:
Gwitchyaazhee Corp., 46175
Seldovia Native Association, Inc., 46175
Coal leases, exploration licenses, etc.:
Wyoming, 46176
Committees; establishment, renewal, termination, etc.:
Resource Advisory Councils—
Northeastern Great Basin, 46176
Realty actions; sales, leases, etc.:
Arizona, 46176–46177
Wild horses removal:
Colorado; decision rescinded, 46177

Minerals Management Service
RULES
Outer Continental Shelf; oil, gas, and sulphur operations:
Producer-operated pipelines that cross directly into State waters, 46092–46096
PROPOSED RULES
Outer Continental Shelf; oil, gas, and sulphur operations:
Oil and gas drilling requirements, 46126–46127

Mississippi River Commission
NOTICES
Meetings; Sunshine Act, 46180–46181

National Aeronautics and Space Administration
PROPOSED RULES
Federal Acquisition Regulation (FAR):
Final contract voucher submission, 46331–46333

National Highway Traffic Safety Administration
PROPOSED RULES
Motor vehicle safety standards:
Platform lift systems for accessible vehicles and platform lift installations on vehicles, 46227–46258

National Oceanic and Atmospheric Administration
NOTICES
New Bedford Harbor Trustee Council; restoration ideas for New Bedford Harbor, MA; comment request, 46146–46152

National Park Service
NOTICES
Meetings:
Golden Gate National Recreation Area and Point Reyes National Seashore Advisory Commission, 46177–46178

National Science Foundation
NOTICES
Meetings:
Chemical and Transport Systems Special Emphasis Panel, 46181
Developmental Mechanism Advisory Panel, 46181
Earth Sciences Proposal Review Panel, 46181
Experimental and Integrative Activities Special Emphasis Panel, 46181–46182
U.S. National Assessment Synthesis Team, 46182

Natural Resources Conservation Service
NOTICES
Meetings:
Farmland Protection Policy Advisory Committee, 46146

Navy Department
NOTICES
Meetings:
Naval War College, Board of Advisors to President, 46152
Patent licenses; non-exclusive, exclusive, or partially exclusive:
International Aero, Inc., 46152
Marine Desalination Systems, LLC, 46152–46153
Senior Executive Service:
Performance Review Board; membership, 46153–46154

Nuclear Regulatory Commission
NOTICES
Decommissioning plans; sites:
UCAR Carbon Co., Inc.; Union Carbide Corp.facility, Lawrenceburg, TN, 46185–46187
Meetings:
Burnup credit in spent fuel shipping casks; technical experts, 46187
Reports and guidance documents; availability, etc.:
Management directive for review of petitions; revision, 46259–46313
Applications, hearings, determinations, etc.:
AmerGen Energy Co. LLC, 46182–46183
Niagara Mohawk Power Corp., 46183–46185

Office of Federal Housing Enterprise Oversight
See Federal Housing Enterprise Oversight Office

Pension and Welfare Benefits Administration
NOTICES
Meetings:
Employee Welfare and Pension Benefit Plans Advisory Council, 46179–46180

Postal Service
NOTICES
Meetings; Sunshine Act, 46187

Prisons Bureau
NOTICES
Environmental statements; notice of intent:
Florida, Georgia, and Mississippi; private correctional facilities construction, 46178

Securities and Exchange Commission
NOTICES
Self-regulatory organizations; proposed rule changes:
Municipal Securities Rulemaking Board, 46188–46189

Small Business Administration
NOTICES
Disaster loan areas:
Missouri, 46190
Wisconsin, 46190
Applications, hearings, determinations, etc.:
Selby Venture Partners II, L.P., 46189–46190

Social Security Administration
NOTICES
Privacy Act:
Computer matching programs, 46190–46191

State Department
NOTICES
Art objects; importation for exhibition:
Golden Deer of Eurasia: Scythian and Sarmatian Treasures from the Russian Steppes, 46191

Surface Transportation Board
NOTICES
Railroad services abandonment:
Rutherford Railroad Development Corp., 46195–46196

Transportation Department
See Coast Guard
See Federal Aviation Administration
See National Highway Traffic Safety Administration
See Surface Transportation Board

Treasury Department
NOTICES
Agency information collection activities:
Submission for OMB review; comment request, 46196–46197

Separate Parts In This Issue

Part II
Department of Transportation, Federal Aviation Administration, 46199–46226

Part III
Department of Transportation, National Highway Traffic Safety Administration, 46227–46258

Part IV
Nuclear Regulatory Commission, 46259–46313

Part V
Department of Education, 46315–46322

Part VI
Department of Education, 46323–46329

Part VII
Department of Defense, General Services Administration, National Aeronautics and Space Administration, 46331–46333

Reader Aids

Consult the Reader Aids section at the end of this issue for phone numbers, online resources, finding aids, reminders, and notice of recently enacted public laws.

CFR PARTS AFFECTED IN THIS ISSUE

A cumulative list of the parts affected this month can be found in the Reader Aids section at the end of this issue.

7 CFR
29 46085
Proposed Rules:
51 46114
1424 46115

12 CFR
622 46087
Proposed Rules:
Ch. XVII 46119

14 CFR
39 46200
97 (2 documents) 46088, 46090
Proposed Rules:
39 (11 documents) 46119, 46203, 46204, 46206, 46210, 46211, 46214, 46216, 46218, 46221, 46223

15 CFR
746 46091

17 CFR
Proposed Rules:
4 46122

30 CFR
250 46092
Proposed Rules:
250 46126

34 CFR
Proposed Rules:
674 46127
682 46316
685 46324
692 46324

40 CFR
300 46096
430 46104
Proposed Rules:
52 46131
300 46131

46 CFR
Proposed Rules:
67 46137
110 46143
111 46143

47 CFR
1 46108
24 46109

48 CFR
Proposed Rules:
42 46332
52 46332

49 CFR
Proposed Rules:
571 46228

Rules and Regulations

Federal Register
Vol. 65, No. 145
Thursday, July 27, 2000

This section of the FEDERAL REGISTER contains regulatory documents having general applicability and legal effect, most of which are keyed to and codified in the Code of Federal Regulations, which is published under 50 titles pursuant to 44 U.S.C. 1510.

The Code of Federal Regulations is sold by the Superintendent of Documents. Prices of new books are listed in the first FEDERAL REGISTER issue of each week.

DEPARTMENT OF AGRICULTURE

Agricultural Marketing Service

7 CFR Part 29

[Docket No. TB–99–02]

RIN 0581–AB75

Tobacco Inspection

AGENCY: Agricultural Marketing Service, USDA.

ACTION: Final rule.

SUMMARY: The Department of Agriculture (Department) is adopting as a final rule, the regulations for flue-cured tobacco to more accurately describe tobacco as it presently appears at the marketplace. The revision will add a new provision to the official grade standards for flue-cured tobacco to denote that any lot of baled tobacco that has not been opened for inspection be graded by the exterior only. Additional bale dimensions and space requirements will be established for uniform marketing display in the warehouses, and a revision will be made in the poundage adjustment for a warehouse selling in excess of the sales schedule for designated and undesignated producer tobacco.

EFFECTIVE DATE: July 28, 2000.

FOR FURTHER INFORMATION CONTACT: John P. Duncan III, Deputy Administrator, Tobacco Programs, Agricultural Marketing Service (AMS), United States Department of Agriculture (USDA), Room 502 Annex Building, PO Box 96456, Washington, DC 20090–6456. Telephone (202) 205–0567.

SUPPLEMENTARY INFORMATION: The Department published in the **Federal Register** on March 15, 2000 (65 FR 13915) a proposed rule amending the regulations at 7 CFR part 29, subpart B, Regulations; subpart C, Standards, and subpart G, Policy Statement and Regulations Governing Availability of Tobacco Inspection and Price Support Services to Flue-Cured Tobacco on Designated Markets. The Department requested comments on the regulations. The comment period expired on May 15, 2000, and AMS received no comments on the amendments.

The final rule will add a new provision to the grade standards for baled flue-cured tobacco, establish bale dimensions and spacing requirements, and revise the poundage adjustment for a warehouse selling in excess of the sales schedule for designated and undesignated tobacco, pursuant to the authority contained in the Tobacco Inspection Act of 1935, as amended (49 Stat.731; 7 U.S.C. 511 *et seq.*).

On January 20, 2000, the Flue-Cured Tobacco Advisory Committee (FCTAC) met and reviewed recommendations from the tobacco industry on the flue-cured bale as an alternative packaging method. The recommendations made by the FCTAC have been included in this final rule for regulatory action. The revisions will add a new provision to the official standards for flue-cured tobacco to denote that any lot of baled tobacco that has not been opened for inspection will be graded by the exterior only, establish dimension and spacing requirements for marketing display of bales, and revise the poundage adjustment for a warehouse selling in excess of the sales schedule. An earlier proposed rule concerning bale inspection was issued on May 12, 1999 (64 FR 25462) and was withdrawn on July 22, 1999 (64 FR 39432). The notice of the withdrawal stated that we intended to publish an advance notice of proposed rulemaking to solicit additional input. The FCTAC advised that the rule be published promptly, and we agree that the issues have already been considered within the industry. Accordingly, we published in the **Federal Register** a proposed rule on March 15, 2000.

Flue-cured tobacco has been traditionally marketed in a sheet with a maximum weight of 275 pounds. The dimensions of the sheet is 8 feet x 8 feet and is composed of burlap or other synthetic materials. The tobacco is arranged in a circular pattern on the sheet and the corners are tied diagonally for handling purposes. The lot of sheeted tobacco is approximately 4 feet in diameter.

The tobacco industry has experimented with the bale as an alternative packaging method for marketing flue-cured tobacco during the past 4 years. This alternative package is a 42-inch wide x 42-inch high x 40-inch long bale weighing approximately 750 pounds. The bale is compressed together and bound by metal wires. The FCTAC recommended bale dimensions of 42 inches x 42 inches x 40 inches. Because uniformity in the size of bales is an important aspect of the acceptability of baled tobacco, bales which are not approximately these dimensions will be ineligible for a standard grade and designated ''No-G.''

The current regulations under the Tobacco Inspection Act do not specifically restrict baling as a packaging method for flue-cured tobacco. However, the current regulations do require that an official grade determination be based on a thorough examination of a lot of tobacco. A minimum of three locations within a lot is required to be sampled to show the range of the entire lot. However, the buying segment of the tobacco industry has opposed opening bales citing integrity issues.

During the 1998 flue-cured marketing season, Tobacco Programs conducted a research project on marketing flue-cured tobacco in bales. The research focused on the grade and condition of flue-cured baled tobacco from the beginning to the end of the marketing process. Research data was collected at the farm level as the tobacco was compressed into a bale, at the auction warehouse before and during the day of sale, and at the processing facility as the bale was disassembled.

The purpose of the research project was to determine if significant variations existed between the exterior and interior of the flue-cured bale that would impact the official grade standards. The findings indicated there was no significant variation in grade and condition observed.

Accordingly, this rule will revise the current tobacco regulations to allow the inspection of bales of flue-cured tobacco without the bale being opened for inspection. All lots of tobacco that are subject to mandatory inspection on a designated market should be made accessible to perform grading activities. The recommendation was made that each lot of baled flue-cured tobacco

displayed for sale on auction warehouse floors be placed in rows end to end so the open side of the bales are facing the aisles. Also, a minimum space of 30 inches between the rows with the distance between lots of tobacco within the row shall be no less than 18 inches between immediately adjacent lots was recommended. These two spacing proposals will promote the orderly marketing of baled tobacco by providing a uniform marketing display in the warehouse. This will also provide accessibility for inspection of the bales.

An additional revision will increase the poundage adjustment of 2,500 pounds by doubling the poundage amount for a warehouse selling in excess of the daily sales schedule. For example, 2,500 pounds will become 5,000 pounds and 5,000 pounds will become 10,000 pounds. The same will be applicable to undesignated producer tobacco, with 500 pounds becoming 1,000 pounds and 1,000 pounds becoming 2,000 pounds. This action is being adopted because the bale weight is approximately three times as much as tobacco marketed in sheets. This will give the farmers a chance to complete selling their lots of tobacco when the daily sales schedule has been depleted. This rule should meet industry needs for marketing tobacco in bales.

This rule has been determined to be ''non significant'' for purposes of Executive Order 12866, and therefore, has not been reviewed by the Office of Management and Budget.

This final rule has been reviewed under Executive Order 12988, Civil Justice Reform. This action is not intended to have retroactive effect. This rule will not preempt any State or local laws, regulations, or policies, unless they present an irreconcilable conflict with this rule. There are no administrative procedures which must be exhausted prior to any judicial challenge to the provisions of this rule.

Additionally, in conformance with the provisions of the Regulatory Flexibility Act (5 U.S.C. 601 *et seq.*), full consideration has been given to the potential economic impact upon small businesses. All tobacco warehouses and producers fall within the confines of ''small business'' which are defined by the Small Business Administration (13 CFR 121.201) as those having annual receipts of less than $500,000, and small agricultural service firms are defined as those whose annual receipts are less than $3,500,000. There are approximately 190 tobacco warehouses and approximately 30,000 producers. The Agricultural Marketing Service has determined that this action would not have a significant economic impact on a substantial number of small entities. A new rule will be added to the official standards for flue-cured tobacco to denote that any lot of baled tobacco that has not been opened for inspection will be graded by the exterior only. Accordingly, this change will allow grading of a closed package from the exterior only, and will assist in maintaining program integrity. Additional bale dimensions and space requirements will be established for uniform marketing display in the warehouses and will provide accessibility for inspection of the bales. A revision will be made to the poundage adjustment for a warehouse selling in excess of the sales schedule and for undesignated producer tobacco in order to take into account the marketing of bales. These changes will apply equally to both small and large entities and they will take into account the marketing of flue-cured tobacco as it presently appears in the marketplace. Pursuant to 5 U.S.C. 553, it is determined that good cause exists for not postponing the effective date of this rule until 30 days after publication in the **Federal Register** because: (1) The flue-cured tobacco marketing season will begin in July and it is essential that the requirements be uniform for the entire marketing season, and (2) a 60-day comment period was provided for the proposed rule and no comments were received.

List of Subjects in 7 CFR Part 29

Administrative practice and procedure, Advisory committees, Government publications, Imports, Pesticides and pests, Reporting and recordkeeping requirements, Tobacco.

For the reasons set forth in the preamble, 7 CFR part 29 is amended as follows:

PART 29—TOBACCO INSPECTION

Subpart B—Regulations

1. The authority citation for Part 29, Subpart B continues to read as follows:

Authority: 7 U.S.C. 511m and 511r.

2. A new § 29.75b is added to read as follows:

§ 29.75b Display of baled flue-cured tobacco on auction warehouse floors in designated markets.

Each lot of baled flue-cured tobacco displayed for sale on auction warehouse floors shall have a minimum of 30 inches from side to side between rows with the open side of the bale facing the aisles. Distance between lots of baled tobacco within the row shall be no less than 18 inches between immediately adjacent lots.

Subpart C—Standards

3. The authority citation for Part 29, Subpart C continues to read as follows:

Authority: 7 U.S.C. 511b, 511m, and 511r.

§ 29.1059 [Amended]

4. Section 29.1059 is amended by removing the words ''and 29.)'' and adding in their place there the words ''29, and 30'').

5. Section 29.1109 is revised to read as follows:

§ 29.1109 Rule 3.

In drawing an official sample from a hogshead or other package of tobacco, three or more breaks shall be made at such points and in such manner as the inspector or sampler may find necessary to determine the kinds of tobacco and the percentage of each kind contained in the lot. All breaks shall be made so that the tobacco contained in the center of the package is visible to the sampler, except for baled tobacco that is not opened for inspection (see Rule 30). Tobacco shall be drawn from at least three breaks from which a representative sample shall be selected. The sample shall include tobacco of each different group, quality, color, length, and kind found in the lot in proportion to the quantities of each contained in the lot.

6. Section 29.1129 is revised to read as follows:

§ 29.1129 Rule 23.

Tobacco shall be designated by the grademark ''No-G,'' when it is offtype, semicured, fire-killed, smoked, oxidized over 10 percent, has an odor foreign to the type, or is packed in bales which are not approximately 42 inches wide x 42 inches high x 40 inches long.

7. A new § 29.1136 is added to read as follows:

§ 29.1136 Rule 30.

Any lot of baled tobacco that is not opened for inspection but which otherwise meets the specifications of a grade shall be graded by the exterior only.

Subpart G—Policy Statement and Regulations Governing Availability of Tobacco Inspection and Price Support Services to Flue-Cured Tobacco on Designated Markets

8. The authority citation for Part 29, Subpart G continues to read as follows:

Authority: Tobacco Inspection Act, 49 Stat. 731 (7 U.S.C. 511 *et seq.*); Commodity Credit Corporation Charter Act, 62 Stat. 1070, as amended (15 U.S.C. 714 *et seq.*); sec. 213, Pub. L. 98–180, 97 Stat. 1149 (7 U.S.C. 1421);

49 Stat. 731 (7 U.S.C. 511 *et seq.*), unless otherwise noted.

9. Section 29.9406 is amended by revising paragraghs (c)(1), (c)(2), (c)(3), and (d) to read as follows:

§ 29.9406 Failure of warehouse to comply with opening and selling schedule.

* * * * *

(c) * * *

(1) If the excess is 5,000 pounds or less of designated producer tobacco, the adjustment in producer sales opportunity shall be one pound for each pound of excess; sales in excess of 5,000 pounds shall be a violation of the sales schedule and the adjustment for the first violation shall be 5,000 pounds plus the larger of 3 pounds for each pound in excess of 5,000 pounds or 5,000 pounds; for the second violation, the adjustment shall be 5,000 pounds plus the larger of 5 pounds for each pound in excess of 5,000 or 15,000 pounds; and for the third and subsequent violations, the adjustment shall be 5,000 pounds plus the larger of 5 pounds for each pound in excess of 5,000 pounds or 50 percent of a scheduled day's sales opportunity.

(2) If the excess is 1,000 pounds or less of undesignated producer tobacco, the adjustment in producers sales opportunity is one pound for each pound of excess; if the excess is larger than 1,000 pounds, the adjustment is 1,000 pounds plus the larger of 3 pounds for each pound in excess of 1,000 or 2,000 pounds.

(3) If the excess is designated producer tobacco that is not eligible for sale at the warehouse on the day of the sale, the adjustment in producers sales opportunity for the first violation is the larger of 3 pounds for each pound in excess or 5,000 pounds, and for the second and succeeding violations, the larger of 5 pounds for each pound in excess or 10,000 pounds.

(d) If, on any sales day, a warehouse does not sell the full quantity of designated or undesignated tobacco authorized to be sold at such warehouse, the designated or undesignated sales opportunity at such warehouse on the next immediate sales day shall automatically be increased by the unsold quantity except that no such increase in sales opportunity shall exceed 5,000 pounds for designated tobacco or 500 pounds for undesignated tobacco.

Dated: July 20, 2000.

Kathleen A. Merrigan,

Administrator, Agricultural Marketing Service.

[FR Doc. 00–18963 Filed 7–26–00; 8:45 am]

BILLING CODE 3410–02–P

FARM CREDIT ADMINISTRATION

12 CFR Part 622

RIN 3052–AC01

Rules of Practice and Procedure; Adjusting Civil Money Penalties for Inflation

AGENCY: Farm Credit Administration (FCA).

ACTION: Final rule.

SUMMARY: This regulation contains cost-of-living adjustments for all civil money penalties (CMPs) under our jurisdiction. The Federal Civil Penalties Inflation Adjustment Act of 1990 requires us to adjust our CMPs at least once every 4 years for inflation to ensure that the penalties deter future violations. The new penalties are $1,170 per day for violation of an order that has become final and $580 per day for violation of the law or regulations.

EFFECTIVE DATE: The regulation will become effective on October 23, 2000.

FOR FURTHER INFORMATION CONTACT:

Mark L. Johansen, Policy Analyst, Office of Policy and Analysis, Farm Credit Administration, McLean, VA 22102–5090, (703) 883–4498, TDD (703) 883–4444,

or

Rebecca S. Orlich, Senior Attorney, Office of General Counsel, Farm Credit Administration, McLean, VA 22102–5090, (703) 883–4020, TDD (703) 883–4444.

SUPPLEMENTARY INFORMATION:

I. Objective

The objective of this regulation is to comply with Congress' mandate to adjust CMP amounts for inflation.

II. Cost-of-Living Adjustment

The Federal Civil Penalties Inflation Adjustment Act of 1990 [1] (FCPIA Act), as amended by the Debt Collection Improvement Act of 1996 (DCIA),[2] requires each agency to adjust each CMP within its jurisdiction by a prescribed cost-of-living adjustment at least once every 4 years. This cost-of-living adjustment is based on the formula described in section 5(b) of the FCPIA Act. We made our last adjustment in October 1996. Section 6 of the FCPIA Act states that any increase must apply only to violations that occur after the date the increase takes effect.

This adjustment requirement affects two provisions of section 5.32(a) [3] of the Farm Credit Act of 1971, as amended (1971 Act), which allows the FCA to impose CMPs on Farm Credit System (FCS) institutions and their related parties. Section 5.32(a) specifies that any FCS institution or any officer, director, employee, agent, or other person participating in the conduct of the affairs of an FCS institution who violates the terms of an order that has become final and was issued under section 5.25 or 5.26 of the 1971 Act must pay up to $1,000 per day for each day during which such violation continues. Orders issued under section 5.25 or 5.26 include temporary and permanent cease-and-desist orders. In addition, section 5.32(h) provides for the FCA to treat a directive issued under section 4.3(b)(2), 4.3A(e), or 4.14A(i) of the 1971 Act as a final order issued under section 5.25 for purposes of assessing a CMP. Section 5.32(a) also states that ''[a]ny such institution or person who violates any provision of the [1971] Act or any regulation issued under this [1971] Act shall forfeit and pay a civil penalty of not more than $500 per day for each day during which such violation continues.'' Since the 1996 adjustment, our regulations have required penalty levels of $1,100 and $550, respectively.

The prescribed cost-of-living adjustment formula or inflation factor is based on the difference between the Consumer Price Index (CPI) for June of the preceding year of the adjustment (June 1999) and the CPI for June of the year the CMP was last set (June 1996).[4] We used the Department of Labor, Bureau of Labor Statistics—All Urban Consumers tables, in which the period 1982–84 was equal to 100, to get the CPI numbers. In this case, the CPI value was 156.7 for June 1996 and was 166.2 for June 1999, resulting in an inflation factor of 1.06 (*i.e.*, a 6-percent increase). The prerounding adjustments are $1,166.69 from $1,100 for violations of final orders and $583.34 from $550 for violations of the 1971 Act and FCA regulations.

Section 5 of the FCPIA Act prescribes a rounding method based on the amount of the calculated increase. In our case, the applicable rounding method is to the nearest $10 for increases less than or equal to $100. Therefore, the resulting penalties are $1,170 for violations of a final order and $580 for violations of the 1971 Act and FCA regulations. The existing penalty amounts will continue to apply to violations that occurred

[1] 28 U.S.C. 2461 note.

[2] Pub. L. 104–134, sec. 31001(s), 110 Stat. 1321–373 (April 26, 1996).

[3] 12 U.S.C. 2268(a).

[4] We note that the 1996 adjustment was based on the June 1995 CPI. In calculating the new adjustments, the FCPIA Act requires us to use the 3-year period from June 1996 to June 1999.

before the effective date of this amendment.

We are also revising the language of § 622.61(a) to clarify that the final order violations include violations of a capital directive (issued under section 4.3(b)(2) or 4.3A(e) of the Farm Credit Act) or a restructuring directive (issued under section 4.14A(i)), as well as violations of cease-and-desist orders. Penalties for violations of these directives are prescribed by section 5.32(h) of the 1971 Act.

The FCPIA Act gives Federal agencies no discretion in the adjustment of CMPs for the rate of inflation, and it also requires a reassessment on at least a 4-year cycle. Moreover, this regulation is ministerial, technical, and noncontroversial. For these reasons, the FCA finds good cause to determine that public notice and an opportunity to comment are impracticable, unnecessary, and contrary to the public interest pursuant to the Administrative Procedure Act, 5 U.S.C. 553(b)(B), and adopts this rule in final form.

List of Subjects in 12 CFR Part 622

Administrative practice and procedures, Crime, Investigations, Penalties.

For the reasons stated in the preamble, part 622 of chapter VI, title 12 of the Code of Federal Regulations is amended to read as follows:

PART 622—RULES OF PRACTICE AND PROCEDURE

1. Revise the authority citation for part 622 to read as follows:

Authority: Secs. 5.9, 5.10, 5.17, 5.25–5.37 of the Farm Credit Act (12 U.S.C. 2243, 2244, 2252, 2261–2273); 28 U.S.C. 2461 note.

Subpart B—Rules and Procedures for Assessment and Collection of Civil Money Penalties

2. Revise § 622.61 to read as follows:

§ 622.61 Adjustment of civil money penalties by the rate of inflation under the Federal Civil Penalties Inflation Adjustment Act of 1990, as amended.

The maximum amount of each civil money penalty within FCA's jurisdiction is adjusted in accordance with the Federal Civil Penalties Inflation Adjustment Act of 1990, as amended (28 U.S.C. 2461 note), as follows:

(a) Amount of civil money penalty imposed under section 5.32 of the Act for violation of a final order issued under section 5.25 or 5.26 of the Act:

If the violation occurred—	The maximum daily amount is—
Before October 23, 2000	$1,100
On or After October 23, 2000 ..	1,170

(b) Amount of civil money penalty for violation of the Act or regulations:

If the violation occurred—	The maximum daily amount is—
Before October 23, 1996	$500
On or after October 23, 1996, but before October 23, 2000	550
On or After October 23, 2000 ..	580

Dated: July 21, 2000.

Kelly Mikel Williams,

Secretary, Farm Credit Administration Board.

[FR Doc. 00–18962 Filed 7–26–00; 8:45 am]

BILLING CODE 6705–01–P

DEPARTMENT OF TRANSPORTATION

Federal Aviation Administration

14 CFR Part 97

[Docket No. 30121; Amdt. No. 2002]

Standard Instrument Approach Procedures; Miscellaneous Amendments

AGENCY: Federal Aviation Administration (FAA), DOT.

ACTION: Final rule.

SUMMARY: This amendment establishes, amends, suspends, or revokes Standard Instrument Approach Procedures (SIAPs) for operations at certain airports. These regulatory actions are needed because of changes occurring in the National Airspace System, such as the commissioning of new navigational facilities, additional of new obstacles, or changes in air traffic requirements. These changes are designed to provide safe and efficient use of the navigable airspace and to promote safe flight operations under instrument flight rules at the affected airports.

DATES: An effective date for each SIAP is specified in the amendatory provisions.

Incorporation by reference-approved by the Director of the Federal Register on December 31, 1980, and reapproved as of January 1, 1982.

ADDRESSES: Availability of matter incorporated by reference in the amendment is as follows:

For Examination—

1. FAA Rules Docket, FAA Headquarters Building, 800 Independence Avenue, SW., Washington, DC 20591;

2. The FAA Regional Office of the region in which affected airport is located; or

3. The Flight Inspection Area Office which originated the SIAP.

For Purchase—Individual SIAP copies may be obtained from:

1. FAA Public Inquiry Center (APA–200), FAA Headquarters Building, 800 Independence Avenue, SW., Washington, DC 20591; or

2. The FAA Regional Office of the region in which the affected airport is located.

By Subscription—Copies of all SIAPs, mailed once every 2 weeks, are for sale by the Superintendent of Documents, U.S. Government Printing Office, Washington, DC 20402.

FOR FURTHER INFORMATION CONTACT: Donald P. Pate, Flight Procedure Standards Branch (AMCAFS–420), Flight Technologies and Programs Division, Flight Standards Service, Federal Aviation Administration, Mike Monroney Aeronautical Center, 6500 South MacArthur Blvd., Oklahoma City, OK 73169 (Mail Address: P.O. Box 25082, Oklahoma City, OK 73125) telephone: (405) 954–4164.

SUPPLEMENTARY INFORMATION: This amendment to part 97 of the Federal Aviation Regulations (14 CFR part 97) establishes, amends, suspends, or revokes Standard Instrument Approach Procedures (SIAPs). The complete regulatory description on each SIAP is contained in the appropriate FAA Form 8260 and the National Flight Data Center (FDC)/Permanent (P) Notices to Airmen (NOTAM) which are incorporated by reference in the amendment under 5 U.S.C. 552(a), 1 CFR part 51, and § 97.20 of the Federal Aviation's Regulations (FAR). Materials incorporated by reference are available for examination or purchase as stated above.

The large number of SIAPs, their complex nature, and the need for a special format make their verbatim publication in the **Federal Register** expensive and impractical. Further, airmen do not use the regulatory text of the SIAPs, but refer to their graphic depiction of charts printed by publishers of aeronautical materials. Thus, the advantages of incorporation by reference are realized and publication of the complete description of each SIAP contained in FAA form documents is unnecessary. The provisions of this amendment state the affected CFR (and FAR) sections, with the types and effective dates of the SIAPs. This amendment also identifies the airport, its location, the procedure

identification and the amendment number.

The Rule

This amendment to part 97 of the Federal Aviation Regulations (14 CFR part 97) establishes, amends, suspends, or revokes SIAPs. For safety and timeliness of change considerations, this amendment incorporates only specific changes contained in the content of the following FDC/P NOTAMs for each SIAP. The SIAP information in some previously designated FDC/Temporary (FDC/T) NOTAMs is of such duration as to be permanent. With conversion to FDC/P NOTAMs, the respective FDC/T NOTAMs have been canceled.

The FDC/P NOTAMs for the SIAPs contained in this amendment are based on the criteria contained in the U.S. Standard for Terminal Instrument Procedures (TERPS). In developing these chart changes to SIAPs by FDC/P NOTAMs, the TERPS criteria were applied to only these specific conditions existing at the affected airports. All SIAP amendments in this rule have been previously issued by the FAA in a National Flight Data Center (FDC) Notice to Airmen (NOTAM) as an emergency action of immediate flight safety relating directly to published aeronautical charts. The circumstances which created the need for all these SIAP amendments requires making them effective in less than 30 days.

Further, the SIAPs contained in this amendment are based on the criteria contained in the TERPS. Because of the close and immediate relationship between these SIAPs and safety in air commerce, I find that notice and public procedure before adopting these SIAPs are impracticable and contrary to the public interest and, where applicable, that good cause exists for making these SIAPs effective in less than 30 days.

Conclusion

The FAA has determined that this regulation only involves an established body of technical regulations for which frequent and routine amendments are necessary to keep them operationally current. It, therefore—(1) is not a ''significant regulatory action'' under Executive Order 12866; (2) is not a ''significant rule'' under DOT Regulatory Policies and Procedures (44 FR 11034; February 26, 1979); and (3) does not warrant preparation of a regulatory evaluation as the anticipated impact is so minimal. For the same reason, the FAA certifies that this amendment will not have a significant economic impact on a substantial number of small entities under the criteria of the Regulatory Flexibility Act.

List of Subjects in 14 CFR Part 97

Air Traffic Control, Airports, Navigation (Air).

Issued in Washington, DC on July 21, 2000.

L. Nicholas Lacey,

Director, Flight Standards Service.

Adoption of the Amendment

According, pursuant to the authority delegated to me, part 97 of the Federal Aviation Regulations (14 CFR part 97) is amended by establishing, amending, suspending, or revoking Standard Instrument Approach Procedures, effective at 0901 UTC on the dates specified, as follows:

PART 97—STANDARD INSTRUMENT APPROACH PROCEDURES

1. The authority citation for part 97 is revised to read as follows:

Authority: 49 U.S.C. 40103, 40113, 40120, 44701; 49 U.S.C. 106(g); and 14 CFR 11.49(b)(2).

2. Part 97 is amended to read as follows:

§§ 97.23, 97.25, 97.27, 97.29, 97.31, 97.33, and 97.35 [Amended]

By amending: § 97.23 VOR, VOR/DME, VOR or TACAN, and VOR/DME or TACAN; § 97.25 LOC, LOC/DME, LDA, LDA/DME, SDF, SDF/DME; § 97.27 NDB, NDB/DME; § 97.29 ILS, ILS/DME, ISMLS, MLS, MLS/DME, MLS/RNAV; § 97.31 RADAR SIAPs; § 97.33 RNAV SIAPs; and § 97.35 COPTER SIAPs, identified as follows:

. . . Effective Upon Publication

FDC date	State	City	Airport	FDC No.	SIAP
06/09/00	CA	Avalon	Avalon/Catalina	0/6201	VOR or GPS–A Amdt 4...
06/09/00	CA	Avalon	Avalon/Catalina	0/6202	VOR/DME or GPS–B Amdt 2...
06/09/00	CA	Sacremento	Sacramento Intl	0/6191	NDB Rwy 16L Amdt 1...
06/16/00	IA	Storm Lake	Storm Lake Muni	0/6523	NDB Rwy 35, Amdt 1A...
06/16/00	PA	Bradford	Bradford Regional	0/5160	VOR/DME or GPS Rwy 14 Amdt 8B...
07/05/00	KS	Iola	Allen County	0/7357	NDB Rwy 1, Amdt 1...
07/05/00	KS	Iola	Allen County	0/7359	GPS Rwy 19, Orig...
07/05/00	KS	Iola	Allen County	0/7360	GPS Rwy 1, Orig...
07/11/00	AK	Mountain Village	Mountain Village	0/7561	GPS Rwy 20, Orig-A...
07/11/00	AK	Mountain Village	Mountain Village	0/7562	GPS Rwy 2, Orig-A...
07/11/00	GA	Dawson	Dawson Muni	0/7566	GPS Rwy 31, Orig...
07/11/00	IL	Peoria	Greater Peoria Regional	0/7556	VOR/DME RNAV Rwy 4, Amdt 6...
07/11/00	MI	Charlevoix	Charlevoix Muni	0/7574	NDB or GPS Rwy 27, Amdt 10...
07/11/00	TX	Tyler	Tyler Pounds Field	0/7575	ILS Rwy 13, Amdt 20B...
07/12/00	GA	Dawson	Dawson Muni	0/7619	VOR/DME Rwy 31, Orig...
07/12/00	IL	Chicago	Chicago-O'Hare Intl	0/7638	ILS Rwy 22L, Amdt 4B...
07/12/00	IN	Evansville	Evansville Regional	0/7597	VOR or GPS Rwy 4, Amdt 5A...
07/12/00	LA	Jennings	Jennings	0/7639	GPS Rwy 8, Orig...
07/12/00	TN	Crossville	Crossville Memorial-Whitson Field	0/7681	ILS Rwy 26, Amdt 11B...
07/13/00	IN	Wabash	Wabash Muni	0/7704	NDB Rwy 27, Amdt 12...
07/13/00	IN	Wabash	Wabash Muni	0/7705	GPS Rwy 27, Orig...
07/13/00	KS	Fort Leavenworth	Sherman AAF	0/7717	VOR/DME–A, Orig...
07/13/00	LA	Jennings	Jennings	0/7719	VOR/DME Rwy 8, Orig...
07/13/00	TX	Abilene	Abilene Regional	0/7709	GPS Rwy 35R, Orig-B...
07/13/00	TX	Abilene	Abilene Regional	0/7710	NDB Rwy 35R Amdt 5C...
07/13/00	TX	Abilene	Abilene Regional	0/7711	ILS Rwy 35R, Amdt 6B...
07/13/00	VA	Norfolk	Norfolk Intl	0/7713	ILS Rwy 5 Amdt 24B...
07/14/00	LA	Houma	Houma-Terrebonne	0/7753	GPS Rwy 36, Orig...
07/14/00	TX	Abilene	Abilene Regional	0/7750	LOC BC Rwy 17L, Amdt 3A...

FDC date	State	City	Airport	FDC No.	SIAP
07/14/00	TX	Wichita Falls	Kickapoo Downtown Airpark	0/7731	VOR/DME RNAV or GPS Rwy 35, Amdt 3...
07/14/00	VA	Richmond/Ashland	Hanover County Muni	0/7754	NDB Rwy 16 Orig-B...
07/17/00	LA	Houma	Houma-Terrebonne	0/7854	GPS Rwy 12, Amdt 1...
07/17/00	NC	Concord	Concord Regional	0/7853	ILS Rwy 20, Orig-B...
07/18/00	CT	Windsor Locks	Bradley Intl	0/7898	HI-TACAN or VOR/DME Rwy 6 Orig...
07/18/00	CT	Windsor Locks	Bradley Intl	0/7900	VOR or TACAN Rwy 6 Orig...
07/18/00	CT	Windsor Locks	Bradley Intl	0/7901	VOR or TACAN Rwy 24 Orig...
07/18/00	NJ	Newark	Newark Intl	0/7897	VOR Rwy 11 Amdt 1B...
07/19/00	AL	Monroeville	Monroe County	0/7957	VOR or GPS Rwy 21, Amdt 8A...
07/19/00	DC	Washington	Ronald Reagan Washington National	0/7952	VOR/DME RNAV or GPS Rwy 3 Amdt 6A...
07/19/00	LA	Baton Rouge	Baton Rouge Metropolitan/Ryan Field	0/7975	ILS Rwy 22R, Amdt 9...
07/19/00	LA	Baton Rouge	Baton Rouge Metropolitan/Ryan Field	0/7977	LOC BC Rwy 4L, Amdt 6B...
07/19/00	LA	Baton Rouge	Baton Rouge Metropolitan/Ryan Field	0/7978	VOR/DME Rwy 22R, Amdt 8A...
07/19/00	LA	Baton Rouge	Baton Rouge Metropolitan/Ryan Field	0/7979	VOR or GPS Rwy 4L, Amdt 16A...
07/19/00	LA	Houma	Houma-Terrebonne	0/7947	VOR Rwy 12, Amdt 5...
07/19/00	NV	Elko	Elko	0/7941	VOR/DME or GPS–B Amdt 3...
07/19/00	VA	Richmond/Ashland	Hanover County Muni	0/7970	VOR Rwy 16 Orig-C...

[FR Doc. 00–18990 Filed 7–26–00; 8:45 am]
BILLING CODE 4910–13–M

DEPARTMENT OF TRANSPORTATION

Federal Aviation Administration

14 CFR Part 97

[Docket No. 30120; Amdt. No. 2001]

Standard Instrument Approach Procedures; Miscellaneous Amendments

AGENCY: Federal Aviation Administration (FAA), DOT.

ACTION: Final rule.

SUMMARY: This amendment establishes, amends, suspends, or revokes Standard Instrument Approach Procedures (SIAPs) for operations at certain airports. These regulatory actions are needed because of the adoption of new or revised criteria, or because of changes occurring in the National Airspace System, such as the commissioning of new navigational facilities, addition of new obstacles, or changes in air traffic requirements. These changes are designed to provide safe and efficient use of the navigable airspace and to promote safe flight operations under instrument flight rules at the affected airports.

DATES: An effective date for each SIAP is specified in the amendatory provisions.

Incorporation by reference-approved by the Director of the Federal Register on December 31, 1980, and reapproved as of January 1, 1982.

ADDRESSES: Availability of matters incorporated by reference in the amendment is as follows:

For Examination—

1. FAA Rules Docket, FAA Headquarters Building, 800 Independence Avenue, SW., Washington, DC 20591;
2. The FAA Regional Office of the region in which the affected airport is located; or
3. The Flight Inspection Area Office which originated the SIAP.

For Purchase—Individual SIAP copies may be obtained from:

1. FAA Public Inquiry Center (APA–200), FAA Headquarters Building, 800 Independence Avenue, SW., Washington, DC 20591; or
2. The FAA Regional Office of the region in which the affected airport is located.

By Subscription—Copies of all SIAPs, mailed once every 2 weeks, are for sale by the Superintendent of Documents, U.S. Government Printing Office, Washington, DC 20402.

FOR FURTHER INFORMATION CONTACT: Donald P. Pate, Flight Procedure Standards Branch (AMCAFS–420), Flight Technologies and Programs Division, Flight Standards Service, Federal Aviation Administration, Mike Monroney Aeronautical Center, 6500 South MacArthur Blvd. Oklahoma City, OK 73169 (Mail Address: P.O. Box 25082 Oklahoma City, OK 73125) telephone: (405) 954–4164.

SUPPLEMENTARY INFORMATION: This amendment to part 97 of the Federal Aviation Regulations (14 CFR part 97) establishes, amends, suspends, or revokes Standard Instrument Approach Procedures (SIAPs). The complete regulatory description of each SIAP is contained in official FAA form documents which are incorporated by reference in this amendment under 5 U.S.C. 552(a), 1 CFR part 51, and § 97.20 of the Federal Aviation Regulations (FAR). The applicable FAA Forms are identified as FAA Forms 8260–3, 8260–4, and 8260–5. Materials incorporated by reference are available for examination or purchase as stated above.

The large number of SIAPs, their complex nature, and the need for a special format make their verbatim publication in the **Federal Register** expensive and impractical. Further, airmen do not use the regulatory text of the SIAPs, but refer to their graphic depiction on charts printed by publishers of aeronautical materials. Thus, the advantages of incorporation by reference are realized and publication of the complete description of each SIAP contained in FAA form documents is unnecessary. The provisions of this amendment state the affected CFR (and FAR) sections, with the types and effective dates of the SIAPs. This amendment also identifies the airport, its location, the procedure identification and the amendment number.

The Rule

This amendment to part 97 is effective upon publication of each separate SIAP as contained in the transmittal. Some SIAP amendments may have been previously issued by the FAA in a National Flight Data Center (NFDC) Notice to Airmen (NOTAM) as an emergency action of immediate flight safety relating directly to published aeronautical charts. The circumstances which created the need for some SIAP amendments may require making them effective in less than 30 days. For the remaining SIAPs, an effective date at least 30 days after publication is provided.

Further, the SIAPs contained in this amendment are based on the criteria contained in the U.S. Standard for Terminal Instrument Procedures (TERPS). In developing these SIAPs, the TERPS criteria were applied to the conditions existing or anticipated at the affected airports. Because of the close and immediate relationship between these SIAPs and safety in air commerce, I find that notice and public procedure before adopting these SIAPs are impracticable and contrary to the public interest and, where applicable, that good cause exists for making some SIAPs effective in less than 30 days.

Conclusion

The FAA has determined that this regulation only involves an established body of technical regulations for which frequent and routine amendments are necessary to keep them operationally current. It, therefore—(1) is not a ''significant regulatory action'' under Executive Order 12866; (2) is not a ''significant rule'' under DOT Regulatory Policies and Procedures (44 FR 11034; February 26, 1979); and (3) does not warrant preparation of a regulatory evaluation as the anticipated impact is so minimal. For the same reason, the FAA certifies that this amendment will not have a significant economic impact on a substantial number of small entities under the criteria of the Regulatory Flexibility Act.

List of Subjects in 14 CFR Part 97

Air Traffic Control, Airports, Navigation (Air).

Issued in Washington, DC on July 21, 2000.

L. Nicholas Lacey,

Director, Flight Standards Service.

Adoption of the Amendment

Accordingly, pursuant to the authority delegated to me, part 97 of the Federal Aviation Regulations (14 CFR part 97) is amended by establishing, amending, suspending, or revoking Standard Instrument Approach Procedures, effective at 0901 UTC on the dates specified, as follows:

PART 97—STANDARD INSTRUMENT APPROACH PROCEDURES

1. The authority citation for part 97 is revised to read as follows:

Authority: 49 U.S.C. 106(g), 40103, 40113, 40120, 44701; and 14 CFR 11.49(b)(2).

2. Part 97 is amended to read as follows:

§§ 97.23, 97.25, 97.27, 97.29, 97.31, 97.33, and 97.35 [Amended]

By amending: § 97.23 VOR, VOR/DME, VOR or TACAN, and VOR/DME or TACAN; § 97.25 LOC, LOC/DME, LDA, LDA/DME, SDF, SDF/DME; § 97.27 NDB, NDB/DME; § 97.29 ILS, ILS/DME, ISMLS, MLS, MLS/DME, MLS/RNAV; § 97.31 RADAR SIAPs; § 97.33RNAV SIAPs; and § 97.35 COPTER SIAPs, identified as follows:

. . . Effective August 10, 2000

Hays, KS, Hays Regional, ILS RWY 34, Orig
Hays, KS, Hays Regional, LOC RWY 34, Amdt 2A, CANCELLED
Frankfort, MI, Frankfort Dow Memorial Field, RNAV RWY 15, Orig
Frankfort, MI, Frankfort, Dow Memorial Field, RNAV RWY 33, Orig
Nashville, TN, Nashville Intl, NDB RWY 2L, Amdt 7
Nashville, TN, Nashville Intl, NDB RWY 20R, Amdt 8
Nashville, TN, Nashville Intl, ILS RWY 2L, Amdt 8
Nashville, TN, Nashville Intl, ILS RWY 20R, Amdt 8

. . . Effective September 7, 2000

Muscatine, IA, Muscatine Muni, VOR RWY 6, Orig
Wichita, KS, Wichita Mid-Continent, LOC BC RWY 19L, Amdt 16
Wichita, KS, Wichita Mid-Continent, ILS RWY 1L, Amdt 3
Wichita, KS, Wichita Mid-Continent, ILS RWY 1R, Amdt 17
Wichita, KS, Wichita Mid-Continent, ILS RWY 19R, Amdt 5

. . . Effective October 5, 2000

Albertville, AL, The Albertville Muni-Thomas J. Brumlik Field, GPS RWY 5, CANCELLED
Albertville, AL, The Albertville Muni-Thomas J. Brumlik Field, GPS RWY 23, CANCELLED
Albertville, AL, The Albertville Muni-Thomas J. Brumlik Field, RNAV RWY 5, Orig
Albertville, AL, The Albertville Muni-Thomas J. Brumlik Field, RNAV RWY 23, Orig
Decatur, AL, Pryor Field Regional, VOR RWY 36, Amdt 5
Decatur, AL, Pryor Field Regional, RNAV RWY 36, Orig
Adak Island, AK, Adak NAF, RNAV RWY 23, Orig
Ambler, AK, Ambler, NDB RWY 36, Amdt 2
Ambler, AK, Ambler, RNAV RWY 36, Orig
Ambler, AK, GPS RWY 36, Orig, CANCELLED
St. George, AK, St. George, LOC/DME–A, Orig
St. George, AK, St. George, NDB/DME–A, Amdt 1
Oakland, CA, Metropolitan Oakland Intl, ILS RWY 27R, Amdt 33
Greeley, CO, Greeley-Weld County, ILS RWY 9, Amdt 3A, CANCELLED
Atlanta, GA, The William B. Hartsfield Atlanta Intl, ILS RWY 26R, Amdt 3
Las Vegas, NV, McCarran Intl, VOR/DME–A, Orig
Las Vegas, NV, McCarran Intl, VOR/DME RWY 1R, Orig-A
Las Vegas, NV, McCarran Intl, VOR RWY 25L/R, Amdt 2
Middletown, NY, Randall, VOR RWY 8, Amdt 6
Middletown, NY, Randall, NDB OR GPS–A, Orig, CANCELLED
Middletown, NY, Randall, NDB RWY 26, Orig
Montgomery, NY, Orange County, VOR RWY 8, Amdt 9
Montgomery, NY, Orange County, NDB RWY 3, Amdt 4
Montgomery, NY, Orange County, ILS RWY 3, Amdt 1
New York, NY, John F. Kennedy Intl, VOR/DME OR GPS RWY 31L, Amdt 12
New York, NY, John F. Kennedy Intl, ILS RWY 13L, Amdt 15
New York, NY, John F. Kennedy Intl, ILS RWY 22R, Amdt 1
Christiansted, VI, Henry E. Rohlsen, VOR RWY 27, Amdt 19
Christiansted, VI, Henry E. Rohlsen, NDB RWY 9, Amdt 13
Christiansted, VI, Henry E. Rohlsen, ILS RWY 9, Amdt 6
Christiansted, VI, Henry E. Rohlsen, RNAV RWY 9, Orig
Christiansted, VI, Alexander Hamilton, GPS RWY 9, Orig, CANCELLED

[FR Doc. 00–18989 Filed 7–26–00; 8:45 am]
BILLING CODE 4910–13–M

DEPARTMENT OF COMMERCE

Bureau of Export Administration

15 CFR Part 746

[Docket No. 000717209–0209–01]

RIN 0694–AC26

Reexports to Serbia of Foreign Registered Aircraft Subject to the Export Administration Regulations

AGENCY: Bureau of Export Administration, Commerce.

ACTION: Final rule.

SUMMARY: The Bureau of Export Administration (BXA) is amending the Export Administration Regulations (EAR) by reinstating provisions of License Exception AVS for temporary reexports to Serbia of foreign registered aircraft subject to the EAR. This limited action is taken in support of the European Union's six month suspension of its ban on flights to Serbia.

DATES: This rule is effective March 20, 2000.

FOR FURTHER INFORMATION CONTACT: James A. Lewis, Office of Strategic Trade and Foreign Policy Controls, Bureau of Export Administration, Telephone: (202) 482–0092.

SUPPLEMENTARY INFORMATION:

Background

The European Union has instituted a six-month suspension of its flight ban to Serbia in support of Serbia's democratic forces. In support of this suspension, the United States has taken action that will allow, under License Exception AVS, the temporary reexport to Serbia of foreign registered aircraft subject to the EAR. Foreign registered aircraft meeting all the temporary sojourn requirements of License Exception AVS may fly from foreign countries to Serbia without obtaining prior written authorization from BXA. This action is limited in scope and in no way impacts comprehensive U.S. sanctions against Serbia. Note that License Exception AVS remains unavailable to U.S. registered aircraft.

Although the Export Administration Act (EAA) expired on August 20, 1994, the President invoked the International Emergency Economic Powers Act and continued in effect the EAR, and to the extent permitted by law, the provisions of the EAA, as amended, in Executive Order 12924 of August 19, 1994, as extended by the President's notices of August 15, 1995 (60 FR 42767), August 14, 1996 (61 FR 42527) August 13, 1997 (62 FR 43629), August 13, 1998 (63 FR 44121), and August 10, 1999 (64 FR 44101).

Rule Making Requirements

1. This final rule has been determined to be non-significant for purposes of E.O. 12866.

2. Notwithstanding any other provision of law, no person is required to respond to nor be subject to a penalty for failure to comply with a collection of information subject to the requirements of the Paperwork Reduction Act unless that collection of information displays a current valid OMB Control Number. This regulation does not involve any paperwork collections.

3. This rule does not contain policies with Federalism implications sufficient to warrant preparation of a Federalism assessment under Executive Order 13132.

4. The provisions of the Administrative Procedure Act requiring notice of proposed rule making, the opportunity for public participation, and a delay in effective date, are inapplicable because this regulation involves a military or foreign affairs function of the United States (see 5 U.S.C. 553(a)(1)). Further, no other law requires that a notice of proposed rule making and an opportunity for public comment be given for this rule. Because a notice of proposed rule making and opportunities for public comment are not required to be given for this rule by 5 U.S.C. 553, or by any other law, the analytical requirements of the Regulatory Flexibility Act, 5 U.S.C. 601 *et seq.*, are inapplicable.

Therefore, this regulation is issued in final form. Although there is no formal comment period, public comments on this regulation are welcome on a continuing basis. Comments should be submitted to Kirsten Mortimer, Office of Exporter Services, Bureau of Export Administration, Department of Commerce, P.O. Box 273, Washington, D.C. 20044.

List of Subjects 15 CFR Part 746

Embargoes, Exports, Foreign trade, Reporting and recordkeeping requirements.

Accordingly, Part 746 of the Export Administration Regulations (15 CFR parts 730–774) is revised to read as follows:

1. The authority citation for 15 CFR Part 746 continues to read as follows:

Authority: 50 U.S.C. app. 2401 *et seq.*; 50 U.S.C. 1701 *et seq.*; 22 U.S.C. 287c; 22 U.S.C. 6004; E.O. 12854, 58 FR 36587, 3 CFR 1993 Comp., p. 614; E.O. 12918, 59 FR 28205, 3 CFR, 1994 Comp., p. 899; E.O. 12924, 59 FR 43437, 3 CFR, 1994 Comp., p.917; E.O. 13088, 63 FR 32109, 3 CFR, 1998 Comp., p. 191; E.O. 13121 of April 30, 1999, 64 FR 24021 (May 5, 1999); Notice of August 10, 1999, (3 CFR, 1999 Comp. 302 (2000)).

PART 746—[AMENDED]

2. Section 746.9 is amended by revising paragraph (a)(3) to read as follows:

§ 746.9 Serbia, Kosovo, and Montenegro.

* * * * *

(a) * * *

(3) *License Exceptions.* Items consigned to and for use by personnel and agencies of the U.S. Government under License Exception GOV (see § 740.11(b)(2) of the EAR) and individual gift parcels under License Exception GFT (see § 740.12(a) of the EAR) may be exported or reexported to Serbia. Temporary exports or reexports by the news media may be made to Serbia under License Exception TMP (see § 740.9(a)(2)(viii) of the EAR). Temporary reexports of foreign registered aircraft may be made to Serbia under License Exception AVS (see § 740.15(a)(4) of the EAR). No other License Exceptions are available for Serbia.

* * * * *

Eileen Albanese,

Acting Assistant Secretary for Export Administration.

[FR Doc. 00–19026 Filed 7–26–00; 8:45 am]

BILLING CODE 3510–33–P

DEPARTMENT OF THE INTERIOR

Minerals Management Service

30 CFR Part 250

RIN 1010–AC56

Producer-operated Outer Continental Shelf Pipelines That Cross Directly Into State Waters

AGENCY: Minerals Management Service (MMS), Interior.

ACTION: Final rule.

SUMMARY: This final rule will clarify some unresolved regulatory issues involving the 1996 memorandum of understanding (MOU) on Outer Continental Shelf (OCS) pipelines between the Departments of the Interior (DOI) and Transportation (DOT). It addresses producer-operated pipelines that do not connect to a transporting operator's pipeline on the OCS before crossing into State waters. It is complementary to the final rule published on August 17, 1998, which addressed producer-operated oil or gas pipelines that connect to transporting operators' pipelines on the OCS. The rule also establishes procedures for producer and transportation pipeline operators to get permission to operate under either MMS or DOT regulations governing pipeline design, construction, operation, and maintenance according to their operating circumstances.

EFFECTIVE DATE: August 28, 2000.

FOR FURTHER INFORMATION CONTACT: Carl W. Anderson, Operations Analysis Branch, at (703) 787–1608; e-mail carl.anderson@mms.gov.

SUPPLEMENTARY INFORMATION:

Background

MMS, through delegations from the Secretary of the Interior, has authority to issue and enforce rules to promote safe operations, environmental protection, and resource conservation on the OCS. (The Outer Continental Shelf Lands Act (43 U.S.C. 1331 *et seq.*) defines the OCS). Under this authority, MMS regulates pipeline transportation of

mineral production and rights-of-way for pipelines and associated facilities. MMS approves all OCS pipeline applications, regardless of whether a pipeline is built and operated under DOI or DOT regulatory requirements. MMS also has sole authority to grant rights-of-way for OCS pipelines. MMS administers the following laws as they relate to OCS pipelines:

(1) The Federal Oil and Gas Royalty Management Act of 1982 (FOGRMA), for oil and gas production measurement; and

(2) The Federal Water Pollution Control Act, as amended by the Oil Pollution Act of 1990 (OPA 90), and implemented under Executive Order (E.O.) 12777.

Nothing in this rule will affect MMS's authority under either FOGRMA or OPA 90.

The May 6, 1976, Memorandum of Understanding

Under a May 6, 1976, MOU between DOI and DOT, MMS regulated all oil and gas pipelines located upstream of the ''outlet flange'' of each facility where produced hydrocarbons were first separated, dehydrated, or otherwise processed. A result of this arrangement was that downstream (generally shoreward) of the first production platform where processing takes place, DOT-regulated pipelines crossed MMS-regulated facilities. Because of incompatible regulatory requirements, this arrangement was not satisfactory for either agency.

The December 1996, Memorandum of Understanding

In the summer of 1993, MMS and DOT's Research and Special Programs Administration (RSPA) began a new series of negotiations that resulted in the MOU of December 1996. MMS and RSPA published the 1996 MOU in a **Federal Register** notice on February 14, 1997 (62 FR 7037–7039).

Section I, ''Purpose,'' of the December 10, 1996, MOU concludes: ''This MOU puts, to the greatest extent practicable, OCS production pipelines under DOI responsibility and OCS transportation pipelines under DOT responsibility.'' Thus, MMS will have primary regulatory responsibility for producer-operated facilities and pipelines on the OCS, while RSPA will have primary regulatory responsibility for transporter-operated pipelines and associated pumping or compressor facilities. Producing operators are companies that extract and process hydrocarbons on the OCS. Transporting operators are companies that transport those hydrocarbons from the OCS. (There are about 130 designated operators of producer-operated pipelines and 75 operators of transportation pipelines on the OCS.)

The 1996 MOU redefines the DOI–DOT regulatory boundary from the OCS facility where hydrocarbons are *first* separated, dehydrated, or processed to the point at which operating responsibility for the pipeline transfers from a producing operator to a transporting operator. Although the MOU does not address the question of producer-operated pipelines that cross the Federal/State boundary without first connecting to a transportation pipeline, it states that the two departments intend to put producer-operated pipelines under DOI regulation and transporter-operated lines under DOT regulation. Moreover, the MOU includes the flexibility to cover situations that do not correspond to the general definition of the regulatory boundary as ''the point at which operating responsibility transfers from a producing operator to a transporting operator.'' Paragraph 7 under ''Joint Responsibilities'' in the MOU provides: ''DOI and DOT may, through their enforcement agencies and in consultation with the affected parties, agree to exceptions to this MOU on a facility-by-facility or area-by-area basis. Operators may also petition DOI and DOT for exceptions to this MOU.''

The Purpose of this Rule

The rule would amend 30 CFR part 250, Subpart J—Pipelines and Pipeline Rights-of-Way, § 250.1000, ''General Requirements,'' and § 250.1001, ''Definitions.'' It has three purposes:

1. To address questions about producer-operated pipelines that cross the Federal/State boundary (the ''OCS/State boundary'') without first connecting to a transporting operator's pipeline on the OCS;

2. To clarify the status of producer-operated pipelines that connect production facilities on the OCS; and

3. To set up a procedure that OCS operators can use to petition to have their pipelines regulated as either DOI or DOT facilities.

The background and rationale for this regulation was fully provided in the Notice of Proposed Rulemaking (NPR) published in the **Federal Register** on Friday, October 1, 1999 (64 FR 53298–53302).

Discussion and Analysis of Comments

MMS received three comments on the NPR. The commenters were the State of Florida, Chevron U.S.A. Production Company, and the Offshore Operator's Committee (OOC).

The State of Florida commented that they had no objection to the proposed rule. Chevron U.S.A. Production Company said that they ''fully support the efforts of the Department of the Interior in clarifying the remaining issues related to the implementation of the Memorandum of Understanding.'' They also said that Chevron participated in the development of the OOC's comments and recommendations and fully supports those comments and recommendations. The OOC's comments and our responses are provided below.

OOC recommended deletion of paragraph 250.1000(c)(9) in the proposed rule because, in their view, it is ''redundant to paragraph (c)(11).'' OOC explained:

''* * * The regulations clearly identify those pipelines based on the MOU that are subject to MMS regulations. Proposed language in 30 CFR 250.1000(c)(11) states that all pipeline segments on the OCS not subject to DOT regulations are subject to MMS regulations. DOT regulations should more appropriately classify those pipeline segments subject to its regulations or as has been customarily, those pipeline segments exempt from 49 CFR parts 192/195.''

Paragraph 250.1000(c)(9) is not entirely redundant to paragraph (c)(11); it is largely complementary to it. Paragraphs (c)(9) and (c)(11) are both necessary to eliminate confusion about jurisdictional boundaries. The purpose of paragraph (c)(9) is to recognize that there are certain producer-operated lines on the OCS that must be under DOT regulation. This is principally because of existing valve locations and the unfeasibility of isolating pipeline segments at the Federal/State boundary. Paragraph (c)(9) works in conjunction with paragraphs (c)(6) and (c)(11). Paragraph (c)(6) identifies the specific producer-operated lines covered by the new rule. Paragraph (c)(11) ensures that there are no pipeline operators on the OCS who escape regulation entirely. These three paragraphs taken together should eliminate any confusion as to which agency has regulatory responsibility in a given situation involving a producer-operated pipeline that does not connect to a transporter-operated pipeline on the OCS.

OOC recommended deletion of paragraph 250.1000(c)(10), which states that ''DOT may inspect all upstream safety equipment * * * that serve to protect the integrity of DOT-regulated pipeline segments.'' OOC states:

''Although this may be desirable by DOT, DOT requirements should not be included in MMS regulations. Since the

described upstream safety equipment is on the MMS segment, inspection, maintenance or testing will be subject to MMS inspection requirements. Any inspection that DOT may require should be in accordance with MMS regulations and not DOT.''

We do not agree with OOC. Paragraph 250.1000(c)(10) was, in fact, included in the proposed rule at DOT's request, and MMS believes that DOT was reasonable in making this request. Systems for cathodic protection, leak detection, over-pressure protection, or pigging can extend across jurisdictional boundaries. Any system set up to protect an MMS-regulated segment of a pipeline may overlap into any DOT-regulated segment that happens to connect to that line. If either DOT or MMS wishes to ensure that a system protects the line segment under its jurisdiction, there should be no question that the agency has the authority to inspect such a system. This applies regardless of whether the system conforms to DOT or MMS standards.

OOC recommends a change of wording to paragraph 250.1000(c)(13), asking that the words ''design, construction'' be deleted from the first sentence and a second sentence be added as follows: ''Any subsequent repairs or modifications will also be subject to MMS regulations governing design and construction.'' OOC explains:

''Pipelines constructed and designed in accordance with DOT regulations may not meet the MMS requirements due to differences in the regulations. Only future changes should be subject to the design and construction requirements of the MMS.''

We have accepted OOC's recommendation and have changed the paragraph accordingly. If a pipeline originally built under DOT design and construction requirements were to come under MMS regulation, it would be our policy not to require changes in pipeline design or construction until there was need for a repair or modification to the line. We would not immediately require changes in construction of the pipeline, because of the expense involved in making such changes and the potential hazards to employees making the changes. In due time, however, any pipeline will require a major repair or modification and, at that time, different design or construction criteria may be applied.

OOC requested that the words ''currently operated'' be inserted in the first paragraph defining ''DOT pipelines'' under § 250.1001, so that it reads as follows: ''*DOT pipelines* include:

''(1) Transporter-operated pipelines currently operated under DOT requirements governing design, construction, maintenance, and operation; or'' OOC explained:

''Some pipelines may have been designed and constructed to other regulations prior to becoming a 'DOT Pipeline.' This clarifies that, regardless of original design, a transporter-operated pipeline operated under DOT requirements will be called a DOT Pipeline.''

We have accepted OOC's recommendation and have changed the definition accordingly. In our own review of the definition of DOT pipelines, we noticed that we neglected to include in the definition the very class of producer-operated pipelines downstream (generally shoreward) of the last valve on the last OCS production facility that the proposed rule itself identified as DOT pipelines. Therefore, we have included these pipelines in the definition.

Procedural Matters

Regulatory Planning and Review (E.O. 12866)

This is not a significant rule under E.O. 12866 and does not require review by the Office of Management and Budget (OMB). An analysis of the rule indicates that the direct costs to industry for the entire rule total approximately $167,000 for the first year, and that for succeeding years, the maximum cost of the rule to industry in any given year would not likely exceed $53,800.

This rule will not create a serious inconsistency or otherwise interfere with an action taken or planned by another agency.

This rule does not alter the budgetary effects or entitlements, grants, user fees, or loan programs or the rights or obligations of their recipients.

This rule does not raise novel legal or policy issues.

Regulatory Flexibility Act

DOI has determined that this rule will not have a significant economic effect on a substantial number of small entities. While this rule will affect a substantial number of small entities, the economic effects of the rule will not be significant.

The regulated community for this proposal consists of 35 producer-pipeline operators in the Gulf of Mexico OCS and 8 producer-pipeline operators in the Pacific OCS. Of these operators, 15 are considered to be ''small.'' Of the small operators to be affected by the rule, almost all are represented by Standard Industrial Classification code 1311 (crude petroleum and natural gas producers).

DOI's analysis of the economic impacts indicates that direct costs to industry for the entire rule total approximately $167,000 for the first year, and in succeeding years, the maximum cost of the rule to industry in any given year would not likely exceed $53,800.

These annual costs would not persist for long, because all pipelines converted to MMS regulation eventually would come into compliance with MMS safety valve requirements. There are up to 150 designated operators of leases and 75 operators of transportation pipelines on the OCS (both large and small operators), and the economic impacts on the oil and gas production and transportation companies directly affected will be minor. Not all operators affected will be small businesses, but much of their modification costs may be paid to offshore service contractors who may be classified as small businesses. Perhaps two or three operators may eventually be required to install new automatic shutdown valves as a result of transferring under MMS regulations. These few operators will sustain the greatest economic impact from this rule.

To the extent that this rule might eventually cause some of the relatively larger OCS operators to make modifications to their pipelines, it may have a minor beneficial effect of increasing demand for the services and equipment of smaller service companies and manufacturers. This rule will not impose any new restrictions on small pipeline service companies or manufacturers, nor will it cause their business practices to change.

Your comments are important. The Small Business and Agriculture Regulatory Enforcement Ombudsman and 10 Regional Fairness boards were established to receive comments from small business about Federal agency enforcement actions. The Ombudsman will annually evaluate the enforcement activities and rate each agency's responsiveness to small business. If you wish to comment on the enforcement actions of MMS, call toll-free (888) 734–3247.

Small Business Regulatory Enforcement Fairness Act (SBREFA)

This rule is not a major rule under 5 U.S.C. 804(2), the SBREFA. Based on our economic analysis, this rule:

a. This rule does not have an annual effect on the economy of $100 million or more. As indicated in our cost analysis, direct costs to industry for the entire proposed rule total approximately

$167,000 for the first year. In succeeding years, the cost of the rule to industry would not likely exceed $53,800 in any given year. The proposed rule will have a minor economic effect on the offshore oil and gas and transmission pipeline industries.

b. This rule will not cause a major increase in costs or prices for consumers, individual industries, Federal, State, or local government agencies, or geographic regions.

c. This rule does not have significant adverse effects on competition, employment, investment, productivity, innovation, or the ability of U.S.-based enterprises to compete with foreign-based enterprises.

Unfunded Mandates Reform Act (UMRA) of 1995

This rule does not contain any unfunded mandates to State, local, or tribal governments, nor would it impose significant regulatory costs on the private sector. Anticipated costs to the private sector will be far below the $100 million threshold for any year that was established by UMRA.

Takings (E.O. 12630)

DOI certifies that this rule does not represent a governmental action capable of interference with constitutionally protected property rights.

Federalism (E.O. 13132)

According to E.O. 13132, the rule does not have significant Federalism implications. The rule does not substantially and directly affect the relationship between the Federal and State Government. The rule merely establishes jurisdictional boundaries with DOT and will not impose costs on States or localities.

Civil Justice Reform (E.O. 12988)

DOI has certified to OMB that this regulation meets the applicable civil justice reform standards provided in sections 3(a) and 3(b)(2) of E.O. 12988.

Paperwork Reduction Act (PRA) of 1995

As part of the NPR process, OMB approved the proposed collection of information under the PRA (44 U.S.C. 3501 *et seq.*) and assigned OMB control number (1010–0134). MMS did not receive any comments on the information collection aspects in the NPR. The final rule does not change any of the information collection requirements. The PRA provides that an agency may not conduct or sponsor, and a person is not required to respond to, a collection of information unless it displays a current valid OMB control number.

The collection of information for this rule consists of:

(1) In paragraph 250.1000(c)(8), operators may request that MMS recognize valves landward of the last production facility but still located on the OCS as the point where MMS regulatory authority begins. We estimate one or two such request(s) at most each year with an estimated burden of ½ hour per request for a total annual burden of 1 hour.

(2) In paragraph 250.1000(c)(12), producing operators operating pipelines under DOT regulatory authority may petition MMS to continue to operate under DOT upstream of the last valve on the last production facility. In the first year, nearly all producer-pipeline operators would decide whether to automatically convert to DOI regulation or apply to remain under DOT regulation. We estimate that not more than 10 one-time requests to remain under DOT regulation, with an estimated average burden of 40 hours per request. Annualized over a 3-year period, this would result in 135 annual burden hours. We anticipate that in following years, not more than two operators a year would petition to change their regulatory status.

(3) In paragraph 250.1000(c)(13), transportation pipeline operators operating pipelines under DOT regulatory authority may also petition the Office of Pipeline Safety (OPS) and MMS to operate under MMS regulations governing pipeline design, construction, operation, and maintenance. Although we have allowed for this possibility in the final rule, we expect these would be rare. We estimate the burden would be 40 hours per request.

The total public reporting burden for this information collection requirement is estimated to be 176 annual burden hours. This includes the time for reviewing instructions, searching existing data sources, and gathering the data. The proposed rule requires no recordkeeping burdens. At $35 per hour, the annual paperwork ''hour'' burden would be $6,160.

The requirement to respond is mandatory in some cases and required to obtain or retain a benefit in others. MMS uses the information to determine the demarcation where pipelines are subject to MMS design, construction, operation, and maintenance requirements, as distinguished from similar OPS requirements.

Converting to DOI regulation could also result in the installation of as many as three automatic shutdown valves, either in the first year or in subsequent years. In these instances, operators would be subject to the regulatory and paperwork requirements in 30 CFR part 250, subpart J, on Pipelines and Pipeline Rights-of-Way. The information collection requirements in this subpart have already been approved by OMB under OMB control number 1010–0050.

National Environmental Policy Act

Under 516 DM 6, Appendix 10.4, ''issuance and/or modification of regulations'' is considered a categorically excluded action causing no significant effects on the environment and, therefore, does not require preparation of an environmental assessment or impact statement. DOI completed a Categorical Exclusion Review (CER) for this action on March 26, 1999, and concluded: ''The proposed rulemaking does not represent an exception to the established criteria for categorical exclusion. Therefore, preparation of an environmental document will not be required, and further documentation of this CER is not required.''

List of Subjects in 30 CFR Part 250

Continental shelf, Environmental impact statements, Environmental protection, Government contracts, Incorporation by reference, Investigations, Mineral royalties, Oil and gas development and production, Oil and gas exploration, Oil and gas reserves, Penalties, Pipelines, Public lands—mineral resources, Public lands—rights-of-way, Reporting and recordkeeping requirements, Sulphur development and production, Sulphur exploration, Surety bonds.

Dated: July 14, 2000.

Sylvia V. Baca,

Assistant Secretary, Land and Minerals Management.

For the reasons stated in the preamble, MMS amends 30 CFR part 250 as follows:

PART 250—OIL AND GAS AND SULPHUR OPERATIONS IN THE OUTER CONTINENTAL SHELF

1. The authority citation for part 250 continues to read as follows:

Authority: 43 U.S.C. 1331, *et seq.*

2. In § 250.1000, paragraphs (c)(6) through (c)(13) are added as follows:

§ 250.1000 General requirements.

* * * * *

(c) * * *

(6) Any producer operating a pipeline that crosses into State waters without first connecting to a transporting operator's facility on the OCS must comply with this subpart. Compliance must extend from the point where

hydrocarbons are first produced, through and including the last valve and associated safety equipment (*e.g.,* pressure safety sensors) on the last production facility on the OCS.

(7) Any producer operating a pipeline that connects facilities on the OCS must comply with this subpart.

(8) Any operator of a pipeline that has a valve on the OCS downstream (landward) of the last production facility may ask in writing that the MMS Regional Supervisor recognize that valve as the last point MMS will exercise its regulatory authority.

(9) A pipeline segment is not subject to MMS regulations for design, construction, operation, and maintenance if:

(i) It is downstream (generally shoreward) of the last valve and associated safety equipment on the last production facility on the OCS; and

(ii) It is subject to regulation under 49 CFR parts 192 and 195.

(10) DOT may inspect all upstream safety equipment (including valves, over-pressure protection devices, cathodic protection equipment, and pigging devices, etc.) that serve to protect the integrity of DOT-regulated pipeline segments.

(11) OCS pipeline segments not subject to DOT regulation under 49 CFR parts 192 and 195 are subject to all MMS regulations.

(12) A producer may request that its pipeline operate under DOT regulations governing pipeline design, construction, operation, and maintenance.

(i) The operator's request must be in the form of a written petition to the MMS Regional Supervisor that states the justification for the pipeline to operate under DOT regulation.

(ii) The Regional Supervisor will decide, on a case-by-case basis, whether to grant the operator's request. In considering each petition, the Regional Supervisor will consult with the Office of Pipeline Safety (OPS) Regional Director.

(13) A transporter who operates a pipeline regulated by DOT may request to operate under MMS regulations governing pipeline operation and maintenance. Any subsequent repairs or modifications will also be subject to MMS regulations governing design and construction.

(i) The operator's request must be in the form of a written petition to the OPS Regional Director and the MMS Regional Supervisor.

(ii) The MMS Regional Supervisor and the OPS Regional Director will decide how to act on this petition.

* * * * *

3. In § 250.1001, the definition for the term ''DOI pipelines'' is revised and the definitions for the terms ''DOT pipelines,'' and ''production facility'' are added in alphabetical order as follows:

§ 250.1001 Definitions.

* * * * *

DOI pipelines include:

(1) Producer-operated pipelines extending upstream (generally seaward) from each point on the OCS at which operating responsibility transfers from a producing operator to a transporting operator;

(2) Producer-operated pipelines extending upstream (generally seaward) of the last valve (including associated safety equipment) on the last production facility on the OCS that do not connect to a transporter-operated pipeline on the OCS before crossing into State waters;

(3) Producer-operated pipelines connecting production facilities on the OCS;

(4) Transporter-operated pipelines that DOI and DOT have agreed are to be regulated as DOI pipelines; and

(5) All OCS pipelines not subject to regulation under 49 CFR parts 192 and 195.

DOT pipelines include:

(1) Transporter-operated pipelines currently operated under DOT requirements governing design, construction, maintenance, and operation;

(2) Producer-operated pipelines that DOI and DOT have agreed are to be regulated under DOT requirements governing design, construction, maintenance, and operation; and

(3) Producer-operated pipelines downstream (generally shoreward) of the last valve (including associated safety equipment) on the last production facility on the OCS that do not connect to a transporter-operated pipeline on the OCS before crossing into State waters and that are regulated under 49 CFR parts 192 and 195.

* * * * *

Production facilities means OCS facilities that receive hydrocarbon production either directly from wells or from other facilities that produce hydrocarbons from wells. They may include processing equipment for treating the production or separating it into its various liquid and gaseous components before transporting it to shore.

* * * * *

[FR Doc. 00–18802 Filed 7–26–00; 8:45 am]

BILLING CODE 4310–MR–U

ENVIRONMENTAL PROTECTION AGENCY

40 CFR Part 300

[FRL–6841–3]

National Priorities List for Uncontrolled Hazardous Waste Sites

AGENCY: Environmental Protection Agency.

ACTION: Final rule.

SUMMARY: The Comprehensive Environmental Response, Compensation, and Liability Act of 1980 (''CERCLA'' or ''the Act''), as amended, requires that the National Oil and Hazardous Substances Pollution Contingency Plan (''NCP'') include a list of national priorities among the known releases or threatened releases of hazardous substances, pollutants, or contaminants throughout the United States. The National Priorities List (''NPL'') constitutes this list. The NPL is intended primarily to guide the Environmental Protection Agency (''EPA'' or ''the Agency'') in determining which sites warrant further investigation to assess the nature and extent of public health and environmental risks associated with the site and to determine what CERCLA-financed remedial action(s), if any, may be appropriate. This rule adds 12 new sites to the NPL; 11 sites to the General Superfund Section of the NPL and one site to the Federal Facilities Section.

EFFECTIVE DATE: The effective date for this amendment to the NCP shall be August 28, 2000.

ADDRESSES: For addresses for the Headquarters and Regional dockets, as well as further details on what these dockets contain, see Section II, ''Availability of Information to the Public'' in the ''Supplementary Information'' portion of this preamble.

FOR FURTHER INFORMATION CONTACT: Yolanda Singer, phone (703) 603–8835, State, Tribal and Site Identification Center; Office of Emergency and Remedial Response (mail code 5204G); U.S. Environmental Protection Agency; 1200 Pennsylvania Avenue NW; Washington, DC 20460; or the Superfund Hotline, phone (800) 424–9346 or (703) 412–9810 in the Washington, DC, metropolitan area.

SUPPLEMENTARY INFORMATION:

Table of Contents

I. Background
A. What are CERCLA and SARA?
B. What is the NCP?
C. What is the National Priorities List (NPL)?
D. How are Sites Listed on the NPL?
E. What Happens to Sites on the NPL?

F. How are Site Boundaries Defined?
G. How are Sites Removed from the NPL?
H. Can Portions of Sites be Deleted from the NPL as They Are Cleaned Up?
I. What is the Construction Completion List (CCL)?
II. Availability of Information to the Public
A. Can I Review the Documents Relevant to this Final Rule?
B. What Documents are Available for Review at the Headquarters Docket?
C. What Documents are Available for Review at the Regional Docket?
D. How Do I Access the Documents?
E. How Can I Obtain a Current List of NPL Sites?
III. Contents of This Final Rule
A. Additions to the NPL
B. Status of NPL
C. What did EPA Do with the Public Comments It Received?
IV. Executive Order 12866
A. What is Executive Order 12866?
B. Is this Final Rule Subject to Executive Order 12866 Review?
V. Unfunded Mandates
A. What is the Unfunded Mandates Reform Act (UMRA)?
B. Does UMRA Apply to This Final Rule?
VI. Effects on Small Businesses
A. What is the Regulatory Flexibility Act?
B. Does the Regulatory Flexibility Act Apply to this Final Rule?
VII. Possible Changes to the Effective Date of the Rule
A. Has This Rule Been Submitted to Congress and the General Accounting Office?
B. Could the Effective Date of This Final Rule Change?
C. What Could Cause the Effective Date of This Rule to Change?
VIII. National Technology Transfer and Advancement Act
A. What is the National Technology Transfer and Advancement Act?
B. Does the National Technology Transfer and Advancement Act Apply to this Final Rule?
IX. Executive Order 12898
A. What is Executive Order 12898?
B. Does Executive Order 12898 Apply to This Final Rule?
X. Executive Order 13045
A. What is Executive Order 13045?
B. Does Executive Order 13045 Apply to This Final Rule?
XI. Paperwork Reduction Act
A. What is the Paperwork Reduction Act?
B. Does the Paperwork Reduction Act Apply to This Final Rule?
XII. Executive Orders on Federalism
What Are The Executive Orders on Federalism and Are They Applicable to This Final Rule?
XIII. Executive Order 13084
What is Executive Order 13084 and is it Applicable to this Final Rule?

I. Background

A. What Are CERCLA and SARA?

In 1980, Congress enacted the Comprehensive Environmental Response, Compensation, and Liability Act, 42 U.S.C. 9601–9675 (''CERCLA'' or ''the Act''), in response to the dangers of uncontrolled releases of hazardous substances. CERCLA was amended on October 17, 1986, by the Superfund Amendments and Reauthorization Act (''SARA''), Public Law 99–499, 100 Stat. 1613 *et seq.*

B. What Is the NCP?

To implement CERCLA, EPA promulgated the revised National Oil and Hazardous Substances Pollution Contingency Plan (''NCP''), 40 CFR part 300, on July 16, 1982 (47 FR 31180), pursuant to CERCLA section 105 and Executive Order 12316 (46 FR 42237, August 20, 1981). The NCP sets guidelines and procedures for responding to releases and threatened releases of hazardous substances, pollutants, or contaminants under CERCLA. EPA has revised the NCP on several occasions. The most recent comprehensive revision was on March 8, 1990 (55 FR 8666).

As required under section 105(a)(8)(A) of CERCLA, the NCP also includes ''criteria for determining priorities among releases or threatened releases throughout the United States for the purpose of taking remedial action and, to the extent practicable, taking into account the potential urgency of such action for the purpose of taking removal action.'' (''Removal'' actions are defined broadly and include a wide range of actions taken to study, clean up, prevent or otherwise address releases and threatened releases 42 U.S.C. 9601(23).)

C. What Is the National Priorities List (NPL)?

The NPL is a list of national priorities among the known or threatened releases of hazardous substances, pollutants, or contaminants throughout the United States. The list, which is appendix B of the NCP (40 CFR part 300), was required under section 105(a)(8)(B) of CERCLA, as amended by SARA. Section 105(a)(8)(B) defines the NPL as a list of ''releases'' and the highest priority ''facilities'' and requires that the NPL be revised at least annually. The NPL is intended primarily to guide EPA in determining which sites warrant further investigation to assess the nature and extent of public health and environmental risks associated with a release of hazardous substances. The NPL is only of limited significance, however, as it does not assign liability to any party or to the owner of any specific property. Neither does placing a site on the NPL mean that any remedial or removal action necessarily need be taken.

For purposes of listing, the NPL includes two sections, one of sites that are generally evaluated and cleaned up by EPA (the ''General Superfund Section''), and one of sites that are owned or operated by other Federal agencies (the ''Federal Facilities Section''). With respect to sites in the Federal Facilities Section, these sites are generally being addressed by other Federal agencies. Under Executive Order 12580 (52 FR 2923, January 29, 1987) and CERCLA section 120, each Federal agency is responsible for carrying out most response actions at facilities under its own jurisdiction, custody, or control, although EPA is responsible for preparing an HRS score and determining whether the facility is placed on the NPL. EPA generally is not the lead agency at Federal Facilities Section sites, and its role at such sites is accordingly less extensive than at other sites.

D. How Are Sites Listed on the NPL?

There are three mechanisms for placing sites on the NPL for possible remedial action (see 40 CFR 300.425(c) of the NCP): (1) A site may be included on the NPL if it scores sufficiently high on the Hazard Ranking System (''HRS''), which EPA promulgated as appendix A of the NCP (40 CFR part 300). The HRS serves as a screening device to evaluate the relative potential of uncontrolled hazardous substances to pose a threat to human health or the environment. On December 14, 1990 (55 FR 51532), EPA promulgated revisions to the HRS partly in response to CERCLA section 105(c), added by SARA. The revised HRS evaluates four pathways: ground water, surface water, soil exposure, and air. As a matter of Agency policy, those sites that score 28.50 or greater on the HRS are eligible for the NPL; (2) Each State may designate a single site as its top priority to be listed on the NPL, regardless of the HRS score. This mechanism, provided by the NCP at 40 CFR 300.425(c)(2) requires that, to the extent practicable, the NPL include within the 100 highest priorities, one facility designated by each State representing the greatest danger to public health, welfare, or the environment among known facilities in the State (see 42 U.S.C. 9605(a)(8)(B)); (3) The third mechanism for listing, included in the NCP at 40 CFR 300.425(c)(3), allows certain sites to be listed regardless of their HRS score, if all of the following conditions are met:

- The Agency for Toxic Substances and Disease Registry (ATSDR) of the U.S. Public Health Service has issued a health advisory that recommends

dissociation of individuals from the release.

- EPA determines that the release poses a significant threat to public health.
- EPA anticipates that it will be more cost-effective to use its remedial authority than to use its removal authority to respond to the release.

EPA promulgated an original NPL of 406 sites on September 8, 1983 (48 FR 40658). The NPL has been expanded since then, most recently on May 11, 2000 (65 FR 30482).

E. What Happens to Sites on the NPL?

A site may undergo remedial action financed by the Trust Fund established under CERCLA (commonly referred to as the ''Superfund'') only after it is placed on the NPL, as provided in the NCP at 40 CFR 300.425(b)(1). (''Remedial actions'' are those ''consistent with permanent remedy, taken instead of or in addition to removal actions * * *.'' 42 U.S.C. 9601(24).) However, under 40 CFR 300.425(b)(2) placing a site on the NPL ''does not imply that monies will be expended.'' EPA may pursue other appropriate authorities to respond to the releases, including enforcement action under CERCLA and other laws.

F. How Are Site Boundaries Defined?

The NPL does not describe releases in precise geographical terms; it would be neither feasible nor consistent with the limited purpose of the NPL (to identify releases that are priorities for further evaluation), for it to do so.

Although a CERCLA ''facility'' is broadly defined to include any area where a hazardous substance release has ''come to be located'' (CERCLA section 101(9)), the listing process itself is not intended to define or reflect the boundaries of such facilities or releases. Of course, HRS data (if the HRS is used to list a site) upon which the NPL placement was based will, to some extent, describe the release(s) at issue. That is, the NPL site would include all releases evaluated as part of that HRS analysis.

When a site is listed, the approach generally used to describe the relevant release(s) is to delineate a geographical area (usually the area within an installation or plant boundaries) and identify the site by reference to that area. As a legal matter, the site is not coextensive with that area, and the boundaries of the installation or plant are not the ''boundaries'' of the site. Rather, the site consists of all contaminated areas within the area used to identify the site, as well as any other location to which that contamination has come to be located, or from which that contamination came.

In other words, while geographic terms are often used to designate the site (e.g., the ''Jones Co. plant site'') in terms of the property owned by a particular party, the site properly understood is not limited to that property (*e.g.,* it may extend beyond the property due to contaminant migration), and conversely may not occupy the full extent of the property (*e.g.,* where there are uncontaminated parts of the identified property, they may not be, strictly speaking, part of the ''site''). The ''site'' is thus neither equal to nor confined by the boundaries of any specific property that may give the site its name, and the name itself should not be read to imply that this site is coextensive with the entire area within the property boundary of the installation or plant. The precise nature and extent of the site are typically not known at the time of listing. Also, the site name is merely used to help identify the geographic location of the contamination. For example, the name ''Jones Co. plant site,'' does not imply that the Jones company is responsible for the contamination located on the plant site.

EPA regulations provide that the ''nature and extent of the problem presented by the release'' will be determined by a remedial investigation/feasibility study (RI/FS) as more information is developed on site contamination (40 CFR 300.5). During the RI/FS process, the release may be found to be larger or smaller than was originally thought, as more is learned about the source(s) and the migration of the contamination. However, this inquiry focuses on an evaluation of the threat posed; the boundaries of the release need not be exactly defined. Moreover, it generally is impossible to discover the full extent of where the contamination ''has come to be located'' before all necessary studies and remedial work are completed at a site. Indeed, the known boundaries of the contamination can be expected to change over time. Thus, in most cases, it may be impossible to describe the boundaries of a release with absolute certainty.

Further, as noted above, NPL listing does not assign liability to any party or to the owner of any specific property. Thus, if a party does not believe it is liable for releases on discrete parcels of property, supporting information can be submitted to the Agency at any time after a party receives notice it is a potentially responsible party.

For these reasons, the NPL need not be amended as further research reveals more information about the location of the contamination or release.

G. How Are Sites Removed From the NPL?

EPA may delete sites from the NPL where no further response is appropriate under Superfund, as explained in the NCP at 40 CFR 300.425(e). This section also provides that EPA shall consult with states on proposed deletions and shall consider whether any of the following criteria have been met:

(i) Responsible parties or other persons have implemented all appropriate response actions required;

(ii) All appropriate Superfund-financed response has been implemented and no further response action is required; or

(iii) The remedial investigation has shown the release poses no significant threat to public health or the environment, and taking of remedial measures is not appropriate.

As of July 10, 2000, the Agency has deleted 213 sites from the NPL.

H. Can Portions of Sites be Deleted From the NPL as They Are Cleaned Up?

In November 1995, EPA initiated a new policy to delete portions of NPL sites where cleanup is complete (60 FR 55465, November 1, 1995). Total site cleanup may take many years, while portions of the site may have been cleaned up and available for productive use. As of July 10, 2000, EPA has deleted portions of 19 sites.

I. What Is the Construction Completion List (CCL)?

EPA also has developed an NPL construction completion list (''CCL'') to simplify its system of categorizing sites and to better communicate the successful completion of cleanup activities (58 FR 12142, March 2, 1993). Inclusion of a site on the CCL has no legal significance.

Sites qualify for the CCL when: (1) Any necessary physical construction is complete, whether or not final cleanup levels or other requirements have been achieved; (2) EPA has determined that the response action should be limited to measures that do not involve construction (*e.g.,* institutional controls); or (3) the site qualifies for deletion from the NPL.

Of the 213 sites that have been deleted from the NPL, 203 sites were deleted because they have been cleaned up (the other 10 sites were deleted based on deferral to other authorities and are not considered cleaned up). As of July 10, 2000, there are a total of 689 sites on the CCL. This total includes the

213 deleted sites. For the most up-to-date information on the CCL, see EPA's Internet site at http://www.epa.gov/superfund.

II. Availability of Information to the Public

A. Can I Review the Documents Relevant to This Final Rule?

Yes, documents relating to the evaluation and scoring of the sites in this final rule are contained in dockets located both at EPA Headquarters and in the Regional offices.

B. What Documents Are Available for Review at the Headquarters Docket?

The Headquarters docket for this rule contains, for each site, the HRS score sheets, the Documentation Record describing the information used to compute the score, pertinent information regarding statutory requirements or EPA listing policies that affect the site, and a list of documents referenced in the Documentation Record. The Headquarters docket also contains comments received, and the Agency's responses to those comments. The Agency's responses are contained in the ''Support Document for the Revised National Priorities List Final Rule—July 2000.''

C. What Documents Are Available for Review at the Regional Dockets?

The Regional dockets contain all the information in the Headquarters docket, plus the actual reference documents containing the data principally relied upon by EPA in calculating or evaluating the HRS score for the sites located in their Region. These reference documents are available only in the Regional dockets.

D. How Do I Access the Documents?

You may view the documents, by appointment only, after the publication of this document. The hours of operation for the Headquarters docket are from 9 a.m. to 4 p.m., Monday through Friday, excluding Federal holidays. Please contact the Regional dockets for hours.

Following is the contact information for the EPA Headquarters: Docket Coordinator, Headquarters, U.S. EPA CERCLA Docket Office, Crystal Gateway #1, 1st Floor, 1235 Jefferson Davis Highway, Arlington, VA, 703/603–8917.

The contact information for the Regional dockets is as follows:

Barbara Callahan, Region 1 (CT, ME, MA, NH, RI, VT), U.S. EPA, Records Center, Mailcode HSC, One Congress Street, Suite 1100, Boston, MA 02114–2023; 617/918–1356

Ben Conetta, Region 2 (NJ, NY, PR, VI), U.S. EPA, 290 Broadway, New York, NY 10007–1866; 212/637–4435

Dawn Shellenberger (GCI), Region 3 (DE, DC, MD, PA, VA, WV), U.S. EPA, Library, 1650 Arch Street, Mailcode 3PM52, Philadelphia, PA 19103; 215/814–5364

Joellen O'Neill, Region 4 (AL, FL, GA, KY, MS, NC, SC, TN), U.S. EPA, 61 Forsyth Street, SW, 9th floor, Atlanta, GA 30303; 404/562–8127

Region 5 (IL, IN, MI, MN, OH, WI), U.S. EPA, Records Center, Waste Management Division 7–J, Metcalfe Federal Building, 77 West Jackson Boulevard, Chicago, IL 60604; 312/886–7570

Brenda Cook, Region 6 (AR, LA, NM, OK, TX), U.S. EPA, 1445 Ross Avenue, Mailcode 6SF–RA, Dallas, TX 75202–2733; 214/665–7436

Carole Long, Region 7 (IA, KS, MO, NE), U.S. EPA, 901 North 5th Street, Kansas City, KS 66101; 913/551–7224

David Williams, Region 8 (CO, MT, ND, SD, UT, WY), U.S. EPA, 999 18th Street, Suite 500, Mailcode 8EPR–SA, Denver, CO 80202–2466; 303/312–6757

Carolyn Douglas, Region 9 (AZ, CA, HI, NV, AS, GU), U.S. EPA, 75 Hawthorne Street, San Francisco, CA 94105; 415/744–2343

Robert Phillips, Region 10 (AK, ID, OR, WA), U.S. EPA, 11th Floor, 1200 6th Avenue, Mail Stop ECL–115, Seattle, WA 98101; 206/553–6699

E. How Can I Obtain a Current List of NPL Sites?

You may obtain a current list of NPL sites via the Internet at http://www.epa.gov/superfund/ (look under site information category) or by contacting the Superfund Docket (see contact information above).

III. Contents of This Final Rule

A. Addition to the NPL

This final rule adds 12 sites to the NPL; 11 sites to the General Superfund Section of the NPL and one site to the Federal Facilities Section. Table 1 presents the 11 sites in the General Superfund Section and Table 2 presents the site in the Federal Facilities Section. Sites in the table are arranged alphabetically by State.

TABLE 1.—NATIONAL PRIORITIES LIST FINAL RULE, GENERAL SUPERFUND SECTION

State	Site name	City/county
CT	Scovill Industrial Landfill	Waterbury.
FL	Southern Solvents, Inc.	Tampa.
LA	Mallard Bay Landing Bulk Plant	Grand Cheniere.
MO	Newton County Wells	Newton County.
MS	Davis Timber Company	Hattiesburg.
OK	Imperial Refining Company	Ardmore.
TX	Palmer Barge Line	Port Arthur.
TX	Star Lake Canal	Port Neches.
UT	International Smelting and Refining	Tooele.
WA	Hamilton/Labree Roads Ground Water Contamination	Chehalis.
WV	Big John Salvage—Hoult Road	Fairmont.

Number of Sites Added to the General Superfund Section: 11.

TABLE 2.—NATIONAL PRIORITIES LIST FINAL RULE, FEDERAL FACILITIES SECTION

State	Site name	City/county
VA	St. Juliens Creek Annex (U.S. Navy)	Chesapeake.

Number of Sites Added to the Federal Facilities Section: 1.

B. Status of NPL

With the 12 new sites added to the NPL in today's final rule; the NPL now contains 1,238 final sites; 1,078 in the General Superfund Section and 160 in the Federal Facilities Section. With a separate rule (published elsewhere in today's **Federal Register**) proposing to add 7 new sites to the NPL, there are now 57 sites proposed and awaiting final agency action, 51 in the General Superfund Section and 6 in the Federal Facilities Section. Final and proposed sites now total 1,295. (These numbers reflect the status of sites as of July 10, 2000. Site deletions occurring after this date may affect these numbers at time of publication in the **Federal Register**.)

C. What Did EPA Do With the Public Comments It Received?

EPA reviewed all comments received on the sites in this rule. The Newton County Wells site was proposed on January 19, 1999 (64 FR 2950). The International Smelting and Refining site was proposed on April 23, 1999 (64 FR 19968). The Star Lake Canal site was proposed on July 22, 1999 (64 FR 39886). The Big John Salvage site and the St. Juliens Creek Annex site were both proposed on February 4, 2000 (65 FR 5468). The following sites were proposed on May 11, 2000 (65 FR 30489): Scovill Industrial Landfill, Southern Solvents, Inc., Mallard Bay Landing Bulk Plant (proposed under the name Talen's Landing Bulk Plant), Davis Timber Company, Imperial Refining Company, Palmer Barge Line, and Hamilton/Labree Roads Ground Water Contamination.

For the Scovill Industrial Landfill and Imperial Refining Company sites, EPA received only comments in favor of placing the sites on the NPL. EPA received no comments on the actual scoring of these sites and the Agency has identified no other reason to change the original HRS scores for the sites. Therefore, EPA is placing both sites on the NPL at this time.

For, Southern Solvents, Inc., Davis Timber Company, and Hamilton/Labree Roads Ground Water Contamination, EPA received no comments affecting the HRS scoring of these sites and therefore, EPA is placing them on the final NPL at this time.

EPA received one comment on the Palmer Barge Line site in Port Arthur, Texas. The commenter stated that his family business occupies the North Eastern 10 acres at the Palmer Barge Line location. The commenter stated that he hoped that EPA would not interrupt his company's work. In response, CERCLA Section 105(a)(8)(A) specifies the criteria for listing sites but does not require that the Agency consider possible adverse economic impacts as a factor; accordingly the listing process does not use that as a factor in identifying sites for the NPL. Furthermore, including a site on the NPL does not cause EPA necessarily to undertake remedial action. Any Agency actions that may result in response actions are based on discretionary decisions and are made on a case-by-case basis. Remedial response actions are associated with events that generally *follow* listing a site, not with the listing itself. EPA has not made a decision on what, if any, action may be needed at the Palmer Barge Line site, but if remediation is necessary, the Agency will seek to minimize any disruption of local businesses to the extent possible. Since this comment does not affect the HRS score of this site, EPA is placing it on the final NPL at this time.

EPA received one comment on the Talen's Landing Bulk Plant site in Grand Cheniere, Louisiana. The commenter asked that EPA change the name of the Talen's Landing Bulk Plant site. In response, to more accurately identify the site, EPA is changing the name of the site to ''Mallard Bay Landing Bulk Plant''. The commenter requested a public statement concerning his client's interest or involvement with the site. EPA is unable to comply with this request. This comment is beyond the scope of this rulemaking and does not affect the HRS site score. The NPL serves primarily as an informational list. Placing a site on the NPL reflects EPA's judgment that a significant release or threat of release of a hazardous substance has occurred, and that the site is a priority for further investigation under CERCLA. Placing a site on the NPL is not a determination of liability, nor does listing cause EPA necessarily to undertake remedial action, or to require any action by a private party, or to assign liability for site response costs to a private party. Any Agency actions that may result in response actions are based on discretionary decisions and are made on a case-by-case basis. Remedial response actions are associated with events that generally follow listing a site, not with the listing itself. Since this comment does not affect the HRS score of this site, EPA is placing it on the final NPL at this time under the site name Mallard Bay Landing Bulk Plant.

EPA responded to all relevant comments received on the other sites. EPA's responses to site-specific public comments are addressed in the ''Support Document for the Revised National Priorities List Final Rule—July 2000''.

IV. Executive Order 12866

A. What Is Executive Order 12866?

Under Executive Order 12866, (58 FR 51735 (October 4, 1993)) the Agency must determine whether a regulatory action is ''significant'' and therefore subject to OMB review and the requirements of the Executive Order. The Order defines ''significant regulatory action'' as one that is likely to result in a rule that may: (1) Have an annual effect on the economy of $100 million or more or adversely affect in a material way the economy, a sector of the economy, productivity, competition, jobs, the environment, public health or safety, or State, local, or tribal governments or communities; (2) create a serious inconsistency or otherwise interfere with an action taken or planned by another agency; (3) materially alter the budgetary impact of entitlements, grants, user fees, or loan programs or the rights and obligations of recipients thereof; or (4) raise novel legal or policy issues arising out of legal mandates, the President's priorities, or the principles set forth in the Executive Order.

B. Is This Final Rule Subject to Executive Order 12866 Review?

No, the Office of Management and Budget (OMB) has exempted this regulatory action from Executive Order 12866 review.

V. Unfunded Mandates

A. What Is the Unfunded Mandates Reform Act (UMRA)?

Title II of the Unfunded Mandates Reform Act of 1995 (UMRA), Public Law 104–4, establishes requirements for Federal Agencies to assess the effects of their regulatory actions on State, local, and tribal governments and the private sector. Under section 202 of the UMRA, EPA generally must prepare a written statement, including a cost-benefit analysis, for proposed and final rules with ''Federal mandates'' that may result in expenditures by State, local, and tribal governments, in the aggregate, or by the private sector, of $100 million or more in any one year. Before EPA promulgates a rule for which a written statement is needed, section 205 of the UMRA generally requires EPA to identify and consider a reasonable number of regulatory alternatives and adopt the least costly, most cost-effective, or least burdensome alternative that achieves the objectives of the rule. The provisions of section 205 do not apply when they are inconsistent with applicable law. Moreover, section 205 allows EPA to

adopt an alternative other than the least costly, most cost-effective, or least burdensome alternative if the Administrator publishes with the final rule an explanation why that alternative was not adopted. Before EPA establishes any regulatory requirements that may significantly or uniquely affect small governments, including tribal governments, it must have developed under section 203 of the UMRA a small government agency plan. The plan must provide for notifying potentially affected small governments, enabling officials of affected small governments to have meaningful and timely input in the development of EPA regulatory proposals with significant Federal intergovernmental mandates, and informing, educating, and advising small governments on compliance with the regulatory requirements.

B. Does UMRA Apply to This Final Rule?

No, EPA has determined that this rule does not contain a Federal mandate that may result in expenditures of $100 million or more for State, local, and tribal governments in the aggregate, or by the private sector in any one year. This rule will not impose any federal intergovernmental mandate because it imposes no enforceable duty upon State, tribal or local governments. Listing a site on the NPL does not itself impose any costs. Listing does not mean that EPA necessarily will undertake remedial action. Nor does listing require any action by a private party or determine liability for response costs. Costs that arise out of site responses result from site-specific decisions regarding what actions to take, not directly from the act of listing a site on the NPL.

For the same reasons, EPA also has determined that this rule contains no regulatory requirements that might significantly or uniquely affect small governments. In addition, as discussed above, the private sector is not expected to incur costs exceeding $100 million. EPA has fulfilled the requirement for analysis under the Unfunded Mandates Reform Act.

VI. Effect on Small Businesses

A. What Is the Regulatory Flexibility Act?

Pursuant to the Regulatory Flexibility Act (5 U.S.C. 601 et seq., as amended by the Small Business Regulatory Enforcement Fairness Act (SBREFA) of 1996) whenever an agency is required to publish a notice of rulemaking for any proposed or final rule, it must prepare and make available for public comment a regulatory flexibility analysis that describes the effect of the rule on small entities (i.e., small businesses, small organizations, and small governmental jurisdictions). However, no regulatory flexibility analysis is required if the head of an agency certifies the rule will not have a significant economic impact on a substantial number of small entities. SBREFA amended the Regulatory Flexibility Act to require Federal agencies to provide a statement of the factual basis for certifying that a rule will not have a significant economic impact on a substantial number of small entities.

B. Does the Regulatory Flexibility Act Apply to this Final Rule?

No. While this rule revises the NPL, an NPL revision is not a typical regulatory change since it does not automatically impose costs. As stated above, adding sites to the NPL does not in itself require any action by any party, nor does it determine the liability of any party for the cost of cleanup at the site. Further, no identifiable groups are affected as a whole. As a consequence, impacts on any group are hard to predict. A site's inclusion on the NPL could increase the likelihood of adverse impacts on responsible parties (in the form of cleanup costs), but at this time EPA cannot identify the potentially affected businesses or estimate the number of small businesses that might also be affected.

The Agency does expect that placing the sites in this rule on the NPL could significantly affect certain industries, or firms within industries, that have caused a proportionately high percentage of waste site problems. However, EPA does not expect the listing of these sites to have a significant economic impact on a substantial number of small businesses.

In any case, economic impacts would occur only through enforcement and cost-recovery actions, which EPA takes at its discretion on a site-by-site basis. EPA considers many factors when determining enforcement actions, including not only a firm's contribution to the problem, but also its ability to pay. The impacts (from cost recovery) on small governments and nonprofit organizations would be determined on a similar case-by-case basis.

For the foregoing reasons, I hereby certify that this rule, if promulgated, will not have a significant economic impact on a substantial number of small entities. Therefore, this regulation does not require a regulatory flexibility analysis.

VII. Possible Changes to the Effective Date of the Rule

A. Has This Rule Been Submitted to Congress and the General Accounting Office?

The Congressional Review Act, 5 U.S.C. 801 et seq., as added by the Small Business Regulatory Enforcement Fairness Act of 1996, generally provides that before a rule may take effect, the agency promulgating the rule must submit a rule report, which includes a copy of the rule, to each House of the Congress and to the Comptroller General of the United States. EPA has submitted a report containing this rule and other required information to the U.S. Senate, the U.S. House of Representatives, and the Comptroller General of the United States prior to publication of the rule in the **Federal Register**. A ''major rule'' cannot take effect until 60 days after it is published in the **Federal Register**. This rule is not a ''major rule'' as defined by 5 U.S.C. 804(2).

B. Could the Effective Date of This Final Rule Change?

Provisions of the Congressional Review Act (CRA) or section 305 of CERCLA may alter the effective date of this regulation.

Under the CRA, 5 U.S.C. 801(a), before a rule can take effect the federal agency promulgating the rule must submit a report to each House of the Congress and to the Comptroller General. This report must contain a copy of the rule, a concise general statement relating to the rule (including whether it is a major rule), a copy of the cost-benefit analysis of the rule (if any), the agency's actions relevant to provisions of the Regulatory Flexibility Act (affecting small businesses) and the Unfunded Mandates Reform Act of 1995 (describing unfunded federal requirements imposed on state and local governments and the private sector), and any other relevant information or requirements and any relevant Executive Orders.

EPA has submitted a report under the CRA for this rule. The rule will take effect, as provided by law, within 30 days of publication of this document, since it is not a major rule. Section 804(2) defines a major rule as any rule that the Administrator of the Office of Information and Regulatory Affairs (OIRA) of the Office of Management and Budget (OMB) finds has resulted in or is likely to result in: an annual effect on the economy of $100,000,000 or more; a major increase in costs or prices for consumers, individual industries, Federal, State, or local government agencies, or geographic regions; or

significant adverse effects on competition, employment, investment, productivity, innovation, or on the ability of United States-based enterprises to compete with foreign-based enterprises in domestic and export markets. NPL listing is not a major rule because, as explained above, the listing, itself, imposes no monetary costs on any person. It establishes no enforceable duties, does not establish that EPA necessarily will undertake remedial action, nor does it require any action by any party or determine its liability for site response costs. Costs that arise out of site responses result from site-by-site decisions about what actions to take, not directly from the act of listing itself. Section 801(a)(3) provides for a delay in the effective date of major rules after this report is submitted.

C. What Could Cause the Effective Date of This Rule to Change?

Under 5 U.S.C. 801(b)(1) a rule shall not take effect, or continue in effect, if Congress enacts (and the President signs) a joint resolution of disapproval, described under section 802.

Another statutory provision that may affect this rule is CERCLA section 305, which provides for a legislative veto of regulations promulgated under CERCLA. Although *INS* v. *Chadha*, 462 U.S. 919,103 S. Ct. 2764 (1983) and *Bd. of Regents of the University of Washington* v. *EPA*, 86 F.3d 1214, 1222 (D.C. Cir. 1996) cast the validity of the legislative veto into question, EPA has transmitted a copy of this regulation to the Secretary of the Senate and the Clerk of the House of Representatives.

If action by Congress under either the CRA or CERCLA section 305 calls the effective date of this regulation into question, EPA will publish a document of clarification in the **Federal Register**.

VIII. National Technology Transfer and Advancement Act

A. What Is the National Technology Transfer and Advancement Act?

Section 12(d) of the National Technology Transfer and Advancement Act of 1995 (NTTAA), Public Law 104–113, section 12(d) (15 U.S.C. 272 note), directs EPA to use voluntary consensus standards in its regulatory activities unless to do so would be inconsistent with applicable law or otherwise impractical. Voluntary consensus standards are technical standards (e.g., materials specifications, test methods, sampling procedures, and business practices) that are developed or adopted by voluntary consensus standards bodies. The NTTAA directs EPA to provide Congress, through OMB, explanations when the Agency decides not to use available and applicable voluntary consensus standards.

B. Does the National Technology Transfer and Advancement Act Apply to This Final Rule?

No. This rulemaking does not involve technical standards. Therefore, EPA did not consider the use of any voluntary consensus standards.

IX. Executive Order 12898

A. What is Executive Order 12898?

Under Executive Order 12898, ''Federal Actions to Address Environmental Justice in Minority Populations and Low-Income Populations,'' as well as through EPA's April 1995, ''Environmental Justice Strategy, OSWER Environmental Justice Task Force Action Agenda Report,'' and National Environmental Justice Advisory Council, EPA has undertaken to incorporate environmental justice into its policies and programs. EPA is committed to addressing environmental justice concerns, and is assuming a leadership role in environmental justice initiatives to enhance environmental quality for all residents of the United States. The Agency's goals are to ensure that no segment of the population, regardless of race, color, national origin, or income, bears disproportionately high and adverse human health and environmental effects as a result of EPA's policies, programs, and activities, and all people live in clean and sustainable communities.

B. Does Executive Order 12898 Apply to this Final Rule?

No. While this rule revises the NPL, no action will result from this rule that will have disproportionately high and adverse human health and environmental effects on any segment of the population.

X. Executive Order 13045

A. What Is Executive Order 13045?

Executive Order 13045: ''Protection of Children from Environmental Health Risks and Safety Risks'' (62 FR 19885, April 23, 1997) applies to any rule that: (1) Is determined to be ''economically significant'' as defined under Executive Order 12866, and (2) concerns an environmental health or safety risk that EPA has reason to believe may have a disproportionate effect on children. If the regulatory action meets both criteria, the Agency must evaluate the environmental health or safety effects of the planned rule on children, and explain why the planned regulation is preferable to other potentially effective and reasonably feasible alternatives considered by the Agency.

B. Does Executive Order 13045 Apply to This Final Rule?

This rule is not subject to Executive Order 13045 because it is not an economically significant rule as defined by Executive Order 12866, and because the Agency does not have reason to believe the environmental health or safety risks addressed by this section present a disproportionate risk to children.

XI. Paperwork Reduction Act

A. What Is the Paperwork Reduction Act?

According to the Paperwork Reduction Act (PRA), 44 U.S.C. 3501 *et seq.*, an agency may not conduct or sponsor, and a person is not required to respond to a collection of information that requires OMB approval under the PRA, unless it has been approved by OMB and displays a currently valid OMB control number. The OMB control numbers for EPA's regulations, after initial display in the preamble of the final rules, are listed in 40 CFR part 9. The information collection requirements related to this action have already been approved by OMB pursuant to the PRA under OMB control number 2070–0012 (EPA ICR No. 574).

B. Does the Paperwork Reduction Act Apply to This Final Rule?

No. EPA has determined that the PRA does not apply because this rule does not contain any information collection requirements that require approval of the OMB.

XII. Executive Orders on Federalism

What Are The Executive Orders on Federalism and Are They Applicable to This Final Rule?

Executive Order 13132, entitled ''Federalism'' (64 FR 43255, August 10, 1999), requires EPA to develop an accountable process to ensure ''meaningful and timely input by State and local officials in the development of regulatory policies that have federalism implications.'' ''Policies that have federalism implications'' is defined in the Executive Order to include regulations that have ''substantial direct effects on the States, on the relationship between the national government and the States, or on the distribution of power and responsibilities among the various levels of government.''

Under section 6 of Executive Order 13132, EPA may not issue a regulation that has federalism implications, that

imposes substantial direct compliance costs, and that is not required by statute, unless the Federal government provides the funds necessary to pay the direct compliance costs incurred by State and local governments, or EPA consults with State and local officials early in the process of developing the proposed regulation. EPA also may not issue a regulation that has federalism implications and that preempts State law, unless the Agency consults with State and local officials early in the process of developing the proposed regulation.

This final rule does not have federalism implications. It will not have substantial direct effects on the States, on the relationship between the national government and the States, or on the distribution of power and responsibilities among the various levels of government, as specified in Executive Order 13132. Thus, the requirements of section 6 of the Executive Order do not apply to this rule.

XIII. Executive Order 13084

What is Executive Order 13084 and Is It Applicable to this Final Rule?

Under Executive Order 13084, EPA may not issue a regulation that is not required by statute, that significantly or uniquely affects the communities of Indian tribal governments, and that imposes substantial direct compliance costs on those communities, unless the Federal government provides the funds necessary to pay the direct compliance costs incurred by the tribal governments, or EPA consults with those governments. If EPA complies by consulting, Executive Order 13084 requires EPA to provide to the Office of Management and Budget, in a separately identified section of the preamble to the rule, a description of the extent of EPA's prior consultation with representatives of affected tribal governments, a summary of the nature of their concerns, and a statement supporting the need to issue the regulation. In addition, Executive Order 13084 requires EPA to develop an effective process permitting elected officials and other representatives of Indian tribal governments ''to provide meaningful and timely input in the development of regulatory policies on matters that significantly or uniquely affect their communities.''

This rule does not significantly or uniquely affect the communities of Indian tribal governments because it does not significantly or uniquely affect their communities. Accordingly, the requirements of section 3(b) of Executive Order 13084 do not apply to this rule.

List of Subjects in 40 CFR Part 300

Environmental protection, Air pollution control, Chemicals, Hazardous substances, Hazardous waste, Intergovernmental relations, Natural resources, Oil pollution, penalties, Reporting and record keeping requirements, Superfund, Water pollution control, Water supply.

Dated: July 20, 2000.

Timothy Fields, Jr.,

Assistant Administrator, Office of Solid Waste and Emergency Response.

40 CFR part 300 is amended as follows:

PART 300—[AMENDED]

1. The authority citation for part 300 continues to read as follows:

Authority: 33 U.S.C. 1321(c)(2); 42 U.S.C. 9601–9657; E.O. 12777, 56 FR 54757, 3 CFR, 1991 Comp., p. 351; E.O. 12580, 52 FR 2923, 3 CFR, 1987 Comp., p. 193.

2. Table 1 and Table 2 of Appendix B to Part 300 are amended by adding the following sites in alphabetical order to read as follows:

Appendix B to Part 300—National Priorities List

TABLE 1.—GENERAL SUPERFUND SECTION

State	Site name	City/county	Notes(a)
*	* * * * *	*	*
CT	Scovill Industrial Landfill	Waterbury	
*	* * * * *	*	*
FL	Southern Solvents, Inc	Tampa	
*	* * * * *	*	*
LA	Mallard Bay Landing Bulk Plant	Grand Cheniere	
*	* * * * *	*	*
MO	Newton County Wells	Newton County	
*	* * * * *	*	*
MS	Davis Timber Company	Hattiesburg	
*	* * * * *	*	*
OK	Imperial Refining Company	Ardmore	
*	* * * * *	*	*
TX	Palmer Barge Line	Port Arthur	
*	* * * * *	*	*
TX	Star Lake Canal	Port Neches	
*	* * * * *	*	*
UT	International Smelting and Refining	Tooele	
*	* * * * *	*	*
WA	Hamilton/Labree Roads Ground Water Contamination	Chehalis	
*	* * * * *	*	*
WV	Big John Salvage—Hoult Road	Fairmont	

TABLE 1.—GENERAL SUPERFUND SECTION—Continued

State	Site name	City/county	Notes(a)
*	*	*	*

(a) A = Based on issuance of health advisory by Agency for Toxic Substance and Disease Registry (if scored, HRS score need not be ≤ 28.50).
C = Sites on construction completion list.
S = State top priority (included among the 100 top priority sites regardless of score).
P = Sites with partial deletion(s).

TABLE 2.—FEDERAL FACILITIES SECTION

State	Site name	City/county	Notes(a)
*	*	*	*
VA	St. Juliens Creek Annex (U.S. Navy)	Chesapeake	
*	*	*	*

(a) A = Based on issuance of health advisory by Agency for Toxic Substance and Disease Registry (if scored, HRS score need not be ≤ 28.50).
C = Sites on construction completion list.
S = State top priority (included among the 100 top priority sites regardless of score).
P = Sites with partial deletion(s).

[FR Doc. 00–18902 Filed 7–26–00; 8:45 am]
BILLING CODE 6560–50–P

ENVIRONMENTAL PROTECTION AGENCY

40 CFR Part 430

[FRL–6842–2]

Project XL Site-Specific Rule for the International Paper Androscoggin Mill Facility in Jay, Maine; Project XL Final Project Agreement to be Signed for Effluent Improvement Project at International Paper Androscoggin Mill Facility in Jay, Maine

AGENCY: Environmental Protection Agency (EPA).

ACTION: Final rule; notice regarding signing of final project agreement.

SUMMARY: The Environmental Protection Agency (EPA) today is finalizing this rule to provide site-specific regulatory flexibility under the Clean Water Act (CWA) as part of an XL Project with International Paper's Androscoggin Mill pulp and paper manufacturing facility in Jay, Maine. The site-specific rule will exempt International Paper Androscoggin Mill from certain Best Management Practices (BMPs) required under CWA regulations. In exchange for this regulatory flexibility, International Paper Androscoggin Mill will implement a series of projects designed to improve the mill's effluent quality and will accept numeric permit limits corresponding to the expected improvements in effluent quality. The terms of the International Paper XL project are contained in the Final Project Agreement (FPA), which project participants are expected to sign on June 29, 2000.

EFFECTIVE DATE: This final rule is effective on July 27, 2000.

ADDRESSES: A docket containing the final rule, Final Project Agreement, and supporting materials is available for public inspection and copying at the U.S. Environmental Protection Agency, 401 M. St., SW., Washington, DC, Room 1027. Members of the public are encouraged to telephone in advance at 202–260–3344 to schedule an appointment.

A duplicate copy of project materials is available for inspection and copying at EPA Regional Library, U.S. EPA, Region I, Suite 1100 (LIB), One Congress Street, Boston MA, 02114–2023, as well as the Town Hall, 99 Main Street, Jay, ME 04239 during normal business hours. Persons wishing to view the materials at the Boston location are encouraged to contact Mr. Chris Rascher in advance. Persons wishing to view the materials at the Jay, Maine, location are encouraged to contact Ms. Shiloh Ring at (207) 897–6785 in advance.

Project materials on today's action are also available on the worldwide web at http://www.epa.gov/projectxl/.

FOR FURTHER INFORMATION CONTACT: Persons seeking information on the project should contact Mr. Chris Rascher in U.S. EPA/Region 1—New England or Ms. Nina Bonnelycke in U.S. EPA Headquarters. Mr. Rascher can be reached at U.S. Environmental Protection Agency, One Congress St., Suite 1100, Boston, MA 02114, or at *rascher.chris@epa.gov.* Ms. Bonnelycke can be reached at U.S. Environmental Protection Agency, Ariel Rios Building, 1200 Pennsylvania Ave., NW., Washington, DC 20460, or at bonnelycke.nina@epa.gov.

Further information on today's action is also available on the worldwide web at http://www.epa.gov/projectxl.

SUPPLEMENTARY INFORMATION:

Category	Examples of potentially affected parties
Industry	International Paper, Androscoggin Mill, Jay, Maine

Outline of Today's Document

This preamble presents the following information:

I. Authority
II. Overview of Project XL
III. Overview of the International Paper Effluent Improvements XL Project
A. To Which Facilities Will the Final Rule Apply?
B. From What Required Activities Will Today's Final Rule Provide an Exemption?
C. What Will the IP-Androscoggin Mill Do Differently Under The XL Project?
D. What Regulatory Changes Will Be Necessary to Implement this Project?
E. Why is EPA Supporting This Approach of Granting a Waiver from BMPs?
F. How Have Stakeholders Been Involved in this Project?
G. How Will this Project Result in Cost Savings and Paperwork Reduction?
H. What Are The Enforceable Provisions Of The Project?
I. How Long Will this Project Last and When Will It Be Completed?
IV. Additional Information

A. How Does this Final Rule Comply With Executive Order 12866?
B. Is a Regulatory Flexibility Analysis Required?
C. Is an Information Collection Request Required for this Project Under the Paperwork Reduction Act?
D. Does this Project Trigger the Requirements of the Unfunded Mandates Reform Act?
E. How Does this Rule Comply with Executive Order 13045: Protection of Children from Environmental Health Risks and Safety Risks?
F. How Does this Rule Comply with Executive Order 13084: Consultation and Coordination with Indian Tribal Governments?
G. Does this Rule Comply with Executive Order 13132?
H. Does this Rule Comply with the National Technology Transfer and Advancement Act?
I. Does This Rule Comply With the Congressional Review Act?

I. Authority

EPA is publishing this regulation under the authority of sections 402 and 501 of the Clean Water Act, as amended, (33 U.S.C. 1342 and 1361).

II. Overview of Project XL

Project XL—excellence and Leadership''— was announced on March 16, 1995, as a central part of the National Performance Review and the EPA's effort to reinvent environmental protection. See 60 FR 27282 (May 23, 1995). Project XL gives individual private and public regulated entities the opportunity to develop their own pilot projects wherein the Agency provides targeted regulatory flexibility in exchange for improved environmental performance. EPA intends to use Project XL and other related efforts to test innovative strategies for reducing the regulatory burden and promoting economic growth while achieving better environmental and public health protection.

To participate in XL, interested parties must develop a proposal that satisfies a number of criteria, including criteria for superior environmental performance, transferability, and stakeholder involvement. The definition of ''environmental performance'' under XL is broad, and EPA seeks superior performance under XL both in areas under existing EPA jurisdiction such as waste handling, air emissions, or effluent treatment, as well as through environmental innovations in fields as diverse as data monitoring and reporting or product stewardship.

The Final Project Agreement (FPA) that evolves out of the review and development of the proposal is a written agreement between the project sponsor and regulatory agencies regarding the details of the proposed project. The FPA outlines how the project will meet the XL review criteria and identifies performance goals and indicators to ensure that the project's anticipated benefits are realized. The FPA also discusses the administration of the agreement, including dispute resolution and termination. Today, EPA announces the signing of the FPA for this project, planned as of publication date for June 29, 2000. This document is available for review as indicated above under **ADDRESSES.**

For more information about the XL program, XL criteria, or about specific XL projects underway, please refer to *http://www.epa.gov/projectxl* or contact EPA as indicated above under **FOR FURTHER INFORMATION CONTACT.**

III. Overview of the International Paper Effluent Improvements XL Project

EPA today is finalizing the rule that will implement key provisions of the International Paper Effluent Improvements XL Project. At the time of publication of today's document, project participants were scheduled to sign the FPA on June 29, 2000. Today's site-specific rule is necessary for the project to proceed. The FPA outlines the intentions of EPA and other project participants on the XL project. The FPA was developed by representatives from EPA, the International Paper Androscoggin Mill in Jay, Maine (IP-Androscoggin), the Maine Department of Environmental Protection (MEDEP), the Town of Jay, and other stakeholders.

A. To Which Facilities Will the Final Rule Apply?

This rule will apply only to the International Paper Androscoggin Mill in Jay, Maine.

B. From What Required Activities Will Today's Final Rule Provide an Exemption?

The rule exempts the IP-Androscoggin Mill from existing federal regulations codified under the Clean Water Act at 40 CFR 430.03. Those regulations require pulp and paper facilities to implement specified BMPs, *e.g.*, installing and maintaining various operating procedures and infrastructure within the facility; monitoring, data gathering, and reporting; and carrying out several other activities designed to prevent leaks and spills of spent pulping liquor, soap and turpentine that would otherwise lead to increased discharges of pollutants from the final effluent.

C. What Will the IP-Androscoggin Mill Do Differently Under The XL Project?

International Paper's claim in its XL proposal was that existing practices at the Androscoggin Mill, including existing spill prevention procedures and process control technologies, are advanced enough to preclude any further improvements to the final effluent from implementation of the BMPs specified in 40 CFR 430.03. To support this claim, the IP-Androscoggin Mill detailed as part of project review discussions how, item-by-item, the mill's infrastructure, operations and procedures are equivalent to or achieve the same objectives as the BMP requirements under the CWA for pulp and paper facilities.

Under the XL project, the IP-Androscoggin Mill will maintain these practices in order to ensure that current environmental performance is sustained. In exchange for the exemption from the requirements of 40 CFR 430.03, the IP-Androscoggin Mill will in addition implement a number of projects designed to improve the mill's effluent quality for chemical oxygen demand (COD) and color beyond levels likely to be attained through implementation of the BMP requirements specified in 40 CFR 430.03. These steps all derive from the project's two most important components:

- Implementation of a series of effluent improvement projects under the guidance of a Collaborative Process Team with members from IP, EPA, MEDEP, the Town of Jay, and other stakeholders;
- Amendment or reissuance of the IP-Androscoggin Mill effluent discharge permit to include numeric limitations for color and chemical oxygen demand (COD) at levels that in Phase 1 of the project guarantee sustained environmental performance and in Phase 2 of the project capture in the permit any future performance improvements deriving from the XL project.

The Final Project Agreement, available as indicated under **ADDRESSES** above, describes in greater detail the steps associated with the XL project.

D. What Regulatory Changes Will Be Necessary to Implement this Project?

To allow this XL project to be implemented, the Agency is today finalizing a rule that exempts the IP-Androscoggin Mill from the BMP requirements specified in 40 CFR 430.03. This site-specific rule further provides that, in lieu of imposing the requirements specified in § 430.03, the permitting authority shall establish conditions for the discharge of COD and color for this mill on the basis of best professional judgment. Because both

EPA and the Maine Department of Environmental Protection will be signatories to the FPA, EPA expects that the requirements for COD and color will be based on the values and procedures specified in the FPA. That is, subsequent to issuance of this site-specific rule, the appropriate permitting authority(ies) will amend or reissue the IP-Androscoggin effluent discharge permit to remove the requirements corresponding to 40 CFR 430.03 and put in place instead numeric effluent limitations on COD and color that reflect, in the first phase, current effluent quality and, in the second phase, improved effluent quality resulting from the implementation by the IP-Androscoggin Mill of alternative effluent improvement projects called for by this project.

E. Why Is EPA Supporting This Approach of Granting a Waiver From BMPs?

The Agency expects that the exemption for the IP-Androscoggin Mill will result in environmental performance superior to that which would be attained by continued adherence to the BMPs specified in 40 CFR 430.03. As the Final Project Agreement explains in detail, the effluent improvement projects that the IP-Androscoggin Mill will put in place under the XL agreement are expected to reduce COD and color in the mill's effluent to approximately half of current levels.

Another important aspect of this project is that it offers EPA a chance to explore how to use a collaborative process to identify facility-specific process improvements that prompt companies to achieve continuous improvements to effluent quality and to memorialize those improvements in the form of evolving permit limits.

F. How Have Stakeholders Been Involved in This Project?

Representatives from several state and local offices have been involved with the development of this project including: the Commissioner of MEDEP, the MEDEP Bureau of Land and Water Quality, members of the Town of Jay Planning Board, Town of Jay Selectmen and the Town of Jay Code Enforcement Officer. The University of Maine has also participated actively in this project. The U.S. Fish and Wildlife Service has also been involved on several occasions.

Non-governmental stakeholders who were invited to participate include but are not limited to: Natural Resource Council of Maine, Environment Northeast, Appalachian Mountain Club, and Western Mountain Alliance. Industry associations who were invited to participate include the Maine Pulp and Paper Association and the National Council of Air and Stream Improvement.

Comments from all other organizations and individuals are welcomed throughout the stakeholder process. All stakeholders including the general public have been and will continue to be notified through local newspaper announcements of meetings and the availability of project documents for review, and there is a specific provision in this project to continue to involve stakeholders as the effluent improvement projects are designed and implemented.

G. How Will This Project Result in Cost Savings and Paperwork Reduction?

IP-Androscoggin proposed this XL project to EPA believing that they could achieve better environmental protection by implementing effluent improvement projects specially tailored to the mill rather than focusing on adhering to existing BMP requirements under the CWA. Since the mill has agreed to re-commit any savings from the exemption to the new projects, the mill will experience little or no net savings as a result of the XL project. Specifically, although IP estimates savings from the BMP exemption of approximately $780,000 in capital and operating costs, these savings will be offset by a corresponding increase in expenditures on the effluent improvement projects.

H. What Are The Enforceable Provisions of the Project?

The enforceable provisions of this project are numeric effluent limitations incorporated into the mill's effluent discharge permit. As noted above, the project contemplates two sets of limits. The first set of limits (known as Phase 1 limits in the FPA), reflects current effluent quality for COD and color and corresponds to effluent quality deriving from the BMPs presently in place at the mill (which EPA judged to be equivalent in terms of performance to the BMPs specified in 40 CFR 430.03). The second set of limits for COD and color (known as the Phase 2 limits in the FPA) will be established in accordance with procedures specified in the FPA once the effluent improvement projects are fully implemented to include limits for COD and color that reflect actual performance improvements.

I. How Long Will This Project Last and When Will It Be Completed?

The Project Signatories intend that this project will be concluded at the end of four (4) years: One year to identify and select the list of effluent improvement projects; two years to design and construct the projects; and one year to collect monitoring data for the purposes of calculating the Phase 2 permit limits and to perform overall project evaluation. At the end of four years, if the project is judged to be a success under the terms described in the FPA, EPA intends to allow the IP-Androscoggin Mill to continue operating under the site-specific rule promulgated after the FPA is signed. However, the Administrator may promulgate a rule to withdraw the exemption at any time in the future if the terms and objectives of the FPA are not met or if the exemption becomes inconsistent with future statutory or regulatory requirements.

EPA notes that adoption of an exemption from the BMP regulations in the context of this XL project does not signal EPA's willingness to adopt that exemption as a general matter or as part of other XL projects. It would be inconsistent with the forward-looking nature of these pilot projects to adopt such innovative approaches prematurely on a widespread basis without first determining whether or not they are viable in practice and successful in the particular projects that embody them. Furthermore, as EPA indicated in announcing the XL program, EPA expects to adopt only a limited number of carefully selected projects. These pilot projects are not intended to be a means for piecemeal revision of entire programs. Depending on the results obtained from this project, EPA may or may not be willing to consider adopting BMP exemptions either generally or for other specific facilities.

IV. Additional Information

A. How Does this Rule Comply With Executive Order 12866?

Because this rule will apply only to one facility, it is not a rule of general applicability and therefore is not subject to OMB review under Executive Order 12866. In addition, OMB has agreed that review of site-specific rules under Project XL is unnecessary.

B. Is a Regulatory Flexibility Analysis Required?

The Regulatory Flexibility Act (RFA), 5 U.S.C. 601 *et seq.*, generally requires an agency to conduct a regulatory flexibility analysis of any rule subject to notice and comment rulemaking requirements unless the agency certifies that the rule will not have a significant economic impact on a substantial number of small entities. Small entities

include small businesses, small not-for-profit enterprises, and small governmental jurisdictions. This final rule will not have a significant impact on a substantial number of small entities because it only affects the International Paper facility in Jay, Maine, which is not a small entity. Therefore, EPA certifies that this action will not have a significant economic impact on a substantial number of small entities.

C. Is an Information Collection Request Required for This Project Under the Paperwork Reduction Act?

This action applies only to one facility. Therefore any information collection activities it contains are not subject to the Paperwork Reduction Act, 44 U.S.C. 3501, *et seq.* For this reason, EPA is not submitting an information collection request (ICR) to OMB for review under the Paperwork Reduction Act.

D. Does This Project Trigger the Requirements of the Unfunded Mandates Reform Act?

Title II of the Unfunded Mandates Reform Act of 1995 (UMRA), Public Law 104–4, establishes requirements for federal agencies to assess the effects of their regulatory actions on state, local, and tribal governments and the private sector. Under section 202 of the UMRA, EPA generally must prepare a written statement, including a cost-benefit analysis, for proposed and final rules with ''federal mandates'' that may result in expenditures to state, local, and tribal governments, in the aggregate, or to the private sector, of $100 million or more in any one year. Before promulgating an EPA rule for which a written statement is needed, section 205 of the UMRA generally requires EPA to identify and consider a reasonable number of regulatory alternatives and adopt the least costly, most cost-effective or least burdensome alternative that achieves the objectives of the rule. The provisions of section 205 do not apply when they are inconsistent with applicable law. Moreover, section 205 allows EPA to adopt an alternative other than the least costly, most cost-effective or least burdensome alternative if the Administrator publishes with the final rule an explanation of why that alternative was not adopted. Before EPA establishes any regulatory requirements that may significantly or uniquely affect small governments, including tribal governments, it must have developed under section 203 of the UMRA a small government agency plan. The plan must provide for notifying potentially affected small governments, enabling officials of affected small governments to have meaningful and timely input in the development of EPA regulatory proposals with significant federal intergovernmental mandates, and informing, educating, and advising small governments on compliance with the regulatory requirements.

As noted above, this final rule is applicable only to one facility in Maine. EPA has determined that the rule contains no regulatory requirements that might significantly or uniquely affect small governments. EPA has also determined that the rule does not contain a federal mandate that may result in expenditures of $100 million or more for state, local, and tribal governments, in the aggregate, or the private sector in any one year. Thus, today's rule is not subject to the requirements of sections 202 and 205 of the UMRA.

E. How Does This Rule Comply With Executive Order 13045: Protection of Children From Environmental Health Risks and Safety Risks?

The Executive Order 13045, ''Protection of Children from Environmental Health Risks and Safety Risks'' (62 FR 19885, April 23, 1997) applies to any rule that: (1) Is determined to be ''economically significant,'' as defined under Executive Order 12866; and (2) concerns an environmental health or safety risk that EPA has reason to believe may have a disproportionate effect on children. If the regulatory action meets both criteria, the Agency must evaluate the environmental health or safety effects of the planned rule on children, and explain why the planned regulation is preferable to other potentially effective and reasonably feasible alternatives considered by the Agency.

This rule is not subject to Executive Order 13045 because it is not an economically significant rule, as defined by Executive Order 12866, and because it does not involve decisions based on environmental health or safety risks.

F. How Does This Rule Comply With Executive Order 13084: Consultation and Coordination With Indian Tribal Governments?

Under Executive Order 13084, EPA may not issue a regulation that is not required by statute, that significantly or uniquely affects the communities of Indian tribal governments, and that imposes substantial direct compliance costs on those communities, unless the federal government provides the funds necessary to pay the direct compliance costs incurred by the tribal governments. If the mandate is unfunded, EPA must provide to the Office of Management and Budget, in a separately identified section of the preamble to the rule, a description of the extent of EPA's prior consultation with representatives of affected tribal governments, a summary of the nature of their concerns, and a statement supporting the need to issue the regulation. In addition, Executive Order 13084 requires EPA to develop an effective process permitting elected and other representatives of Indian tribal governments to provide meaningful and timely input in the development of regulatory policies on matters that significantly or uniquely affect their communities.

Today's rule will not significantly or uniquely affect the communities of Indian tribal governments, and it will not impose substantial direct compliance costs on such communities. Although Indian tribal communities live in areas near the Androscoggin River, their governments will not be subject to any compliance costs relating to the site-specific rule since the rule is directed at the International Paper mill. Nearby Indian tribal communities are, in fact, expected to benefit directly from the anticipated improvement in water quality. Accordingly, the requirements of section 3(b) of Executive Order 13084 do not apply to this rule.

G. Does This Rule Comply With Executive Order 13132?

Executive Order 13132, entitled ''Federalism'' (64 FR 43255; August 10, 1999), requires EPA to develop an accountable process to ensure ''meaningful and timely input by state and local officials in the development of regulatory policies that have federalism implications.'' ''Policies that have federalism implications'' is defined in the Executive Order to include regulations that have ''substantial direct effects on the states, on the relationship between the national government and the states, or on the distribution of power and responsibilities among the various levels of government.''

Under section 6 of Executive Order 13132, EPA may not issue a regulation that has federalism implications, that imposes substantial direct compliance costs, and that is not required by statute, unless the Federal government provides the funds necessary to pay the direct compliance costs incurred by State and local governments, or EPA consults with State and local officials early in the process of developing the proposed regulation. EPA also may not issue a regulation that has federalism implications and that preempts State law, unless the Agency consults with State and local officials early in the

process of developing the proposed regulation.

This rule does not have federalism implications. It will apply only to a single facility, and it will therefore not have substantial direct effects on the States, on the relationship between the national government and the States, or on the distribution of power and responsibilities among the various levels of government, as specified in Executive Order 13132. Thus, the requirements of section 6 of the Executive Order do not apply to this rule.

H. Does This Rule Comply With the National Technology Transfer and Advancement Act?

Section 12(d) of the National Technology Transfer and Advancement Act of 1995 (''NTTAA''), Public Law 104–113, section 12(d) (15 U.S.C. 272 note) directs EPA to use voluntary consensus standards in its regulatory activities unless to do so will be inconsistent with applicable law or otherwise impractical. Voluntary consensus standards are technical standards (*e.g.*, materials specifications, test methods, sampling procedures, and business practices) that are developed or adopted by voluntary consensus standards bodies. The NTTAA directs EPA to provide Congress, through OMB, explanations when the Agency decides not to use available and applicable voluntary consensus standard. This rulemaking does not involve technical standards developed by any voluntary consensus standards bodies. Therefore, EPA is not considering the use of any voluntary consensus standards.

I. Does This Rule Comply With the Congressional Review Act?

The Congressional Review Act, 5 U.S.C. 801 *et seq.*, as added by the Small Business Regulatory Enforcement Fairness Act of 1996, generally provides that before a rule may take effect, the agency promulgating the rule must submit a rule report, which includes a copy of the rule, to each House of the Congress and to the Comptroller General of the United States. Section 804 exempts from section 801 the following types of rules (1) rules of particular applicability; (2) rules relating to agency management or personnel; and (3) rules of agency organization, procedure, or practice that do not substantially affect the rights or obligations of non-agency parties. 5 U.S.C. 804(3). EPA is not required to submit a rule report regarding today's action under section 801 because this is a rule of particular applicability.

List of Subjects in 40 CFR Part 430

Environmental protection, Reporting and recordkeeping requirements, Water pollution control.

Dated: July 21, 2000.

Carol M. Browner,

Administrator.

For the reasons set forth in the preamble, title 40 Chapter I of the Code of Federal Regulations is amended as follows:

PART 430—THE PULP, PAPER, AND PAPERBOARD POINT SOURCE CATEGORY

1. The authority citation for part 430 continues to read as follows:

Authority: Sections 301, 304, 306, 307, 308, 402, and 501 of the Clean Water Act, as amended, (33 U.S.C. 1311, 1314, 1316, 1317, 1318, 1342, and 1361), and section 112 of the Clean Air Act, as amended (42 U.S.C. 7412).

2. Section 430.03 is amended by adding paragraph (k) to read as follows:

§ 430.03 Best management practices (BMPs) for spent pulping liquor, soap, and turpentine management, spill prevention, and control.

* * * * *

(k) The provisions of paragraphs (c) through (j) of this section do not apply to the bleached papergrade kraft mill, commonly known as the Androscoggin Mill, that is owned by International Paper and located in Jay, Maine. In lieu of imposing the requirements specified in those paragraphs, the permitting authority shall establish conditions for the discharge of COD and color for this mill on the basis of best professional judgment.

[FR Doc. 00–19010 Filed 7–26–00; 8:45 am]

BILLING CODE 6560–50–U

FEDERAL COMMUNICATIONS COMMISSION

47 CFR Part 1

[FCC 00–182]

Computation of Time

AGENCY: Federal Communications Commission.

ACTION: Final rule.

SUMMARY: This Order adopts minor amendments to the Commission's computation of time rule. The clarifications will make it easier for the public to interpret the rules thereby providing better service to the public.

DATES: Effective July 27, 2000.

FOR FURTHER INFORMATION CONTACT: Marjorie Bertman, Office of General Counsel, (202) 418–1720.

SUPPLEMENTARY INFORMATION:

1. In this order we make minor amendments to the Commission's computation of time rule, 47 CFR 1.4, to clarify the rule. We clarify that the date of ''public notice'' for all rulemaking documents required by the Administrative Procedure Act (APA), 5 U.S.C. 552(a), 553, to be published in the **Federal Register**, is the date of publication in the **Federal Register**. We also clarify the date of ''public notice'' for Commission determinations in section 271 proceedings, 47 U.S.C. 271.

2. Section 1.4 establishes the method for computing the amount of time within which persons or entities must act in response to deadlines established by the Commission. It also applies to computation of time for seeking both reconsideration and judicial review of Commission decisions. Section 1.4(b) provides that unless otherwise indicated, the first day to be counted when a time period begins with an action taken by the Commission is the day after the day on which ''public notice'' of the action is given. Section 1.4(b)(1) defines the term ''public notice'' for documents in ''notice and comment rulemaking proceedings'' as the date of publication in the **Federal Register**, and section 1.4(b)(2) defines ''public notice'' for non-rulemaking documents as the release date, whether or not the document is published in the **Federal Register**.

3. The existing rules do not indicate specifically what the date of ''public notice'' should be for rulemaking documents required to be published in the **Federal Register**, *see* 5 U.S.C. 552(a)(C)–(E), 553(b), but that are adopted without notice and comment in accordance with the exceptions provided in the APA. Such rulemakings include rules involving a military or foreign affairs function, interpretive rules, rules of agency organization procedure or practice, general statements of policy, or rules adopted when the agency for good cause finds that notice and comment are impracticable, unnecessary or contrary to the public interest. 5 U.S.C. 553(a)(b)(A), (B). In order to make clear what the ''public notice'' date is for these non-notice and comment rulemaking proceedings, we are amending section 1.4(b)(1). The rule will now indicate that the date of publication in the **Federal Register** is the date of ''public notice'' for all notice and comment rulemakings and for all rulemaking documents required by the APA to be

published in the **Federal Register**. We note that interlocutory procedural rulings in rulemaking proceedings, such as orders granting extensions of time or other miscellaneous procedural orders that directly pertain to a rulemaking itself, are governed by amended section 1.4(b)(1), because these procedural orders in rulemaking dockets are required to be published in the **Federal Register**.

4. We also clarify that proceedings that do not fall within the class of rulemaking decisions that must be published in the **Federal Register**, such as adjudicatory matters, *e.g.* individual licensing decisions and waivers as to specific parties, do not come within the scope of section 1.4(b)(1), even if the decisions happen to be related to, or issued in, an on-going rule making docket. In so doing, we expressly depart from the interpretation of our computation of time rule that was announced in *Adams Telcom, Inc.* v. *FCC,* 997 F.2d 955 (D.C. Cir. 1993). The date of public notice for decisions in such non-rulemaking matters is the release date of the document that contains the Commission's decision, not the date of publication in the **Federal Register**.

5. Finally, we are amending section 1.4(b)(2) to make clear that ''public notice'' for section 271 determinations is the date of release of the Commission's decision. Section 271(d)(5) of the Communications Act, 47 U.S.C. 271(d)(5), adopted as part of the Telecommunications Act of 1996, requires the Commission, not later than 10 days after issuing a determination approving or denying an authorization request from a Bell Operating Company to provide interLATA services pursuant to section 271, to publish a brief description of its written determination in the **Federal Register**. Although the statute requires their publication in the **Federal Register**, decisions with respect to section 271 applications are adjudications, not rulemakings. The brief summaries of the Commission's section 271 determinations thus appear in the notices category of the **Federal Register**, not the rules category. Consistent with their adjudicatory status, the date of public notice for section 271 decisions is properly the date of release, and the rules are amended to state this explicitly.

6. The rule amendments adopted herein involve rules of agency organization, procedure, or practice, and the notice and comment and effective date provisions of the Administrative Procedure Act are therefore inapplicable. 5 U.S.C. 553(b)(A), (d).

7. Because members of the public relied on the prior interpretation of our rules announced in *Adams Telcom, Inc.,* the amended rule as it applies with respect to these adjudicatory decisions (and which is explained in a new note to amended section 1.4(b)(1)), applies only to Commission decisions released on or after the effective date of the amended rule. The other clarifications to the computation of time rules contained in this order are, however, applicable to all Commission decisions, whether released before or after the effective date of the new rules, as they merely codify existing interpretations and practice.

8. Pursuant to sections 4(i), 4(j), 303(r), 47 U.S.C. 4(i), 4(j), 303(r), 47 CFR Part I *is amended* as set forth below, effective July 27, 2000.

List of Subjects 47 CFR Part 1

Practice and procedure.

Federal Communications Commission.

Magalie Roman Salas,

Secretary.

Rule Change

For the reasons discussed in the preamble, the Federal Communications Commission amends 47 CFR Part 1 as follows:

PART 1—PRACTICE AND PROCEDURE

1. The authority citation for Part I continues to read as follows:

Authority: Secs. 4, 303, 48 Stat. 1066, 1082, as amended; 47 U.S.C. 154, 303.

2. Section 1.4 is amended by revising the introductory text of paragraphs (b)(1) and (b)(2) and by adding a note to paragraph (b)(1) to read as follows:

§ 1.4 Computation of time.

* * * * *

(b) * * *

(1) For all documents in notice and comment and non-notice and comment rulemaking proceedings required by the Administrative Procedure Act, 5 U.S.C. 552, 553, to be published in the **Federal Register**, including summaries thereof, the date of publication in the **Federal Register**.

Note to paragraph (b)(1): Licensing and other adjudicatory decisions with respect to specific parties that may be associated with or contained in rulemaking documents are governed by the provisions of § 1.4(b)(2).

(2) For non-rulemaking documents released by the Commission or staff, including the Commission's section 271 determinations, 47 U.S.C. 271, the release date.

* * * * *

[FR Doc. 00–18899 Filed 7–26–00; 8:45 am]

BILLING CODE 6712–01–P

FEDERAL COMMUNICATIONS COMMISSION

47 CFR Part 24

[WT Docket No. 95–157, RM–8643; FCC 00–123]

Amendment of the Commission's Rules Regarding a Plan for Sharing the Costs of Microwave Relocation; Petitions for Reconsideration

AGENCY: Federal Communications Commission.

ACTION: Final rule; petition for reconsideration.

SUMMARY: In this document, the Commission clarifies certain aspects of its rules governing the relocation of microwave facilities from the 1850–1990 Megahertz (MHz) band. These rule clarifications are consistent with the Commission's goal of ensuring the efficient relocation of fixed microwave incumbents from the 1850–1990 MHz band to higher bands and the efficient rollout of broadband PCS service in the 1850–1990 MHz band.

DATES: Effective August 28, 2000.

FOR FURTHER INFORMATION CONTACT: Joel Taubenblatt, Wireless Telecommunications Bureau, Commercial Wireless Division, at (202) 418–1513.

SUPPLEMENTARY INFORMATION: This is a summary of the Commission's Memorandum Opinion and Order on Reconsideration (MO&O) in WT Docket No. 95–157, adopted April 5, 2000, and released July 19, 2000. In this document, the Commission addresses petitions for reconsideration and/or clarification of, and a petition for declaratory ruling concerning, the Commission's rules governing the relocation of microwave facilities from the 1850–1990 Megahertz (MHz) band. The Commission clarifies certain aspects of these rules, as discussed below, and denied the remaining requests in the petitions.

2. In 1992, the Commission reserved 220 megahertz of spectrum, including the 1850–1990 MHz band, for reallocation from private and common carrier fixed microwave services (microwave incumbents) to services using emerging technologies. The Commission also established procedures for microwave incumbents to be

relocated to available frequencies in higher bands or to other media, including procedures governing the compensation of microwave incumbents by providers of emerging technology services. In 1994, the Commission allocated the 1850–1990 MHz band to broadband Personal Communications Services (PCS), one of the emerging technology services.

3. In the *First Report and Order* in this proceeding, 61 FR 29679 (June 12, 1996), the Commission changed and clarified certain aspects of its microwave relocation procedures and adopted a plan for sharing the costs of relocating microwave facilities operating in the broadband PCS band (the ''cost-sharing plan''). Under the Commission's cost-sharing plan, PCS licensees and manufacturers of unlicensed PCS devices that incur costs for relocating an interfering microwave link (together, ''PCS relocators'') are eligible to receive reimbursement from later-entrant PCS licensees and later-entrant manufacturers of unlicensed PCS devices that benefit from the clearing of their spectrum (together, ''later-entrant PCS entities''). The cost-sharing plan is administered by two private clearinghouses designated by the Wireless Telecommunications Bureau (WTB)—the Personal Communications Industry Association (PCIA) and the Industrial Telecommunications Associations, Inc. (ITA)—using the cost-sharing formula adopted by the Commission.

4. In the *Second Report and Order* in this proceeding, 62 FR 12752 (March 18, 1997), the Commission, among other things, modified its cost-sharing rules to permit microwave incumbents who relocate their own microwave links and pay their own relocation expenses (''self-relocating microwave incumbents'') to collect reimbursement in accordance with the cost-sharing plan adopted in the *First Report and Order,* subject to certain conditions.

5. Ten parties filed petitions for reconsideration or clarification of the *First Report and Order,* one party filed a petition for declaratory ruling concerning the *First Report and Order,* and three parties filed petitions for reconsideration and clarification of the *Second Report and Order.*

6. This document denies the petitions for reconsideration and/or clarification of the *First Report and Order* because it finds that: (1) with respect to the MSS Coalition petition, the concerns raised by the petitioner regarding the applicability of the microwave relocation and cost-sharing rules to the 2 GHz non-PCS bands were raised and considered in another Commission rulemaking; (2) with respect to the other petitions, any potential benefit of the suggested changes to the Commission's cost-sharing rules is outweighed by the risk of undermining the integrity of the relocation process by altering rules relied upon by the parties involved in the process.

7. This document also declines to make a declaratory ruling that a later-entrant PCS licensee is not obligated to reimburse a PCS relocator for the cost of relocating a link that is entirely within the PCS relocator's MTA or BTA, as requested by Powertel, because it finds that § 24.247 of the Commission's rules dictates a different result.

8. In addition, with respect to the petitions for reconsideration and/or clarification of the *Second Report and Order,* this document clarifies that: (1) microwave incumbents that self-relocated links between April 5, 1995 and May 19, 1997 are not entitled to reimbursement; (2) microwave incumbents are permitted to relocate to leased facilities, as well as purchased facilities; (3) the date that the depreciation factor begins to apply to the amount reimbursable to a microwave incumbent for its self-relocated links is the date that the incumbent notifies the Commission that it intends to discontinue, or has discontinued, the use of these links, pursuant to § 101.305 of the Commission's rules; (4) the deadline for self-relocating microwave incumbents to file documentation of the relocation with the clearinghouse shall be within ten business days of the date referred to in the preceding clause; and (5) under the cost-sharing formula as applied to self-relocating microwave incumbents, the variable N equals 1 for the first PCS entity that would have interfered with the relocated link. This document denies the remaining requests in the petitions for reconsideration and/or clarification of the *First Report and Order* and *Second Report and Order* in this proceeding.

9. The complete text of this *MO&O* is available for inspection and copying during normal business hours in the Commission's Reference Center, Room CY–A257, 445 12th Street SW, Washington, DC. The complete text is also available through the Internet at *http://www.fcc.gov/Bureaus/Wireless/Orders/2000/fcc00123.doc.* In addition, the complete text may be purchased from the Commission's duplicating contractor, International Transcription Service, Inc. (ITS, Inc.) at 1231 20th Street NW, Washington, DC 10036, (202) 857–3800.

Supplemental Final Regulatory Flexibility Analysis

10. As required by the Regulatory Flexibility Act (RFA), *see* 5 U.S.C. 603, an Initial Regulatory Flexibility Analysis (IRFA) was incorporated in the Notice of Proposed Rulemaking (NPRM) in WT Docket No. 95–157, 60 FR 55529 (November 1, 1995). The Commission sought written public comment on the proposals in the *NPRM,* including the IRFA. A Final Regulatory Flexibility Analysis (FRFA) was incorporated in the *First Report and Order* in WT Docket No. 95–157, 61 FR 29679 (June 12, 1996). The *First Report and Order* also included a Further Notice of Proposed Rulemaking (Further Notice), and thus incorporated an IRFA on the additional proposals in the *Further Notice,* 61 FR 29679 (June 12, 1996). The Commission sought written public comment on the additional proposals in the *Further Notice,* including the IRFA. A FRFA on the additional proposals in the *Further Notice* was incorporated in the *Second Report and Order* in WT Docket No. 95–157, 62 FR 12752 (March 18, 1997). The present Supplemental Final Regulatory Flexibility Analysis in this document supplements the FRFAs in the *First Report and Order* and *Second Report and Order,* and conforms to the RFA, as amended.

A. Need for, and Objectives of, the Rules

10. This document addresses petitions for reconsideration and/or clarification of, and a petition for declaratory ruling, concerning the Commission's plan for PCS market entrants to share the costs of relocating microwave facilities from the 1850–1990 MHz band. Under the Commission's cost-sharing plan, PCS licensees and manufacturers of unlicensed PCS devices that incur costs for relocating an interfering microwave link (together, ''PCS relocators'') are eligible to receive reimbursement from later-entrant PCS licensees or later-entrant manufacturers of unlicensed PCS devices that benefit from the clearing of their spectrum (together, ''later-entrant PCS entities''). In addition, the cost-sharing plan permits microwave incumbents who relocate their own microwave links and pay their own relocation expenses (''self-relocating microwave incumbents'') to collect reimbursement from later-entrant PCS entities that benefit from the clearing of the spectrum, subject to certain conditions. This document clarifies certain aspects of this cost-sharing plan, as discussed below, and denies the remaining requests in the petitions, including a request to eliminate the installment payment plan

for designated entity reimbursement obligations. These clarifications will facilitate the efficient relocation of fixed microwave incumbents from the 1850–1990 MHz band in order to clear the band for the provision of PCS service.

11. In particular, the document clarifies that: (1) the Proximity Threshold test set forth in § 24.247 of the Commission's rules, 47 CFR 24.247, controls when a reimbursement obligation exists for a later-entrant PCS licensee; (2) microwave incumbents that self-relocated links between April 5, 1995 and May 19, 1997 are not entitled to reimbursement; (3) microwave incumbents are permitted to relocate to leased facilities, as well as purchased facilities; (4) the date that the depreciation factor begins to apply to the amount reimbursable to a microwave incumbent for its self-relocated links is the date that the incumbent notifies the Commission that it intends to discontinue, or has discontinued, the use of these links, pursuant to § 101.305 of the Commission's rules, 47 CFR 101.305; (5) the deadline for self-relocating microwave incumbents to file documentation of the relocation with the clearinghouse shall be within ten business days of the date referred to in the preceding clause; and (6) under the cost-sharing formula as applied to self-relocating microwave incumbents, the variable N equals 1 for the first PCS entity that would have interfered with the relocated link.

B. Summary of Issues Raised in Response to the FRFAs

12. None of the petitions filed on the *First Report and Order* and *Second Report and Order,* or comments filed on these petitions, were specifically in response to the FRFAs in those orders. Several of the petitions and comments regarding the *First Report and Order,* though, raised issues that may impact small entities, and were considered by the Commission, as discussed in Section E below. In particular, Tenneco Energy argues that the Commission should eliminate the payment plan that permits PCS providers that are designated entities (a small business classification used for Commission spectrum auctions) to make reimbursement payments in installments over time, as set forth in § 24.249(b) of the Commission's rules, 24 CFR 24.249(b). Omnipoint and PCIA oppose Tenneco's argument. Moreover, Omnipoint contends that, although it does not qualify as a designated entity under the Commission's rules, it should be permitted to make reimbursement payments according to the installment plan schedule set forth in § 24.249(b).

13. Small Business in Telecommunications (SBT) argues that the Commission should refine its definitions of communications throughput and network reliability in evaluating whether a microwave incumbent's new system is comparable to the old one, and that the Commission should require PCS providers to compensate microwave incumbent's for internal resources devoted to the relocation process. Other fixed microwave incumbents, such as the Association of American Railroads, support a refinement of the definitions of throughput and reliability, whereas PCS providers such as AT&T, Omnipoint, and Pacific Bell, oppose such a refinement. In addition, AT&T opposes SBT's suggested modification to include internal resources in compensation.

C. Description and Estimate of the Number of Small Entities to Which the Rules Will Apply

14. The RFA directs agencies to provide a description of and, where feasible, an estimate of the number of small entities that may be affected by the proposed rules, if adopted. 5 U.S.C. 603(b)(3). The RFA generally defines the term ''small entity'' as having the same meaning as the terms ''small business,'' ''small organization,'' and ''small governmental jurisdiction.'' In addition, the term ''small business'' has the same meaning as the term ''small business concern'' under the Small Business Act. 15 U.S.C. 632. A small business concern is one which: (1) Is independently owned and operated; (2) is not dominant in its field of operation; and (3) satisfies any additional criteria established by the Small Business Administration (SBA). *Id.* A small organization is generally ''any not-for-profit enterprise which is independently owned and operated and is not dominant in its field.'' 5 U.S.C. 601(4). Nationwide, as of 1992, there were approximately 275,801 small organizations. ''Small governmental jurisdiction'' generally means ''governments of cities, counties, towns, townships, villages, school districts, or special districts, with a population of less than 50,000.'' 5 U.S.C. 601(5). As of 1992, there were approximately 85,006 such jurisdictions in the United States. This number includes 38,978 counties, cities, and towns; of these, 37,566, or 96 percent, have populations of fewer than 50,000. The Census Bureau estimates that this ratio is approximately accurate for all governmental entities. Thus, of the 85,006 governmental entities, we estimate that 81,600 (96 percent) are small entities. Below, we further describe and estimate the number of small entity licensees and regulatees that will be affected by the rule clarifications adopted in this document.

15. The rule clarifications adopted in this document will affect small entities that participate in the microwave relocation process in the 1850 MHz to 1990 MHz band: providers of broadband personal communications service (PCS); providers of fixed microwave services; and manufacturers of unlicensed PCS devices.

16. *Broadband Personal Communications Service (PCS).* The broadband PCS spectrum is divided into six frequency blocks designated A through F, and the Commission has held auctions for each block. The Commission defined ''small entity'' for Blocks C and F as an entity that has average gross revenues of less than $40 million in the three previous calendar years. For Block F, an additional classification for ''very small business'' was added and is defined as an entity that, together with their affiliates, has average gross revenues of not more than $15 million for the preceding three calendar years. These regulations defining ''small entity'' in the context of broadband PCS auctions have been approved by the SBA. No small businesses within the SBA-approved definition bid successfully for licenses in Blocks A and B. There were 90 winning bidders that qualified as small entities in the Block C auctions. A total of 93 small and very small business bidders won approximately 40% of the 1,479 licenses for Blocks D, E, and F. However, licenses for Blocks C through F have not been awarded fully; therefore, there are few, if any, small businesses currently providing PCS services. Based on this information, we estimate that the number of small broadband PCS licensees will include the 90 winning C Block bidders and the 93 qualifying bidders in the D, E, and F blocks, for a total of 183 small entity PCS providers as defined by the SBA and the Commission's auction rules.

17. *Fixed Microwave Services.* The Commission has not yet defined a small business with respect to microwave services. For purposes of this IRFA, we will utilize the SBA's definition applicable to radiotelephone companies—*i.e.,* an entity with no more than 1,500 persons. 13 CFR 121.201, Standard Industrial Classification (SIC) 4812. The Commission's Office of Engineering and Technology developed a study in 1992 that provides statistical data for all microwave incumbents in 1850 to 1990 MHz band. Specifically,

the study finds that in the 1850 MHz to 1990 MHz band, local governments, including public safety entities, have 168 licenses; petroleum companies have 67 licenses; power companies have 164 licenses; railroad companies have 18 licenses; and all other microwave incumbents in this band have 143 licenses. However, the Commission does not have specific statistics that determine how many of these companies are small businesses. We therefore are unable to estimate the number of fixed microwave service providers that qualify under the SBA's definition.

18. *Manufacturers of Unlicensed PCS Devices.* The Commission has not yet developed a definition of small entities applicable to manufacturers of unlicensed PCS devices. Therefore, the applicable definition of small entity is the definition under the SBA applicable to the ''Communications Services, Not Elsewhere'' category—an entity with less than $11.0 million in annual receipts. 13 CFR 121.201, SIC Code 4899. The Census Bureau estimate indicate that of the 848 firms in the ''Communications Services, Not Elsewhere'' category, 775 are small businesses. The Commission does not have specific statistics, though, on how many of these 775 small businesses are manufacturers of unlicensed PCS devices.

D. Description of Projected Reporting, Recordkeeping, and Other Compliance Requirements

19. This document does not contain any additional reporting or recordkeeping requirements. The document does clarify several aspects of the Commission's cost-sharing plan for microwave relocation, as discussed in Section A above, but these clarifications do not create new compliance obligations.

E. Steps Taken To Minimize Significant Economic Impact on Small Entities, and Significant Alternatives Considered

20. This document clarifies certain aspects of the Commission's plan for PCS market entrants to share the costs of relocating microwave facilities from the 1850–1990 MHz band, as discussed in Section A above. Under the Commission's cost-sharing plan, PCS relocators and self-relocating fixed microwave incumbents that pay for the relocation of microwave links are entitled to reimbursement from later-entrant PCS entities that benefit from the clearing of the spectrum. A number of the clarifications set forth in this document will affect the amount of reimbursement that a PCS relocator or self-relocating microwave incumbent is entitled to receive under the plan and, conversely, the amount of reimbursement that a later-entrant PCS entity is obligated to pay. In some cases, the clarifications will result in an increase in reimbursement, to the benefit of the PCS relocator or self-relocating microwave incumbent; in other cases, the clarifications will result in a decrease in reimbursement, to the benefit of the later-entrant PCS entity. Because some entities on both sides of the reimbursement equation are small businesses, we do not believe that, on the whole, these clarifications to the cost-sharing plan will have a significant economic impact on small businesses. We do believe that these clarifications will make it easier for the affected regulated entities to comply with our cost-sharing rules and, to some extent, reduce the staff resources needed to handle compliance, a result that is especially beneficial for small businesses.

21. This document also denies the remaining requests in the petitions (retaining the status quo), including the requests by Tenneco, Omnipoint, and SBT set forth in Section B above. We believe that the remaining requests would require changes in the cost-sharing rules that might undermine the integrity of the rules that PCS relocators, later-entrant PCS entities, and microwave incumbents have relied on since 1996 to effect the relocation from these bands. Thus, as discussed in paragraph 8 of the document, we conclude that granting these remaining requests would not significantly advance our goal of promoting an efficient and equitable relocation process as to outweigh the risks associated with such rule changes.

F. Report to Congress

22. The Commission will send a copy of this document, including this Supplemental FRFA, in a report to be sent to Congress pursuant to the Small Business Regulatory Enforcement Fairness Act of 1996, *see* 5 U.S.C. 801(a)(1)(A). In addition, the Commission will send a copy of this document, including this Supplemental FRFA, to the Chief Counsel for Advocacy of the Small Business Administration. A copy of this document and this Supplemental FRFA (or summaries thereof) will also be published in the **Federal Register**. *See* 5 U.S.C. 604(b).

G. Ordering Clauses

23. Accordingly, pursuant to the authority of § 1.106 of the Commission's rules, 47 CFR 1.106, the petitions for reconsideration and/or clarification of the First Report and Order filed by the American Petroleum Institute, the Association of American Railroads, the Association of Public-Safety Communications Officials-International, Inc, AT&T Wireless Services, Inc. (jointly with GTE Mobilnet, PCS PrimeCo, L.P., Pocket Communications, Inc., Western PCS Corporation and the Cellular Telecommunications Industry Association), the MSS Coalition, Omnipoint Communications, Inc., the Personal Communications Industry Association, Small Business in Telecommunications, Tenneco Energy, and UTC/The Telecommunications Association are denied, as discussed in paragraph 6 *supra.*

24. Pursuant to the authority of § 1.2 of the Commission's rules, 47 CFR § 1.2, the petition for declaratory ruling concerning the First Report and Order filed by Powertel PCS, Inc. is denied, as discussed in paragraph 7 *supra.*

25. Pursuant to the authority of § 1.106 of the Commission's rules, 47 CFR 1.106, the petitions for reconsideration and/or clarification of the Second Report and Order filed by American Petroleum Institute, UTC/The Telecommunications Association, and the South Carolina Public Service Authority are granted in part and denied in part, as discussed in paragraph 8 *supra.*

26. Pursuant to the authority of §§ 24.243 and 24.245 of the Commission's rules, 47 CFR 24.243, 24.245, are amended as set forth in the rule changes which are to become August 28, 2000.

27. It is further ordered that the Commission's Consumer Information Bureau, Reference Information Center, shall send a copy of this Memorandum Opinion and Order on Reconsideration, including the Supplemental Final Regulatory Flexibility Analysis to the Chief Counsel for Advocacy of the Small Business Administration.

List of Subjects in 47 CFR Part 24

Personal communications services, Radio.

Federal Communications Commission.

Magalie Roman Salas,

Secretary.

Rule Changes

For the reasons discussed in the preamble, the Federal Communications Commission amends 47 CFR part 24 as follows:

PART 24—PERSONAL COMMUNICATIONS SERVICES

1. The authority citation for part 24 continues to read as follows:

Authority: 47 U.S.C. 154, 301, 302, 303, 309, and 332.

2. Section 24.243 is amended by revising paragraphs (c) and (d) to read as follows:

§ 24.243 The cost-sharing formula.

* * * * *

(c) *N* equals the number of PCS entities that would have interfered with the link. For the PCS relocator, N=1. For the next PCS entity that would have interfered with the link, N=2, and so on. In the case of a voluntarily relocating microwave incumbent, N=1 for the first PCS entity that would have interfered with the link. For the next PCS entity that would have interfered with the link, N=2, and so on.

(d) *Tm* equals the number of months that have elapsed between the month the PCS relocator or voluntarily relocating microwave incumbent obtains reimbursement rights for the link and the month that the clearinghouse notifies a later-entrant of its reimbursement obligation for the link. A PCS relocator obtains reimbursement rights for the link on the date that it signs a relocation agreement with a microwave incumbent. A voluntarily relocating microwave incumbent obtains reimbursement rights for the link on the date that the incumbent notifies the Commission that it intends to discontinue, or has discontinued, the use of the link, pursuant to § 101.305 of the Commission's rules.

3. Section 24.245 is amended by revising paragraph (a)(2) to read as follows:

§ 24.245 Reimbursement under the cost-sharing plan.

(a) * * *

(2) To obtain reimbursement, a voluntarily relocating microwave incumbent must submit documentation of the relocation of the link to the clearinghouse within ten business days of the date that the incumbent notifies the Commission that it intends to discontinue, or has discontinued, the use of the link, pursuant to § 101.305 of the Commission's rules.

* * * * *

[FR Doc. 00–18955 Filed 9–26–00; 8:45 am]

BILLING CODE 6712–01–P

Proposed Rules

Federal Register
Vol. 65, No. 145
Thursday, July 27, 2000

This section of the FEDERAL REGISTER contains notices to the public of the proposed issuance of rules and regulations. The purpose of these notices is to give interested persons an opportunity to participate in the rule making prior to the adoption of the final rules.

DEPARTMENT OF AGRICULTURE

7 CFR Part 51

[Docket Number FV–99–302]

RIN 0581–AB63

Withdrawal of Proposed Rule for Fee Increase for Destination Market Inspections of Fresh Fruits, Vegetables and Other Products

AGENCY: Agricultural Marketing Service (AMS), USDA.

ACTION: Proposed rule: withdrawal.

SUMMARY: AMS is withdrawing a proposed rule published in the **Federal Register** on September 20, 1999 (64 FR 50774). The proposed rule would have revised the regulations governing the inspection and certification for fresh fruits, vegetables and other products by increasing by approximately 14 percent most of the fees charged for the inspection of these products at destination markets. The fees for inspecting multiple lots of the same product during inspections would have increased more significantly and the per package fees for dock-side inspections would have increased and changed from a three interval schedule, based on weight, to a two interval schedule based on different weight thresholds. These revisions were necessary in order to recover, as nearly as practicable, the costs of performing inspection services at destination markets under the Agricultural Marketing Act of 1946 (AMA of 1946). The fees charged to persons required to have inspections on imported commodities in accordance with the Agricultural Marketing Agreement Act of 1937 and for imported peanuts under the Agricultural Act of 1949 also would have been affected.

DATES: The proposed rule is withdrawn as of July 28, 2000.

ADDRESSES: Supporting information used in developing the proposed rule, including comments received during the period for public comment on the proposed rule, are available for public inspection and copy at the Fresh Products Branch Docket File at USDA, AMS, FVP, Fresh Products Branch, Room 2049 South, USDA Stop 0240, 1400 Independence Ave., SW, Washington, DC 20250–0240. For access to the Docket materials, call (202) 720–5870 between 9 a.m. and 3:30 p.m. for an appointment. A reasonable fee may be charged for copying.

FOR FURTHER INFORMATION CONTACT: Rob Huttenlocker, USDA Stop 0240, 1400 Independence Ave., SW, Washington, DC 20250–0240, or by calling (202) 720–5870.

SUPPLEMENTARY INFORMATION: The AMA of 1946 authorizes official inspection, grading and certification, on a user-fee basis, of fresh fruits, vegetables and other products such as raw nuts, Christmas trees and flowers. The AMA of 1946 provides that reasonable fees be collected from the users of the services to cover, as nearly as practicable, the costs of the services rendered. The proposed rule would have amended the schedule for fees and charges for inspection services rendered to the fresh fruit and vegetable industry to reflect the costs necessary to operate the program.

The Agricultural Marketing Service (AMS) regularly reviews its user-fee programs to determine if the fees are adequate. While the Fresh Products Branch (FPB) of the Fruit and Vegetable Programs, AMS, continues to search for opportunities to reduce its costs, the existing fee schedule would not have generated sufficient revenues to cover program costs while maintaining an adequate reserve balance. Current revenue projections for destination market inspection work during FY 99 are $13.7 million with costs projected at $13.9 million and an end-of-year reserve of $2.2 million. However, FPB's trust fund balance for this program will be approximately $2.4 million under the approximate $4.6 million deemed necessary to provide an adequate reserve balance in light of increasing program costs. Further, FPB's costs of operating the destination market program are expected to increase to approximately $14.5 million during FY 00 and to approximately $15.0 million during FY 01. These cost increases will result from inflationary increases with regard to current FPB operations and services (primarily salaries and benefits), the training and equipment required to promote improved workplace safety, and the acquisition of additional computer and related technology.

Employee salaries and benefits are major program costs that account for approximately 80 percent of FPB's total operating budget. A general and locality salary increase for Federal employees, ranging from 3.54 to 4.02 percent depending on locality, effective January 1999, significantly increased program costs. In addition, inflation also impacts FPB's non-salary costs. These factors have increased FPB's costs of operating this program by approximately $500,000 per year. In addition, a general and locality salary increase of 4.8 percent was effective in January 2000. This salary adjustment will increase FPB's costs by over $600,000 per year.

Additional revenues also were necessary in order for FPB to cover the costs of the additional staff, office space, and equipment needed in two federal market offices that were established during FY 99 (*e.g.,* Brooklyn, New York, and Oklahoma City, Oklahoma). Additional revenues also were needed to cover the costs of providing safety orientation training to FPB's personnel and purchasing safety shoes for FPB's inspection personnel. Finally, FPB needed additional funds to cover the costs of securing the equipment (*e.g.,* digital imaging cameras and computers and information systems upgrades) needed to expand FPB's services and to make existing services more efficient in the future.

Congress recently passed and, on June 20, 2000, the President signed legislation (H.R. 2559) (Public Law 106–224), authorizing appropriated funds that will make it possible for FPB to build the Terminal Market Inspection Program's reserve fund by $29 million. Congress and the President also approved an additional $11.55 million in appropriated funds that will make it possible for FPB to implement infrastructure and system improvements. These funds are appropriated for fiscal year 2001. Since Public Law 106–224 addresses the funds needed by AMS, FPB program, it is unnecessary to continue this rulemaking. Therefore, AMS withdraws the proposed rule.

Authority: 7 U.S.C. 1621–1627.

Dated: July 21, 2000.

Robert C. Keeney,

Deputy Administrator, Fruit and Vegetable Programs.

[FR Doc. 00–18964 Filed 7–26–00; 8:45 am]

BILLING CODE 3410–02–P

DEPARTMENT OF AGRICULTURE

Commodity Credit Corporation

7 CFR Part 1424

RIN 0560–AG16

Bioenergy Program

AGENCY: Commodity Credit Corporation, USDA.

ACTION: Proposed rule with request for comments.

SUMMARY: The Commodity Credit Corporation (CCC) is considering a new initiative to accelerate the development and use of bio-based technologies which would stimulate the industrial use of agricultural commodities into bio-based fuels and products. Accordingly, CCC seeks comments concerning the establishment of a bioenergy program to expand agricultural markets by promoting increased production of bioenergy through ethanol and biodiesel. Using the authority of the CCC Charter Act, which states in part, that CCC is authorized to use its general powers to ''increase domestic consumption of agricultural commodities by expanding or aiding in the expansion of domestic markets for agricultural commodities * * *'', CCC proposes to make incentive cash payments to bioenergy producers who increase their purchases of eligible agricultural commodities, as compared to the corresponding period in the prior fiscal year (FY) and convert that commodity into increased bioenergy production.

DATES: Comments on this rule must be received on or before August 28, 2000 to be assured of consideration. Comments regarding the information collection requirements of the Paperwork Reduction Act must be received on or before September 25, 2000 to be assured of consideration.

ADDRESSES: Comments should be sent to Alex King, Acting Deputy Administrator, Commodity Operations, FSA, United States Department of Agriculture (USDA), STOP 0550, 1400 Independence Avenue, SW., Washington, DC 20250–0550, telephone (202) 720–3217 or e-mail address, Alex_King@wdc.fsa.usda.gov. Persons with disabilities who require alternative means for communication for regulatory information (braille, large print, audiotape, etc.) should contact USDA's TARGET Center at (202) 720–2600 (voice and TDD).

FOR FURTHER INFORMATION CONTACT: Jim Goff, (202) 720–5396.

SUPPLEMENTARY INFORMATION:

Comments Requested

Public comments (submitted to the address above) are requested generally and specifically on the following topics in this proposed rule:

1. Producers of what forms of bioenergy should be eligible for program payments? Ethanol and biodiesel are proposed in this rule.

2. What agricultural commodities used in bioenergy production should be included in the program? This rule proposes potentially making payments on barley, corn, grain sorghum, oats, rice, wheat, soybeans, sunflower seed, canola, crambe, rapeseed, safflower, flaxseed, and mustard seed used in either ethanol or biodiesel production.

3. At what facility capacity should program payment rates change to account for plant efficiency variances by eligible program commodity? This rule proposes making larger payments to plants with under 30 million gallon per year capacity than to plants with 30 million gallon or more capacity.

4. How should payment rates be established, especially for commodities without CCC announced terminal market prices? This rule only proposes making payments to commodities with established CCC announced terminal prices.

5. When payments are limited by the budget, how should payments be distributed?

(a) Capped at a certain dollar amount or percentage of total payments. For example, no more than $X or X percent of total funds available to any one firm;

(b) Prorate payments to eligible producers over the quarter or FY; or

(c) First come, first paid basis.

This proposed rule uses a combination of all of the above by having a sign-up period before the fiscal year begins to determine a payment factor as defined in § 1424.3 and then using the payment factor on a first come, first paid basis. A payment restriction is proposed in § 1424.10.

6. Should the payment factor be capped as proposed in this rule at 100 percent ? And, if so, should the cap be 100 percent?

7. How should increases in bioenergy production be established for the various commodities receiving program payments?

8. What are the expected impacts of this program on agricultural commodity prices, fossil fuel energy prices, farm income, bioenergy production and prices, and international trade in agricultural and energy products?

Executive Order 12866

This proposed rule has been determined to be significant for the purposes of Executive Order 12866 and, therefore, has been reviewed by the Office of Management and Budget (OMB).

Regulatory Flexibility Act

It has been determined that the Regulatory Flexibility Act is not applicable to this proposed rule because CCC is not required by 5 U.S.C. 553 or any other provision of law to publish a notice of proposed rulemaking with respect to the matter of this rule.

Executive Order 12372

This program is not subject to the provisions of Executive Order 12372, which requires intergovernmental consultation with State and local officials. See the notice related to 7 CFR part 3015 subpart V published at 48 FR 29115 (June 24, 1983).

Environmental Evaluation

An environmental evaluation for this action will be completed before publication of the final rule.

Executive Order 12988

This proposed rule has been reviewed in accordance with Executive Order 12988, Civil Justice Reform. The provisions of this proposed rule do not preempt State laws, are not retroactive, and do not involve administrative appeals.

Executive Order 12612

It has been determined that this proposed rule does not have sufficient Federalism implications to warrant the preparation of a Federalism Assessment. The provisions contained in this proposed rule will not have a substantial direct effect on States or their political subdivisions or on the distribution of power and responsibilities among the various levels of government.

Unfunded Mandates Reform Act of 1995

This proposed rule contains no Federal mandates under the regulatory provisions of Title II of the Unfunded Mandates Reform Act of 1995 (UMRA) for State, local, and tribal governments or the private sector. Therefore, this rule is not subject to the requirements of

sections 202 and 205 of the UMRA regulations.

Background

To encourage bioenergy producers to expand agricultural markets by promoting increased bioenergy (ethanol and biodiesel) production, CCC, in accordance with Executive Order 13134, and the CCC Charter Act, proposes to make incentive cash payments to bioenergy producers who increase their purchases of agricultural commodities over previous FY purchases and convert that commodity into increased ethanol and biodiesel production over previous FY ethanol and biodiesel production. This rule proposes potentially making payments on barley, corn, grain sorghum, oats, rice, wheat, soybeans, sunflower seed, canola, crambe, rapeseed, safflower, flaxseed, and mustard seed used in either ethanol or biodiesel production.

Eligible bioenergy producers will receive incentive cash payments quarterly, based on the producer's total annual bioenergy production increase for the quarter compared to the same quarter in the previous FY. Quarterly payments will be reconciled with the total increase in production for the FY at the end of the fourth quarter. If, at the end of the fourth quarter, overpayments have been made, the bioenergy producer shall repay the overpayment plus interest from the date of the overpayment through the date of repayment to CCC. Eligible bioenergy producers with less than 30 million gallons annual production capacity will receive a higher payment rate than bioenergy producers with 30 million gallons or more annual production capacity to encourage the number of bioenergy producers, increase the incentive for smaller plants, and promote expansion of bioenergy production. A higher incentive is needed for smaller plants because, compared to larger plants, they tend to produce a more limited product range during refining, are less able to capture economies of scale, and may not have access to attractive risk management strategies.

Except for FY 2000, bioenergy producers will enter into annual agreements with CCC establishing their eligibility to receive program payments before October 1. Once an agreement is entered into, eligible bioenergy producers will submit quarterly applications within 30 calendar days after the end of each quarter requesting payments for the prior quarter. For example, during January 2001, producers may request payments for the period beginning October 1, 2000 through December 31, 2000. CCC would make payments to eligible bioenergy producers within 30 calendar days of receiving a complete eligible application.

It is anticipated that CCC would make available up to $100 million in FY 2000, $150 million in FY 2001, and $150 million in FY 2002. CCC expects payment requests to exceed available program funding. Therefore, producers would be required to complete an agreement during a sign-up period to be announced by CCC for each FY of the program. Eligible agreement holders would be able to submit applications for program payments after each FY quarter. Information gathered from agreement holders would be used to establish a payment factor. The payment factor would be used when funding is less than anticipated payment requests for either or both ethanol and biodiesel production by quarter during the applicable FY to fairly distribute available funding. In contrast, when sign up results in fewer requests than funding permits, a payment factor of 100 percent would be used to allocate the applicable FY's funding. Once the payment factors are established, CCC would issue payments under the program on a first application received first paid basis. For example, if funding is limited to $100 million and $250 million in agreements are approved, 70 percent from ethanol producers and 30 percent from biodiesel producers, an individual ethanol producer with an approved agreement requests a payment of $100,000 would receive $28,000 ($100,000 times 40 percent ($100 million budget divided by $250 million agreement requests) times 70 percent (ethanol factor)). Once the payment factor is established, it would be used for the entire FY. If funds are exhausted, payments would stop. Under no circumstances would previous payments be adjusted except as specified in § 1424.8(b).

As provided for in 31 U.S.C. 3720B the proposed rule provides that persons who are delinquent on other Federal debts will be ineligible for payments under this program. Also, bioenergy producers, to be eligible for this program, may have to meet additional requirements specific to the bioenergy fuel being produced. For example, to receive program payments, ethanol producers must also be licensed by the Bureau of Alcohol, Tobacco, and Firearm (BATF) for fuel ethanol production.

Paperwork Reduction Act

Title: 7 CFR 1424, Bioenergy Program.

OMB Control Number: 0560–NEW.

Type of Request: Request for approval of a new information collection.

Abstract: USDA will collect information from bioenergy producers that request payments under the Bioenergy Program as the Secretary may require to ensure the benefits are paid only to eligible bioenergy producers for eligible commodities. Bioenergy producers seeking program payments will have to meet minimum requirements by providing information concerning the production of bioenergy. Applicants must certify that they will abide by the Bioenergy Program Agreement's provisions. Burden calculations have been rounded up to nearest quarter hour.

Estimate of Respondent Burden: Public reporting burden for the collection of information is estimated to average 2 hours per response.

Respondents: U.S. bioenergy producers who use agricultural commodities to make bioenergy are eligible to receive payments.

Estimated Number of Respondents: 50.

Estimated Number of Responses per Respondent: 5 responses per year.

Estimated Total Annual Burden Hours on Respondents: 500 hours.

In addition to commenting on the substance of the regulation, the public is invited to comment on the information collection. Proposed topics include the following: (a) Whether the proposed collection of information is necessary for the proper performance of the functions of the agency, including whether the information will have practical utility; (b) the accuracy of the agency's estimate of the burden of the proposed collection of information, including the validity of the methodology and assumptions used; or (c) ways to enhance the quality, utility, and clarity of the information technology. Comments may be sent to the Desk Officer for Agriculture, Office of Information and Regulatory Affairs, OMB, Washington, DC 20503, and to Alex King, Acting Deputy Administrator, Commodity Operations, FSA, USDA, STOP 0550, 1400 Independence Avenue, SW., Washington, DC 20250–0550.

Copies of the information collection package may be obtained from Alex King, at the address listed above.

List of Subjects in 7 CFR Part 1424

Administrative practice and procedure, Energy—bioenergy, Reporting and recordkeeping requirements.

For the reasons stated in the preamble, the Commodity Credit

Corporation proposes to add 7 CFR Part 1424.

PART 1424—BIOENERGY PROGRAM

Sec.
1424.1 Applicability.
1424.2 Administration.
1424.3 Definitions.
1424.4 General eligibility rules.
1424.5 Application process.
1424.6 Eligibility determinations.
1424.7 [Reserved]
1424.8 Payment amounts.
1424.9 Reports required.
1424.10 Payment restriction.
1424.11 Maintenance and inspection of records.
1424.12 Appeals.
1424.13 Misrepresentation and scheme or device.
1424.14 OMB control numbers.

Authority: Section 5(e) of the Commodity Credit Corporation Charter Act.

§ 1424.1 Applicability.

This part establishes the Bioenergy Program (Program). It sets forth the terms and conditions a bioenergy producer must meet to obtain payments from the Commodity Credit Corporation (CCC) for eligible bioenergy production. A bioenergy producer meeting these terms and conditions may obtain payments under the Program. Additional terms and conditions are set forth in Form CCC–850, Bioenergy Program, Agreement Section.

§ 1424.2 Administration.

(a) On behalf of CCC, the Farm Service Agency (FSA), will administer the provisions of this part under the general direction and supervision of the FSA, Deputy Administrator, Commodity Operations (Deputy Administrator).

(b) The Deputy Administrator or a designee may authorize a waiver or modification of deadlines and other program requirements in cases where lateness or failure to meet such other requirements does not adversely affect the operation of the Program.

§ 1424.3 Definitions.

The definitions set forth in this section shall be applicable for all purposes of program administration under this subpart.

Agreement means the Bioenergy Program Application and Agreement, Agreement Section, Form CCC–850.

Application means the Bioenergy Program Application and Agreement, Application Section, Form CCC–850.

BATF is the Bureau of Alcohol, Tobacco and Firearms of the Department of the Treasury.

Biodiesel is a nontoxic, biodegradable replacement for or additive to petroleum diesel derived from the oils and fats of plants and animals. Chemically, biodiesel is described as a mono alkyl ester.

Biodiesel producer is a producer that produces and sells biodiesel commercially.

Bioenergy means ethanol and biodiesel produced from eligible commodities.

Conversion factor shall be:

(1) 2.5 gallons, unless otherwise determined by CCC, of ethanol produced per bushel of corn used in ethanol production

(2) 1.4 gallons, unless otherwise determined by CCC, of biodiesel per bushel of soybeans used in biodiesel production.

(3) As announced by CCC for other than above.

Eligible Commodity means barley, corn, grain sorghum, oats, rice, wheat, soybeans, sunflower seed, canola, crambe, rapeseed, safflower, flaxseed, and mustard seed or any other commodity or commodity by-product as determined and announced by CCC used in ethanol and biodiesel production which is produced in the United States and its territories.

Eligible producer means a bioenergy producer who has been determined by CCC to be eligible to receive Program payments and has entered into an Agreement with CCC .

Ethanol is anhydrous ethyl alcohol manufactured in the United States and sold:

(1) For fuel use which has been rendered unfit for beverage use in a manner and at a facility approved by the BATF for the production of ethanol for fuel, or

(2) As denatured ethanol used by blenders and refiners which is composed of 95 percent ethanol and 5 percent gasoline.

Ethanol producer is a producer that has authority from the BATF to produce ethanol.

FSA means the Farm Service Agency, USDA.

FY means fiscal year beginning each October 1 and ending September 30 of the following year.

KCCO means Kansas City Commodity Office.

Payment factor is the factor, not to exceed 100 percent, CCC establishes, based on Agreements submitted by eligible producers during the sign-up period, to reflect the percentage of funding that will go to ethanol versus biodiesel producers for the FY further adjusted for available funding. For example, if funding is limited to $100 million and $250 million in agreements are approved, 70 percent from ethanol producers and 30 percent from biodiesel producers, the payment factor for ethanol that FY will be 28 percent ($100 million budget divided by $250 million agreement submissions) times 70 percent (ethanol)). Similarly, the factor for biodiesel for the same FY will be 12 percent ($100 million budget divided by $250 million agreement submissions) times 30 percent (biodiesel factor)).

Payment rate. The payment rate CCC will use in payment calculations, based on the amount of increased eligible commodity used by eligible bioenergy producers for bioenergy production for the application quarter versus the same quarter in the previous FY, for producers that have annual bioenergy production of:

(1) Under 30 million gallons, will be 1 bushel for every 2.5 bushels of corn or soybeans used for production.

(2) 30 million gallons or more, will be 1 bushel for every 3.5 bushels of corn or soybeans used for production.

(3) Other than set forth in paragraphs (1) and (2) of this definition, as announced by CCC.

Per unit value used by CCC to determine the payment amount issued under this Agreement will be for commodities:

(1) With established terminal market prices:

(A) the applicable terminal market price announced daily by the KCCO, FSA, adjusted by the county average differential in the county in which the plant is located and the applicable quality factors. Note: The county average differential used by CCC in determining the monetary amount will be the same as that used for producers under commodity loan programs.

(B) Based on the terminal market price(s) in effect on the last day of the production quarter for which application is made.

(2) Without established terminal market prices, as announced by CCC.

Producer is a producer of bioenergy making application under this Program.

Quarter means the time periods of October 1 through December 31, January 1 through March 31, April 1 through June 30, and July 1 through September 30 each FY.

USDA means the United States Department of Agriculture.

§ 1424.4 General eligibility rules.

To obtain program payments, a producer must do all of the following:

(a) Obtain an Agreement, Form CCC–850, Bioenergy Program Application and Agreement, from the KCCO, Bulk Commodities Division, P.O. Box 419205, Kansas City, Missouri 64141–6205;

(b) Submit a completed Form CCC–850, Agreement Section, to CCC no later

than August 31 each year or a later date, if announced by CCC, to the address in paragraph (a) of this section;

(c) Be assigned an Agreement number by KCCO indicating the producer is eligible for Program payments;

(d) Maintain records indicating:

(1) Commodities for which it seeks payment;

(2) The quantity of bioenergy produced from an eligible commodity by location during the quarter compared to the same quarter in the previous FY; and

(3) The quantity of eligible commodity used to produce the bioenergy stated in paragraph (d)(2) of this section during the quarter compared to the same quarter in the previous FY;

(e) Furnish CCC such certification, and access to such records, as CCC considers necessary to verify compliance with program provisions;

(f) Once Program payments are received, continue to make Application submissions in accordance with § 1424.9;

(g) If not purchasing raw commodity input, be able to prove to CCC's satisfaction that both purchases of eligible commodities and production of bioenergy increased. Example: A producer that purchases soy oil from a soybean crushing plant for further refinement into biodiesel must be able to prove to CCC's satisfaction that both soy oil purchases and biodiesel production increased for the applicable quarter;

(h) Certify the accuracy and truthfulness of the information provided in their Agreement on Form CCC–850; and

(i) Allow verification by CCC of all information provided. Refusal to allow CCC or any other agency of USDA to verify any information provided will result in a determination of ineligibility.

§ 1424.5 Application process.

To receive payments under this program during a FY, an eligible producer must:

(a) Have an approved Agreement in accordance with § 1424.4 and an Agreement number assigned by KCCO under § 1424.4(c);

(b) Obtain an Application, Form CCC–850, Bioenergy Program Application and Agreement, Application section from the KCCO, Bulk Commodities Division, P.O. Box 419205, Kansas City, Missouri 64141–6205;

(c) Submit applications within 30 calendar days of the end of the quarter for which payment is requested. Example: Applications for the quarter January 1 through March 31, 2001, must be submitted by April 30, 2001. If the actual deadline is a non workday, the deadline will be the next business day;

(d) Submit other relevant documents as required by CCC for the specific commodity; and

(e) Certify with respect to the accuracy and truthfulness of the information provided.

§ 1424.6 Eligibility determinations.

Applicants will, after either Agreements or Applications are submitted, if:

(a) Determined eligible, receive notification of eligibility or payment, as applicable;

(b) Determined ineligible, be notified in writing of ineligibility for program participation or payment, as applicable, and reason for determination; or

(c) Additional information is needed for CCC to determine eligibility, be contacted for additional supporting documentation.

§ 1424.7 [Reserved]

§ 1424.8 Payment amounts.

(a) The monetary amount paid by CCC to eligible producers on an eligible commodity under the Program will be determined by multiplying the applicable payment rate times conversion factor times per unit value times the payment factor. Whatever the result, once a payment factor is established, it will be used for the entire FY. If funds are exhausted, payments will stop. Similarly, if payments are less than expected, remaining funds at the end of the FY will be carried over into the next FY. Under no circumstances will previous payments be adjusted except as specified in paragraph (b) of this section.

(b) Quarterly payments will be reconciled with the total increase in commodity purchases and bioenergy production for the FY at the end of the fourth quarter. If, at the end of the fourth quarter, overpayments have been made, the bioenergy producer shall repay the overpayment plus interest from the date of the overpayment through the date of repayment to CCC.

§ 1424.9 Reports required.

Once funds have been made available under this program to an eligible producer, that producer shall file Form CCC–850, Application Section, quarterly through the end of the applicable FY.

§ 1424.10 Payment restriction.

No single producer may receive more than ten percent of total FY payments for the applicable bioenergy fuel made under the program in this part for the applicable FY.

§ 1424.11 Maintenance and inspection of records.

(a) For the purpose of verifying compliance with the requirements of this part, each eligible producer shall make available at one place at all reasonable times for examination by representatives of USDA, all books, papers, records, contracts, scale tickets, settlement sheets, invoices, written price quotations, or other documents related to the program that is within the control of such entity.

(b) To facilitate examination and verification of the records and reports required by this part, copies of Form CCC–850, Bioenergy Program Application and Agreement, shall be filed in an orderly manner, and must be made available for inspection by representatives of USDA for not less than 6 years from the payment date.

§ 1424.12 Appeals.

Any person who is subject to an adverse determination made under this part shall have a right to appeal the determination by filing a written request with the Deputy Administrator at the following address:

Deputy Administrator, Commodity Operations, Farm Service Agency, United States Department of Agriculture, STOP 0550, 1400 Independence Avenue, SW., Washington, DC 20250–0550.

§ 1424.13 Misrepresentation and scheme or device.

(a) A producer shall be ineligible to receive payments under this program if CCC determines the producer:

(1) Adopted any scheme or device which tends to defeat the purpose of the program in this part;

(2) Made any fraudulent representation; or

(3) Misrepresented any fact affecting a program determination.

(b) Any funds disbursed pursuant to this part to a producer engaged in a misrepresentation, scheme, or device, or to any other person as a result of the bioenergy producer's actions, shall be refunded with interest together with such other sums as may become due, plus damages as may be determined by CCC.

(c) Interest charged under this part shall at the rate of interest which the United States Treasury charges CCC for funds, as of the date CCC made such funds available. Such interest shall accrue from the date such payments were made available to the date of repayment or the date interest increases as determined in accordance with applicable regulations.

(d) CCC may waive the accrual of interest and or damages if CCC determines that the cause of the erroneous determination was not due to any action of the bioenergy producer.

(e) Any producer or person engaged in an act prohibited by this section and any producer or person receiving payment under this part shall be jointly and severally liable for any refund due under this section and for related charges.

(f) The remedies provided in this part shall be in addition to other civil, criminal, or administrative remedies which may apply.

(g) Late payment interest shall be assessed on all refunds in accordance with the provisions of, and subject to the rates prescribed in, 7 CFR Part 1403.

§ 1424.14 OMB control numbers.

[The information collection requirements for the regulations will be submitted to OMB with the final rule.]

Signed in Washington, DC, on July 19, 2000.

Keith Kelly,

Executive Vice President, Commodity Credit Corporation.

[FR Doc. 00–18709 Filed 7–26–00; 8:45 am]

BILLING CODE 3410–05–P

DEPARTMENT OF HOUSING AND URBAN DEVELOPMENT

Office of Federal Housing Enterprise Oversight

12 CFR Chapter XVII

Notice of Safety and Soundness Regulation

AGENCY: Office of Federal Housing Enterprise Oversight, HUD.

ACTION: Notice of regulatory project.

SUMMARY: Office of Federal Housing Enterprise Oversight (OFHEO) is issuing notice of a regulatory project designed to ensure the adoption and implementation of various written policies and procedures for the supervision of Federal National Mortgage Association and the Federal Home Loan Mortgage Corporation (the ''enterprises''). In accordance with OFHEO's supervisory mandate, as established in Title XIII of the Housing and Community Development of Act of 1992, known as the Federal Housing Enterprises Financial Safety and Soundness Act of 1992, OFHEO will formalize ongoing supervisory policies and procedures that are reflected in the agency's various examination guidelines and other supervisory pronouncements, and update and revise its supervisory standards in light of market changes. The effect of this project is to enhance safety and soundness, to clarify interpretations of applicable laws and regulations, to provide greater transparency to and public understanding of the regulatory regime affecting the enterprises, and to provide a clear expression of the regulatory basis for OFHEO action in matters of supervisory concern.

FOR FURTHER INFORMATION CONTACT: Alfred M. Pollard, General Counsel, or David W. Roderer, Deputy General Counsel, Office of Federal Housing Enterprise Oversight, 1700 G. Street, NW., Fourth Floor, Washington, DC 20552, telephone (202) 414–6924 (not a toll free number). The telephone number for the Telecommunications Device for the Deaf is: (800) 877–8339.

SUPPLEMENTARY INFORMATION: The Office of Federal Housing Enterprise Oversight (OFHEO) is charged by Congress with overseeing the business conduct and financial operations of the Federal National Mortgage Association and the Federal Home Loan Mortgage Corporation in order to, among other things, ensure that they are adequately capitalized and operating safely. In furtherance of its supervisory responsibilities, the agency is empowered to adopt safety and soundness standards, to conduct examinations monitoring compliance by the enterprises with such standards, and to enforce compliance with the standards it may establish.

OFHEO has since its inception in 1993 operated under a system largely without a full complement of promulgated regulatory standards or procedures. The agency relies primarily upon the strength of its examination staff, examination guidelines and procedures, and unpublished letters. Little public recognition exists of the prudential standards under which the enterprises successfully operate. The project will produce greater transparency of OFHEO's regulatory processes and the safeguards affecting the secondary market entities. The resulting increased public awareness of the supervisory standards applicable to this critical segment of housing finance should promote enhanced market understanding of the relative strengths and viability of the enterprises.

In accordance with OFHEO's supervisory mandate under Pub. L. No. 102–550, the agency is undertaking a regulatory project designed to ensure the adoption and implementation of written policies and procedures for the enterprises that address, among other matters, (1) management responsibilities (addressing board and senior management roles and responsibilities, and minimum internal control standards for monitoring and reporting policies and procedures affecting specified subject areas); (2) risk management (formalizing quantitative and qualitative standards in appropriate areas including asset-related matters, credit risk, interest rate risk, and operational risks); (3) investments (addressing limits on types of investments and setting forth record keeping and disclosure requirements); (4) information systems security and integrity (formalizing standards and safeguards); (5) financial information disclosure (specifying applicable disclosure standards); (6) executive compensation (codifying procedures and standards for agency review of senior executive compensation and termination benefits); and, (7) enforcement policies and procedures (clarifying relevant procedures and formal and informal enforcement sanctions available to the agency).

Dated: July 20, 2000.

Armando Falcon, Jr.,

Director, Office of Federal Housing Enterprise Oversight.

[FR Doc. 00–18833 Filed 7–26–00; 8:45 am]

BILLING CODE 4220–01–U

DEPARTMENT OF TRANSPORTATION

Federal Aviation Administration

14 CFR Part 39

[Docket No. 2000–NM–179–AD]

RIN 2120–AA64

Airworthiness Directives; British Aerospace Model BAe 146 and Model Avro 146–RJ Series Airplanes

AGENCY: Federal Aviation Administration, DOT.

ACTION: Notice of proposed rulemaking (NPRM).

SUMMARY: This document proposes the supersedure of an existing airworthiness directive (AD), applicable to all British Aerospace Model BAe 146 and certain Model Avro 146–RJ series airplanes, that currently requires a one-time inspection for ''drill marks'' and corrosion on the underside of the wing top skin, and corrective actions, if necessary. This action would require a one-time inspection for ''drill marks'' and corrosion, and corrective actions, if necessary, in accordance with new procedures. For certain airplanes, this action would add a requirement for one-

time detailed visual and borescope inspections of the fuel tank, pump, and stringers for paint debris and inadequacy of the existing protective treatment coating; and corrective actions, if necessary. This proposal is prompted by issuance of mandatory continuing airworthiness information by a foreign civil airworthiness authority. The actions specified by the proposed AD are intended to prevent corrosion from developing on the underside of the top skin of the center wing, which could result in reduced structural integrity of the airplane.

DATES: Comments must be received by August 28, 2000.

ADDRESSES: Submit comments in triplicate to the Federal Aviation Administration (FAA), Transport Airplane Directorate, ANM–114, Attention: Rules Docket No. 2000–NM–179–AD, 1601 Lind Avenue, SW., Renton, Washington 98055–4056. Comments may be inspected at this location between 9 a.m. and 3 p.m., Monday through Friday, except Federal holidays. Comments may also be sent via the Internet using the following address: 9-anm-nprmcomment@faa.gov. Comments sent via the Internet must contain ''Docket No. 2000–NM–179–AD'' in the subject line and need not be submitted in triplicate. Comments sent via the Internet as attached electronic files must be formatted in Microsoft Word 97 for Windows or ASCII text.

The service information referenced in the proposed rule may be obtained from British Aerospace Regional Aircraft American Support, 13850 Mclearen Road, Herndon, Virginia 20171. This information may be examined at the FAA, Transport Airplane Directorate, 1601 Lind Avenue, SW., Renton, Washington.

FOR FURTHER INFORMATION CONTACT: Norman B. Martenson, Manager, International Branch, ANM–116, FAA, Transport Airplane Directorate, 1601 Lind Avenue, SW., Renton, Washington 98055–4056; telephone (425) 227–2110; fax (425) 227–1149.

SUPPLEMENTARY INFORMATION:

Comments Invited

Interested persons are invited to participate in the making of the proposed rule by submitting such written data, views, or arguments as they may desire. Communications shall identify the Rules Docket number and be submitted in triplicate to the address specified above. All communications received on or before the closing date for comments, specified above, will be considered before taking action on the proposed rule. The proposals contained in this notice may be changed in light of the comments received.

Submit comments using the following format:

- Organize comments issue-by-issue. For example, discuss a request to change the compliance time and a request to change the service bulletin reference as two separate issues.
- For each issue, state what specific change to the proposed AD is being requested.
- Include justification (*e.g.,* reasons or data) for each request.

Comments are specifically invited on the overall regulatory, economic, environmental, and energy aspects of the proposed rule. All comments submitted will be available, both before and after the closing date for comments, in the Rules Docket for examination by interested persons. A report summarizing each FAA-public contact concerned with the substance of this proposal will be filed in the Rules Docket.

Commenters wishing the FAA to acknowledge receipt of their comments submitted in response to this notice must submit a self-addressed, stamped postcard on which the following statement is made: ''Comments to Docket Number 2000–NM–179–AD.'' The postcard will be date stamped and returned to the commenter.

Availability of NPRMs

Any person may obtain a copy of this NPRM by submitting a request to the FAA, Transport Airplane Directorate, ANM–114, Attention: Rules Docket No. 2000–NM–179–AD, 1601 Lind Avenue, SW., Renton, Washington 98055–4056.

Discussion

On July 31, 1998, the FAA issued AD 98–16–24, amendment 39–10701 (63 FR 42220, August 7, 1998), applicable to all British Aerospace Model BAe 146 and certain Model Avro 146–RJ series airplanes, to require a one-time inspection for ''drill marks'' and corrosion on the underside of the wing top skin, and corrective actions, if necessary. That action was prompted by issuance of mandatory continuing airworthiness information by a foreign civil airworthiness authority. The requirements of that AD are intended to prevent corrosion from developing on the underside of the top skin of the center wing, which could result in reduced structural integrity of the airplane.

Actions Since Issuance of Previous Rule

Since the issuance of that AD, British Aerospace has advised that paint debris has been found within the fuel tanks of some airplanes following application of protective treatment coating in accordance with Repair Instruction Leaflet (R.I.L.) HC573H9014. British Aerospace Service Bulletin SB.57–50, Revision 2, dated March 20, 1997 (which is referenced as the appropriate source of service information in AD 98–16–24), references R.I.L. HC573H9014 for application of the protective treatment coating. Additionally, British Aerospace has now introduced a new R.I.L., which provides new and improved procedures for application of the protective treatment coating.

Explanation of Relevant Service Information

The manufacturer has issued British Aerospace Inspection Service Bulletin ISB.57–57, dated February 25, 2000. For airplanes that have not been inspected previously in accordance with AD 98–16–24, or for airplanes on which protective coating has not been previously applied in accordance with R.I.L. HC573H9014, the service bulletin describes procedures for repetitive intrascope inspections of the underside of the wing top skin for ''drill marks'' and corrosion, and corrective actions, if necessary. For airplanes on which protective coating has been previously applied in accordance with R.I.L. HC573H9014, the service bulletin describes procedures for detailed visual and borescope inspections of the fuel tank, pump, and stringers to detect discrepancies; and corrective actions, if necessary. Discrepancies include, among other things, the existence of paint debris in various areas and inadequacy of existing protective treatment coating. Corrective actions include removing paint debris, testing the paint adhesion, and applying protective treatment coating. The service bulletin references R.I.L. HC573H9032 as an additional source of service information for the application of protective treatment coating. For airplanes on which protective treatment coating is applied in accordance with British Aerospace Inspection Service Bulletin ISB.57–57, or on which the inspection for paint debris and inadequacy of the existing protective treatment coating has detected no discrepancies, the need for repetitive inspections would be eliminated.

The Civil Aviation Authority (CAA), which is the airworthiness authority for the United Kingdom, classified British Aerospace Inspection Service Bulletin ISB.57–57 as mandatory in order to assure the continued airworthiness of these airplanes in the United Kingdom.

FAA's Conclusions

These airplane models are manufactured in the United Kingdom and are type certificated for operation in the United States under the provisions of section 21.29 of the Federal Aviation Regulations (14 CFR 21.29) and the applicable bilateral airworthiness agreement. Pursuant to this bilateral airworthiness agreement, the CAA has kept the FAA informed of the situation described above. The FAA has examined the findings of the CAA, reviewed all available information, and determined that AD action is necessary for products of this type design that are certificated for operation in the United States.

Explanation of Requirements of Proposed Rule

Since an unsafe condition has been identified that is likely to exist or develop on other airplanes of the same type design registered in the United States, the proposed AD would supersede AD 98–16–24 to require a one-time inspection to detect ''drill marks'' and corrosion on the underside of the wing top skin, and corrective actions, if necessary. This action would also require, for certain airplanes, one-time detailed visual and borescope inspections of the fuel tank, pump, and stringers to detect discrepancies (including paint debris and inadequacy of existing protective treatment coating); and corrective actions, if necessary. The actions would be required to be accomplished in accordance with British Aerospace Inspection Service Bulletin ISB.57–57, except as discussed below.

Differences Between the Proposed Rule and Service Bulletin

Operators should note that, for airplanes previously inspected in accordance with AD 98–16–24, on which no protective treatment coating has been applied, Inspection Service Bulletin ISB.57–57 provides for repetitive inspections with optional terminating action (the application of treatment coating). However, for those airplanes, this proposed AD would require corrective actions including the application of protective treatment coating if any discrepancy is detected during the inspection. The FAA has determined that long-term inspections may not be providing the degree of safety assurance necessary for the transport airplane fleet. This, along with the understanding of the human factors associated with numerous continual inspections, has led the FAA to consider placing less emphasis on inspections and more emphasis on the corrective actions. This proposed requirement is in consonance with these conditions.

Additionally, operators should note that, although British Aerospace Inspection Service Bulletin ISB.57–57 specifies that the manufacturer be contacted for disposition of repair if any corrosion is detected, this proposal would require repair of any corrosion to be accomplished in accordance with a method approved by the FAA or the CAA (or its delegated agent). In light of the type of repair that would be required to address the identified unsafe condition, and in consonance with existing bilateral airworthiness agreements, the FAA has determined that, for this proposed AD, a repair approved by either the FAA or the CAA would be acceptable for compliance with this proposed AD.

While the service bulletin recommends that the inspection be completed by January 31, 2001 (one year after the service bulletin was issued), this AD would require the inspection within 6 months. In developing an appropriate compliance time for this AD, the FAA considered not only the manufacturer's recommendation, but the degree of urgency associated with addressing the subject unsafe condition, the average utilization of the affected fleet, and the time necessary to perform the inspection. In light of all of these factors, the FAA finds a 6-month compliance time for initiating the proposed actions to be warranted, in that it represents an appropriate interval of time allowable for affected airplanes to continue to operate without compromising safety.

Cost Impact

There are approximately 39 airplanes of U.S. registry that would be affected by this proposed AD.

The inspection for ''drill marks'' and corrosion that is proposed in this AD action would take approximately 10 work hours per airplane (including access and close) to accomplish, at an average labor rate of $60 per work hour. Based on these figures, the cost impact of the proposed inspection on U.S. operators is estimated to be $600 per airplane.

The inspection for paint debris and inadequacy of the existing protective treatment coating that is proposed in this AD action would take approximately 8 work hours per airplane (including access and close) to accomplish, at an average labor rate of $60 per work hour. Based on these figures, the cost impact of the proposed inspection on U.S. operators is estimated to be $480 per airplane.

The cost impact figures discussed above are based on assumptions that no operator has yet accomplished any of the proposed requirements of this AD action, and that no operator would accomplish those actions in the future if this AD were not adopted.

Regulatory Impact

The regulations proposed herein would not have a substantial direct effect on the States, on the relationship between the national Government and the States, or on the distribution of power and responsibilities among the various levels of government. Therefore, it is determined that this proposal would not have federalism implications under Executive Order 13132.

For the reasons discussed above, I certify that this proposed regulation (1) is not a ''significant regulatory action'' under Executive Order 12866; (2) is not a ''significant rule'' under the DOT Regulatory Policies and Procedures (44 FR 11034, February 26, 1979); and (3) if promulgated, will not have a significant economic impact, positive or negative, on a substantial number of small entities under the criteria of the Regulatory Flexibility Act. A copy of the draft regulatory evaluation prepared for this action is contained in the Rules Docket. A copy of it may be obtained by contacting the Rules Docket at the location provided under the caption **ADDRESSES.**

List of Subjects in 14 CFR Part 39

Air transportation, Aircraft, Aviation safety, Safety.

The Proposed Amendment

Accordingly, pursuant to the authority delegated to me by the Administrator, the Federal Aviation Administration proposes to amend part 39 of the Federal Aviation Regulations (14 CFR part 39) as follows:

PART 39—AIRWORTHINESS DIRECTIVES

1. The authority citation for part 39 continues to read as follows:

Authority: 49 U.S.C. 106(g), 40113, 44701.

§ 39.13 [Amended]

2. Section 39.13 is amended by removing amendment 39–10701 (63 FR 42220, August 7, 1998), and by adding a new airworthiness directive (AD), to read as follows:

British Aerospace Regional Aircraft (Formerly British Aerospace Regional Aircraft Limited, Avro International Aerospace Division; British Aerospace, PLC; British Aerospace Commercial Aircraft Limited): Docket 2000–NM–

179–AD. Supersedes AD 98–16–24, Amendment 39–10701.

Applicability: All Model BAe 146 series airplanes; and Model Avro 146–RJ series airplanes, as listed in British Aerospace Inspection Service Bulletin SB.57–57, dated February 25, 2000; certificated in any category.

Note 1: This AD applies to each airplane identified in the preceding applicability provision, regardless of whether it has been modified, altered, or repaired in the area subject to the requirements of this AD. For airplanes that have been modified, altered, or repaired so that the performance of the requirements of this AD is affected, the owner/operator must request approval for an alternative method of compliance in accordance with paragraph (c) of this AD. The request should include an assessment of the effect of the modification, alteration, or repair on the unsafe condition addressed by this AD; and, if the unsafe condition has not been eliminated, the request should include specific proposed actions to address it.

Compliance: Required as indicated, unless accomplished previously.

To prevent corrosion from developing on the underside of the top skin of the center wing, which could result in reduced structural integrity of the airplane, accomplish the following:

Inspection: ''Drill Marks'' and Corrosion

(a) For airplanes on which protective treatment coating has NOT been applied in accordance with British Aerospace Service Bulletin SB.57–50 [reference Repair Instruction Leaflet (R.I.L.) HC573H9014], and for airplanes on which the inspection required by AD 98–16–24, amendment 39–10701, has not been accomplished: Within 6 months after the effective date of this AD, perform a one-time intrascopic inspection for ''drill marks'' and corrosion on the underside of the wing top skin, in accordance with British Aerospace Inspection Service Bulletin ISB.57–57, dated February 25, 2000.

(1) If no ''drill mark'' or corrosion is detected, no further action is required by this AD.

(2) If any corrosion is detected, prior to further flight, repair in accordance with a method approved by either the Manager, International Branch, ANM–116, FAA, Transport Directorate; or the Civil Aviation Authority (CAA) of the United Kingdom (or its delegated agent). For a repair method to be approved by the Manager, ANM–116, International Branch, as required by this paragraph, the Manager's approval letter must specifically reference this AD.

(3) If any ''drill mark'' is detected, or if any corrosion is detected and repaired, prior to further flight, apply protective treatment coating in accordance with British Aerospace Inspection Service Bulletin ISB.57–57, dated February 25, 2000. After this application, no further action is required by this AD.

Note 2: Accomplishment of an intrascopic inspection for ''drill marks'' and corrosion prior to the effective date of this AD in accordance with British Aerospace Service Bulletin SB.57–50, Revision 2, dated March 20, 1997, is acceptable for compliance with the inspection requirements of paragraph (a) of this AD.

Inspection: Paint Debris and Inadequate Protective Coating

(b) For airplanes on which protective treatment coating HAS been applied prior to the effective date of this AD in accordance with British Aerospace Service Bulletin SB.57–50 (reference R.I.L. HC573H9014): At the next scheduled maintenance inspection (''C-check'') or within 6 months after the effective date of this AD, whichever occurs first, perform one-time detailed visual and borescope inspections of the fuel tank, pump, and stringers to detect discrepancies (including paint debris and inadequacy of existing protective treatment coating); in accordance with British Aerospace Inspection Service Bulletin ISB.57–57, dated February 25, 2000.

(1) If no discrepancy is found, no further action is required by this AD.

(2) If any discrepancy is found, prior to further flight, accomplish all applicable corrective actions (including removal of paint debris and testing of paint adhesion), and apply protective treatment coating, in accordance with British Aerospace Inspection Service Bulletin ISB.57–57, dated February 25, 2000. After this application, no further action is required by this AD.

Note 3: British Aerospace Inspection Service Bulletin ISB.57–57, dated February 25, 2000, references R.I.L. HC573H9032 as an additional source of service information for accomplishing the application of protective treatment coating.

Alternative Methods of Compliance

(c) An alternative method of compliance or adjustment of the compliance time that provides an acceptable level of safety may be used if approved by the Manager, International Branch, ANM–116. Operators shall submit their requests through an appropriate FAA Principal Maintenance Inspector, who may add comments and then send it to the Manager, International Branch, ANM–116.

Note 4: Information concerning the existence of approved alternative methods of compliance with this AD, if any, may be obtained from the International Branch, ANM–116.

Special Flight Permits

(d) Special flight permits may be issued in accordance with sections 21.197 and 21.199 of the Federal Aviation Regulations (14 CFR 21.197 and 21.199) to operate the airplane to a location where the requirements of this AD can be accomplished.

Issued in Renton, Washington, on July 21, 2000.

Donald L. Riggin,

Acting Manager, Transport Airplane Directorate, Aircraft Certification Service.

[FR Doc. 00–18996 Filed 7–26–00; 8:45 am]

BILLING CODE 4910–13–P

COMMODITY FUTURES TRADING COMMISSION

17 CFR Part 4

RIN 3038–AB60

Profile Documents for Commodity Pools

AGENCY: Commodity Futures Trading Commission.

ACTION: Proposed rule amendments.

SUMMARY: Commodity Futures Trading Commission (''Commission'') Rule 4.21(a)[1] currently requires that commodity pool operators (''CPOs'') deliver a disclosure document, containing specified information, to prospective participants before soliciting or accepting any funds, securities or other property from such participants. National Futures Association's (''NFA's'') Compliance Rule 2–35(d) would permit CPOs to deliver a shorter profile document containing only key information about the pool to prospective participants prior to providing them with the pool's Disclosure Document. Pursuant to section 17(j) of the Commodity Exchange Act[2] (''Act''), NFA has requested that the Commission review NFA Compliance Rule 2–35(d) and its Interpretive Notice regarding profile documents for commodity pools. NFA has also submitted a petition for rulemaking which requests that the Commission amend Rule 4.21(a) to permit use of the profile. The amendment to Commission Rule 4.21(a) proposed herein will be necessary to allow commodity pool operators (''CPOs'') to use a profile document. The Commission is also proposing amendments to Commission Rule 4.26 to establish procedures for the use, amendment and filing of profile documents that are parallel to those applicable to disclosure documents.

In addition, certain technical amendments related to filings by CPOs and commodity trading advisors (''CTAs'') are proposed. The primary change would decrease regulatory burden by reducing the number of copies of disclosure documents that CPOs and CTAs must file with the Commission. The Commission is also proposing to revise Rule 4.2(a), which permits that disclosure documents may be filed electronically, to expand the availability of electronic filing to profile documents. Technical amendments to Rule 4.2(a) would correct the address

[1] Commission rules referred to herein can be found at 17 CFR Ch. I (2000).

[2] 7 U.S.C. 21(j) (1994).

specified for hard copy filing and specify the address for electronic filing.

DATES: Comments must be received by August 28, 2000.

ADDRESSES: Interested persons should submit their views and comments to Jean A. Webb, Secretary of the Commission, Commodity Futures Trading Commission, 1155 21st Street, NW., Washington, DC 20581. In addition, comments may be sent by facsimile transmission to facsimile number (202) 418–5521, or by electronic mail to secretary@cftc.gov. Reference should be made to ''Profile Documents for Commodity Pools.''

FOR FURTHER INFORMATION CONTACT: Eileen R. Chotiner, Futures Trading Specialist, Division of Trading and Markets, Commodity Futures Trading Commission, 1155 21st Street, NW., Washington, DC 20581. Telephone: (202) 418–5467; electronic mail: ''echotiner@cftc.gov.''

SUPPLEMENTARY INFORMATION:

I. Rule 4.21(a)

Commission Rule 4.21(a) requires that CPOs deliver a disclosure document, containing specified information, to prospective participants before soliciting or accepting any funds, securities or other property from such participants. [3] Currently, the rule permits a CPO to provide a more summary disclosure (a ''Term Sheet'') prior to the delivery of a disclosure document, in the form of a notice of intended offering and a statement of the terms of such offering. A Term Sheet may only be delivered to ''accredited investors,'' [4] subject to rules promulgated by a registered futures association pursuant to Section 17(j) of the Act. In 1996, the Commission approved amendments to NFA Compliance Rule 2–13 implementing provisions for the Term Sheet.[5]

By letter dated March 7, 2000,[6] NFA submitted to the Commission for its review and approval, pursuant to Section 17(j) of the Act, NFA Compliance Rule 2–35(d) and its Interpretive Notice regarding commodity pool profile documents. The use of profile documents would not be limited to accredited investors. The profile document is based on a rule adopted by the Securities and Exchange Commission (''SEC'') that permits mutual funds to solicit and accept investments using a shorter ''profile'' document instead of a prospectus. [7] NFA also submitted a petition for rulemaking to amend Commission Rule 4.21(a) in order to allow a profile document to be delivered, in advance of the pool's disclosure document, to potential participants, whether or not they are accredited investors. CPOs who wish to use a profile document would be required to do so in accordance with the rules of a registered futures association, such as NFA Compliance Rule 2–35(d).

The purpose of the profile document is to provide prospective participants with succinct disclosure of the key aspects of a commodity pool offering in an easily accessible format. A more accessible disclosure format is more likely to be read and therefore more likely to be useful to a person considering a commodity pool investment. The Commission believes that the benefits of a profile document are no less applicable to prospective pool participants who are not accredited investors. Therefore, the Commission is proposing to expand Rule 4.21(a) to allow CPOs to provide all prospective participants with a profile document prior to delivery of a Disclosure Document, subject to compliance with rules promulgated by a registered futures association pursuant to Section 17(j) of the Commodity Exchange Act (''Act'').[8]

II. Background

In September 1998, the Commission approved NFA Compliance Rules 2–35(a)–(c), which require that disclosure documents be presented in a two-part format, and that they be prepared using ''plain English'' principles.[9] The Commission also adopted corresponding changes to Commission Rules 4.24 and 4.25. These changes are intended to make commodity pool documents more understandable. NFA's Interpretive Notice to the two-part document rule states that ''[a] Disclosure Document should provide essential information about the fundamental characteristics of a pool, and it should provide the information in a way that will assist investors in making informed decisions about whether to invest in the pool.'' [10]

In approving these NFA rules, the Commission noted that ''* * * the adoption of a two-part document format and plain English principles will assist investors in making an informed decision prior to investing in a pool by providing clear and concise information about the possible investment.'' [11] The Commission believes that the profile document described in NFA Rule 2–35(d) would further enhance the ability of prospective participants to evaluate the key characteristics of commodity pools prior to making investment decisions. Because the profile document must be followed with a complete disclosure document prior to the CPO's acceptance of any funds or property from a prospective pool participant, participants will receive all required

[3] A publicly offered commodity pool refers to a distribution of units, some or all of which are registered under the Securities Act of 1933 (''Securities Act''). Commission Rule 4.24(d)(3)(i) defines ''privately offered'' commodity pools as those ''offered pursuant to section 4(2) of the Securities Act of 1933, as amended (15 U.S.C. 77d(2)), or pursuant to Regulation D thereunder (17 CFR 230.501 *et seq.*).'' Section 4(2) of the Securities Act exempts from registration transactions by an issuer not involving any public offering; Regulation D contains rules for the limited offer and sale of securities without registration under the Securities Act.

[4] The term ''accredited investor'' is defined in 17 CFR 230.501(a).

[5] NFA Compliance Rule 2–13(d) requires the notice of intended offering and statement of terms to include ''no more than'' the following information:

(1) The name of the CPO, issuer, underwriter, and selling agent;

(2) The name of the pool;

(3) The title, amount, minimum escrow, and basic terms of the equity interests the CPO proposes to offer;

(4) The date the offering begins, how long it will remain open and a brief statement of the manner of the offering;

(5) The type of pool (multi-advisor, single-advisor, principal-protected, speculative, hedge) and interests to be traded and, if a single-advisor pool, the name of the CTA;

(6) Any limitations regarding who may invest in the pool or the amount of any investment;

(7) Any statement or legend required by any applicable laws, regulations, or rules or by any state, federal or foreign regulator; and

(8) The name and address and/or telephone number to obtain a copy of the disclosure document.

[6] Prior versions of the proposal, which were submitted in letters dated September 10, 1998 and April 13, 1999, were withdrawn by NFA on October 27, 1999.

[7] 17 CFR 230.498. SEC Rule 498 permits profile documents to be used only by open-end management investment companies that register on Form N–1A (17 CFR 274.11A). The SEC noted in its adopting release that it would assess the use of profiles by mutual funds over a period of time before considering a rule to permit use of profiles by other types of investment companies.

[8] CPOs would continue to have the option to provide a notice of intended offering and term sheet to accredited investors.

[9] NFA's Interpretive Notice to Rule 2–35(a)–(c) provides guidance on what is meant by the use of ''plain English principles.'' Such principles include: using active voice; using short sentences and paragraphs; breaking up the document into short sections; using titles and subtitles that specifically describe the contents of each section; using words that are definite, concrete, and part of everyday language; avoiding legal jargon and highly technical terms; using glossaries to define technical terms that cannot be avoided; avoiding multiple negatives; and using tables and bullet lists, where appropriate.

[10] NFA Interpretive Notice ¶9035, Compliance Rule 2–35: Guidelines for Filing Two-Part Disclosure Documents for Commodity Pools (board of Directors, April 30, 1999).

[11] 63 FR 15112, 15114 (March 30, 1998).

disclosure about the offered pool before committing their funds.

III. Description of NFA Compliance Rule 2–35(d)

Rule 2–35(d) would permit CPOs to deliver a profile document, containing key information about a commodity pool, to a prospective participant prior to delivery of the pool's disclosure document. The profile document must clearly state that an investment in the pool may not be made until after the prospective participant has received the pool's disclosure document. Further, the profile may not be accompanied by any advertising or other promotional material unless also accompanied by the pool's disclosure document.

The profile is required to include key information about the pool, such as: The risks of participating in commodity pools, and any specific risks that are material to the particular pool; a break-even analysis that reflects all fees and expenses of the pool; a discussion of the pool's trading strategy; any conflicts of interest material to the pool; a summary of any material actions against the CPO and its principals within the past five years; a brief description of the pool's redemption policies; and the performance of the offered pool. No information other than that specified in Rule 2–35(d) may be included in the profile. Rule 2–35(d) also specifies that the profile document is subject to the filing requirements of CFTC Rule 4.26 and must be submitted with the pool's disclosure document.

NFA is also proposing to issue a new Interpretive Notice to Rule 2–35(d) regarding CPO profile documents. The Interpretive Notice provides further guidance as to the types of risk factors and conflicts of interest that should be discussed in the profile document.

IV. Related Changes to Commission Rules 4.2 and 4.26

Pursuant to Rule 4.26, a CPO may use a disclosure document for nine months from its date of first use, must amend the document if it is materially inaccurate or incomplete and distribute the changes to existing and previously solicited prospective participants, and must file the disclosure document and amendments thereto with the Commission. The Commission is proposing to revise Rule 4.26 to establish the same requirements for profile documents. The Commission is also proposing to revise Rule 4.2(a) to permit profile documents to be filed electronically along with the disclosure documents to which they pertain. The proposed changes to Rules 4.2(a) and 4.26(d) would incorporate the requirement in NFA Rule 2–35(d) that the profile document be filed along with the disclosure document.

V. Technical Changes

In order to reduce regulatory burden for CPOs and CTAs, the Commission is proposing to amend Rules 4.26 and 4.36 to reduce the number of copies of the Disclosure Document that must be filed with the Commission by CPOs and CTAs. The proposed changes would require that only one copy of each disclosure document be filed with the Commission, rather than the two copies currently required by these rules. A single copy of the profile document, if one is used, would be required to be filed with the CPO's disclosure document for the applicable pool. The only proposed rule revision that is applicable to CTAs is the proposed reduction in the number of copies of disclosure documents that CTAs must file with the Commission under Rule 4.36(d).[12]

Technical changes to Rule 4.2(a) are also proposed to correct the address to which hard copy filings must be sent and to specify the e-mail address for electronic filings.

VI. Additional Request for Comment

The amendments to Rules 4.2(a), 4.21(a) and 4.26 that are related to use of a profile document are being proposed to enable the Commission to approve NFA Compliance Rule 2–35(d). Accordingly, the Commission seeks comments both on the proposed amendments to the Commission's rules for the purpose of permitting profile documents for CPOs and clarifying procedures for their use, amendment and filing, as well as comments on the disclosure format established by proposed NFA Compliance Rule 2–35(d). The Commission also seeks comments on the proposed technical amendments to reduce the number of copies of disclosure documents that CPOs and CTAs must file. The text of NFA Compliance Rule 2–35(d) and its Interpretive Notice are attached to this release as Appendix A.

VII. Related Matters

A. Regulatory Flexibility Act

The Regulatory Flexibility Act (''RFA''), 5 U.S.C. 601–611 (1994), requires that agencies, in proposing rules, consider the impact of those rules on small businesses. The Commission has previously established certain definitions of ''small entities'' to be used by the Commission in evaluating the impact of its rules on such entities in accordance with the RFA.[13] The Commission previously has determined that registered CPOs are not small entities for the purpose of the RFA.[14] With respect to CTAs, the Commission has stated that it would evaluate within the context of a particular rule proposal whether all or some affected CTAs would be considered to be small entities and, if so, the economic impact on them of any rule.[15] The portion of the rule proposal herein that affects CTAs makes no change in existing requirements other than to reduce the number of copies of the disclosure document that CTAs seeking to direct or guide client accounts must file pursuant to Rule 4.31(a). Therefore, the Chairman, on behalf of the Commission, hereby certifies, pursuant to 5 U.S.C. 605(b), that the action taken herein will not have a significant economic impact on a substantial number of small entities.

B. Paperwork Reduction Act

The Paperwork Reduction Act of 1995 (''PRA''),[16] which imposes certain requirements on federal agencies (including the Commission) in connection with their conducting or sponsoring any collection of information as defined by the PRA, does not apply to this rule. The Commission believes the proposed rule revisions do not contain information collection requirements which require the approval of the Office of Management and Budget. The purpose of this rule is to permit the use of a summary profile document for commodity pools, and other technical changes related to filing of disclosure documents.

List of Subjects in 17 CFR Part 4

Brokers, commodity futures, commodity pool operators and commodity trading advisors.

In consideration of the foregoing and pursuant to the authority contained in the Commodity Exchange Act and in particular sections 2(a)(1), 4l, 4m, 4n, 4o, and 8a, 7 U.S.C. 2, 6l, 6m, 6n, 6o, and 12(a), the Commission hereby proposes to amend Chapter I of Title 17 of the Code of Federal Regulations as follows:

[12] Although NFA's initial submission of Rule 2–35 included provisions for use of profile documents by CTAs, these provisions were eliminated from their recent submission because CTA documents are ''not nearly as voluminous as CPO documents. * * *'' Letter from Daniel J. Roth, Executive Vice President and General Counsel, NFA, to Jean A. Webb, Secretary of the Commission, dated March 7, 2000.

[13] 47 FR 18618–18621 (April 30, 1982).

[14] 47 FR 18619–18620.

[15] 47 FR 18618–18620.

[16] 44 U.S.C. 3507(d).

PART 4—COMMODITY POOL OPERATORS AND COMMODITY TRADING ADVISORS

1. The authority citation for part 4 continues to read as follows:

Authority: 7 U.S.C. 1a, 2, 4, 6b, 6c, 6l, 6m, 6n, 6o, 12a and 23.

2. Section 4.2 is proposed to be amended by revising paragraph (a) to read as follows:

§ 4.2 Requirements as to filing.

(a) All material filed with the Commission under this part 4 must be filed with the Commission at its Washington, DC office (Att: Managed Funds Branch, Division of Trading and Markets, CFTC, Three Lafayette Centre, 1155 21st Street, NW., Washington, DC, 20581; Provided, however, that Disclosure Documents, profile documents, and amendments thereto may be filed at the following electronic mail address: *ddoc-efile@cftc.gov*.

* * * * *

3. Section 4.21 is proposed to be amended by revising paragraph (a) to read as follows:

§ 4.21 Required delivery of pool Disclosure Document.

(a)(1) No commodity pool operator registered or required to be registered under the Act may, directly or indirectly, solicit, accept or receive funds, securities or other property from a prospective participant in a pool that it operates or intends to operate unless, on or before the date it engages in that activity, the commodity pool operator delivers or causes to be delivered to the prospective participant a Disclosure Document for the pool containing the information set forth in § 4.24.

(2) Notwithstanding the requirements regarding solicitation specified in paragraph (a)(1) of this section, a commodity pool operator may provide to a prospective participant either of the following documents prior to delivery of a Disclosure Document, subject to compliance with rules promulgated by a registered futures association pursuant to section 17(j) of the Act:

(i) A profile document;

(ii) Where the prospective participant is an accredited investor, as defined in 17 CFR 230.501(a), a notice of intended offering and statement of the terms of the intended offering.

* * * * *

3. Section 4.26 is proposed to be amended by revising paragraphs (a), (b) and (d) to read as follows:

§ 4.26 Use, amendment and filing of Disclosure Document.

(a) (1) Subject to paragraph (c) of this section, all information contained in the Disclosure Document and, where used, profile document, must be current as of the date of the Document; *Provided, however,* that performance information may be current as of a date not more than three months prior to the date of the Document.

(2) No commodity pool operator may use a Disclosure Document or profile document dated more than nine months prior to the date of its use.

(b)(1) If the commodity pool operator knows or should know that the Disclosure Document or profile document is materially inaccurate or incomplete in any respect, it must correct that defect and must distribute the correction to:

(i) All existing pool participants within 21 calendar days of the date upon which the pool operator first knows or has reason to know of the defect; and

(ii) Each previously solicited prospective pool participant prior to accepting or receiving funds, securities or other property from any such prospective participant.

(2) The pool operator may furnish the correction by any of the following means:

(i) An amended Disclosure Document or profile document;

(ii) With respect to a hard copy of the Disclosure Document, a sticker affixed to the Disclosure Document; or

(iii) Other similar means.

(3) The pool operator may not use the Disclosure Document or profile document until such correction has been made.

* * * * *

(d) Except as provided by § 4.8:

(1) The commodity pool operator must file with the Commission one copy of the Disclosure Document and profile document for each pool that it operates or that it intends to operate not less than 21 calendar days prior to the date the pool operator first intends to deliver the Document to a prospective participant in the pool; and

(2) The commodity pool operator must file with the Commission one copy of the subsequent amendments to the Disclosure Document and profile document for each pool that it operates or that it intends to operate within 21 calendar days of the date upon which the pool operator first knows or has reason to know of the defect requiring the amendment.

4. Section 4.36 is proposed to be amended by revising paragraph (d) to read as follows:

§ 4.36 Use, amendment and filing of Disclosure Document.

* * * * *

(d)(1) The commodity trading advisor must file with the Commission one copy of the Disclosure Document for trading program that it offers or that it intends to offer not less than 21 calendar days prior to the date the trading advisor first intends to deliver the Document to a prospective client in the trading program; and

(2) The commodity trading advisor must file with the Commission one copy of the subsequent amendments to the Disclosure Document for each trading program that it offers or that it intends to offer within 21 calendar days of the date upon which the trading advisor first knows or has reason to know of the defect requiring the amendment.

Issued in Washington, D.C. on July 20, 2000 by the Commission.

Jean A. Webb,

Secretary of the Commission.

Note: The following appendix will not appear in the Code of Federal Regulations:

Appendix A: Proposed NFA Compliance Rule 2–35(d) and Related Interpretive Notice

VIII. COMPLIANCE RULES

* * *

Part 2—Rules Governing the Business Conduct of Members Registered With the Commission

* * *

RULE 2–35. CPO/CTA DISCLOSURE DOCUMENTS.

* * *

(d) CPO Profile Document.

(1) A Member CPO may deliver a profile document, as defined in paragraph (2) below, to a prospective participant prior to the delivery of a Disclosure Document, provided that the profile clearly states that an investment in the pool may not be made until after the prospective participant has received the Disclosure Document. A Member CPO shall not provide any advertising or other promotional materials with the profile unless it is also accompanied by the pool's Disclosure Document.

(2) A profile document shall not present information on more than one pool. A profile document shall include the following information, and only the following information, in the order indicated:

(i) A cover page which contains the following information:

- The following legend:

This profile summarizes key information about the pool that is included in the pool's disclosure document. The disclosure document includes additional information about the pool, including a more detailed description of the risks associated with investing in the pool, that you should consider before you invest. Before accepting

any funds or other property from you for investment in this pool, the operator of this pool is required to provide you with a copy of the pool's disclosure document and obtain a signed and dated acknowledgment from you indicating that you have received the pool's disclosure document. You may obtain the disclosure document and other information about the pool at no cost by contacting _____ at _____.

• The name, main business address, main business telephone number and form of organization of the pool;

• The name, main business address, main business telephone number and form of organization of the pool operator;

• A statement identifying the document as a ''profile'' without using the term ''disclosure document;''

• The approximate date of the profile's first use;

• A break-even analysis which includes a tabular presentation of all fees and expenses presented in a manner prescribed by NFA's Board of Directors;

(ii) The following cautionary statement:

Before investing in a commodity pool, you should carefully consider the following:

• Futures and options trading can quickly lead to large losses as well as gains.

• Trading losses can sharply reduce the net asset value of a pool and the value of your interest in the pool.

• Some pools have restrictions on redemptions that may affect your ability to withdraw your investment in the pool.

• Some pools are subject to substantial charges for management, advisory and brokerage fees. In order to cover these fees, the pool may have to experience substantial trading profits.

This profile document does not provide all the information you need to evaluate your participation in this pool. You should carefully review the pool's disclosure document which contains detailed information on the pool's principal risk factors, the expenses that will be charged to the pool and a more detailed description of the break-even analysis for this pool.

You should also be aware that neither the Commodity Futures Trading Commission nor the National Futures Association has passed upon the merits of participating in this pool nor the adequacy or accuracy of this profile.

(iii) The identity of each principal of the pool operator, the pool's trading manager and its principals, if any, each major investee pool, the operator of the pool and its principals, and each major CTA and its principals (for natural persons, this should include name and title);

(iv) A non-marketing orientated discussion of the trading strategy used to trade the pool;

(v) A discussion of any additional risk factors not highlighted in the cautionary statement which are material to this particular pool;

(vi) A discussion of any conflicts of interest which are material to the particular pool;

(vii) A summary of any material administrative or criminal actions, whether pending or concluded, within five years of the date of the profile, against the commodity pool operator or any of its principals;

(viii) A brief description of any restrictions on transfers of a participant's interest in the pool;

(ix) A brief description of how a participant may redeem his interest in the pool and a statement of redemption charge, if any;

(x) If applicable, a statement indicating the extent to which a participant may be held liable for obligations of the pool in excess of the funds contributed by the participant for the purchase of an interest in the pool;

(xi) For pools with prior operating history, the capsule performance information for the offered pool as required by Commodity Futures Trading Commission Regulation 4.25(a)(1)(i), exclusive of the requirement of Regulation 4.25(a)(2). In addition, if applicable, notice to the prospective participant that the pool operator is required to report performance information on other pools operated by the pool operator in its Disclosure Document under CFTC Regulation 4.25 and the specific section in the Disclosure Document where this information may be found; and

(xii) For pools with no operating history, a statement that the pool has no operating history and, if applicable, notice to the prospective participant that the pool operator is required to report performance information on other pools operated by the pool operator and performance information on major CTAs trading the pool in its Disclosure Document under CFTC Regulation 4.25 and the specific section in the Disclosure Document where this information may be found.

(3) The profile document is subject to the filing requirements of CFTC Regulation 4.26. A particular pool's profile document must be filed with the disclosure document required under CFTC Regulation 4.21(a).

* * *

CPO Profile Documents: Compliance Rule 2–35 Interpretive Notice

NFA Compliance Rule 2–35 permits Member CPOs to conduct initial customer solicitations with a profile document, provided that a customer is given the disclosure document prior to investing in the pool. The profile document should provide a summary of key information regarding an investment in the commodity pool being offered. Among other things, the profile requires a discussion of the risk factors material to the particular pool being offered and a discussion of any conflicts of interest material to the offered pool. The information provided under both these sections should be tailored to the pool being offered and should not include a generic discussion of risks or conflicts of interest typical of all commodity pools.

The discussion of risk factors should focus on characteristics of the pool that go beyond risks that are associated with commodity pool investments in general. This section should not contain boilerplate or generic language on the risks related to volatility and leverage which are associated with all commodity pool investments. If, however, these risk factors raise any special considerations with respect to the offered pool, the profile should contain a complete discussion of these special considerations. Other risk factors that should be discussed in this section include but are not limited to risks associated with allocating a substantial portion of a pool's assets to one CTA or a group of CTAs whose trading methods do not provide any diversification (*e.g.,* a single CTA fund which invested exclusively in agricultural products); counterparty creditworthiness issues that may arise if the pool's assets are concentrated in OTC or foreign instruments; liquidity issues that may arise if the pool itself is invested in illiquid products; and leverage issues that may exist if the pool will engage in borrowing or if assets are allocated among the pool's CTAs in such a way that the total allocations to the pool's CTAs are greater than the total assets of the pool.

The discussion on conflicts of interest should focus on arrangements or relationships among the pool's CPO, trading manager, major CTAs, CPOs of major investee pools, and any other person providing services to the pool that may compromise the pool participants' interest with respect to trading costs, fees, execution, or any other aspects of the pool's operation. For example, if the CPO provides other services to the pool for compensation, the CPO has a financial disincentive to replace itself even if it would be in the best interest of the pool. In addition, the compensation the CPO receives for providing these services will not have been set by arm's length negotiation. Other conflicts of interest that should be disclosed include, but are not limited to, situations where the CPO or CTA receives per trade compensation or where the CPO participates in soft dollar arrangements with the pool's FCM.

This interpretive notice is not intended to provide an inclusive list of the risk factors and conflicts of interest that must be disclosed in the profile.

[FR Doc. 00–18909 Filed 7–26–00; 8:45 am]

BILLING CODE 6351–01–P

DEPARTMENT OF THE INTERIOR

Minerals Management Service

30 CFR Part 250

RIN 1010–AC43

Oil and Gas and Sulphur Operations in the Outer Continental Shelf—Oil and Gas Drilling Operations

AGENCY: Minerals Management Service (MMS), Interior.

ACTION: Extension of comment period for proposed rule.

SUMMARY: This document extends to October 19, 2000, the deadline for submitting comments on the proposed rule which restructures the requirements for oil and gas drilling operations on the Outer Continental Shelf (OCS), adds some new requirements, and converts the rule into plain language.

DATES: We will consider all comments received by October 19, 2000, and we may not fully consider comments received after October 19, 2000.

ADDRESSES: Mail or hand-carry written comments (three copies) to the Department of the Interior; Minerals Management Service; 381 Elden Street; Mail Stop 4024; Herndon, Virginia 20170–4817; Attention: Rules Processing Team. The RPT's e-mail address is: *rules.comment@MMS.gov.*

FOR FURTHER INFORMATION CONTACT: Bill Hauser, Engineering and Operations Division, at (703) 787–1600.

SUPPLEMENTARY INFORMATION: MMS was asked to extend the deadline for submitting comments on the proposed regulations revising 30 CFR part 250, Subpart D, Oil and Gas Drilling Operations, published on June 21, 2000 (65 FR 38453). The request explains that the proposed rule has a number of important changes that require careful consideration for comprehensive comments. Also, because the proposed rule was rewritten in the ''plain language'' style and completely restructures and reorders the current regulations in 30 CFR Part 250, subpart D, additional time was requested to sort out the proposed rule for comparison.

Public Comments Procedures

Our practice is to make comments, including names and home addresses of respondents, available for public review during regular business hours. Individual respondents may request that we withhold their home address from the rulemaking record, which we will honor to the extent allowable by law. There may be circumstances in which we would withhold from the rulemaking record a respondent's identity, as allowable by the law. If you wish us to withhold your name and/or address, you must state this prominently at the beginning of your comment. However, we will not consider anonymous comments. We will make all submissions from organizations or businesses, and from individuals identifying themselves as representatives or officials of organizations or businesses, available for public inspection in their entirety.

Dated: July 20, 2000.

E.P. Danenberger,

Chief, Engineering and Operations Division.

[FR Doc. 00–19025 Filed 7–26–00; 8:45 am]

BILLING CODE 4310–MR–P

DEPARTMENT OF EDUCATION

34 CFR Part 674

RIN 1845–AA15

Federal Perkins Loan Program

AGENCY: Office of Postsecondary Education, Education.

ACTION: Notice of proposed rulemaking.

SUMMARY: The Secretary proposes to amend the Federal Perkins Loan (Perkins Loan) Program regulations. These proposed regulations are intended to improve collections in the Perkins Loan program by providing greater flexibility in the process of assigning defaulted Perkins loans to the Secretary for collection. They allow State institutions participating in the Perkins program to invoke their right to sovereign immunity in bankruptcy proceedings. In addition, these proposed regulations clarify the maximum collection costs that may be assessed a borrower who defaults on a rehabilitated defaulted loan.

DATES: We must receive your comments by September 11, 2000.

ADDRESSES: Address all comments concerning these proposed regulations to Ms. Vanessa Freeman, U.S. Department of Education, P.O. Box 23272, Washington, DC 20026–3272. If you prefer to send your comments through the Internet, use the following address: perkinsnprm@ed.gov.

If you want to comment on the information collection requirements you must send your comments to the Office of Management and Budget at the address listed in the Paperwork Reduction Act section of this preamble. You may also send a copy of these comments to the Department representative named in this section.

FOR FURTHER INFORMATION CONTACT: Ms. Vanessa Freeman, Program Analyst, U.S. Department of Education, 400 Maryland Avenue, SW., Room 3045, Regional Office Building #3, Washington, DC 20202–5346. Telephone: (202) 708–8242. If you use a telecommunications device for the deaf (TDD), you may call the Federal Information Relay Service (FIRS) at 1–800–877–8339.

Individuals with disabilities may obtain this document in an alternate format (*e.g.,* Braille, large print, audiotape, or computer diskette) on request to the contact person listed in the preceding paragraph.

SUPPLEMENTARY INFORMATION:

Invitation To Comment

We invite you to submit comments regarding these proposed regulations. To ensure that your comments have maximum effect in developing the final regulations, we urge you to identify clearly the specific section or sections of the proposed regulations that each of your comments addresses and to arrange your comments in the same order as the proposed regulations.

We invite you to assist us in complying with the specific requirements of Executive Order 12866 and its overall requirement of reducing regulatory burden that might result from these proposed regulations. Please let us know of any further opportunities we should take to reduce potential costs or increase potential benefits while preserving the effective and efficient administration of the program.

During and after the comment period, you may inspect all public comments about these proposed regulations at the following address: U.S. Department of Education, 7th and D Sts. SW., ROB #3, Rm 3045, Washington, DC 20026–3272, between the hours of 8:30 a.m. and 4 p.m., Eastern time, Monday through Friday, of each week except Federal holidays.

Assistance to Individuals With Disabilities in Reviewing the Rulemaking Record

On request, we will supply an appropriate aid, such as a reader or print magnifier, to an individual with a disability who needs assistance to review the comments or other documents in the public rulemaking docket for these proposed regulations. If you want to schedule an appointment for this type of aid, you may call (202) 205–8113 or (202) 260–9895. If you use a TDD, you may call the Federal Information Relay Service at 1–800–877–8339.

Negotiated Rulemaking

Section 492 of the HEA requires that, before publishing any proposed regulations for programs under Title IV of the HEA, the Secretary obtain public involvement in the development of the proposed regulations. After obtaining advice and recommendations, the Secretary must conduct a negotiated rulemaking process to develop the proposed regulations. All published proposed regulations must conform to agreements resulting from the negotiated rulemaking process unless the Secretary reopens the negotiated rulemaking process or provides a written explanation to the participants in that process why the Secretary has decided to depart from the agreements.

To obtain public involvement in the development of the proposed regulations, we held listening sessions

in Washington, DC, Atlanta, Chicago, and San Francisco. Four half-day sessions were held on September 13 and 14, 1999, in Washington, DC. In addition, we held three regional sessions in Atlanta on September 17, in Chicago on September 24, and in San Francisco on September 27, 1999. The Office of Student Financial Assistance's Customer Service Task Force also conducted listening sessions to obtain public involvement in the development of our regulations.

We then published a notice in the **Federal Register** (64 FR 73458, December 30, 1999) to announce our intention to establish two negotiated rulemaking committees to draft proposed regulations affecting Title IV of the HEA. The notice requested nominations for participants from anyone who believed that his or her organization or group should participate in this negotiated rulemaking process. The notice announced that we would select participants for the process from the nominees of those organizations or groups. The notice also announced a tentative list of issues that each committee would negotiate.

Once the two committees were established, they met to develop proposed regulations over the course of several months, beginning in February. The proposed regulations contained in this NPRM reflect the final consensus of Negotiating Committee I (committee), which was made up of the following members:

American Association of Collegiate Registrars and Admissions Officers
American Association of Cosmetology Schools
American Association of State Colleges and Universities (in coalition with American Association of Community Colleges)
American Council on Education
Career College Association
Coalition of Higher Education Assistance Organizations
Consumer Bankers Association
Education Finance Council
Education Loan Management Resources
Legal Services
National Association of College and University Business Officers
National Association of Independent Colleges and Universities
National Association of State Universities and Land-Grant Colleges
National Association of Student Financial Aid Administrators
National Association of Student Loan Administrators
National Council of Higher Education Loan Programs
National Direct Student Loan Coalition
Sallie Mae, Inc.
Student Loan Servicing Alliance
The College Fund/United Negro College Fund
United States Department of Education
United States Student Association
US Public Interest Research Group

As stated in the committee protocols, consensus means that there must be no dissent by any member in order for the committee to be considered to have reached agreement. Consensus was reached on all of the proposed regulations in this document.

Significant Proposed Regulations

We discuss substantive issues under the sections of the proposed regulations to which they pertain. Generally, we do not address proposed regulatory provisions that are technical or otherwise minor in effect.

Sections 674.13 Reimbursement to the Fund and 674.50 Assignment of defaulted loans to the United States

Current regulations: Section 674.13 of the current regulations requires an institution to reimburse its Federal Perkins Loan Fund (Institution's Fund) for the amount of defaulted loans, including administrative cost allowances previously claimed, for which the institution failed to retain required documentation (*e.g.*, the promissory note and a record of advances) or failed to undertake due diligence in collections. Section 674.50(c) of the current regulations identifies the documentation required to be submitted by an institution to assign a loan to the Secretary. Our rejection of an assignment submission for incorrect or incomplete documentation or for an evidenced lack of due diligence in collection of the loan may result in a request that the institution reimburse its Institution's Fund.

Proposed regulations: We propose to amend these sections of the regulations to encourage institutions to assign defaulted loans to us by providing the Secretary discretion to accept defaulted loans for assignment even if not all the documentation specified in 674.50(c) is available or reveals imperfect collection. We also propose to provide the Secretary with discretion to determine the circumstances under which we will require reimbursement by the institution to its Institution's Fund.

Reasons: The proposed change to these sections of the current regulations from absolute requirements to Secretarial discretion represents a compromise with the non-federal negotiators regarding assignment of certain defaulted loans by institutions.

Our initial proposal to require loan assignment reflected our concern over the approximately $350 million in defaulted Perkins loans that are held by participating institutions and have been in default for five or more years as reported by schools on their annual Fiscal Operations Report. Our proposal would have required schools whose Perkins Loan portfolio included a significant percentage of loans in default for five or more years to assign to the Secretary those aged loans with no recent payment activity.

We believe that, without additional significant efforts, this national portfolio of aging defaulted loans will continue to grow and may become less collectible over time. Left unaddressed, this situation reduces funds available for future students and may undermine public support for the Federal Perkins Loan Program. Institutions may have exhausted available collection efforts and ceased collection on an unknown number of these accounts. Because we have collection tools, such as administrative wage garnishment, federal offset, and litigation by the Department of Justice in federal court, that are not available to institutions, we want to have these aged accounts assigned to the Secretary for collection.

The non-federal negotiators representing institutions' interests strenuously rejected the contention that all loans in default for five or more years were inactive accounts and that collection efforts were not continuing on those accounts. Although they agreed that we have collection tools that are not available to institutions, they expressed the belief that we should make these tools more accessible by simplifying the existing voluntary assignment process or introducing a referral process into the regulations rather than imposing mandatory assignment. They indicated that the current voluntary assignment process was underused because it was administratively burdensome and put institutions at risk of reimbursing their Institution's Fund for all loans not accepted for assignment. During the negotiations, there was much discussion and review of a proposal submitted by the non-federal negotiators for use of a referral and voluntary assignment process.

After carefully considering the proposal for a voluntary referral process we declined to consider such an approach. Our experience with similar Perkins Loan referral plans in the past convinced us that such plans are administratively unworkable. They are difficult to manage, hard to explain to borrowers, and present fiscal and legal obstacles with regard to the return of payments received to the referring institution.

Instead we proposed changes to the current voluntary assignment regulations that would allow us to have

the opportunity to work with interested institutions and organizations to develop a less burdensome and more flexible process before turning to a mandatory assignment approach. Thus, these proposed regulations give the Secretary discretion in the two areas (required reimbursement and documentation requirements) that were problematic to some negotiators.

We intend to develop, with the cooperation of participating Perkins institutions, a simplified voluntary assignment process for aging defaulted accounts. We will also monitor the use of this new process over the reporting cycle following implementation of the regulations. We expect institutions to actively review their portfolios and use the new process to assign aged, nonpaying accounts to us and we anticipate a significant reduction in the number and dollar value of these accounts as a result. Should the streamlined voluntary assignment process prove unsuccessful in reducing the number of these accounts, we will consider alternatives, including reintroducing our original regulatory proposal for mandatory assignment.

Section 674.39 Loan Rehabilitation

Current Regulations: Section 674.39(c) of the current regulations specifies that if collection costs are assessed on a rehabilitated defaulted Perkins loan, those collections costs may not exceed 24 percent of the unpaid principal and accrued interest on the loan as of the date following application of the twelfth payment required to rehabilitate the loan.

Proposed Regulations: We propose to amend this section of the regulations by adding a provision that clarifies that the 24 percent cap on collection costs that may be charged on a rehabilitated loan does not apply if the borrower defaults again on the rehabilitated loan.

Reasons: The cap of 24 percent on collection costs for borrowers who successfully rehabilitate a defaulted Perkins loan is a benefit to those borrowers, who in many cases were subject to a higher percentage of collection costs prior to the rehabilitation. That benefit should no longer apply on the loan, however, should the borrower once again default on its repayment.

Section 674.49 Bankruptcy of Borrower

Current Regulations: Section 674.49(b) of the regulations currently requires institutions to file a proof of claim in a bankruptcy proceeding under Chapter 7 of the Bankruptcy Code unless the borrower has no assets.

Proposed Regulations: We propose to amend this provision of the regulations to allow an institution that is determined to be an agency of a State to invoke in bankruptcy proceedings its right of sovereign immunity under the 11th amendment to the Constitution of the United States.

Reasons: We are amending the regulations to codify the recognized right of States and their agents to invoke their rights under the 11th amendment to the Constitution and eliminate any conflict in existing regulations that would suggest that a proof of claim must be filed in all cases where this right might otherwise be invoked.

Executive Order 12866

1. Potential Costs and Benefits

Under Executive Order 12866, we have assessed the potential costs and benefits of this regulatory action.

The potential costs associated with the proposed regulations are those resulting from statutory requirements and those we have determined as necessary for administering this program effectively and efficiently.

The proposed regulations would expand borrower benefits by fixing collection costs on rehabilitated loans not in default at 24 percent. The proposed regulations provide additional flexibility in the administration of the Perkins Loan Program by relaxing both the documentation requirements for defaulted loans assigned to the Secretary, and provisions regarding the institutional reimbursement to their Fund for the costs of defaulted loans. The proposed regulations also modify current regulations regarding the determination of bankruptcy to make Federal requirements consistent with the States' constitutional rights under the 11th Amendment. In assessing the potential costs and benefits—both quantitative and qualitative—of this regulatory action, we have determined that the benefits would justify the costs.

2. Clarity of the Regulations

Executive Order 12866 and the President's Memorandum of June 1, 1998 on ''Plain Language in Government Writing'' require each agency to write regulations that are easy to understand.

The Secretary invites comments on how to make these proposed regulations easier to understand, including answers to questions such as the following:

- Are the requirements in the proposed regulations clearly stated?
- Do the proposed regulations contain technical terms or other wording that interferes with their clarity?
- Does the format of the proposed regulations (grouping and order of sections, use of headings, paragraphing etc.) aid or reduce their clarity?
- Would the proposed regulations be easier to understand if we divided them into more (but shorter) sections? (A ''section'' is preceded by the symbol ''§ '' and a numbered heading; for example, § 674.39 Loan Rehabilitation.)
- Could the description of the proposed regulations in the ''Supplementary Information'' section of this preamble be more helpful in making the proposed regulations easier to understand? If so, how?
- What else could we do to make the proposed regulations easier to understand?

Send any comments that concern how the Department could make these proposed regulations easier to understand to the person listed in the **ADDRESSES** section of the preamble.

Regulatory Flexibility Act Certification

The Secretary certifies that these proposed regulations would not have a significant economic impact on a substantial number of small entities. These proposed regulations would affect institutions of higher education that participate in title IV, HEA programs. The U.S. Small Business Administration (SBA) Size Standards define institutions as ''small entities'' if they are for-profit or nonprofit institutions with total annual revenue below $5,000,000 or if they are institutions controlled by governmental entities with populations below 50,000.

The parties affected by these proposed regulations are institutions of higher education that participate in the Perkins Loan Program, and individual Perkins Loan borrowers. Perkins Loan borrowers are not considered small entities under the Regulatory and Flexibility Act. A small percentage of the approximately 2,000 institutions participating in the Perkins Loan program would meet the SBA definition of ''small entities.''

These proposed regulations would expand borrower benefits and provide additional flexibility in the administration of the Perkins Loan program to both large and small institutions without requiring significant changes to institutional systems or operations. These proposed regulations would not impose a significant economic impact on a substantial number of small entities.

Paperwork Reduction Act of 1995

Sections 674.13, 674.39, 674.49, and 674.50 of these regulations contain information collection requirements. Under the Paperwork Reduction Act of 1995 (44 U.S.C. 3507(d)), the Department of Education has submitted

a copy of these sections to the Office of Management and Budget (OMB) for its review.

Collection of Information: Federal Perkins Loan Program

Section 674.13 Reimbursement to the Fund. The Department currently has these regulations approved under OMB control number 1845–0019. This provision allows institutions more flexibility in what the Department requires when reimbursing their funds for defaulted student loans and does not increase the burden hours for schools.

Section 674.39 Loan Rehabilitation. We are adding a provision to include collection costs that may be charged in excess of 24 percent to a rehabilitated loan in the event the rehabilitated loan defaults. There are no burden hours associated with this proposed regulation.

Section 674.50 Assignment of defaulted loans to the United States. This proposed regulation relaxes some of the documentation requirements for institutions that assign defaulted student loans to the Department of Education for collection. This proposed regulation does not increase the burden hours for schools.

Section 674.49 Bankruptcy of borrower. The Department currently has this section approved under OMB control number 1845–0023. This regulation allows state institutions that participate in the Federal Perkins Loans Program the authority to invoke sovereign immunity in Bankruptcy proceedings under Chapter 7 or 13 of the Bankruptcy Code. This proposed regulation resolves any ambiguity surrounding an institution's authority to invoke its rights under the 11th Amendment. This proposed regulation does not change information collection contained in this section.

If you want to comment on the information collection requirements, please send your comments to the Office of Information and Regulatory Affairs, OMB, room 10235, New Executive Office Building, Washington, DC 20503; Attention: Desk Officer for U.S. Department of Education. You may also send a copy of these comments to the Department representative named in the **ADDRESSES** section of this preamble.

We consider your comments on these proposed collections of information in—

- Deciding whether the proposed collections are necessary for the proper performance of our functions, including whether the information will have practical use;
- Evaluating the accuracy of our estimate of the burden of the proposed collections, including the validity of our methodology and assumptions;
- Enhancing the quality, usefulness, and clarity of the information we collect; and
- Minimizing the burden on those who must respond. This includes exploring the use of appropriate automated, electronic, mechanical, or other technological collection techniques or other forms of information technology; *e.g.*, permitting electronic submission of responses.

OMB is required to make a decision concerning the collections of information contained in these proposed regulations between 30 and 60 days after publication of this document in the **Federal Register**. Therefore, to ensure that OMB gives your comments full consideration, it is important that OMB receives the comments within 30 days of publication. This does not affect the deadline for your comments to us on the proposed regulations.

Intergovernmental Review

This program is not subject to Executive Order 12372 and the regulations in 34 CFR part 79.

Assessment of Educational Impact

The Secretary particularly requests comments on whether these proposed regulations would require transmission of information that any other agency or authority of the United States gathers or makes available.

Federalism

Executive Order 13132 requires us to ensure meaningful and timely input by State and local elected officials in the development of regulatory policies that have federalism implications. ''Federalism implications'' means substantial direct effects on the States, on the relationship between the national government and the States, or on the distribution of power and responsibilities among various levels of government. The proposed regulations in Section 674.49 may have federalism implications, as defined in Executive Order 13132. We encourage State and local elected officials to review and provide comments on these proposed regulations.

Electronic Access to This Document

You may view this document in text or Adobe Portable Document Format (PDF) on the Internet at the following sites:

http://ocfo.ed.gov/fedreg.htm
http://ifap.ed.gov/csb_html/fedlreg.htm

To use the PDF you must have the Adobe Acrobat Reader Program with Search, which is available free at the previous sites. If you have questions about using the PDF, call the U.S. Government Printing Office (GPO), toll free, at 1–888–293–6498; or in the Washington, D.C., area at (202) 512–1530.

Note: The official version of this document is the document published in the **Federal Register**. Free Internet access to the official edition of the **Federal Register** and the Code of Federal Regulations is available on GPO Access at: http://www.access.gpo.gov/nara/index.html.

(Catalog of Federal Domestic Assistance Number: 84.037 Federal Perkins Loan Program)

List of Subjects in 34 CFR Part 674

Loan programs—education, Student aid, Reporting and recordkeeping requirements.

Dated: July 19, 2000.

Richard W. Riley,

Secretary of Education.

For the reasons discussed in the preamble, the Secretary proposes to amend part 674 of title 34 of the Code of Federal Regulations as follows:

PART 674—FEDERAL PERKINS LOAN PROGRAM

1. The authority citation for part 674 continues to read as follows:

Authority: 20 U.S.C. 1087aa–1087ii and 20 U.S.C. 421–429, unless otherwise noted.

2. Section 674.13 is amended by revising paragraph (a) introductory text to read as follows:

§ 674.13 Reimbursement to the Fund.

(a) The Secretary may require an institution to reimburse its Fund in an amount equal to that portion of the outstanding balance of—

* * * * *

3. Section 674.39 is amended by revising paragraph (c) to read as follows:

§ 674.39 Loan rehabilitation.

* * * * *

(c) Collection costs on a rehabilitated loan—

(1) If charged to the borrower, may not exceed 24 percent of the unpaid principal and accrued interest as of the date following application of the twelfth payment;

(2) That exceed the amounts specified in paragraph (c)(1) of this section, may be charged to an institution's Fund until July 1, 2002 in accordance with § 674.47(e)(5); and

(3) Are not restricted to 24 percent in the event the rehabilitated loan defaults.

* * * * *

4. Section 674.49 is amended by revising paragraph (b) to read as follows:

§ 674.49 Bankruptcy of borrower.

* * * * *

(b) *Proof of claim.* The institution must file a proof of claim in the bankruptcy proceeding unless—

(1) In the case of a proceeding under chapter 7 of the Bankruptcy Code, the notice of meeting of creditors states that the borrower has no assets, or

(2) In the case of a bankruptcy proceeding under either Chapter 7 or Chapter 13 of the Bankruptcy Code in which the repayment plan proposes that the borrower repay less than the full amount owed on the loan, the institution has an authoritative determination by an appropriate State official that in the opinion of the state official, the institution is an agency of the State and is, on that basis, under applicable State law, immune from suit.

* * * * *

5. Section 674.50 is amended by revising paragraph (c) introductory text to read as follows:

§ 674.50 Assignment of defaulted loans to the United States.

* * * * *

(c) The Secretary may require an institution to submit the following documents for any loan it proposes to assign—

* * * * *

[FR Doc. 00–18952 Filed 7–26–00; 8:45 am]

BILLING CODE 4000–01–P

ENVIRONMENTAL PROTECTION AGENCY

40 CFR Part 52

[CA 019–FOI; FRL–6841–9]

Clean Air Act Reclassification and Finding of Failure To Implement a State Implementation Plan; California, San Joaquin Valley Nonattainment Area; Ozone; Extension of Comment Period

AGENCY: Environmental Protection Agency (EPA).

ACTION: Proposed rule; extension of comment period.

SUMMARY: EPA is extending the comment period for its proposed action to find that the San Joaquin Valley serious ozone nonattainment area, which includes eastern Kern County, did not attain the 1-hour ozone national ambient air quality standard by November 15, 1999, the Clean Air Act's (CAA) attainment deadline for serious ozone nonattainment areas. If EPA makes final this proposed finding, the San Joaquin Valley nonattainment area will be reclassified by operation of law to severe.

DATES: Comments must arrive by August 28, 2000.

ADDRESSES: Mail comments to John Ungvarsky, Air Planning Office (Air-2), U.S. Environmental Protection Agency, Region IX, 75 Hawthorne Street, San Francisco, CA 94105–3901 or email comments to ungvarsky.john@epa.gov.

FOR FURTHER INFORMATION CONTACT: John Ungvarsky, Air Planning Office (Air-2), U.S. Environmental Protection Agency, Region IX, (415) 744–1286.

SUPPLEMENTARY INFORMATION: On June 19, 2000, we proposed that the San Joaquin Valley serious ozone nonattainment area did not attain the 1-hour ozone national ambient air quality standard and that the approved serious area ozone State Implementation Plan for the San Joaquin Valley nonattainment area has not been fully implemented.

The proposal provided a 30 day public comment period that ended on July 19, 2000. In response to a request from the San Joaquin Valley Unified Air Pollution Control District and the Kern County Air Pollution Control District, we are extending the comment period for an additional 30 days.

Dated: July 19, 2000.

Laura Yoshii,

Acting Regional Administrator, Region IX.

[FR Doc. 00–19013 Filed 7–26–00; 8:45 am]

BILLING CODE 6560–50–P

ENVIRONMENTAL PROTECTION AGENCY

40 CFR Part 300

[FRL–6841–2]

National Priorities List for Uncontrolled Hazardous Waste Sites, Proposed Rule No. 33

AGENCY: Environmental Protection Agency.

ACTION: Proposed rule.

SUMMARY: The Comprehensive Environmental Response, Compensation, and Liability Act (''CERCLA'' or ''the Act''), requires that the National Oil and Hazardous Substances Pollution Contingency Plan (''NCP'') include a list of national priorities among the known releases or threatened releases of hazardous substances, pollutants, or contaminants throughout the United States. The National Priorities List (''NPL'') constitutes this list. The NPL is intended primarily to guide the Environmental Protection Agency (''EPA'' or ''the Agency'') in determining which sites warrant further investigation to assess the nature and extent of public health and environmental risks associated with the site and to determine what CERCLA-financed remedial action(s), if any, may be appropriate. This proposed rule proposes to add 7 new sites to the NPL. All of the sites are being proposed to the General Superfund Section of the NPL.

DATES: Comments regarding any of these proposed listings must be submitted (postmarked) on or before September 25, 2000.

ADDRESSES: By Postal Mail: Mail original and three copies of comments (no facsimiles or tapes) to Docket Coordinator, Headquarters; U.S. Environmental Protection Agency; CERCLA Docket Office; (Mail Code 5201G); 1200 Pennsylvania Avenue NW; Washington, DC 20460.

By Express Mail or Courier: Send original and three copies of comments (no facsimiles or tapes) to Docket Coordinator, Headquarters; U.S. Environmental Protection Agency; CERCLA Docket Office; 1235 Jefferson Davis Highway; Crystal Gateway #1, First Floor; Arlington, VA 22202.

By E-Mail: Comments in ASCII format only may be mailed directly to superfund.docket@epa.gov. E-mailed comments must be followed up by an original and three copies sent by mail or express mail.

For additional Docket addresses and further details on their contents, see section II, ''Public Review/Public Comment,'' of the Supplementary Information portion of this preamble.

FOR FURTHER INFORMATION CONTACT: Yolanda Singer, phone (703) 603–8835, State, Tribal and Site Identification Center, Office of Emergency and Remedial Response (Mail Code 5204G); U.S. Environmental Protection Agency; 1200 Pennsylvania Avenue NW; Washington, DC 20460; or the Superfund Hotline, Phone (800) 424–9346 or (703) 412–9810 in the Washington, DC, metropolitan area.

SUPPLEMENTARY INFORMATION:

Table of Contents

I. Background
- A. What are CERCLA and SARA?
- B. What is the NCP?
- C. What is the National Priorities List (NPL)?
- D. How are Sites Listed on the NPL?
- E. What Happens to Sites on the NPL?
- F. How Are Site Boundaries Defined?
- G. How Are Sites Removed From the NPL?
- H. Can Portions of Sites Be Deleted from the NPL as They Are Cleaned Up?
- I. What is the Construction Completion List (CCL)?

II. Public Review/Public Comment
A. Can I Review the Documents Relevant to This Proposed Rule?
B. How do I Access the Documents?
C. What Documents Are Available for Public Review at the Headquarters Docket?
D. What Documents Are Available for Public Review at the Regional Dockets?
E. How Do I Submit My Comments?
F. What Happens to My Comments?
G. What Should I Consider When Preparing My Comments?
H. Can I Submit Comments After the Public Comment Period Is Over?
I. Can I View Public Comments Submitted by Others?
J. Can I Submit Comments Regarding Sites Not Currently Proposed to the NPL?
III. Contents of This Proposed Rule
A. Proposed Additions to the NPL
B. Status of NPL
IV. Executive Order 12866
A. What is Executive Order 12866?
B. Is This Proposed Rule Subject to Executive Order 12866 Review?
V. Unfunded Mandates
A. What is the Unfunded Mandates Reform Act (UMRA)?
B. Does UMRA Apply to This Proposed Rule?
VI. Effect on Small Businesses
A. What is the Regulatory Flexibility Act?
B. Has EPA Conducted a Regulatory Flexibility Analysis for This Rule?
VII. National Technology Transfer and Advancement Act
A. What is the National Technology Transfer and Advancement Act?
B. Does the National Technology Transfer and Advancement Act Apply to This Proposed Rule?
VIII. Executive Order 12898
A. What is Executive Order 12898?
B. Does Executive Order 12898 Apply to this Proposed Rule?
IX. Executive Order 13045
A. What is Executive Order 13045?
B. Does Executive Order 13045 Apply to this Proposed Rule?
X. Paperwork Reduction Act
A. What is the Paperwork Reduction Act?
B. Does the Paperwork Reduction Act Apply to this Proposed Rule?
XI. Executive Orders on Federalism
What Are The Executive Orders on Federalism and Are They Applicable to This Proposed Rule?
XII. Executive Order 13084
What is Executive Order 13084 and Is It Applicable to this Proposed Rule?

I. Background

A. What Are CERCLA and SARA?

In 1980, Congress enacted the Comprehensive Environmental Response, Compensation, and Liability Act, 42 U.S.C. 9601–9675 (''CERCLA'' or ''the Act''), in response to the dangers of uncontrolled releases of hazardous substances. CERCLA was amended on October 17, 1986, by the Superfund Amendments and Reauthorization Act (''SARA''), Pub. L. 99–499, 100 Stat. 1613 *et seq.*

B. What Is the NCP?

To implement CERCLA, EPA promulgated the revised National Oil and Hazardous Substances Pollution Contingency Plan (''NCP''), 40 CFR part 300, on July 16, 1982 (47 FR 31180), pursuant to CERCLA section 105 and Executive Order 12316 (46 FR 42237, August 20, 1981). The NCP sets guidelines and procedures for responding to releases and threatened releases of hazardous substances, pollutants, or contaminants under CERCLA. EPA has revised the NCP on several occasions. The most recent comprehensive revision was on March 8, 1990 (55 FR 8666).

As required under section 105(a)(8)(A) of CERCLA, the NCP also includes ''criteria for determining priorities among releases or threatened releases throughout the United States for the purpose of taking remedial action and, to the extent practicable, taking into account the potential urgency of such action for the purpose of taking removal action.'' ''Removal'' actions are defined broadly and include a wide range of actions taken to study, clean up, prevent or otherwise address releases and threatened releases (42 U.S.C. 9601(23)).

C. What Is the National Priorities List (NPL)?

The NPL is a list of national priorities among the known or threatened releases of hazardous substances, pollutants, or contaminants throughout the United States. The list, which is appendix B of the NCP (40 CFR part 300), was required under section 105(a)(8)(B) of CERCLA, as amended by SARA section 105(a)(8)(B) defines the NPL as a list of ''releases'' and the highest priority ''facilities'' and requires that the NPL be revised at least annually. The NPL is intended primarily to guide EPA in determining which sites warrant further investigation to assess the nature and extent of public health and environmental risks associated with a release of hazardous substances. The NPL is only of limited significance, however, as it does not assign liability to any party or to the owner of any specific property. Neither does placing a site on the NPL mean that any remedial or removal action necessarily need be taken. See Report of the Senate Committee on Environment and Public Works, Senate Rep. No. 96–848, 96th Cong., 2d Sess. 60 (1980), 48 FR 40659 (September 8, 1983).

For purposes of listing, the NPL includes two sections, one of sites that are generally evaluated and cleaned up by EPA (the ''General Superfund Section''), and one of sites that are owned or operated by other Federal agencies (the ''Federal Facilities Section''). With respect to sites in the Federal Facilities section, these sites are generally being addressed by other Federal agencies. Under Executive Order 12580 (52 FR 2923, January 29, 1987) and CERCLA section 120, each Federal agency is responsible for carrying out most response actions at facilities under its own jurisdiction, custody, or control, although EPA is responsible for preparing an HRS score and determining whether the facility is placed on the NPL. EPA generally is not the lead agency at Federal Facilities Section sites, and its role at such sites is accordingly less extensive than at other sites.

D. How Are Sites Listed on the NPL?

There are three mechanisms for placing sites on the NPL for possible remedial action (see 40 CFR 300.425(c) of the NCP): (1) A site may be included on the NPL if it scores sufficiently high on the Hazard Ranking System (''HRS''), which EPA promulgated as an appendix A of the NCP (40 CFR part 300). The HRS serves as a screening device to evaluate the relative potential of uncontrolled hazardous substances to pose a threat to human health or the environment. On December 14, 1990 (55 FR 51532), EPA promulgated revisions to the HRS partly in response to CERCLA section 105(c), added by SARA. The revised HRS evaluates four pathways: Ground water, surface water, soil exposure, and air. As a matter of Agency policy, those sites that score 28.50 or greater on the HRS are eligible for the NPL; (2) Each State may designate a single site as its top priority to be listed on the NPL, regardless of the HRS score. This mechanism, provided by the NCP at 40 CFR 300.425(c)(2) requires that, to the extent practicable, the NPL include within the 100 highest priorities, one facility designated by each State representing the greatest danger to public health, welfare, or the environment among known facilities in the State (see 42 U.S.C. 9605(a)(8)(B)); (3) The third mechanism for listing, included in the NCP at 40 CFR 300.425(c)(3), allows certain sites to be listed regardless of their HRS score, if all of the following conditions are met:

- The Agency for Toxic Substances and Disease Registry (ATSDR) of the U.S. Public Health Service has issued a health advisory that recommends dissociation of individuals from the release.
- EPA determines that the release poses a significant threat to public health.
- EPA anticipates that it will be more cost-effective to use its remedial authority than to

use its removal authority to respond to the release.

EPA promulgated an original NPL of 406 sites on September 8, 1983 (48 FR 40658). The NPL has been expanded since then, most recently on May 11, 2000 (65 FR 30482).

E. What Happens to Sites on the NPL?

A site may undergo remedial action financed by the Trust Fund established under CERCLA (commonly referred to as the ''Superfund'') only after it is placed on the NPL, as provided in the NCP at 40 CFR 300.425(b)(1). (''Remedial actions'' are those ''consistent with permanent remedy, taken instead of or in addition to removal actions. * * *'' 42 U.S.C. 9601(24).) However, under 40 CFR 300.425(b)(2) placing a site on the NPL ''does not imply that monies will be expended.'' EPA may pursue other appropriate authorities to remedy the releases, including enforcement action under CERCLA and other laws.

F. How Are Site Boundaries Defined?

The NPL does not describe releases in precise geographical terms; it would be neither feasible nor consistent with the limited purpose of the NPL (to identify releases that are priorities for further evaluation), for it to do so.

Although a CERCLA ''facility'' is broadly defined to include any area where a hazardous substance release has ''come to be located'' (CERCLA section 101(9)), the listing process itself is not intended to define or reflect the boundaries of such facilities or releases. Of course, HRS data (if the HRS is used to list a site) upon which the NPL placement was based will, to some extent, describe the release(s) at issue. That is, the NPL site would include all releases evaluated as part of that HRS analysis.

When a site is listed, the approach generally used to describe the relevant release(s) is to delineate a geographical area (usually the area within an installation or plant boundaries) and identify the site by reference to that area. As a legal matter, the site is not coextensive with that area, and the boundaries of the installation or plant are not the ''boundaries'' of the site. Rather, the site consists of all contaminated areas within the area used to identify the site, as well as any other location to which contamination from that area has come to be located, or from which that contamination came.

In other words, while geographic terms are often used to designate the site (e.g., the ''Jones Co. plant site'') in terms of the property owned by a particular party, the site properly understood is not limited to that property (e.g., it may extend beyond the property due to contaminant migration), and conversely may not occupy the full extent of the property (e.g., where there are uncontaminated parts of the identified property, they may not be, strictly speaking, part of the ''site''). The ''site'' is thus neither equal to nor confined by the boundaries of any specific property that may give the site its name, and the name itself should not be read to imply that this site is coextensive with the entire area within the property boundary of the installation or plant. The precise nature and extent of the site are typically not known at the time of listing. Also, the site name is merely used to help identify the geographic location of the contamination. For example, the ''Jones Co. plant site,'' does not imply that the Jones company is responsible for the contamination located on the plant site.

EPA regulations provide that the ''nature and extent of the problem presented by the release'' will be determined by a Remedial Investigation/Feasibility Study (''RI/FS'') as more information is developed on site contamination (40 CFR 300.5). During the RI/FS process, the release may be found to be larger or smaller than was originally thought, as more is learned about the source(s) and the migration of the contamination. However, this inquiry focuses on an evaluation of the threat posed; the boundaries of the release need not be exactly defined. Moreover, it generally is impossible to discover the full extent of where the contamination ''has come to be located'' before all necessary studies and remedial work are completed at a site. Indeed, the boundaries of the contamination can be expected to change over time. Thus, in most cases, it may be impossible to describe the boundaries of a release with absolute certainty.

Further, as noted above, NPL listing does not assign liability to any party or to the owner of any specific property. Thus, if a party does not believe it is liable for releases on discrete parcels of property, supporting information can be submitted to the Agency at any time after a party receives notice it is a potentially responsible party.

For these reasons, the NPL need not be amended as further research reveals more information about the location of the contamination or release.

G. How Are Sites Removed From the NPL?

EPA may delete sites from the NPL where no further response is appropriate under Superfund, as explained in the NCP at 40 CFR 300.425(e). This section also provides that EPA shall consult with states on proposed deletions and shall consider whether any of the following criteria have been met: (i) Responsible parties or other persons have implemented all appropriate response actions required; (ii) All appropriate Superfund-financed response has been implemented and no further response action is required; or (iii) The remedial investigation has shown the release poses no significant threat to public health or the environment, and taking of remedial measures is not appropriate. As of July 10, 2000, the Agency has deleted 213 sites from the NPL.

H. Can Portions of Sites Be Deleted From the NPL as They Are Cleaned Up?

In November 1995, EPA initiated a new policy to delete portions of NPL sites where cleanup is complete (60 FR 55465, November 1, 1995). Total site cleanup may take many years, while portions of the site may have been cleaned up and available for productive use. As of July 10, 2000, EPA has deleted portions of 19 sites.

I. What Is the Construction Completion List (CCL)?

EPA also has developed an NPL construction completion list (''CCL'') to simplify its system of categorizing sites and to better communicate the successful completion of cleanup activities (58 FR 12142, March 2, 1993). Inclusion of a site on the CCL has no legal significance.

Sites qualify for the CCL when: (1) Any necessary physical construction is complete, whether or not final cleanup levels or other requirements have been achieved; (2) EPA has determined that the response action should be limited to measures that do not involve construction (e.g., institutional controls); or (3) The site qualifies for deletion from the NPL.

Of the 213 sites that have been deleted from the NPL, 203 sites were deleted because they have been cleaned up (the other 10 sites were deleted based on deferral to other authorities and are not considered cleaned up). As of July 10, 2000, there are a total of 689 sites on the CCL. This total includes the 213 deleted sites. For the most up-to-date information on the CCL, see EPA's Internet site at *http://www.epa.gov/superfund.*

II. Public Review/Public Comment

A. Can I Review the Documents Relevant to This Proposed Rule?

Yes, documents that form the basis for EPA's evaluation and scoring of the sites

in this rule are contained in dockets located both at EPA Headquarters in Washington, DC and in the Regional offices.

B. How Do I Access the Documents?

You may view the documents, by appointment only, in the Headquarters or the Regional dockets after the appearance of this proposed rule. The hours of operation for the Headquarters docket are from 9 a.m. to 4 p.m., Monday through Friday excluding Federal holidays. Please contact the Regional dockets for hours.

Following is the contact information for the EPA Headquarters docket: Docket Coordinator, Headquarters, U.S. EPA CERCLA Docket Office, Crystal Gateway #1, 1st Floor, 1235 Jefferson Davis Highway, Arlington, VA 22202, 703/603–9232. (Please note this is a visiting address only. Mail comments to EPA Headquarters as detailed at the beginning of this preamble.)

The contact information for the Regional dockets is as follows:

Barbara Callahan, Region 1 (CT, ME, MA, NH, RI, VT), U.S. EPA, Records Center, Mailcode HSC, One Congress Street, Suite 1100, Boston, MA 02114–2023; 617/918–1356.

Ben Conetta, Region 2 (NJ, NY, PR, VI), U.S. EPA, 290 Broadway, New York, NY 10007–1866; 212/637–4435.

Dawn Shellenberger (GCI), Region 3 (DE, DC, MD, PA, VA, WV), U.S. EPA, Library, 1650 Arch Street, Mailcode 3PM52, Philadelphia, PA 19103; 215/814–5364.

Joellen O'Neill, Region 4 (AL, FL, GA, KY, MS, NC, SC, TN), U.S. EPA, 61 Forsyth Street, SW, 9th floor, Atlanta, GA 30303; 404/562–8127.

Region 5 (IL, IN, MI, MN, OH, WI), U.S. EPA, Records Center, Waste Management Division 7–J, Metcalfe Federal Building, 77 West Jackson Boulevard, Chicago, IL 60604; 312/886–7570.

Brenda Cook, Region 6 (AR, LA, NM, OK, TX), U.S. EPA, 1445 Ross Avenue, Mailcode 6SF–RA, Dallas, TX 75202–2733; 214/665–7436.

Carole Long, Region 7 (IA, KS, MO, NE), U.S. EPA, 901 North 5th Street, Kansas City, KS 66101; 913/551–7224.

David Williams, Region 8 (CO, MT, ND, SD, UT, WY), U.S. EPA, 999 18th Street, Suite 500, Mailcode 8EPR–SA, Denver, CO 80202–2466; 303/312–6757.

Carolyn Douglas, Region 9 (AZ, CA, HI, NV, AS, GU), U.S. EPA, 75 Hawthorne Street, San Francisco, CA 94105; 415/744–2343.

Robert Phillips, Region 10 (AK, ID, OR, WA), U.S. EPA, 11th Floor, 1200 6th Avenue, Mail Stop ECL–110, Seattle, WA 98101; 206/553–6699.

You may also request copies from EPA Headquarters or the Regional dockets. An informal request, rather than a formal written request under the Freedom of Information Act, should be the ordinary procedure for obtaining copies of any of these documents.

C. What Documents Are Available for Public Review at the Headquarters Docket?

The Headquarters docket for this rule contains: HRS score sheets for the proposed site; a Documentation Record for the site describing the information used to compute the score; information for any site affected by particular statutory requirements or EPA listing policies; and a list of documents referenced in the Documentation Record.

D. What Documents Are Available for Public Review at the Regional Dockets?

The Regional dockets for this rule contain all of the information in the Headquarters docket, plus, the actual reference documents containing the data principally relied upon and cited by EPA in calculating or evaluating the HRS score for the sites. These reference documents are available only in the Regional dockets.

E. How Do I Submit My Comments?

Comments must be submitted to EPA Headquarters as detailed at the beginning of this preamble in the **ADDRESSES** section. Please note that the addresses differ according to method of delivery. There are two different addresses that depend on whether comments are sent by express mail or by postal mail.

F. What Happens to My Comments?

EPA considers all comments received during the comment period. Significant comments will be addressed in a support document that EPA will publish concurrently with the **Federal Register** document if, and when, the site is listed on the NPL.

G. What Should I Consider When Preparing My Comments?

Comments that include complex or voluminous reports, or materials prepared for purposes other than HRS scoring, should point out the specific information that EPA should consider and how it affects individual HRS factor values or other listing criteria (*Northside Sanitary Landfill* v. *Thomas,* 849 F.2d 1516 (D.C. Cir. 1988)). EPA will not address voluminous comments that are not specifically cited by page number and referenced to the HRS or other listing criteria. EPA will not address comments unless they indicate which component of the HRS documentation record or what particular point in EPA's stated eligibility criteria is at issue.

H. Can I Submit Comments After the Public Comment Period Is Over?

Generally, EPA will not respond to late comments. EPA can only guarantee that it will consider those comments postmarked by the close of the formal comment period. EPA has a policy of not delaying a final listing decision solely to accommodate consideration of late comments.

I. Can I View Public Comments Submitted by Others?

During the comment period, comments are placed in the Headquarters docket and are available to the public on an ''as received'' basis. A complete set of comments will be available for viewing in the Regional docket approximately one week after the formal comment period closes.

J. Can I Submit Comments Regarding Sites Not Currently Proposed to the NPL?

In certain instances, interested parties have written to EPA concerning sites which were not at that time proposed to the NPL. If those sites are later proposed to the NPL, parties should review their earlier concerns and, if still appropriate, resubmit those concerns for consideration during the formal comment period. Site-specific correspondence received prior to the period of formal proposal and comment will not generally be included in the docket.

III. Contents of This Proposed Rule

A. Proposed Additions to the NPL

With today's proposed rule, EPA is proposing to add 7 new sites to the NPL; all to the General Superfund Section of the NPL. The sites in this proposed rulemaking are being proposed based on HRS scores of 28.50 or above. The sites are presented in Table 1 which follows this preamble.

B. Status of NPL

A final rule published elsewhere in today's **Federal Register** finalizes 12 sites to the NPL; resulting in an NPL of 1,238 final sites; 1,078 in the General Superfund Section and 160 in the Federal Facilities Section. With this proposal of 7 new sites, there are now 57 sites proposed and awaiting final agency action, 51 in the General Superfund Section and 6 in the Federal Facilities Section. Final and proposed sites now total 1,295. (These numbers reflect the status of sites as of July 10, 2000. Site deletions occurring after this date may affect these numbers at time of publication in the **Federal Register**.)

IV. Executive Order 12866

A. What Is Executive Order 12866?

Under Executive Order 12866, (58 FR 51735 (October 4, 1993)) the Agency must determine whether a regulatory action is ''significant'' and therefore subject to OMB review and the requirements of the Executive Order. The Order defines ''significant regulatory action'' as one that is likely to result in a rule that may: (1) Have an annual effect on the economy of $100 million or more or adversely affect in a material way the economy, a sector of the economy, productivity, competition, jobs, the environment, public health or safety, or State, local, or tribal governments or communities; (2) create a serious inconsistency or otherwise interfere with an action taken or planned by another agency; (3) materially alter the budgetary impact of entitlements, grants, user fees, or loan programs or the rights and obligations of recipients thereof; or (4) raise novel legal or policy issues arising out of legal mandates, the President's priorities, or the principles set forth in the Executive Order.

B. Is This Proposed Rule Subject to Executive Order 12866 Review?

No, the Office of Management and Budget (OMB) has exempted this regulatory action from Executive Order 12866 review.

V. Unfunded Mandates

A. What Is the Unfunded Mandates Reform Act (UMRA)?

Title II of the Unfunded Mandates Reform Act of 1995 (UMRA), Public Law 104–4, establishes requirements for Federal Agencies to assess the effects of their regulatory actions on State, local, and tribal governments and the private sector. Under section 202 of the UMRA, EPA generally must prepare a written statement, including a cost-benefit analysis, for proposed and final rules with ''Federal mandates'' that may result in expenditures by State, local, and tribal governments, in the aggregate, or by the private sector, of $100 million or more in any one year. Before EPA promulgates a rule for which a written statement is needed, section 205 of the UMRA generally requires EPA to identify and consider a reasonable number of regulatory alternatives and adopt the least costly, most cost-effective, or least burdensome alternative that achieves the objectives of the rule. The provisions of section 205 do not apply when they are inconsistent with applicable law. Moreover, section 205 allows EPA to adopt an alternative other than the least costly, most cost-effective, or least burdensome alternative if the Administrator publishes with the final rule an explanation why that alternative was not adopted. Before EPA establishes any regulatory requirements that may significantly or uniquely affect small governments, including tribal governments, it must have developed under section 203 of the UMRA a small government agency plan. The plan must provide for notifying potentially affected small governments, enabling officials of affected small governments to have meaningful and timely input in the development of EPA regulatory proposals with significant Federal intergovernmental mandates, and informing, educating, and advising small governments on compliance with the regulatory requirements.

B. Does UMRA Apply to This Proposed Rule?

No, EPA has determined that this rule does not contain a Federal mandate that may result in expenditures of $100 million or more for State, local, and tribal governments in the aggregate, or by the private sector in any one year. This rule will not impose any federal intergovernmental mandate because it imposes no enforceable duty upon State, tribal or local governments. Listing a site on the NPL does not itself impose any costs. Listing does not mean that EPA necessarily will undertake remedial action. Nor does listing require any action by a private party or determine liability for response costs. Costs that arise out of site responses result from site-specific decisions regarding what actions to take, not directly from the act of listing a site on the NPL.

For the same reasons, EPA also has determined that this rule contains no regulatory requirements that might significantly or uniquely affect small governments. In addition, as discussed above, the private sector is not expected to incur costs exceeding $100 million. EPA has fulfilled the requirement for analysis under the Unfunded Mandates Reform Act.

VI. Effect on Small Businesses

A. What Is the Regulatory Flexibility Act?

Pursuant to the Regulatory Flexibility Act (5 U.S.C. 601 *et seq.*, as amended by the Small Business Regulatory Enforcement Fairness Act (SBREFA) of 1996) whenever an agency is required to publish a notice of rulemaking for any proposed or final rule, it must prepare and make available for public comment a regulatory flexibility analysis that describes the effect of the rule on small entities (*i.e.*, small businesses, small organizations, and small governmental jurisdictions). However, no regulatory flexibility analysis is required if the head of an agency certifies the rule will not have a significant economic impact on a substantial number of small entities. SBREFA amended the Regulatory Flexibility Act to require Federal agencies to provide a statement of the factual basis for certifying that a rule will not have a significant economic impact on a substantial number of small entities.

B. Has EPA Conducted a Regulatory Flexibility Analysis for This Rule?

No. While this rule proposes to revise the NPL, an NPL revision is not a typical regulatory change since it does not automatically impose costs. As stated above, adding sites to the NPL does not in itself require any action by any party, nor does it determine the liability of any party for the cost of cleanup at the site. Further, no identifiable groups are affected as a whole. As a consequence, impacts on any group are hard to predict. A site's inclusion on the NPL could increase the likelihood of adverse impacts on responsible parties (in the form of cleanup costs), but at this time EPA cannot identify the potentially affected businesses or estimate the number of small businesses that might also be affected.

The Agency does expect that placing the sites in this proposed rule on the NPL could significantly affect certain industries, or firms within industries, that have caused a proportionately high percentage of waste site problems. However, EPA does not expect the listing of these sites to have a significant economic impact on a substantial number of small businesses.

In any case, economic impacts would occur only through enforcement and cost-recovery actions, which EPA takes at its discretion on a site-by-site basis. EPA considers many factors when determining enforcement actions, including not only a firm's contribution to the problem, but also its ability to pay. The impacts (from cost recovery) on small governments and nonprofit organizations would be determined on a similar case-by-case basis.

For the foregoing reasons, I hereby certify that this proposed rule, if promulgated, will not have a significant economic impact on a substantial number of small entities. Therefore, this proposed regulation does not require a regulatory flexibility analysis.

VII. National Technology Transfer and Advancement Act

A. What Is the National Technology Transfer and Advancement Act?

Section 12(d) of the National Technology Transfer and Advancement Act of 1995 (NTTAA), Public Law 104–113, section 12(d) (15 U.S.C. 272 note), directs EPA to use voluntary consensus standards in its regulatory activities unless to do so would be inconsistent with applicable law or otherwise impractical. Voluntary consensus standards are technical standards (*e.g.*, materials specifications, test methods, sampling procedures, and business practices) that are developed or adopted by voluntary consensus standards bodies. The NTTAA directs EPA to provide Congress, through OMB, explanations when the Agency decides not to use available and applicable voluntary consensus standards.

B. Does the National Technology Transfer and Advancement Act Apply to This Proposed Rule?

No. This proposed rulemaking does not involve technical standards. Therefore, EPA did not consider the use of any voluntary consensus standards.

VIII. Executive Order 12898

A. What is Executive Order 12898?

Under Executive Order 12898, ''Federal Actions to Address Environmental Justice in Minority Populations and Low-Income Populations,'' as well as through EPA's April 1995, ''Environmental Justice Strategy, OSWER Environmental Justice Task Force Action Agenda Report,'' and National Environmental Justice Advisory Council, EPA has undertaken to incorporate environmental justice into its policies and programs. EPA is committed to addressing environmental justice concerns, and is assuming a leadership role in environmental justice initiatives to enhance environmental quality for all residents of the United States. The Agency's goals are to ensure that no segment of the population, regardless of race, color, national origin, or income, bears disproportionately high and adverse human health and environmental effects as a result of EPA's policies, programs, and activities, and all people live in clean and sustainable communities.

B. Does Executive Order 12898 Apply to This Proposed Rule?

No. While this rule proposes to revise the NPL, no action will result from this proposal that will have disproportionately high and adverse human health and environmental effects on any segment of the population.

IX. Executive Order 13045

A. What Is Executive Order 13045?

Executive Order 13045: ''Protection of Children from Environmental Health Risks and Safety Risks'' (62 FR 19885, April 23, 1997) applies to any rule that: (1) is determined to be ''economically significant'' as defined under Executive Order 12866, and (2) concerns an environmental health or safety risk that EPA has reason to believe may have a disproportionate effect on children. If the regulatory action meets both criteria, the Agency must evaluate the environmental health or safety effects of the planned rule on children, and explain why the planned regulation is preferable to other potentially effective and reasonably feasible alternatives considered by the Agency.

B. Does Executive Order 13045 Apply to This Proposed Rule?

This proposed rule is not subject to Executive Order 13045 because it is not an economically significant rule as defined by Executive Order 12866, and because the Agency does not have reason to believe the environmental health or safety risks addressed by this proposed rule present a disproportionate risk to children.

X. Paperwork Reduction Act

A. What Is the Paperwork Reduction Act?

According to the Paperwork Reduction Act (PRA), 44 U.S.C. 3501 *et seq.*, an agency may not conduct or sponsor, and a person is not required to respond to a collection of information that requires OMB approval under the PRA, unless it has been approved by OMB and displays a currently valid OMB control number. The OMB control numbers for EPA's regulations, after initial display in the preamble of the final rules, are listed in 40 CFR part 9. The information collection requirements related to this action have already been approved by OMB pursuant to the PRA under OMB control number 2070–0012 (EPA ICR No. 574).

B. Does the Paperwork Reduction Act Apply to This Proposed Rule?

No. EPA has determined that the PRA does not apply because this rule does not contain any information collection requirements that require approval of the OMB.

XI. Executive Orders on Federalism

What Are The Executive Orders on Federalism and Are They Applicable to This Proposed Rule?

Executive Order 13132, entitled ''Federalism'' (64 FR 43255, August 10, 1999), requires EPA to develop an accountable process to ensure ''meaningful and timely input by State and local officials in the development of regulatory policies that have federalism implications.'' ''Policies that have federalism implications'' is defined in the Executive Order to include regulations that have ''substantial direct effects on the States, on the relationship between the national government and the States, or on the distribution of power and responsibilities among the various levels of government.''

Under Section 6 of Executive Order 13132, EPA may not issue a regulation that has federalism implications, that imposes substantial direct compliance costs, and that is not required by statute, unless the Federal government provides the funds necessary to pay the direct compliance costs incurred by State and local governments, or EPA consults with State and local officials early in the process of developing the proposed regulation. EPA also may not issue a regulation that has federalism implications and that preempts State law, unless the Agency consults with State and local officials early in the process of developing the proposed regulation.

This proposed rule does not have federalism implications. It will not have substantial direct effects on the States, on the relationship between the national government and the States, or on the distribution of power and responsibilities among the various levels of government, as specified in Executive Order 13132. Thus, the requirements of section 6 of the Executive Order do not apply to this rule.

XII. Executive Order 13084

What is Executive Order 13084 and Is It Applicable to This Proposed Rule?

Under Executive Order 13084, EPA may not issue a regulation that is not required by statute, that significantly or uniquely affects the communities of Indian tribal governments, and that imposes substantial direct compliance costs on those communities, unless the Federal government provides the funds necessary to pay the direct compliance costs incurred by the tribal governments, or EPA consults with those governments. If EPA complies by consulting, Executive Order 13084

requires EPA to provide to the Office of Management and Budget, in a separately identified section of the preamble to the rule, a description of the extent of EPA's prior consultation with representatives of affected tribal governments, a summary of the nature of their concerns, and a statement supporting the need to issue the regulation. In addition, Executive Order 13084 requires EPA to develop an effective process permitting elected officials and other representatives of Indian tribal governments ''to provide meaningful and timely input in the development of regulatory policies on matters that significantly or uniquely affect their communities.''

This proposed rule does not significantly or uniquely affect the communities of Indian tribal governments because it does not significantly or uniquely affect their communities. Accordingly, the requirements of section 3(b) of Executive Order 13084 do not apply to this proposed rule.

TABLE 1.—NATIONAL PRIORITIES LIST PROPOSED RULE NO. 33, GENERAL SUPERFUND SECTION

State	Site name	City/county
CA	Alark Hard Chrome.	Riverside
KS	Tri-County Public Airport.	Delavan
MA	Nuclear Metals, Inc..	Concord
MA	Sutton Brook Disposal Area.	Tewksbury
MO	Riverfront	New Haven
NJ	Diamond Head Oil Refinery Div..	Kearny
OR	Portland Harbor.	Portland

Number of Sites Proposed to General Superfund Section: 7.

List of Subjects in 40 CFR Part 300

Environmental protection, Air pollution control, Chemicals, Hazardous substances, hazardous waste, Intergovernmental relations, Natural resources, Oil pollution, penalties, Reporting and recordkeeping requirements, Superfund, Water pollution control, Water supply.

Authority: 33 U.S.C. 1321(c)(2); 42 U.S.C. 9601–9657; E.O. 12777, 56 FR 54757, 3 CFR, 1991 Comp., p. 351; E.O. 12580, 52 FR 2923, 3 CFR, 1987 Comp., p. 193.

Dated: July 20, 2000.

Timothy Fields, Jr.,

Assistant Administrator, Office of Solid Waste and Emergency Response.

[FR Doc. 00–18903 Filed 7–26–00; 8:45 am]

BILLING CODE 6560–50–P

DEPARTMENT OF TRANSPORTATION

Coast Guard

46 CFR Part 67

[USCG–1999–6713]

RIN 2115–AF95

Citizenship Standards for Vessel Ownership and Financing; American Fisheries Act

AGENCY: Coast Guard, DOT.

ACTION: Notice of proposed rulemaking.

SUMMARY: The Coast Guard proposes amending citizenship requirements for fishing vessels of less than 100 feet in length that are eligible for a fishery endorsement, by increasing the percentage of interest in a vessel required to be owned and controlled by U.S. citizens in corporations. The percentage increased will be from more than 50 percent to at least 75 percent. We propose adding provisions making fishery endorsements of documented fishing vessels chartered or leased to a person who is not a citizen or to an entity which is ineligible to own a documented fishing vessel invalid. We also propose prohibiting fishery a endorsement for a fishing vessel mortgaged to a trustee if the mortgage interest is issued, assigned, transferred, or held in trust for a person not eligible to own a documented fishing vessel, even if the trustee is eligible to own a documented fishing vessel.

DATES: Comments and related material must reach the Docket Management Facility on or before October 25, 2000. Comments sent to the Office of Management and Budget (OMB) on collection of information must reach OMB on or before September 25, 2000.

ADDRESSES: To make sure your comments and related material are not entered more than once in the docket, please submit them by only one of the following means:

(1) By mail to the Docket Management Facility (USCG–1999–6713), U.S. Department of Transportation, room PL–401, 400 Seventh Street SW., Washington, DC 20590–0001.

(2) By delivery to room PL–401 on the Plaza level of the Nassif Building, 400 Seventh Street SW., Washington, DC, between 9 a.m. and 5 p.m., Monday through Friday, except Federal holidays. The telephone number is 202–366–9329.

(3) By fax to the Docket Management Facility at 202–493–2251.

(4) Electronically through the Web Site for the Docket Management System at http://dms.dot.gov.

You must also mail comments on collection of information to the Office of Information and Regulatory Affairs, Office of Management and Budget, 725 17th Street NW., Washington, DC 20503, ATTN: Desk Officer, U.S. Coast Guard.

The Docket Management Facility maintains the public docket for this rulemaking. Comments and material received from the public, as well as documents mentioned in this preamble as being available in the docket, will become part of this docket and will be available for inspection or copying at room PL–401 on the Plaza level of the Nassif Building, 400 Seventh Street SW., Washington, DC, between 9 a.m. and 5 p.m., Monday through Friday, except Federal holidays. You may also find this docket on the Internet at http://dms.dot.gov.

FOR FURTHER INFORMATION CONTACT: For questions on this proposed rule, call Patricia J. Williams, Coast Guard, telephone 304–271–2400. For questions on viewing or submitting material to the docket, call Dorothy Walker, Chief, Dockets, Department of Transportation, telephone 202–366–9329.

SUPPLEMENTARY INFORMATION:

Request for Comments

We encourage you to participate in this rulemaking by submitting comments and related material. If you do so, please include your name and address, identify the docket number for this rulemaking (USCG–1999–6713), indicate the specific section of this document to which each comment applies, and give the reason for each comment. You may submit your comments and material by mail, hand delivery, fax, or electronic means to the Docket Management Facility at the address under **ADDRESSES**; but please submit your comments and material by only one means. If you submit them by mail or hand delivery, submit them in an unbound format, no larger than 8½ by 11 inches, suitable for copying and electronic filing. If you submit them by mail and would like to know they reached the Facility, please enclose a stamped, self-addressed postcard or envelope. We will consider all comments and material received during the comment period. We may change this proposed rule in view of them.

Public Meeting

We do not now plan to hold a public meeting. But you may submit a request for one to the Docket Management Facility at the address under **ADDRESSES** explaining why one would be beneficial. If we determine that one would aid this rulemaking, we will hold one at a time and place announced by a later notice in the **Federal Register**.

Background and Purpose

The Americanization of the U.S. fishing industry began in 1976 with the passage of the Magnuson Fishery Conservation and Management Act which established a 200 mile Exclusive Economic Zone (EEZ) around the United States coastlines and prioritized access to fishery resources within the EEZ to American citizens. It was an important step in securing American control of the vast fishery resources off our coastlines.

Eleven years later another step was taken to further Americanize U.S. fisheries. The Commercial Fishing Industry Vessel Anti-Reflagging Act of 1987 (Pub. L. 100–239) required U.S. citizens to own and control more than 50 percent of any U.S.-flag fishing vessel. As the last of the foreign-flag fishing vessels in U.S. fisheries were being replaced by U.S.-flag vessels in 1986, federal law did not require U.S. fishing vessels to carry U.S. crew members. Federal law also allowed U.S. fishing vessels essentially to be built in foreign shipyards under an existing regulatory definition of ''rebuild.''

The goals of the 1987 Anti-Reflagging Act were to (1) require U.S. control of fishing vessels that fly the U.S. flag; (2) stop the foreign rebuilding of U.S.-flag vessels under the ''rebuild'' loophole; and (3) require U.S.-flag fishing vessels to carry U.S. crews. Of these three goals, only the U.S. crew requirement was fully achieved. The Anti-Reflagging Act did not completely stop foreign interest from owning and controlling U.S.-flag fishing vessels because it included grandfather provisions that exempted any existing U.S.-flag fishing vessel from the new ownership standard. The Act also allowed vessels, under contract during specified time frames, to be rebuilt into fishing vessels in foreign shipyards while retaining their U.S. fishing privileges indefinitely. The two grandfather provisions allowed more foreign owned and controlled fishing vessels to remain in U.S. fisheries than had been intended.

The American Fisheries Act (AFA), along with the repeal of the ''grandfather'' provisions of the Commercial Fishing Industry Vessel Anti-Reflagging Act of 1987, finally resolves this issue. The AFA requires a real, effective, and enforceable U.S. ownership threshold for U.S.-flag fishing vessels. Under this Act, U.S. citizens must own and control at least 75 percent of the ownership interest in any U.S.-flag fishing vessel. The Act is intended to ensure that vessels with a fishery endorsement are truly controlled by citizens of the U.S. The Act also increases the penalties for fishery endorsement violations and is intended to discourage willful noncompliance with the new requirements.

Discussion of Proposed Rule

As mandated by the 105th U.S. Congress, we propose revising the regulations outlining fishery endorsement eligibilty requirements for fishing vessels less than 100 feet in length. These revisions would remove ''grandfather'' provisions of the Commercial Fishing Industry Vessel Anti-reflagging Act of 1987. The rule would increase the percent of interest in a fishing vessel that must be owned and controlled by U.S. citizens in a corporation from more than 50 percent to at least 75 percent. It would also add provisions making a fishery endorsement invalid for a documented fishing vessel charted or leased to a person who is not a citizen or to an entity which is ineligible to own a documented fishing vessel. It would restrict fishery endorsements for fishing vessels mortgaged through a foreign lender or trustee and establish application procedures and requirements for fishery endorsement exemptions. It would revise the term ''control'' as it relates to citizenship requirements for stock or equity interest in fishing vessels. This rule would add penalties for falsifying fishery endorsement application materials. Finally this rule would establish petition procedures for an exemption from the citizenship requirements of this rule if you have a foreign vessel less than 75 percent U.S. citizen controlled fishing with a fishery endorsement before October 1, 2001.

Citizenship Requirements for U.S.-flag Fishing Vessels With a Fishery Endorsement

The American Fisheries Act (AFA) ensures U.S. control of fishery resources within the exclusive economic zone (EEZ) and closes the loophole for foreign rebuilding of U.S.-flag fishing vessels created under the Commercial Fishing Industry Vessel Anti-Reflagging Act of 1987. Under the AFA, U.S. citizens must own and control at least 75 percent of the ownership interest in any U.S.-flag fishing vessel. The Act is intended to ensure that vessels with a fishery endorsement, and thus fishing within our EEZ, are truly controlled by citizens of the U.S. The Act also increases the penalties for fishery endorsement violations and is intended to discourage willful noncompliance with new requirements. To achieve the intent of the Act the following changes to 46 CFR part 67 are proposed:

(a) *Removing ''grandfather'' provisions of the Commercial Fishing Industry Vessel Anti-reflagging Act of 1987.* The incorporation of the Commercial Fishing Industry Vessel Anti-Reflagging Act of 1987 (Pub. L. 100–239) was repealed from the AFA, therefore the rulemaking would remove *Section 67.45 Citizenship savings provision for fishing vessels.*

(b) *Increasing the percent of interest in a fishing vessel required to be owned and controlled by U.S. citizens in corporations, partnerships, associations, and joint ventures.* The eligibility requirements for fishery endorsements of vessels that are less than 100 feet would be revised. 46 CFR 67.35, 67.36, 67.37, 67.39 would be revised to reflect an increase in the percentage of the vessel that must be owned and controlled by a U.S. citizen from more than 50 percent to at least 75 percent. A vessel owned and controlled by a corporation, partnership (including limited liability), association, trust, joint venture, or any other entity, is not eligible for a fishery endorsement under section 12108 of 46 U.S.C. unless at least 75 percent of the vessel's interest is controlled and owned by citizens of the United States. This proposed requirement would apply to each tier of a vessel's ownership and to the vessel ownership in its aggregate.

(c) *Restricting fishing vessel charters and leases.* The proposed rule would add an eligibility restriction for non-citizen controlled fishing vessel charters and leases to § 67.21. Section 67.11 would be amended by removing paragraphs (b)(1) and (3), leaving recreational vessels as the only exemption from restrictions on charters and leases to non-U.S. citizens. These changes will prevent a vessel chartered or leased to an individual who is not a citizen of the United States, or any entity not eligible to own a vessel with a fishery endorsement, from obtaining a fishery endorsement. These revisions would also immediately invalidate fishery endorsements for vessels that do not meet the new 75 percent ownership threshold.

(d) *Restricting fishery endorsement of foreign controlled mortgages of a fishing vessel.* The proposed rule would add

section 67.21(e) reflecting that an individual or entity that is otherwise eligible to own a vessel with a fishery endorsement will become ineligible when a mortgage of the vessel to a trustee eligible to own a fishing vessel with a fishery endorsement is issued, assigned, transferred, or held in trust for a person not eligible to own a vessel with a fishery endorsement.

In order for an owner of a vessel of less than 100 feet to be eligible to obtain a fishery endorsement to the vessel's documentation, it must demonstrate that: (1) At least 75 percent of the interest in the entity that owns the vessel is owned by United States citizens; and (2) at least 75 percent of the control of the entity that owns the vessel is owned by and vested in United States citizens. Evidence of United States citizen ownership of a vessel owning entity is demonstrated through the filing of an affidavit of United States citizenship as provided for in § 356.5. The affidavit of U.S. citizenship requires the owner to provide relevant information to demonstrate that it qualifies as a citizen of the United States within the meaning of 46 App. U.S.C. 12102(c), section 2(c) of the 1916 Act, 46 App. U.S.C. 802(c), and 46 CFR 356.3. The form of this affidavit is substantially the same as the one set forth at 46 CFR part 355.

(e) *Redefining ''control'' as it relates to citizenship requirements for stock or equity interest in fishing vessels.* The term ''control'' under § 67.31(b) would be redefined to include having the right to direct the business of the entity that owns the vessel. It would include having the right to limit the actions of or replace the chief executive officer, the majority of the board of directors, any general partner, or any person serving in a management capacity of the entity that owns the vessel. It also would include having the right to direct the transfer, the operation, or the manning of a vessel with a fishery endorsement.

(f) *Adding penalties for falsifying fishery endorsement application materials.* We propose adding § 67.142 establishing penalties for knowingly or unknowingly submitting fishery endorsement application materials with false information. If the vessel owner or an agent of the owner knowingly conceals a material fact or falsely represents the vessel's eligibility for endorsement when initially applying for or renewing a fishery endorsement, the proposed penalties would make the owner of the vessel liable (under 46 U.S.C. 12122(a) through (c)) to the United States Government for a civil penalty of up to $100,000 for each day in which the vessel has illegally engaged in fishing within the EEZ of the United States. If the vessel owner or an agent of the owner unknowingly commits the same offense the owner of the vessel is liable to the U.S. Government for a civil penalty of up to $10,000 for each day in which the vessel has illegally engaged in fishing within the EEZ of the United States.

(g) *Providing fishery endorsement application procedures for fishing vessels 100 feet and greater in length.* We propose to add a paragraph to § 67.141 which will direct fishing vessels 100 feet and greater in length to meet MARADs requirements, found in 46 CFR 356, and to submit materials required by § 67.141(a) to NVDC.

(h) *Establishing application procedures and requirements for fishery endorsement exemptions.* We propose adding subpart V entitled ''Exemption from Fishery Endorsement Requirements Due to Conflict with International Agreements.'' Establishing this proposed subpart will allow owners or mortgagees of fishing vessels, which believe that an international agreement or treaty to which the United States is a party conflicts with the regulations set out in 46 CFR part 67, to submit the proper materials as a petition for an exemption from specific or all requirements of this part to the National Vessel Documentation Center (NVDC). If you are an owner or mortgagee of a fishing vessel less than 100 feet in length and believe that there is a conflict between 46 CFR part 67 and any international treaty or agreement to which the United States is a party, you may petition the National Vessel Documentation Center (NVDC) for a ruling that all or sections of part 67 do not apply to you. You may file your petition with the NVDC before October 1, 2001, with respect to international treaties or agreements in effect at the time of your petition which are not scheduled to expire before October 1, 2001. If you are filing a petition for exemption with the NVDC for reasons stated in this paragraph your petition must include:

(1) Department of Transportation, U.S. Coast Guard, form CG–1258 entitled ''Application for Initial Issue, Exchange, or Replacement of Certificate of Documentation; Redocumentation'' as evidence of the ownership structure of the vessel. This form should provide any subsequent changes to the ownership structure of the vessel since its initial certification,

(2) A copy of the provisions of the international agreement or treaty and a written description of how you believe those provisions conflict with the requirements of this rule,

(3) For all petitions filed after October 1, 2001, a certification that no ownership interest was transferred to a non-U.S. citizen after September 30, 2001.

(4) You must file a separate petition for each vessel requiring an exemption unless the NVDC authorizes consolidated filing. Petitions should include two copies of all required materials and should be sent to the following address: National Vessel Documentation Center, 792 T.J. Jackson Drive, Falling Water, West Virginia, 25419.

Upon receipt of a complete petition, the NVDC will review the petition to determine whether the effective international treaty or agreement and the requirements of this part are in conflict. If the NVDC determines that this part conflicts with the effective international treaty or agreement, then the NVDC will inform you of the guidelines and requirements you must meet and maintain to qualify for a fisheries endorsement.

Regulatory Evaluation

This proposed rule is not a ''significant regulatory action'' under section 3(f) of Executive Order 12866 and does not require an assessment of potential costs and benefits under section 6(a)(3) of that Order. The Office of Management and Budget has not reviewed it under that Order. It is not ''significant'' under the regulatory policies and procedures of the Department of Transportation (DOT)(44 FR 11040, February 26, 1979). We expect the economic impact of this proposed rule to be so minimal that a full Regulatory Evaluation under paragraph 10e of the regulatory policies and procedures of DOT is unnecessary. However, we have included a summary of the analysis documentation.

The Marine Safety Management System (MSMS) shows that about 36,000 vessels have fishery endorsements. The proposed regulation would impact documented vessels with fishery endorsements that are less than 100 feet. About 35,500 vessels with fishery endorsements are less than 100 feet. Of these, we researched a random sample of 1,010 vessels in order to achieve a 95 percent confidence level. We found that the proposed change to minimum U.S. ownership requirements from ''more than 50 percent'' to ''at least 75 percent'' would affect one of the vessels in the random sample. This means that 0.099 percent of the random sample do not meet the proposed requirement. The margin of error is plus

or minus 3.04 percent. Applying this percentage to the population, we expect that the owner of 35 vessels would not meet the proposed change in owner citizenship requirement if current ownership levels in each company remain the same (0.099 percent of 35,500 vessels).

In the random sample, there are 843 vessels (83 percent of the affected population) that are owned by individual persons and 167 vessels (17 percent of the affected population) that are owned by corporations or companies. All individual owners are already required to be U.S. citizens in order to document a vessel. Therefore these vessels and individuals are considered to meet the citizenship requirement, and have 100 percent U.S. ownership. Corporations, partnerships or limited liability companies are required to attest to the level of ownership by U.S. citizens by checking a box in the application for documentation. The ''Application for Initial Issue, Exchange, or Replacement of Certificate of Documentation; Redocumentation'' (CG–1258 (REV.9–97)) has four choices for reporting the level of ownership by U.S. citizens in a corporation. The choices are: Less than 50 percent, at least 50 percent, more than 50 percent but less than 75 percent, and 75 percent or more. One hundred sixty six (166) corporations certified that the ownership level by U.S. citizens is 75 percent or more. One certified that its corporation's percentage of stock owned by U.S. citizens whom are eligible to document vessels was more than 50 percent but less than 75 percent.

Costs: For further analysis, we assume that the 35 adversely affected vessel owners have more than 50 but less than 75 percent of stock owned by U.S. citizens. We further assume that each vessel owner prefers to continue fishing in the Exclusive Economic Zone of the United States. Therefore, we expect each vessel owning company would make changes to its U.S. ownership level. The change of U.S. ownership level could entail the following: Adding an additional investor, selling stock to U.S. citizens, adding a partner, or removing a partner.

Once each vessel owning company has met the proposed ownership criteria, the vessel's fishery endorsement would be renewed as it would have been in any other year. Thus, the cost of this proposed rulemaking would be directly associated with the change of U.S. ownership level made by each of the 35 vessel owning companies. We assume that each company would hire a law firm to complete the articles of incorporation or any other documents needed to reflect the changes to the ownership levels, and that the law firm would charge about $600 for its services. The one time cost of changing the ownership structure for the 35 companies would be $21,000.

We do not expect the proposed restriction to leases and charters by non-U.S. citizens to impact any vessel owners. Similarly, we do not expect the restriction on foreign controlled mortgages to impact any vessels. Therefore, these proposed regulations would cause no additional cost to vessel owners, operators, or managers.

Benefits: The changes in the law necessitate this proposed rulemaking. The proposed regulation would give U.S. citizens a higher level of ownership in the vessels that harvest fish in the U.S. Exclusive Economic Zone. Consequently more of the profits from the fishery industry will accrue to U.S. citizens.

Small Entities

Under the regulatory Flexibility Act (5 U.S.C. 601–612), we considered whether this proposed rule would have a significant impact on a substantial number of small entities. The term ''small entities'' comprises small businesses, not-for-profit organizations that are independently owned and operated and are not dominant in their fields, and governmental jurisdictions with populations of less than 50,000.

The proposed rule would impact the owners of about 35,500 vessels that are documented with fishery endorsements. These vessels are less than 100 feet in length, and we considered each one to be owned by a small entity. As shown by the sample statistics, we expect 35 entities to be adversely affected by the proposed rulemaking. We do not consider the number of adversely affected entities to be a substantial number for they represent 0.099 percent of all entities that would have to comply with the proposed requirements.

The Small Business Administration has determined that the size standard for small businesses involved in the fishing industry is $3 million in annual revenues (Standard Industry Codes 0912, 0913, 0919, and 0921). The imposed burden of $600 would represent 0.02 percent for entities with $3 million in annual revenues. For entities with $60,000 and $30,000 in annual revenues, the burden would represent 1 percent and 2 percent of annual revenues, respectively. We do not consider this cost to create a significant economic impact on the affected entities.

Therefore, the Coast Guard certifies under 5 U.S.C. 605(b) that this proposed rule would not have a significant economic impact on a substantial number of small entities. If you think that your business, organization, or governmental jurisdiction qualifies as a small entity and that this rule would have a significant economic impact on it, please submit a comment to the Docket Management Facility at the address under **ADDRESSES**. In your comment, explain why you think it qualifies and how and to what degree this rule would economically affect it.

Assistance for Small Entities

Small businesses may send comments on the actions of Federal employees who enforce, or otherwise determine compliance with, Federal regulations to the Small Business and Agriculture Regulatory Enforcement Ombudsman and the Regional Small Business Regulatory Fairness Boards. The Ombudsman evaluates these actions annually and rates each agency's responsiveness to small business. If you wish to comment on actions by employees of the Coast Guard, call 1–888–REG–FAIR (1–888–734–3247).

Collection of Information

The proposed rule would call for a collection of information under the Paperwork Reduction Act of 1995 (44 U.S.C. 3501–3520). As defined in 5 CFR 1320.3(c), ''collection of information'' comprises reporting, recordkeeping, monitoring, posting, labeling, and other similar actions. The title and description of the information collections, a description of those who must collect the information, and an estimate of the total annual burden follow. The estimate covers the time for reviewing instructions, searching existing sources of data, gathering and maintaining the data needed, and completing and reviewing the collection.

The information collection requirements of the rule are addressed in the previously approved OMB collection titled ''Vessel Documentation'' (OMB 2115–0110).

Title: Vessel Documentation.

Summary of the Collection of Information: The proposed rulemaking would add a new collection of information burden to companies that would no longer meet the proposed threshold of at least 75 percent ownership by U.S. citizens. The proposed regulation would allow these companies to apply for an exemption from the proposed U.S. ownership level. The proposed application and related submissions would comprise a new collection of information burden.

Need for Information: The proposed subpart V (§§ 67.350 and 67.352) would specify the application procedure for an exemption from the proposed U.S. ownership level to vessel owners that would no longer meet this threshold. The information is needed to document the international treaties on which the claim for exemption is based, and to attest that vessel owners would not change their ownership structure.

Proposed Use of Information: The information requested would be used by the Coast Guard's National Vessel Documentation Center to determine the validity of the claim for exemption.

Description of Respondents: This collection of information would affect vessel owners who would no longer meet the proposed U.S. ownership level, and wish to apply for exemption.

Number of Respondents: We estimate that none of the 35 adversely affected vessel owners would apply for exemption.

Frequency of Response: The endorsements on each vessel's certificate of documentation are renewed every year. Vessel owners would have to apply for exemption every time an application for renewal of a fishery endorsement is sent into the National Vessel Documentation Center.

Burden of Response: We do not expect the proposed requirement to create any additional burden. Therefore, the additional burden of response attributed to the collection (OMB 2115–0110)) would be 0 hours. In the case that a vessel owner applies for exemption, we assume that information gathering and response burden would be two (2) hours per response.

Estimate of Total Annual Burden: The additional annual burden attributed to the collection (OMB 2115–0110) would be $0 because we do not expect any vessel owners to apply for exemption.

Public Comments on the Collection of Information: As required by 44 U.S.C. 3507(d), we have submitted a copy of this rule to the Office of Management and Budget (OMB) for its review of the collection of information.

We ask for public comment on the proposed collection of information to help us determine how useful the information is; whether it can help us perform our functions better; whether it is readily available elsewhere; how accurate our estimate of the burden of collection is; how valid our methods for determining burden are; how we can improve the quality, usefulness, and clarity of the information; and how we can minimize the burden of collection.

If you submit comments on the collection of information, submit them both to OMB and to the Docket Management Facility where indicated under **ADDRESSES**, by the date under **DATES**.

You need not respond to a collection of information unless it displays a currently valid control number from OMB. Before the requirements for this collection of information become effective, we will publish notice in the **Federal Register** of OMB's decision to approve, modify, or disapprove the collection.

Federalism

We have analyzed this proposed rule under E.O. 13132 and have determined that it does not have implications for federalism under that Order.

Unfunded Mandates Reform Act

The Unfunded Mandates Reform Act of 1995 (2 U.S.C. 1531–1538) requires Federal agencies to assess the effects of their regulatory actions not specifically required by law. In particular, the Act addresses actions that may result in the expenditure by a State, local, or tribal government, in the aggregate, or by the private sector of $100,000,000 or more in any one year. Though this proposed rule would not result in such an expenditure, we do discuss the effects of this rule elsewhere in this preamble.

Taking of Private Property

This proposed rule would not effect a taking of private property or otherwise have taking implications under E.O. 12630, Governmental Actions and Interference with Constitutionally Protected Property Rights.

Civil Justice Reform

This proposed rule meets applicable standards in sections 3(a) and 3(b)(2) of E.O. 12988, Civil Justice Reform, to minimize litigation, eliminate ambiguity, and reduce burden.

Protection of Children

We have analyzed this proposed rule under E.O. 13045, Protection of Children from Environmental Health Risks and Safety Risks. This rule is not an economically significant rule and does not concern an environmental risk to health or risk to safety that may disproportionately affect children.

Environment

We considered the environmental impact of this proposed rule and concluded that preparation of an Environmental Impact Statement is not necessary. An Environmental Assessment and a draft Finding of No Significant Impact are available in the docket where indicated under **ADDRESSES.**

List of Subjects in 46 CFR Part 67

Citizenship; Fishery endorsements, Fishing vessels, Mortgages, Penalties, Vessel Documentation.

For the reasons discussed in the preamble, the Coast Guard proposes to amend 46 CFR part 67 as follows:

PART 67—DOCUMENTATION OF VESSELS

1. The authority citation for part 67 continues to read as follows:

Authority: 14 U.S.C. 664; 31 U.S.C. 9701; 42 U.S.C 9118; 46 U.S.C. 2103, 2107, 2110; 46 U.S.C. app. 841a, 876; 49 CFR 1.45, 1.46.

2. Amend § 67.11 by revising paragraph (b) and the Note to read as follows:

§ 67.11 Restriction on transfer of an interest in documented vessels to foreign persons; foreign registry or operation.

* * * * *

(b) The restrictions in paragraph (a)(2) of this section do not apply to a vessel that has operated only as a recreational vessel.

Note: For purposes of carrying out its responsibilities under the provisions of this part only, the Coast Guard will deem a vessel documented exclusively with a recreational endorsement from the time it was first documented, or for a period of not less than one year prior to foreign transfer or registry, to qualify for the exemption granted in paragraph (b) of this section.

3. Amend § 67.21 by revising paragraph (d) and adding paragraph (e) to read as follows:

§ 67.21 Fishery Endorsement.

* * * * *

(d) A vessel otherwise eligible for a fishery endorsement under paragraph (b) of this section loses that eligibility during any period in which it is:

(1) Owned by a partnership which does not meet the requisite citizenship requirements of § 67.35(b);

(2) Owned by a corporation which does not meet the citizenship requirements of § 67.39(b); or

(3) Chartered or leased to an individual who is not a citizen of the United States or to an entity that is not eligible to own a vessel with a fishery endorsement.

(e) An individual or entity that is otherwise eligible to own a vessel with a fishery endorsement shall be ineligible if an instrument or evidence of indebtedness, secured by a mortgage of the vessel, to a trustee eligible to own a vessel with a fishery endorsement is issued, assigned, transferred, or held in trust for a person not eligible to own a vessel with a fishery endorsement, unless the Commandant determines that

the issuance, assignment, transfer, or trust arrangement does not result in an impermissible transfer of control of the vessel and that the trustee:

(1) Is organized as a corporation that meets § 67.39(b) of this part, and is doing business under the laws of the United States or of a State;

(2) Is authorized under those laws to exercise corporate trust powers which meet § 67.36(b) of this part;

(3) Is subject to supervision or examination by an official of the United States Government or a State;

(4) Has a combined capital and surplus (as stated in its most recent published report of condition) of at least $3,000,000; and

(5) Meets any other requirements prescribed by the Commandant.

4. Revise § 67.31(b) to read as follows:

§ 67.31 Stock or equity interest requirements.

* * * * *

(b) For the purpose of stock or equity interest requirements for citizenship under this subpart, control means having:

(1) The right to direct the business of the entity that owns the vessel;

(2) The right to limit the actions of or to replace the chief executive officer, the majority of the board of directors, any general partner, or any person serving in a management capacity of the entity that owns the vessel; or

(3) The right to direct the transfer, the operation, or the manning of a vessel with a fishery endorsement.

* * * * *

5. In § 67.35, revise the introductory text and paragraph (b) to read as follows:

§ 67.35 Partnership.

A partnership meets citizenship requirements if all its general partners are citizens, and:

* * * * *

(b) For the purpose of obtaining a fishery endorsement, at least 75 percent of the equity interest in the partnership, at each tier of the partnership and in the aggregate, is owned by citizens.

* * * * *

6. Amend § 67.36 by revising the introductory text of paragraphs (a), (b), and (c) and by revising paragraph (b)(2) to read as follows:

§ 67.36 Trust.

(a) For the purpose of obtaining a registry or recreational endorsement, a trust arrangement meets citizenship requirements if:

* * * * *

(b) For the purpose of obtaining a fishery endorsement, a trust arrangement meets citizenship requirements if:

* * * * *

(2) At least 75 percent of the equity interest in the trust, at each tier of the trust and in the aggregate, is owned by citizens.

(c) For the purpose of obtaining a coastwise or Great Lake endorsement or both, a trust arrangement meets citizenship requirements if:

* * * * *

7. Revise § 67.37 to read as follows:

§ 67.37 Association or joint venture.

(a) An association meets citizenship requirements if each of its members is a citizen.

(b) A joint venture meets citizenship requirements if each of its members is a citizen.

8. Amend § 67.39 by revising the introductory text of paragraphs (a), (b), and (c) and by revising paragraph (b)(2) to read as follows:

§ 67.39 Corporation.

(a) For the purpose of obtaining a registry or a recreational endorsement, a corporation meets citizenship requirements if:

* * * * *

(b) For the purpose of obtaining a fishery endorsement, a corporation meets citizenship requirements if:

* * * * *

(2) At least 75 percent of the stock interest in the corporation, at each tier of the corporation and in the aggregate, is owned by citizens.

(c) For the purpose of obtaining a coastwise or Great Lakes endorsement or both, a corporation meets citizenship requirements if:

* * * * *

§ 67.45 [Removed]

9. Remove § 67.45.

10. Amend § 67.141 by revising paragraph (b) and adding paragraph (c) to read as follows:

§ 67.141 Application procedure; all cases.

* * * * *

(b) Each vessel 100 feet and greater in length applying for a fishery endorsement must meet the requirements of 46 CFR part 356 and must submit materials required in paragraph (a) of this section.

(c) Upon receipt of the Certification of Documentation and prior to operation of the vessel, ensure that the vessel is marked in accordance with the requirements set forth in subpart I of this part.

11. Add § 67.142 to read as follows:

§ 67.142 Penalties.

(a) An owner or operator of a vessel with a fishery endorsement who violates Chapter 121 of Title 46, U.S. Code or any regulation issued thereunder is liable to the United States Government for a civil penalty of not more than $10,000. Each day of a continuing violation is a separate violation.

(b) A fishing vessel and its equipment are liable to seizure and forfeiture to the United States Government—

(i) When the owner of the fishing vessel, or the representative or agent of the owner, knowingly falsifies applicable information or knowingly conceals a material fact during the application process for or application process to renew a fishery endorsement of the vessel;

(ii) When the owner of the fishing vessel, or the representative or agent of the owner, knowingly and fraudulently uses a vessel's certificate of documentation;

(iii) When the fishing vessel engages in fishing (as such term is defined in section 3 of the Magnuson-Stevens Fishery Conservation and Management Act (16 U.S.C. 1802)) within the Exclusive Economic Zone around the United States coastlines after its fishery endorsement has been denied or revoked;

(iv) When a vessel is employed in a trade without an appropriate trade endorsement;

(v) When a documented vessel with only a recreational endorsement operates as a fishing vessel; or

(vi) When a vessel with a fishery endorsement is commanded by a person who is not a citizen of the United States.

(c) In addition to penalties under paragraphs (a) and (b) of this section, the owner of a vessel with a fishery endorsement is liable to the United States Government for a civil penalty of up to $100,000 for each day in which the vessel has engaged in fishing within the exclusive economic zone of the United States, if the owner of the fishing vessel, or the representative or agent of the owner, knowingly falsifies applicable information or knowingly conceals a material fact during the application process for or application process to renew a fishery endorsement of the vessel.

12. Revise § 67.233(b) to read as follows:

§ 67.233 Restrictions on recording mortgages, preferred mortgages, and related instruments.

* * * * *

(b) A mortgage of a vessel 100 feet or greater in length applying for a fishery endorsement is eligible for filing and

recording as a preferred mortgage only if it meets the requirements of this part and the requirements of 46 CFR 356.19.

* * * * *

13. Add subpart V to read as follows:

Subpart V—Exemption from Fishery Endorsement Requirements Due to Conflict With International Agreements

Sec.
67.350 Conflicts with international agreements.
67.352 Applicability.

Subpart V—Exemption from Fishery Endorsement Requirements Due to Conflict With International Agreements

§ 67.350 Conflicts with international agreements.

(a) If you are an owner or mortgagee of a fishing vessel less than 100 feet in length and believe that there is a conflict between this part 67 and any international treaty or agreement to which the United States is a party on October 1, 2001, and to which the United States is currently a party, you may petition the National Vessel Documentation Center (NVDC) for a ruling that all or sections of this part 67 do not apply to you with respect to a particular vessel, provided that you had an ownership interest in the vessel or a mortgage on the vessel on October 1, 2001. You may file your petition with the NVDC before October 1, 2001, with respect to international treaties or agreements in effect at the time of your petition which are not scheduled to expire before October 1, 2001.

(b) If you are filing a petition for exemption with the NVDC for reasons stated in paragraph (a) of this section, your petition must include:

(1) Evidence of the ownership structure of the vessel petitioning for an exemption as of October 1, 2001, and any subsequent changes to the ownership structure of the vessel;

(2) A copy of the provisions of the international agreement or treaty that you believe is in conflict with this part;

(3) A detailed description of how the provisions of the international agreement or treaty conflict with this part;

(4) For all petitions filed before October 1, 2001, a certification that the owner intends to transfer no ownership interest in the vessel to a non-U.S. citizen for the following year.

(5) For all petitions filed after October 1, 2001, a certification that no ownership interest was transferred to a non-U.S. citizen after September 30, 2001.

(c) You must file a separate petition for each vessel requiring an exemption unless the NVDC authorizes consolidated filing. Petitions should include two copies of all required materials and should be sent to the following address: National Vessel Documentation Center, 792 TJ Jackson Drive, Falling Water, West Virginia, 25419.

(d) Upon receipt of a complete petition, the NVDC will review the petition to determine whether the effective international treaty or agreement and the requirements of this part are in conflict. If the NVDC determines that this part conflicts with the effective international treaty or agreement, then the NVDC will inform you of the guidelines and requirements you must meet and maintain to qualify for a fisheries endorsement.

(e) If the vessel is determined through the petition process to be exempt from all or sections of the requirements of this part, then you must annually, from the date of exemption, submit the following evidence of its ownership structure to the NVDC:

(1) The vessel's current ownership structure;

(2) The identity of all non-citizen owners and the percentages of their ownership interest in the vessel;

(3) Any changes in the ownership structure that have occurred since you last submitted evidence of the vessel's ownership structure to the NVDC; and

(4) A statement ensuring that no interest in the vessel was transferred to a non-citizen during the previous year.

§ 67.352 Applicability.

The exemption in this subpart shall not be available to:

(a) Owners and mortgagees of a fishing vessel less than 100 feet in length who acquired an interest in the vessel after October 1, 2001; or

(b) Owners of a fishing vessel less than 100 feet in length, if any ownership interest in that vessel is transferred to or otherwise acquired by a non-U.S. citizen after October 1, 2001.

Dated: July 19, 2000.

Joseph J. Angelo,

Acting Assistant Commandant for Marine Safety and Environmental Protection.

[FR Doc. 00–18941 Filed 7–26–00; 8:45 am]

BILLING CODE 4910–15–U

DEPARTMENT OF TRANSPORTATION

Coast Guard

46 CFR Parts 110 and 111

[USCG–1999–6096]

RIN 2115–AF89

Marine Shipboard Electrical Cable Standards

AGENCY: Coast Guard, DOT.

ACTION: Notice of proposed rulemaking; reopening of comment period.

SUMMARY: The Coast Guard is reopening the period for public comment on its notice of proposed rulemaking (NPRM) on Marine Shipboard Electrical Cable Standards. Because of several requests for additional time to comment, the Coast Guard is reopening the comment period for 45 days.

DATES: Comments must reach the Coast Guard on or before September 11, 2000.

ADDRESSES: Please submit your comments and related material by any one of the following methods (but by only one, to avoid multiple listings in the public docket):

(1) By mail to the Docket Management Facility, [USCG–1999–6096], U.S. Department of Transportation, room PL–401, 400 Seventh Street SW., Washington, DC 20590–0001.

(2) By delivery to room PL–401 on the Plaza level of the Nassif Building, 400 Seventh Street SW., Washington, DC, between 9 a.m. and 5 p.m., Monday through Friday, except Federal holidays. The telephone number is 202–366–9329.

(3) By fax to the Docket Management Facility at 202–493–2251.

(4) Electronically through the Web Site for the Docket Management System at http://dms.dot.gov.

FOR FURTHER INFORMATION CONTACT: For questions on the substance of the rulemaking, call Dolores Mercier, Project Manager, Office of Design and Engineering Standards, (G–MSE), Coast Guard, telephone 202–267–0658. For questions on viewing or submitting material to the docket, call Ms. Dorothy Beard, Chief of Dockets, Department of Transportation, telephone 202–366–9329.

SUPPLEMENTARY INFORMATION:

Request for Comments

The notice of proposed rulemaking (NPRM) on Marine Shipboard Electrical Cable Standards, published on February 8, 2000 (65 FR 6111), encouraged interested persons to participate in this rulemaking by submitting written data,

views, or arguments by May 8, 2000. On June 5, 2000, we published a notice of public meeting and reopened the comment period until July 7, 2000 (65 FR 35600). The public meeting was held on June 28, 2000. We are again reopening the comment period until September 11, 2000.

Persons submitting comments should include their names and addresses, identify this docket (USCG–1999–6096) and the specific section of the NPRM to which each comment applies, and give the reason for each comment. Please submit one copy of each comment and attachment in an unbound format, no larger than 8½ by 11 inches, suitable for copying and electronic filing, to the DOT Docket Management Facility at the address under **ADDRESSES.** If you want acknowledgment of receipt of your comment, enclose a stamped, self-addressed postcard or envelope.

The Coast Guard will consider all comments received during the comment period. It may change this NPRM in view of them.

Dated: July 19, 2000.

Joseph J. Angelo,

Director of Standards, Marine Safety and Environmental Standards.

[FR Doc. 00–18940 Filed 7–26–00; 8:45 am]

BILLING CODE 4910–15–U

Notices

Federal Register

Vol. 65, No. 145

Thursday, July 27, 2000

This section of the FEDERAL REGISTER contains documents other than rules or proposed rules that are applicable to the public. Notices of hearings and investigations, committee meetings, agency decisions and rulings, delegations of authority, filing of petitions and applications and agency statements of organization and functions are examples of documents appearing in this section.

DEPARTMENT OF AGRICULTURE

Food Safety and Inspection Service

[Docket No. 00–030N]

Codex Alimentarius Commission: Twentieth Session of the Codex Committee on Processed Fruits and Vegetables

AGENCY: Office of the Under Secretary for Food Safety, USDA.

ACTION: Notice of public meeting and request for comments.

SUMMARY: The Office of the Under Secretary for Food Safety and the Agricultural Marketing Service (AMS), U.S. Department of Agriculture (USDA), are sponsoring a public meeting on August 10, 2000. The purpose of the meeting is to provide information and receive public comments on agenda items that will be discussed at the Twentieth Session of the Codex Committee on Processed Fruits and Vegetables (CCPFV), which will be held in Washington, DC on September 11–15, 2000. The Under Secretary and AMS recognize the importance of providing interested parties with information about the Processed Fruits and Vegetables Committee of the Codex Alimentarius Commission (Codex) and to address the items on the Agenda for the Twentieth Session of the CCPFV.

DATES: The public meeting is scheduled for Thursday, August 10, 2000, from 9 a.m. to 4:30 p.m.

ADDRESSES: The public meeting will be held in Room 0161 South Building, U.S. Department of Agriculture, 1400 Independence Ave. SW, Washington, DC. To receive copies of the documents referenced in this notice contact the FSIS Docket Room, U.S. Department of Agriculture, Food Safety and Inspection Service, Room 102, Cotton Annex, 300 12th Street, SW, Washington, DC 20250–3700. The documents will also be accessible via the World Wide Web at the following address: *http://www.fao.org/waicent/faoinfo/economic/esn/codex/ccpfv20/pf00—01e.htm.* Submit one original and two copies of written comments to the FSIS Docket Room (address above), Docket #00–030N and the document number. All comments received in response to this notice will be considered part of the public record and will be available for viewing in the FSIS Docket Room between 8:30 a.m. and 4:30 p.m., Monday through Friday.

FOR FURTHER INFORMATION CONTACT: Patrick J. Clerkin, Associate U.S. Manager for Codex, U.S. Codex Office, Food Safety and Inspection Service, Room 4861, South Building, 1400 Independence Avenue SW., Washington, DC 20250, Telephone (202) 205–7760, FAX (202) 720–3157. Persons requiring a sign language interpreter or other special accommodations should notify Mr. Clerkin at the above number.

SUPPLEMENTARY INFORMATION:

Background

Codex was established in 1962 by two United Nations organizations, the Food and Agriculture Organization (FAO) and the World Health Organization (WHO). Codex is the major international organization for protecting the health and economic interests of consumers and encouraging fair international trade in food. Through adoption of food standards, codes of practice, and other guidelines developed by its committees, and by promoting their adoption and implementation by governments, Codex seeks to ensure that the world's food supply is sound, wholesome, free from adulteration, and correctly labeled.

The Codex Committee on Processed Fruits and Vegetables reviews world-wide standards for various processed fruits and vegetables, including certain dried products and certain canned products. This committee does not cover standards for fruit and vegetable juices. Codex has also allocated to this Committee the work of revision of standards for quick frozen fruits and vegetables. The Committee is chaired by the United States of America.

Issues To Be Discussed at the Public Meeting

Agenda items will be described and discussed at the August 10, 2000, public meeting. Attendees will have the opportunity to pose questions and offer comments.

The provisional agenda items to be discussed during the public meeting are:

1. Adoption of the Agenda,
2. Matters Referred by the Codex Alimentarius Commission and other Codex Committees,
3. Establishment of a Priority List for the Revision and Standardization of Processed Fruits and Vegetables,
4. Draft Revised Standards for Canned Fruits at Step 7 Canned Applesauce and Canned Pears,
5. Proposed Draft Guidelines for Packing Media for Canned Vegetables,
6. Proposed Draft Guidelines for Packing Media for Canned Fruits,
7. Methods of Analysis for Processed Fruits and Vegetables,
8. Consideration of Other Draft and Proposed Draft Standards for Processed Fruits and Vegetables Based on Priority List Discussions,
9. Other Business and Future Work.

Each issue listed will be fully described in documents distributed, or to be distributed, by United States' Secretariat to the Meeting. Members of the public may access or request copies of these documents (see ADDRESSES).

Additional Public Notification

Public awareness of all segments of rulemaking and policy development is important. Consequently, in an effort to better ensure that minorities, women, and persons with disabilities are aware of this notice, FSIS will announce it and provide copies of this **Federal Register** publication in the FSIS Constituent Update. FSIS provides a weekly FSIS Constituent Update, which is communicated via fax to over 300 organizations and individuals. In addition, the update is available on-line through the FSIS web page located at http://www.fsis.usda.gov. The update is used to provide information regarding FSIS policies, procedures, regulations, **Federal Register** notices, FSIS public meetings, recalls, and any other types of information that could affect or would be of interest to our constituents/stakeholders. The constituent fax list consists of industry, trade, and farm groups, consumer interest groups, allied health professionals, scientific professionals, and other individuals that have requested to be included. Through these various channels, FSIS is able to provide information to a much broader, more diverse audience. For more

information and to be added to the constituent fax list, fax your request to the Congressional and Public Affairs Office, at (202) 720–5704.

Done at Washington, DC on July 21, 2000.

F. Edward Scarbrough,

U.S. Manager for Codex Alimentarius.

[FR Doc. 00–18988 Filed 7–26–00; 8:45 am]

BILLING CODE 3410–DM–P

DEPARTMENT OF AGRICULTURE

Natural Resources Conservation Service

Forest Service

Notice of Meetings

AGENCY: Natural Resources Conservation Service (NRCS) and Forest Service.

ACTION: Notice of meeting.

SUMMARY: Maintaining Agriculture and Forestry in Rapidly Growing Areas Listening Forums hosted by members of the USDA Policy Advisory Committee on Farmland Protection. The USDA Policy Advisory Committee on Farm and Forest Lands Protection is holding listening forums this summer to solicit policy feedback and anecdotal information on what works and what does not work from a community 's perspective in working with Federal tools designed to maintain land as farmland and forest land. The input received from these forums will be synthesized into a report that USDA will issue on this subject later this year.

Specifically, the forums will ask for public comment on the following questions:

1. What are the economic, environmental, and social benefits of farms and forested lands for communities, especially those in rapidly growing regions?

2. What are the challenges that communities and individuals face in trying to maintain farms and forested lands, especially in rapidly growing areas?

3. What sorts of opportunities exist to capitalize on market opportunities (e.g. direct marketing and agri-tourism) to encourage maintenance of farmland and forestland?

4. What role could the Federal Government play to better support farmers and forest operators in taking advantage of these opportunities?

DATES: The first two forums were held July 13, 2000, in Sycamore, Illinois and July 21, 2000 in Davis, California. The third forum will be July 31, 2000, in Seattle, Washington at Yale Street Landing, 1001 Fairview Avenue North, from 9 a.m. to 12 p.m. The fourth forum will be August 7, 2000, at the Crown Plaza Atlanta Airport Hotel, 1325 Virginia Avenue, Atlanta, Georgia form 9 a.m. to 12 p.m. The last forum will be held in Morristown, New Jersey, on August 9, 2000, from 9 a.m. to 12 p.m. It will be held at 53 East Hanover Avenue, at the Frelinghuysen Arboretum Auditorium. Three informational gathering sessions are being considered.

SUPPLEMENTARY INFORMATION: Notice of these forums is given under the Federal Advisory Committee Act, 5 U.S.C. App. 2. Additional information about the USDA Policy Advisory Committee, including any revised agendas for future forums that may appear after this **Federal Register** Notice is published, may be found on the World Wide Web at http://www.usda.gov.

Draft Agenda for the Forums

A. Opening remarks.

B. Panel presentations.

C. Public participation: oral statements, questions and answer period.

D. Closing remarks.

Procedural

The forums are open to the general public. Members of the general public will have an opportunity to present their ideas and opinions during each forum. Persons wishing to make oral statements should pre-register by contacting Ms. Mary Lou Flores at (202) 720–4525. Those who wish to submit written statements can do so by submitting 25 copies of their statements two days prior to the forum. Please send them to Ms. Stacie Kornegay, Natural Resources Conservation Service, P.O. Box 2890, Washington, D.C. 20013, Room 6013–S. The written form of the oral statements must not exceed five pages in 12-point pitch. At each forum, reasonable provisions will be made for oral presentations of no more than 3 minutes each in duration.

FOR FURTHER INFORMATION CONTACT: Requests for special accommodations because of disability, questions or comments should be directed to Rosann Durrah, Designated Federal Official, at (202) 720–4072; fax (202) 690–0639, email *rosann.durrah@usda.gov.*

Signed at Washington, D.C. on July 21, 2000.

Anne Keys,

Deputy Under Secretary, Natural Resources and Environment, USDA.

[FR Doc. 00–18948 Filed 7–26–00; 8:45 am]

BILLING CODE 3410–16–P

COMMISSION ON CIVIL RIGHTS

Agenda and Notice of Public Meeting of the Delaware Advisory Committee

Notice is hereby given, pursuant to the provisions of the rules and regulations of the U.S. Commission on Civil Rights, that a meeting of the Delaware Advisory Committee to the Commission will convene at 2:00 p.m. and adjourn at 6:00 p.m. on August 25, 2000, at the University of Delaware, Black Studies Department, 420 Ewing Hall, Conference Room 416, Newark, Delaware 19716. The purpose of the meeting is to: (1) review the current project, ''Citizens Reference Guide to Civil Rights in Delaware'', (2) discuss civil rights developments, and (3) plan new projects.

Persons desiring additional information, or planning a presentation to the Committee, should contact Committee Chairperson James Newton, 302–831–8683, or Edward Darden, Civil Rights Analyst of the Eastern Regional Office, 202–376–7533 (TDD 202–376–8116). Hearing-impaired persons who will attend the meeting and require the services of a sign language interpreter should contact the Regional Office at least ten (10) working days before the scheduled date of the meeting.

The meeting will be conducted pursuant to the provisions of the rules and regulations of the Commission.

Dated at Washington, DC, July 21, 2000.

Edward A. Hailes, Jr.,

Acting General Counsel.

[FR Doc. 00–18984 Filed 7–26–00; 8:45 am]

BILLING CODE 6335–01–P

DEPARTMENT OF COMMERCE

National Oceanic and Atmospheric Administration

[Docket No. 000630200–0200–01; I.D. 060800F]

RIN 0648–XA55

New Bedford Harbor Trustee Council

AGENCY: National Marine Fisheries Service (NMFS), National Oceanic and Atmospheric Administration (NOAA), Commerce.

ACTION: Notice of proposed restoration ideas for implementation in New Bedford Harbor; request for comments.

SUMMARY: On behalf of the New Bedford Harbor Trustee Council (Council), NMFS, serving as the Administrative Trustee, announces that the Council is proposing 17 restoration ideas for possible implementation through

funding from the AVX Natural Resource Damages Trust Account (Trust Account). Thirty-five natural resource restoration ideas were submitted for consideration by the Council. The Council now seeks comment on its proposed funding of the 17 ideas including proposed funding levels for each of those ideas. The Council had requested ideas, and proposed funding levels for those ideas, to restore natural resources that were injured by the release of hazardous substances and materials, including polychlorinated biphenyls (PCBs), in the New Bedford Harbor Environment (Harbor Environment) and in the Federal Register published on August 16, 1999).

DATES: The Council will accept comments on the proposed restoration projects through August 28, 2000.

ADDRESSES: The Council will accept written comments at the following locations: New Bedford Harbor Trustee Council, c/o National Marine Fisheries Service, 1 Blackburn Drive, Gloucester, MA 01930, Attn.: Jack Terrill, or New Bedford Harbor Trustee Council, 37 N. Second Street, New Bedford, MA 02740. Comments also may be sent via facsimile (fax) to 978–281–9301. Comments cannot be accepted if submitted via email or Internet.

FOR FURTHER INFORMATION CONTACT: Jack Terrill, Coordinator, 978–281–9136, fax 978–281–9301, or e-mail Jack.Terrill@NOAA.GOV.

SUPPLEMENTARY INFORMATION:

I. Background

New Bedford Harbor is located in Southeastern Massachusetts at the mouth of the Acushnet River on Buzzards Bay. The Harbor and River are contaminated with high levels of hazardous substances and materials, including PCBs, and as a consequence are on the U.S. Environmental Protection Agency's (EPA) Superfund National Priorities List. This site is also listed by the Massachusetts Department of Environmental Protection as a priority Tier 1 disposal site.

The Comprehensive Environmental Response, Compensation, and Liability Act (CERCLA or ''Superfund,'' 42 U.S.C. 9601 *et seq.*) designates as possible natural resource trustees Federal, state, or tribal authorities who represent the public interest in natural resources. The trustees are responsible for recovering funds through litigation or settlement for damages for natural resource injuries. CERCLA requires that any recovered monies be used to ''restore, replace, or acquire the equivalent of'' the natural resources that have been injured by a release of a hazardous substance.

For the New Bedford Harbor Superfund Site, there are three natural resource trustees on the Council representing the public interest in the affected natural resources. They are the Department of Commerce (DOC), the Department of the Interior, and the Commonwealth of Massachusetts. The Secretary of Commerce has delegated DOC trustee responsibility to NOAA; within NOAA, NMFS has responsibility for natural resource restoration. The Secretary of the Interior has delegated trustee responsibility to the U.S. Fish and Wildlife Service. The Governor of Massachusetts has delegated trustee responsibility to the Secretary of Environmental Affairs.

The Council issued an initial ''Request for Restoration Ideas'' in October 1995 (60 FR 52164, October 5, 1995)(Round I). Fifty-six ideas were received from the local communities, members of the public, academia and state and federal agencies. The ideas were the basis for the alternatives listed in the Council's ''Restoration Plan for the New Bedford Harbor Environment'' (Restoration Plan) that was developed to guide the Council's restoration efforts. An environmental impact statement was prepared in conjunction with the Restoration Plan to fulfill requirements of the National Environmental Policy Act. A record of decision was issued on September 22, 1998, for both the Restoration Plan and the environmental impact statement. The record of decision provided for implementation of 11 preferred restoration projects through funding provided by the Trust Account.

A second request for proposed restoration ideas was issued in August 1999 (64 FR 44505, August 16, 1999) (Round II). Thirty-five restoration ideas were submitted to the Council with total requested funding of approximately $35.0 million from the Trust Account. The Council held a meeting on October 26, 1999, to provide an opportunity for oral presentations of the submitted ideas. The Council also solicited public comments on the ideas and held a hearing on November 23, 1999, to give the public further opportunity to comment on the ideas. The project ideas were reviewed by the Council's legal advisors who provided comments regarding whether or not particular ideas satisfied the legal criteria for funding. In addition the ideas were evaluated by technical advisors who developed recommendations with respect to the technical feasibility and restoration benefits of each of the ideas.

The Council carefully considered all public comment received and the comments from its technical and legal advisors and staff. The Council discussed each idea, and following this review process, the Council identified preferred project ideas for potential funding.

The Council is now seeking public review of the preferred project ideas and the proposed level of funding for each project.

At the conclusion of the comment period, the Council will consider the comments from the public and its advisors before making any final decisions as to the projects eligible for potential funding through the Trust Account.

Upon the Council's final decisions, certain projects may require a competitive solicitation in order for the Council to provide funding. If necessary, the solicitation will be a formal request following the appropriate contract or grant procedures. Construction or implementation of the projects ultimately selected could be awarded to private entities, commercial firms, educational institutions or local, state or Federal agencies. All projects will ultimately be funded through contract or grant procedures that will provide conditions to ensure that the funds are expended prudently and as proposed.

Prior to final approval for funding, all selected projects require environmental review under applicable law and the submission of detailed scopes of work for Council review and approval. In addition, implementation of the projects may be conditioned or delayed, and the funds therefore held in reserve, until more information becomes available or specific conditions are met. Funds held in reserve will continue to be held in the interest bearing Trust Account, administered by the Court Registry Investment System of the United States District Courts.

II. The Preferred Project Ideas Recommended by the Trustee Council

Following is a description of the preferred project ideas proposed by the Council for potential implementation and funding. The Trustee Council has also make available an environmental assessment which will provide further information on the preferred project ideas and a discussion on those ideas which are not considered preferred projects, including a brief discussion of some of the reasons why the project is not preferred. This information will be made available at the Council offices (see **ADDRESSES**):

1. Acushnet River Valley Conservation Project (Council suggested amount: $964,000)

This idea involves the purchase of either a fee interest in, or conservation restriction for, approximately 245 acres of land along the Acushnet River. The land is characterized by 1.5 miles (2.4 kilometers) of non-tidal riverfront containing hardwood and pine forests, open farm land, red maple and shrub swamps and freshwater meadows. Accordingly, this project acquires and protects against development, the equivalent of river lands lost or injured due to contamination along the Acushnet River estuary. In addition, the acquisition and/or conservation of this land will help to restore downstream natural resources which were injured through PCB contamination. Among the primary benefits resulting from implementation of this idea would be protection of water quality downstream and the protection of passive recreation lands and/or fish and wildlife habitats. These tracts of land appear to have high habitat value and would greatly contribute to protection of the Acushnet River watershed. The cost of the land purchase or imposition of a conservation restriction at $3,900/acre appears to provide good environmental benefits for the cost. While this site is not contiguous to the area of contamination, it is expected to provide much needed protection to the injured natural resources, particularly anadromous fish injured by the contamination.

All Council-funded land purchases require a habitat value analysis, a fair market appraisal, title exam, an environmental site assessment, property boundary surveys and a conservation restriction to be held by a grantee acceptable to the Trustee Council before the project can be implemented (collectively referred to hereinafter as the ''standard pre-acquisition tasks'').

2. Buzzards BayKeeper (Council suggested amount: $150,000)

The BayKeeper would be an on-the-water initiative to primarily monitor whether trustee funded projects are being properly implemented and to identify any activities that may be adversely affecting successful implementation. Accordingly, the BayKeeper will be assisting the Council's efforts to restore natural resources by monitoring the Trust Account funded projects and by providing information to assist in the effective implementation of such current and future projects. The BayKeeper is also envisioned as supporting education projects and wetland restoration activities associated with the harbor cleanup and restoration. The Council currently believes that the BayKeeper can provide additional monitoring and assistance to both existing and future Council funded projects such as eelgrass, saltmarsh and tern restoration projects as well as providing overall monitoring of activities that may adversely affect restoration projects. The funding request would support these BayKeeper activities for a 5-year period.

3. Community Rowing Boathouse (Council suggested amount: $25,000 for a study on lost recreational use, $250,000 for new boat(s) and a boathouse if the results of the study indicate a sufficient loss of access to the Harbor through recreational boating due to PCB related injury to natural resources to justify the expense of the proposed idea.)

This idea involves the purchase or construction of additional boats and the planning and construction of a boathouse to be used for an existing whaleboat rowing program for youth and adults. The boathouse facility would include space for storage, repair, maintenance, and construction of boats. If the project were funded, participation in the boating programs would be offered free of charge to all New Bedford schoolchildren.

Any funding for this idea is contingent upon obtaining the results of the study and analysis, described here, that demonstrate a loss of access to the Harbor for recreational boating due to PCB-related injury to natural resources to justify the expense of the proposal. Accordingly, if the study demonstrates a loss of access to the Harbor to recreational boating due to PCB-related injury to natural resources, the overall goal of this project is to compensate for that lost access and natural resource service by providing the equivalent of such lost access and natural resource service, by providing people with a means of direct access to the Harbor through an on-the-water activity within the Harbor. The provision of additional boats or construction of new boat(s) and/or a boathouse would address this goal by allowing an expansion of an existing harbor-oriented boating program with an emphasis on youth rowing. In addition the boathouse could possibly be used for similar programs offered by other groups. The Trustees will consider this project, and/or alternative projects to enhance boating uses, subject to further legal review.

Several of the restoration ideas received in both Round I and Round II have involved projects to restore lost recreational uses. It has become apparent that the Council requires more information on certain injuries to recreational uses of natural resources resulting from PCB contamination, before the Council can evaluate the merits of additional projects which address specific impacts to recreational use of natural resources in the Acushnet River and New Bedford Harbor. The Harbor has been closed to fishing since 1979 and swimming since 1982. The 1986 damage assessment considered lost use values associated with impacts to the commercial lobster fishery, recreational fishing, beach use and coastal property value decreases associated with public awareness of the PCB contamination. The damage assessment did not study any impacts to other recreational uses, including boating. It is not known whether these other uses were considered at the time that the prior studies were performed.

The Council recommends commissioning a study to evaluate whether there has been other lost recreational use(s) of the New Bedford Harbor Environment associated with PCB-related injuries to natural resources. The information resulting from the study would then be available to determine which access and recreation projects are legally fundable and, possibly, the level of funding the Trustees should consider relative to other recreational projects and restoration priorities.

4. Marsh Island Salt Marsh Restoration (Council suggested amount: $750,000)

The original idea (Harbor Open Space/Public Access Study) contained many aspects including the study of Marsh Island for passive recreation and environmental aspects. In reviewing this idea, the technical advisors favored the restoration of the salt marsh on Marsh Island. Of the eight sites proposed for study, the Marsh Island site appears to show the greatest potential for restoration and public access. This site could have both a salt marsh through the restoration of former tidal and/or non-tidal wetlands and re-establishment of the upland maritime plant community, and a passive recreation park. There is a bedrock outcrop at the shoreline which would make an excellent focal point for the park with the restored salt marsh and tidal gut immediately south of this outcrop.

As discussed here, this project represents the restoration of a saltmarsh, a natural resource which was injured by PCB contamination.

Some salt marshes within the New Bedford Harbor Environment are

contaminated by PCBs. Species are exposed to PCBs each time they use the marsh resulting in harmful health effects. Restoration of marsh habitat that is in the vicinity of the Harbor but is not impacted by contaminants will help support resources dependent on marshes that have been injured within the Harbor Environment. Habitat for resident fish species could be restored, as well as intertidal habitat for avifauna and other marine biota. Public access via foot trails would allow direct access to the harbor.

More information is needed on the ownership of the property. In addition the standard pre-acquisition tasks would need to be satisfied before any purchase could occur. (See preliminary decision #1.)

New Bedford Aquarium

Several project ideas were submitted in association with the proposed New Bedford Aquarium. The Council reviewed the various ideas and has identified the following (#5—8) as among the preferred projects:

5. Artificial reef (Council suggested amount: up to $500,000)

The idea would be to construct a reef three to four times the size of an existing artificial reef off Salter's Point, Dartmouth, MA, constructed in 1998 using reef balls. Because bottom habitat has been adversely impacted by the release of PCBs which settled into the bottom sediments, this project should help to restore those natural resources injured by PCB sediments in the Harbor bottom. Living resources using or coming in contact with the bottom risk contamination from the PCBs. Properly constructed and appropriately located artificial reefs can: (1) enhance or replace injured fish habitat; (2) facilitate access to areas with fish species and utilization by recreational and commercial fishermen; and (3) increase total fish biomass within a given area.

The Council would provide funding for a preliminary identification of appropriate locations, and the materials and/or structures to be utilized at such locations. If a suitable location is found, a reef would be constructed with Trust funds. Funding would also include a monitoring component to determine if the goals of the project are being achieved, to identify any necessary modifications, and to ensure that intended benefits are being realized by the injured natural resources.

6. Educational exhibit on PCB impacts to natural resources and examples of how to change everyday behavior to have a positive impact on the Harbor Environment (Council suggested amount: $150,000)

The exhibit would contain essentially two components or goals. The first purpose of the exhibit would be to explain what PCBs are, what they were used for in industry, their disposal into the Harbor, and then examine the effects of PCB contamination on the six major taxonomic groups of organisms (fish, crustaceans, mollusks, plankton, annelids, birds) located in the New Bedford Harbor Environment. The exhibit would be expected to educate the public on the harmful effects of the PCB discharges and efforts being made to clean up the harbor and restore its natural resources. With this education should come a greater appreciation of the Harbor and a concern that further pollution should be prevented.

The second, and perhaps more significant, purpose of the exhibit is to educate people to change their routine or everyday behavior to have a positive impact on the New Bedford Harbor Environment and its natural resources that have been adversely affected by past PCB disposals and releases into the Harbor Environment. Examples might include the kinds of materials which should not be poured down the household drain, or discarded from a boat, or otherwise disposed of into the Harbor Environment. By emphasizing simple preventative measures to a large audience, such preventive measures may ultimately produce a significant cumulative benefit. Because the Aquarium exhibit should reach a large audience, including a very significant portion of the greater New Bedford area population, it is believed that this educational exhibit should have a direct and positive impact on natural resource restoration in the harbor.

7. Marine fish stock enhancement (Council suggested amount: up to $1,950,000)

The New Bedford Aquarium proposal would construct a fish hatchery co-located at the Aquarium site. This facility will raise species that have been injured by PCB contamination for two possible purposes: First, stocking of hatchery raised fish could be one of the means of replacing some fish species, natural resources that were injured by PCBs (winter flounder, scup tautog), if a methodology can be found which is protective of the wild stocks and assists in their survival. Second, hatchery raised fish may be found to provide other ecosystem services, such as supporting the food chain in an environmentally protective way. In other words, because certain fish species were injured by PCB contamination, supplying hatchery raised fish may assist restoration efforts by reducing PCB contamination in the food chain. In order to determine if such potential restoration efforts will benefit the injured marine fish species, the Trustees need to obtain information on the feasibility and efficacy of using a hatchery facility to provide for either or both of these purposes.

While the Trustees cannot ascertain, at this point, the scope and scale of the facility that will be needed to answer these questions or to supply these needs, or the breadth and duration of the studies that will be necessary, the Trustees have earmarked up to $1,950,000 with the hope of accomplishing these goals: (A)design and implementation of a feasibility study to evaluate the potential for a hatchery facility to aid the Trustees' in restoring, replacing or acquiring the equivalent of injured fish species by satisfying either or both of the objectives described here; (B)if justified by the feasibility study, design and construct an appropriate portion of the Aquarium to house a hatchery facility to facilitate accomplishment of either or both of the objectives described above. The funding would support construction and operations of the facility for over 5 years, following which the Aquarium would be expected to continue operating the facility. It would also provide a facility which promotes a collaborative approach between Federal, state, academic and private interests that would further research capabilities on aquaculture. In addition, this facility would serve as a working exhibit of the Aquarium and would provide training, research and education capabilities which should promote aquaculture within the region. The Trustees believe that this funding amount is appropriate for a project that can provide this level of information and services for future use in restoring injured natural resources in the harbor.

The Trustees will first evaluate the outcome of the feasibility study against the current needs for restoration. Assuming that the feasibility study supports this hatchery approach, then the Trustees will need to work with the Aquarium as the design of the facility moves forward. Planning for hatchery facilities must provide for the restoration needs, including a determination of what can feasibly be built into the Aquarium to satisfy either of the dual purposes, and whether or

not the studies and construction could be completed within the timeframe that would provide information to the Trustees and restoration in a timely manner.

The Aquarium proposal specified that fish produced in such a facility may also be used for human consumption. Council funding may not be used for this purpose and the proposed funding level reflects this restriction.

8. Saltmarsh creation (Council suggested amount: up to $750,000)

This idea proposes to construct a saltmarsh on the Aquarium site to be colonized with both low and high marsh plant species and animals. The saltmarsh would: (1) replace injured saltmarsh habitat, a natural resource; (2) serve as a living exhibit of the aquarium and be part of a public park; (3) remove nitrogen from the seawater effluent from the Aquarium's tanks and Harbor waters which may be used to supplement tank flows; and (4) produce marsh plants for use at the Aquarium site and throughout the Inner Harbor. Funding would be for the design, construction and planting. A boardwalk and signage would be erected to allow significant access with minimal impact to the marsh while explaining the functions of a saltmarsh to a large audience. The saltmarsh and exhibit would educate the public on the importance of preserving, restoring or creating salt marshes and, hopefully, influence a change in behavior to protect salt marshes from future development and its resultant destruction of this essential habitat.

The Council intends to reserve funding for projects 5 through 8 until after a specific funding goal for the total Aquarium has been met. The Council requests comment on this concept and suggestions regarding the amount to be raised, or other distinguishing events before release of funds should occur. Note: for certain projects it may be appropriate to release funds at an earlier time than for others. The Council is also seeking comment on its decision to have Council-funded projects available for viewing without an admission fee. Aquarium projects 6, 7, and possibly 8, would be part of the facility for which an admission fee would be charged and the Council requests suggestions on how access can be provided to these projects at no cost to the visitor.

9. Nonquitt Salt Marsh Restoration (Council suggested amount: $150,000)

This idea was originally suggested in Round I. As discussed here, this project represents the restoration of a saltmarsh, a natural resource which was injured by PCB contamination. The idea involves installing a new 100–foot (30.5–meter) culvert, remove a tidal slide gate and replace a headwall to improve tidal flushing of the 60–acre Nonquitt Marsh, Dartmouth. Some salt marshes within the New Bedford Harbor Environment are contaminated by PCBs. Species are exposed to PCBs each time they use the marsh resulting in harmful health effects. Restoration of marsh habitat that is in the vicinity of the Harbor but is not impacted by contaminants will help support resources dependent on marshes that have been injured within the Harbor Environment.

Inadequate flushing has resulted in elevated salt levels in the Nonquitt marsh. Occasionally, storms will block the culvert pipe with sediment and vegetation. This problem was compounded when a large storm in the late 1970's caused a complete blockage of the pipe which resulted in the marsh vegetation dying off due to long periods of flooding. The distressed vegetation has yet to recover and the peat within the marsh is decomposing and eroding. By improving tidal flushing of this marsh, normal salinity, vegetation and productivity of the marsh will be restored. Included in the project idea was the construction of a marsh observation platform to facilitate public access to the site.

During Round I the Council decided to postpone the final decision regarding funding of this project pending further evaluation of comments received regarding: the costs of the project and the potential for costsharing; whether other design and location alternatives are under consideration; the possible impacts to the marsh from fecal contamination and freshwater inputs; and public access to the marsh. The Council has evaluated those comments and the responses received from the applicant and determined that the project meets the criteria for funding and will provide substantial increased benefits to injured natural resources within the New Bedford Harbor Environment.

10. Popes Beach Land Purchase (North) (Council suggested amount: $55,000)

This idea proposes to purchase and place a conservation restriction on six parcels of land totaling 2.6 acres on the northwest portion of Sconticut Neck, Fairhaven. This property consists of dunes, beach, sand flats and salt marsh habitats. Just offshore are recreational shellfish beds to which the public would also be provided access. The purchase and conservation easement should contribute indirectly to the protection and restoration of that shellfish resource, a natural resource which was injured by PCB contamination. This property would add to the growing inventory of undeveloped coastal wetlands along Sconticut Neck and is contiguous to undeveloped lands in upper Priests Cove. The shoreline, tidal flats, marshes and shellfish beds within the Harbor were contaminated by the release of PCBs. The purchase of this property will acquire equivalent property to that which was impacted and will protect the habitat from future development providing a benefit to natural resources. The technical advisors believe it provides good environmental benefits at reasonable costs. The standard pre-acquisition tasks would need to be satisfied before the purchase could occur. (See preliminary decision number 1.)

11. Popes Beach Land Purchase (South) (Council suggested amount: $145,000)

This idea proposes to purchase and place a conservation restriction on approximately 3.5 acres of land on the northwest portion of Sconticut Neck, Fairhaven. The shoreline edge is characterized by a dune-like plant community. The intertidal sandflat and nearby subtidal waters provide feeding and cover habitat for estuarine finfish species. The remaining property is characterized by shrub, sapling and common reed-dominated plant community cover. The purchase and placement of a conservation restriction on this property will acquire equivalent property to that which was impacted by PCB contamination within the Harbor and will protect the habitat from future development providing a benefit to natural resources. The goal is to preserve this estuarine habitat from future development. This land is not contiguous with the other land proposed for purchase but is in the same general area. It is believed to have good habitat value which a habitat value analysis could confirm. The standard pre-acquisition tasks would need to be satisfied before the purchase could occur. (See preliminary decision #1.)

12. Regional Shellfish Grow Out Up-Well System (Council suggested amount: $500,000)

PCBs discharged into the New Bedford Harbor Environment have resulted in elevated levels of PCBs in a variety of fish and shellfish species requiring the enactment of fishing closures.

The goal of this project is to restore shellfish injured by PCB contamination through the construction of a shellfish grow out up-well system. The system is a tank-based system using recirculated

sea water, and if selected, it would involve locating an appropriate site for the facility, and the design, construction and startup of the facility. Once constructed, the facility would be used to raise shellfish to a size that, after placement in the wild, would have a high probability of surviving to spawning and harvest size. This system would assist the Council's shellfish restoration efforts already receiving restoration funding. The system would allow shellfish seed to be purchased at a small size and then grown under controlled conditions to a size that would survive predation. Smaller seed is less expensive than larger seed, so this idea would allow more seed to be purchased. More areas will be seeded and there will be quicker returns for the effort. Although not included in the proposal, based on the technical advisors' recommendation, the Trustees will require this project to include a component to scientifically document the extent of success of this stocking effort.

13. Restoration and Management of Tern Populations (Council suggested amount: $1,232,000)

Roseate and common terns were injured while feeding on PCB contaminated fish in the New Bedford Harbor Environment. The project goal is to rebuild and restore the population of roseate terns(a federally listed endangered species) and common terns through management or enhancement of nesting locations. The management aspect of this project involves moving other species, such as gulls, off the nesting areas and the daily monitoring of the terns that locate at the three islands.

This idea would extend the work being conducted under restoration funding from Round I for an additional period of 6 years. Round I provided funding ($266,400) to implement biological management and monitoring of tern colonies at Bird Island, Marion, Massachusetts, and Ram Island, Mattapoisett, Massachusetts to restore population of common terns and roseate terns. At a third island, Penikese Island, Gosnold, Massachusetts, the project focused on reclaiming the island as a nesting site by managing gulls. Preliminary engineering work to stabilize Bird island and toxicological analyses of tern eggs were also funded.

14. Riverside Auto Wrecking Land Acquisition (Council suggested amount: $675,000)

This idea proposes to purchase and place conservation restrictions on four lots in Acushnet totaling approximately 14.3 acres of land in the upper harbor portion of the New Bedford Harbor Superfund Site. The purchase, and conservation restriction would preserve the land from redevelopment and provide protection to the wetlands or wetland fringe adjacent to the properties. The wetland fringe is one of the areas determined to be contaminated by PCBs and will be remediated by removing the contaminated portion followed by replanting. Accordingly this project will provide an acquisition of equivalent natural resources to those which were injured or lost due to PCB contamination.

One of the properties is the home of an auto wrecking yard and is located across the river from the Aerovox facility, one of the past sources of contamination of the harbor. The applicant hopes to use the parcels for scientific study, environmental education and habitat restoration. The purchase of these parcels (and cleanup through other funding sources) would enhance the function of the adjacent wetlands and the aesthetics of the upper harbor. The technical advisors recommended, and the Council agreed, that any funding provided be limited to purchase of, and placement of conservation restrictions on, the properties and identified restoration activities but not for the cleanup or staffing. The standard pre-acquisition tasks would need to be satisfied before the purchase could occur. (See preliminary decision number 1.)

15. Upper Harbor Confined Disposal Facility (CDF)Natural Resource Habitat Enhancements (Council suggested amount: $25,000)

This idea is to enhance the three CDFs north of Coggeshall Street being built to hold contaminated harbor sediments by incorporating plantings for habitat enhancement which could not otherwise be funded or implemented by EPA. The design of the CDFs would incorporate plantings conducive to use by birds and other wildlife for similar natural resource functions to those lost due to the contamination of the CDFs as a result of PCB contamination in the Harbor: such lost or injured natural resource functions include cover, foraging and/or feeding. The Council would like to first determine, through a study, the type of plantings that could be supported by these structures, including the sides of the structures. Such plantings would further benefit the injured natural resources present in the Harbor. If the plantings are determined to be likely to restore or replace PCB-injured natural resources in the area, the Council would consider a funding level necessary to support the plantings.

16. Upper Sconticut Neck Shellfish/ Sewer Installation (Council suggested amount:$150,000 for study, $550,000 in reserve)

This restoration idea seeks to eliminate a potential source of pollution which has closed shellfish beds and recreational areas in the Outer New Bedford Harbor off Sconticut Neck, Fairhaven. Shellfish beds in the Harbor were contaminated with PCBs resulting in fishery closures. This project would replace those beds by opening up beds closed by septic contamination. It is believed that at least one of the sources of pollution into this area is individual septic systems that release fecal contaminants which eventually migrate into the harbor. Although the Town of Fairhaven has made great efforts to identify individual sources and correct the problem, the contamination still continues. To further address this problem, the idea proposes to connect 450 Sconticut Neck residential dwellings to the municipal sewer system, which may reduce fecal contamination in the Outer Harbor. This idea, if feasible, will protect an existing shellfish bed from fecal bacterial contamination.

The Council is concerned that there may be several contaminant sources that are impacting these shellfish beds. Rather than commit a significant amount of funding to correct what may be only one source of contamination, the Council would like to undertake a study to determine the sources impacting these shellfish beds and the best way to correct the source of contamination. If the results conclusively determine that the Sconticut Neck septic systems are responsible, and the idea is feasible, the Council would then release additional funds to assist the design and engineering for this project.

17. Winsegansett Field Station—New Bedford Harbor Environmental Education and Coastal Resources Restoration Center (Council suggested amount: $360,000)

This idea contains many different components which the Council believes to be severable. The Council preliminarily supports the following aspects of the idea: habitat restoration and environmental education projects targeting specific human activities. In particular, the Council believes at this time that there are discrete habitat restoration projects on the property that should be identified and implemented, including: restoring salt marsh degraded

by insufficient flow (salt marshes were injured by PCBs); restoring water quality in Winsegansett Pond by investigating and correcting pollutant inputs (salt pond habitat assists natural resources injured by PCBs); and restoring living resources through eelgrass planting (eelgrass plantings assist in the restoration of natural resources injured by PCBs). These restoration activities would provide replacement for similar lost or injured natural resources in the Harbor Environment.

The Council also believes that there are opportunities to educate people about restoration of PCB injured natural resources in the New Bedford Harbor Environment through conducting activities at this site and encouraging additional restoration efforts. For example, there are eelgrass beds, saltmarsh and a salt pond located on the site. As those areas are restored, or enhanced, it may be appropriate to provide specific training programs to educate schoolchildren, the public, and municipal officials regarding the functions of these resources, and the appropriate methodologies to restore and monitor the resources in the New Bedford Harbor Environment.

The Council also evaluated the need for a full-time staff person to be funded from the New Bedford Harbor Trust Accounts. The Council chose instead only to recommend sufficient funds to allow contracting for the specific services needed. The Council also recommends some funding for the trail and public access improvements and protective/interpretative signage.

Classification

This notice does not contain a collection-of-information requirement subject to the Paperwork Reduction Act.

Authority: 42 U.S.C. 4321 *et seq.* and 9601 *et seq.*

Dated: July 21, 2000.

Andrew J. Kemmerer,

Director, Office of Habitat Conservation, National Marine Fisheries Service.

[FR Doc. 00–19028 Filed 7–26–00; 8:45 am]

BILLING CODE 3510–22–F

DEPARTMENT OF DEFENSE

Department of the Navy

Meeting of the Board of Advisors to the President, Naval War College

AGENCY: Department of the Navy, DOD.

ACTION: Notice.

SUMMARY: The Board of Advisors to the President, Naval War College, will meet to discuss educational, doctrinal, and research policies and programs at the Naval War College. This meeting will be open to the public.

DATES: The meeting will be held on August 15, 2000, from 8:30 a.m. to 4:30 p.m., and on August 16, 2000, from 8:30 a.m. to 11:45 a.m.

ADDRESSES: The meeting will be held in Conolly Hall, Naval War College, 686 Cushing Road, Newport, Rhode Island.

FOR FURTHER INFORMATION CONTACT: Mrs. Mary E. Estabrooks, Assistant to the Dean of Academics, Naval War College, 686 Cushing Road, Newport, RI 02841–1207, telephone (401) 841–3589.

SUPPLEMENTARY INFORMATION: This notice of meeting is provided per the Federal Advisory Committee Act (5 U.S.C. App. 2). The purpose of the Board of Advisors meeting is to elicit advice on educational, doctrinal, and research policies and programs. The agenda will consist of presentations and discussions on the curriculum, programs and plans of the College since the last meeting of the Board on 17 and 18 September 1998.

Dated: July 18, 2000.

J.L. Roth,

Lieutenant Commander, Judge Advocate General's Corps,, U.S. Navy, Federal Register Liaison Officer.

[FR Doc. 00–19021 Filed 7–26–00; 8:45 am]

BILLING CODE 3810–FF–P

DEPARTMENT OF DEFENSE

Department of the Navy

Notice of Intent To Grant Exclusive Patent License

AGENCY: Department of the Navy, DOD.

ACTION: Notice.

SUMMARY: In accordance with 37 CFR 404, announcement is made of the intent to exclusively license U.S. Navy patent number 5,520,331 entitled ''Liquid Atomizing Nozzle''.

The patent intended to be licensed has been assigned to the United States of America as represented by the Secretary of the Navy, Washington, DC.

DATES: Anyone wishing to object to the grant of this license must file written objections along with supporting evidence, not later than September 25, 2000.

ADDRESSES: Written objections are to be filed with the Business Development Office, NAWCAD, Lakehurst, New Jersey 08733, telephone (732) 323–2948, E-mail: kohlerhk@navair.navy.mil.

FOR FURTHER INFORMATION CONTACT: Hans Kohler, Business Development Office, NAWCAD, Lakehurst, New Jersey 08733, telephone(732) 323–2948, E-mail: kohlerhk@navair.navy.mil.

SUPPLEMENTARY INFORMATION: This patent covers a convergent/divergent gas nozzle, which atomizes a liquid provided through a delivery tube, providing an extremely fine mist having a high momentum. The nozzle is particularly well suited to fire extinguishment.

Under the authority of Section 11(a)(2) of the Federal Technology Transfer Act of 1986 (Public Law 99–502) and Section 207 of Title 35, United States Code, the Department of the Navy, as represented by the Naval Air Warfare Center, intends to exclusively license this invention to International Aero, Inc., a small business which is interested in manufacturing, using, and/or selling devices or processes involved in this invention.

Dated: July 18, 2000.

J.L. Roth,

Lieutenant Commander, Judge Advocate General's Corps, U.S. Navy, Federal Register Liaison Officer.

[FR Doc. 00–19019 Filed 7–26–00; 8:45 am]

BILLING CODE 3810–FF–P

DEPARTMENT OF DEFENSE

Department of the Navy

Notice of Intent To Grant Exclusive Patent License; Marine Desalination Systems, LLC

AGENCY: Department of the Navy, DOD.

ACTION: Notice.

SUMMARY: The Department of the Navy hereby gives notice of its intent to grant to Marine Desalination Systems, LLC., revocable, nonassignable, exclusive license in the United States, to practice the Government-owned invention described in U.S. Patent No. 5,873,262 entitled ''Desalination Through Methane Hydrate'' issued February 23, 1999.

DATES: Anyone wishing to object to the grant of this license must file written objections along with supporting evidence, if any, not later than September 25, 2000.

ADDRESSES: Written objections are to be filed with the Office of Naval Research, ONR 00CC, Ballston Tower One, 800 North Quincy Street, Arlington, Virginia 22217–5660.

FOR FURTHER INFORMATION CONTACT: Catherine M. Cotell, Ph.D., Head, Technology Transfer Office, NRL Code 1004, 4555 Overlook Avenue, SW, Washington, DC 20375–5320, telephone (202)767–7230.

(Authority: 35 U.S.C. 207, 37 CFR Part 404)

Dated: July 18, 2000.

J.L. Roth,

Lieutenant Commander, Judge Advocate General's Corps, U.S. Navy, Federal Register Liaison Officer.

[FR Doc. 00–19022 Filed 7–26–00; 8:45 am]

BILLING CODE 3810–FF–P

DEPARTMENT OF DEFENSE

Department of the Navy

Notice of Performance Review Board Membership

AGENCY: Department of the Navy, DOD.

ACTION: Notice.

SUMMARY: Pursuant to 5 U.S.C. 4314(c)(4), the Department of the Navy (DON) announces the appointment of members to the DON's numerous Senior Executive Service (SES) Performance Review Boards (PRBs). The purpose of the PRBs is to provide fair and impartial review of the annual SES performance appraisal prepared by the senior executive's immediate and second level supervisor; to make recommendations to appointing officials regarding acceptance or modification of the performance rating; and to make recommendations for monetary performance awards. Composition of the specific PRBs will be determined on an ad hoc basis from among individuals listed below:

ALTWEGG, D.M. MR.
AMERAULT, J.F. VADM
ANTOINE, C.S. MR.
BAILEY, W.C. MR.
BAUGH, D. E. RADM
BAUMAN, D. M. MR.
BECRAFT, C. H. HON.
BLICKSTEIN, I. N. MR.
BONWICH, S. M. MR.
BOYD, W. R. MR.
BOYER, R. R. MR.
BRANT, D. L. MR.
BROWN, P. F. MR.
BUCHANAN III, H. L. HON.
BUONACCORSI, P. P. MR.
CALI, R. T. MR.
CAMP, J. R. MR.
CARPENTER, A. W. MS.
CASSIDY JR, W. J. MR.
CATRAMBONE, G. P. MR.
CHURCH, A. T. RADM
CIESLAK, R. C. MR.
CIPRIANO, J. MR.
COCHRANE JR, E. R. MR.
COFFEY, T. DR.
COHEN, J. M. RADM
COHN, H. MR.
COLE, D. A. MR.
COMMONS, G. L. MS.
COOK, J. RADM.
CRABTREE, T. R. MR.
CUDDY, J. V. MR.
DANZIG, R. HON.
DAVIDSON, M. H. MR.
DAVIS, J. P. RADM
DEMARCO, R. DR.
DIXSON, H. L. MR.
DRAIM, R. P. MR.
DOHERTY, L. M. DR.
DOWD, T. K. MR.
DUDLEY, W. S. DR.
DURHAM, D. L. DR.
DWYER, D. RADM
EATON, W. D. MR.
EHRLER, S. M. MR.
ELLIS, W. G. MR.
ESSIG, T. W. MR.
EVANS, G. L. MS.
FEIGLEY, J. M. BGEN
FIELDS, A. MAJGEN
FILIPPI, D. M. MS.
FIOCCHI, T. C. MR.
FLORIP, T. F. MR.
FORD, F. B. MR.
FRANKEN, D. J. MR.
GERRY, D. F. MR.
GISCH, R. G. MR.
GLASCO, L. M. MR.
GOTTFRIED, J. M. MS.
GREENERT, J. W. RADM
GUARD, H. DR.
HAGEDORN, G. D. MR.
HAMMES, M. C. MR.
HAMMOND, R. E. MR.
HANNAH, B. W. DR.
HARTWIG, E. DR.
HAUENSTEIN, W. H. MR.
HAYNES, R. S. MR.
HEATH, K. S. MS.
HEFFERON, J. J. MR.
HENRY, M. G. MR.
HICKS, S. N. MR.
HIGGINS, K. L. DR.
HILDEBRANDT, A. H. MR.
HOLADAY, D. A. MR.
HOWELL, D. S. MS.
HOWIE, H. K. MR.
HUBBELL, P. C. MR.
HULTIN, J. M. HON.
JENKINS, H. G. RADM
JOHNSTON, B. RADM
JOHNSTON, K. J. DR.
JOSEPHSON, D. H. MS.
JUNKER, B. DR.
KASKIN, J. D. MR.
KEIL, J. G. MR.
KELLY, L. J. MR.
KELSEY, H. D. MR.
KEMP, C. RADM.
KLEINTOP, M. U. MS.
KLIMP, J. W. LTGEN
KNUDSEN, R. E. MR.
KOLB, R. C. DR.
KOTZEN, P. S. MS.
KRASIK, S. A. MS.
KREITZER, L. P. MR.
LACEY, M. E. MRS.
LAMADE, S. K. MS.
LAUX, T. E. MR.
LEACH, R. A. MR.
LEBOEUF, G. G. MR.
LEE, JR., P. M. MAJGEN
LEFANDE, R. DR.
LEGGIERI, S. R. MS.
LEKOUDIS, S. DR.
LEWIS, R. D. MS.
LIPPERT, K. W. RADM
LISIEWSKI, R. S. MR.
LOFTUS, J. V. MS.
LONG, L. MS.
LOOSE, M. K. RADM
LOPATA, F. A. MR.
LOWELL, P. M. MR.
LYNCH, J. G. MR.
MALTBIE JR, W. F. MR.
MARQUIS, S. L. DR.
MARTIN, R. J. MR.
MASCIARELLI, J. R. MR.
MASHBURN, JR., H. MAJGEN
MATTHEIS, W. G. MR.
MCELENY, J. F. MR.
MCKISSOCK, G. S. LTGEN
MCMANUS, C. J. MR.
MCNAIR, J. W.
MEADOWS, L. J. MS.
MELCHER, G. K. MR.
MERRITT, D. L. MR.
MERRITT, M. M. MR.
MESEROLE JR., M. MR.
MILAN, L. F. MR.
MILLER, K. E. MR.
MOHLER, M. K. MR.
MOLZAHN, W. R. MR.
MONTGOMERY JR., H. E. MR.
MOORE, S. B. MR.
MOREHOUSE, B. L. MS.
MOY, J. W. MR.
MUNSELL, E. L. MS.
MURPHY, P. M. MR.
MUTH, C. C. MS.
NEERMAN, D. W. MR.
NEHMAN, J. MR.
NEMFAKOS, C. P. MR.
NEWTON, L. A. MS.
NICKELL JR, J. R. MR.
O'DRISCOLL, M. J. MR.
OLSEN, M .A. MS.
PANEK, R. L. MR.
PAULK, R. D. MS.
PAYNE, T. MR.
PENNISI, R. A. MR.
PERSONS, B. J. MR.
PHELPS, F. A. MR.
PIRIE JR, R. B. HON.
POLZIN, J. E. MR.
PORTER, D. E. MR.
POWERS, B. F. MR.
PRESTON, S. W. HON.
PRINE, R. MR.
RAMBERG, S. DR.
RANDALL, S. R. MR.
RATH, B. DR.
RAU, D. CAPT
RHODES, J. E. LTGEN
ROARK JR., J. E. MR.
ROBUSTO, J. D. MR.
ROUTE, R. A. RADM
RIEGEL, K .W. DR.
ROBERSON, E. S. MS.

RODERICK, B. A. MR.
ROSSI, D. MR.
RYZEWIC, W. H. MR.
SAALFELD, F. DR.
SANDEL, E. A. MS.
SANDERS, R. L. MS.
SAUL, E. L. MR.
SAVITSKY, W. D. MR.
SCHAEFER, J. C. MR.
SCHAEFER JR, W. J. MR.
SCHNEIDER, P. A. MR.
SCHUBERT, D. CAPT
SCHUSTER JR., J. G. MR.
SHEA, R. M. BGEN
SHEPHARD, M. R. MS.
SHOUP, F. E. DR.
SIRMALIS, J. E. DR.
SLOCUM, W. S. MR.
SMITH JR, R. C. RADM
SOMOROFF, A. R. DR.
SPARKS JR, J. E. MR.
SPINRAD, R. DR.
STELLOH-GARNER, C. MS.
STOREY, R. C. MR.
STUSSIE, W. A. MR.
SZEMBORSKI, S. R. RADM
TAMBURRINO, P. M. MR.
TARRANT, N. J. MS.
THOMAS, J. R. BGEN
THOMAS, R. O. MR.
THROCKMORTON JR., E. L. MR.
TISONE, A. A. MR.
TOWNSEND, D. K. MS.
TRAMMELL, R. K. MR.
TURNER, R. F. MR.
TURNQUIST, C. J. MR.
UHLER, D. G. DR.
VERKOSKI, J. E. MR.
VICCIONE, D. E. DR.
WELCH, B. S. MS.
WEYMAN, A. S. MR.
WHITON, H. W. RADM
WHITTEMORE, A. MS.
WILLIAMS, G. P. MR.
WILLIAMS, M. J. LTGEN
WRIGHT, J. W. DR.
YOUNT, G. R. RADM
ZEMAN, A. R. DR.
ZIMET, E. DR.

FOR FURTHER INFORMATION CONTACT: Ms. Carmen Arrowood, Office of the Assistant Secretary, Manpower and Reserve Affairs, 1000 Navy Pentagon, Washington, DC 20350–1000, telephone (703) 696–5165.

Dated: July 20, 2000.

J.L. Roth,

Lieutenant Commander, Judge Advocate General's Corps,, U.S. Navy, **Federal Register** *Liaison Officer.*

[FR Doc. 00–19020 Filed 7–26–00; 8:45 am]

BILLING CODE 3810–FF–P

DENALI COMMISSION

Denali Commission Work Plan for Federal Fiscal Year 2002; Request for Comments

SUMMARY: The Denali Commission was established by The Denali Commission Act of 1998 to deliver the services of Federal Government in the most cost-effective manner practicable to communities throughout rural Alaska, many of which suffer from unemployment rates in excess of 50%. Its purposes include, but are not limited to, providing necessary rural utilities and other infrastructure that promote health, safety and economic self-sufficiency.

The Denali Commission Act requires that the Commission develop proposed work plans for future spending and that the annual work plans be published in the **Federal Register** for a 30-day period, providing an opportunity for public review and comment.

This **Federal Register** Notice serves to announce the 30-day opportunity for public comment on the Denali Commission Work Plan for Federal Fiscal Year 2002.

FOR FURTHER INFORMATION CONTACT: Jeffrey Staser, Federal Co-Chairman, Denali Commission, 510 'L' Street, Suite 410, Anchorage, Alaska 99501, Phone: (907) 271–1414, Fax: (907) 271–1415, Email: JStaser@denali.gov, http://www.denali.gov.

SUPPLEMENTARY INFORMATION: Copies of the Denali Commission Work Plan can be obtained by contacting the Denali Commission as provided in the **FOR FURTHER INFORMATION CONTACT** section above.

2002 Work Plan

October 1, 2000.

Vision

Alaska will have a healthy well-trained labor force working in a diversified and sustainable economy that is supported by a fully developed and well-maintained infrastructure.

Mission

The Denali Commission will partner with tribal, federal, state, and local governments and collaborate with all Alaskans to improve the effectiveness and efficiency of government services, to develop a well-trained labor force employed in a diversified and sustainable economy, and to build and ensure the operation and maintenance of Alaska's basic infrastructure.

Values

Catalyst For Positive Change—The Commission will be an organization through which agencies of government, including tribal governments, may collaborate, guided by the people of Alaska, to aggressively do the right things in the right ways.

Respect For People and Cultures—The Commission will be guided by the people of Alaska in seeking to preserve the principles of self-determination, respect for diversity, and consideration of the rights of individuals.

Inclusiveness—Provide the opportunity for all interested parties to participate in decision-making and carefully reflect their input in the design, selection, and implementation of programs and projects.

Sustainability—The Commission will promote programs and projects that meet the current needs of communities and provide for the anticipated needs of future generations.

Accountability—The Commission will set measurable standards of effectiveness and efficiency for both internal and external activities.

Part One: Denali Commission Purposes and Approach

Purposes of Commission

The Denali Commission Act of 1998, as amended (Division C, Title III, PL 105–277) states that the purposes of the Denali Commission are:

To deliver the services of the Federal Government in the most cost-effective manner practicable by reducing administrative and overhead costs.

To provide job training and other economic development services in rural communities, particularly distressed communities (many of which have a rate of unemployment that exceeds 50 percent).

To promote rural development, provide power generation and transmission facilities, modern communication systems, bulk fuel storage tanks, water and sewer systems and other infrastructure needs.

Challenges to Development and Economic Self-Sufficiency

Geography—The State of Alaska encompasses twenty percent of the landmass of the United States, encompassing five (5) climatic zones from the arctic to moderate rain forests in the south.

Isolation—Approximately 220 Alaskan communities are accessible only by air or small boat. Some village communities are separated by hundreds of miles from the nearest regional hub community or urban center.

Unemployment—The economy of rural Alaska is a mix of government or government-funded jobs, natural resource extraction and traditional Native subsistence activities. Many rural Alaskans depend on subsistence hunting, fishing and gathering for a significant proportion of their foods, but also depend on cash income to provide the means to pursue subsistence

activities. Cash paying employment opportunities in much of rural Alaska are scarce and are highly seasonal in many areas; unemployment rates exceed 50% in 147 communities.

High Cost and Low Standard of Living—Over 180 communities suffer from inadequate sanitation or a lack of safe drinking water. Residents face high electric costs: 61 cents per kilowatt-hour for electricity in a few communities (average in rural Alaska is approximately 40 cents per kilowatt-hour) even with State subsidies for rural power.

Commission Relationship With Other Organizations

The Commission intends to act as a catalyst to encourage local, regional, and statewide comprehensive assessment, planning and ranking of needed infrastructure improvements, economic development opportunities and training needs.

The Commission, working with existing agencies or other organizations whenever feasible, intends to improve coordination and to streamline and expedite the development of needed infrastructure, economic development and training.

The Commission may build on the work of both Federal and State of Alaska agencies to identify statewide needs, to establish priorities and to develop comprehensive work plans.

The Commission will seek the support and involvement of affected local communities, governing bodies, businesses and other organizations.

The Commission will encourage partnerships between government, non-profit organizations, and businesses to expedite sustainable economic and infrastructure development.

Commission Schedule

The Commission will hold public meetings quarterly and make every reasonable effort to maximize public participation in annual work plan development. With completion of this work plan the Commission schedule will be consistent with the federal budget cycle. The work plan will be updated at least annually.

Guiding Principles

The following principles are intended to foster careful and systematic planning and coordination on a local, regional and statewide basis for infrastructure and economic development, and to strongly support local involvement in project planning and implementation.

- Projects in economically distressed communities will have top priority for Denali Commission funding.
- Projects should be compatible with local cultures and values.
- Projects that provide substantial health and safety benefit, and/or enhance traditional community values, will generally receive priority over those that provide more narrow benefits.
- Projects should be sustainable.
- Projects should have broad public involvement and support. Evidence of support might include endorsement by affected local government councils (Municipal, Tribal, IRA, etc.), participation by local governments in planning and overseeing work, and local cost sharing on an 'ability to pay' basis.
- Priority will generally be given to projects with substantial cost sharing.
- Priority will generally be given to projects with a demonstrated commitment to local hire.
- Commission funds may supplement existing funding, but will not replace existing federal, state, local government, or private funding.
- The Commission will give priority to funding needs that are most clearly a federal responsibility.

Additional Guiding Principles for Infrastructure Projects

- A project should be consistent with a comprehensive plan.
- Any organization seeking funding assistance must have a demonstrated commitment to operation and maintenance of the facility for its design life. This would normally include an institutional structure to: levy and collect user fees if necessary, account for and manage financial resources, and have trained and certified personnel necessary to operate and maintain the facility.

Additional Guiding Principles for Economic Development Projects

- Priority will be given to projects that enhance employment in high unemployment areas of the State, with emphasis on sustainable, long-term local jobs or career opportunities.
- Projects should be consistent with statewide or regional plans.
- The Commission may fund demonstration projects that are not a part of a regional or statewide economic development plan if such projects have significant potential to contribute to economic development.

Economically Distressed Communities

The following criteria is to be used in designating economically distressed communities or regions included in Section 5.3 of the Denali Commission Code:

1. Per capita market income no greater than 67% of the U.S. average; and
2. Poverty rate at 150% of the U.S. average or greater; and
3. Three-year unemployment rate at 150% of the U.S. average or greater; or
4. Twice U.S. poverty rate and either (1) or (3) above.

As required by the Denali Commission Code, distressed community and/or region designations for a given fiscal year will be based upon data available March 31st of the preceding fiscal year. In as much as the primary purpose of the Denali Commission is to provide assistance to distressed communities or regions of Alaska, a minimum of 75% of funds available to the Commission in FY02 will be allocated to communities or regions so designated.

Part Two: Work Plan for FY 2002

The Commission determined that the scope and scale of infrastructure issues facing rural Alaska are staggering. Assessment of needs and refinement of estimates will be an ongoing process. The total of known infrastructure needs is estimated to be over $12 billion. Training and economic development needs have not been quantified, but the unmet needs in these areas are also believed to be quite large. The following table summarizes identified needs for infrastructure categories.

PRELIMINARY NEEDS ASSESSMENT

Funding category	Category class	Dollars	Dollars
Infrastructure	Housing Construction/Development	1,800,000,000	
	School Construction and Major Maintenance	530,000,000	
	Power Utilities	168,000,000	
	Fuel Storage	450,000,000	
	Drinking Water Facilities.		
	Waste Water Utilities	1,058,000,000	

PRELIMINARY NEEDS ASSESSMENT—Continued

Funding category	Category class	Dollars	Dollars
	Waste Management Facilities.		
	Health Care Facilities	235,000,000	
	Airport Facilities	926,000,000	
	Road Construction	7,500,000,000	
	Port Facilities	214,000,000	
	Telecommunications	(1)	
	Community Facilities	(1)	
	Other	(1)	
	Subtotal		12,881,000,000
Economic Development	Comprehensive Planning	(1)	
	Other	(1)	
Job Training, Education, Capacity Building	Comprehensive Planning	(1)	
	Other	(1)	
	Total		12,881,000,000

See Appendix A for Background Information on this table.
[1] Unknown.

The Denali Commission will collaborate with other funding agencies and with all impacted and interested parties to address identified needs on a priority basis. Allocation of Denali Commission funds to various funding categories and classes within those categories will be based on a formula agreed to by the Commission at the beginning of each fiscal year. For FY02 the formula allocates 75% of appropriated funds to infrastructure, 10% to economic development and 10% to job training and capacity building. The Commission has a statutory limit of 5% for administrative expenses. In addition to appropriated funds, the Commission receives $7–$10 million annually in interest from the Trans Alaska Pipeline Liability (TAPL) fund, which is earmarked for bulk fuel facility upgrade and maintenance.

Of necessity, the Commission's work must be phased over a number of years based on the urgency of competing needs and availability of funding. The theme of rural energy, as one important prerequisite to all other utilities and economic development, was selected as the top priority for infrastructure funds. Primary health care facilities were identified as the second infrastructure theme for the Commission beginning in FY00. These two themes will continue to be the primary areas of focus for infrastructure funds through FY02.

For planning purposes, the Commission has budgeted $53,000,000 using the Commission's approved formula for FY02.

FY02 budget request and TAPL interest funding—combined budget	FY02 budget request		TAPL interest funds		TAPL & FY02 combined	
Funding category	Funding level	Percentage	Funding level	Percentage	Funding level	Percentage
Infrastructure:						
Bulk Fuel	$7,750,000		$7,600,000	95	$15,350,000	
Power	10,000,000				10,000,000	
Health Clinics	16,000,000				16,000,000	
Subtotal	33,750,000	75			41,350,000	78
Economic Development:						
Subtotal	4,500,000	10			4,500,000	8.5
Training:						
Subtotal	4,500,000	10			4,500,000	8.5
Administration:						
Subtotal	2,250,000	5	400,000	5	2,650,000	5
Total	$45,000,000	100	$8,000,000	100	$53,000,000	100

Notes:
1. The percentages shown under the FY02 Budget Request column were selected by the Commissioners.
2. TAPL interest funds by statute are for bulk fuel projects only.

Development and execution of the Administrative Budget is solely the responsibility of the Federal Co-Chair. Allocation of funds within the balance of the budget will be made by the full Denali Commission, utilizing the guiding principles outlined in Part I of this document, and priority systems designed specifically for each budget category.

Project implementation will generally be accomplished through state, local or federal government entities or non-profit organizations. It shall be the responsibility of all such implementing organizations to comply with all applicable laws. Any special requirements will be articulated in the funding agreement between the Denali Commission and the funding recipient.

As indicated above, 75% of Denali Commission funds are designated for priority infrastructure themes and those funds are distributed using priority systems designed for each theme. Concurrently the Commission

encourages communities and regional entities to complete comprehensive community and economic development plans. Priority systems for themes selected for funding by the Commission give credit to communities with current comprehensive plans.

Projects resulting from funding of infrastructure themes generally are consistent with high priorities identified in community plans. The existence of community plans greatly facilitates the location, design, and completion of infrastructure projects within a community. The Denali Commission also reserves approximately 10% of its funding for economic development projects, which commonly are identified in local, or regional economic development plans.

The Commission also participates in the organization and execution of regional ''economic summits.'' These summits, which are generally held on an annual basis throughout the State, bring key state and federal agencies together with communities and regional organizations for the purpose of matching needs identified in community and regional comprehensive plans with federal, state and other available funding.

Appendix A—Housing Construction/Development

Need: $1.8 billion.

Annual Funding: $58–87 million.

Source: Housing and Urban Development (HUD) FY 1999 Report.

Background: According to the FY99 report published by HUD, Alaska has a need for 12,519 new units. At an average cost of $145,000 per unit, the total need for new housing is approximately $1.8 billion. This estimate does not include repairs and renovation projects. The number of units needed has increased from the 1990 census, which showed over 11,000 units needed.

At the current rate, 400 to 600 units are constructed in Alaska each year.

Projects are prioritized and funded in a variety of ways including grants to local housing authorities, regional housing authorities, low interest loans, and transfers to other agencies.

Entities providing funding for housing include, but may not be limited to, HUD, Alaska Housing Finance Corporation, and the U.S. Department of Agriculture.

School Construction and Major Maintenance

Need: $530,183,470 million.

Annual Funding: Annual funding varies from year to year.

Source: Final Agency Decision: 4/5/99, Project Priority List published by the State of Alaska Department of Education and Early Development (DEED).

Background: Based on requests from individual school districts, the State of Alaska DEED has compiled a listing of school construction and major maintenance projects. DEED has reviewed the project requests and distilled the eligible projects to a list that totals $530,183,470.

The State of Alaska recently passed a bond package for State FY01 that addresses numerous school construction and major maintenance needs from the DEED list. This program is the primary responsibility of the State of Alaska and will remain such. However, there may be opportunities for the Denali Commission to partner with the state in areas that are a federal responsibility or that are related to the efforts of the Denali Commission. Examples of this partnership are the bulk fuel storage needs of a school or the school's role in developing job training in a community.

The Denali Commission will continue to work with DEED to determine if there is an opportunity for the Commission to assist with some federally mandated component of the program.

Power Utilities

Need: $168 million.

Annual Funding: No program of annual funding.

Source: Alaska Energy Authority.

Background: According to the Alaska Energy Authority (formerly the State of Alaska Division of Energy), they have needs in the following categories for the following amounts.

$68,000,000—Power Plant Construction and Rehabilitation.

$100,000,000—Power distribution system construction, expansion and rehabilitation.

The Alaska Energy Authority (AEA) is a state agency commissioned with oversight of energy related infrastructure in rural Alaska. The agency functions predominantly in areas that are typically not covered by a utility cooperative. These power plants and distribution systems are typically in areas where the economic base is insufficient to bond or self-fund construction of the power facilities, and other sources of funding are required. At the current time, the AEA is the only source of funding for these projects, and there is no defined funding stream to take care of the above stated needs.

Another interest of the Denali Commission is to work towards conserving energy usage in rural communities. Generator efficiencies, structural insulation, waste heat recovery, transmission efficiencies, and alternative power generation are all possible topics of consideration for the Commission.

Fuel Storage

Need: $450 million.

Annual Funding: $15–18 million ($8–10 million of which is Denali Commission funds).

Source: AEA briefing report dated September 24, 1999.

Background: The AEA initiated an assessment of bulk fuel tank farms in rural Alaska communities in 1996. This assessment should be completed by Fall 2000. The project assessed the condition of the tank farms, including the total fuel capacity of each in terms of gallons.

Approximately 180 communities have been surveyed to date. Total storage capacity of the surveyed communities is 75,221,754 gallons. A more complete cost and assessment for community bulk fuel consolidation will be developed by AEA.

Water and Wastewater

Need: Current need: $850 million (Funded fiscal years 1960—2001: $1,140,800,000 billion)

Annual Funding: There are six existing primary funding sources for developing and improving water and wastewater facilities in rural Alaska. Those sources and the amounts contributed in fiscal year 2001 are shown below.

- U.S. Public Health Service—Indian Health Service $17 million
- U.S. Environmental Protection Agency Drinking Water Tribal Set-Aside $4,098,800
- U.S. Environmental Protection Agency Clean Water Tribal Set-Aside $2,295,000
- U.S. Environmental Protection Agency Infrastructure Grant $26,649,450
- U.S. Department of Agriculture-Rural Development $19,464,400
- State of Alaska, Village Safe Water $15,371,250

Total: $84,878,900.

While these amounts vary from year to year, the annual average for fiscal years 1997 through 2001 is $78 million. The trend has been towards increased funding levels. Secondary funding sources include federal transportation funds and housing funds that contribute in a less direct way to water and sewer system improvements.

Background: Assistance in developing water and wastewater facilities in rural Alaska is provided to communities through two programs. The Alaska Native Tribal Health Consortium (ANTHC) is the organization responsible for administering Indian Health Service, and EPA Indian Set-Aside sanitation construction funds in Alaska. The Alaska Department of Environmental Conservation's Village Safe Water (VSW) program is the organization responsible for administering sanitation construction funds provided by the State, EPA (non-Tribal Set-Aside), and the USDA-Rural Development.

Both ANTHC and VSW work with rural communities to plan design and construct sanitation systems. ANTHC and VSW have developed a close working relationship despite the relative recent transfer of the sanitation program from IHS to ANTHC in October 1998. The priority funding lists of both organizations are coordinated and generally compliment each other. ANTHC predominately works in Alaska communities with Native-owned homes, whereas VSW works in all rural communities (Native and non-Native). A lead agency is designated for each community receiving assistance. Lead agencies typically have responsibility for administering all state and federal funding in the community.

Existing funding streams and programs are making progress towards satisfying the overall need for sanitation facilities in rural Alaska. An estimated remaining need of $850 million and a current funding level of $85 million combine to suggest a 10-year timeframe for meeting the need. The Governor's Council on Rural Sanitation set a target funding level of $110 million per year.

Increased federal funding is being sought through existing funding streams to reach that target.

The Denali Commission has not targeted water and wastewater improvements for infrastructure funding due to funding and effort already underway in this sector or critical infrastructure. However, the Commission is involved in improving planning and interagency coordination.

Primary Health Care Facilities

Need: $235 million

Annual Funding: Unknown

Source: Alaska Rural Primary Care Facility Needs Assessment—Interim Report dated June 26, 2000. *Background:* The Denali Commission in partnership with the Alaska Native Tribal Health Consortium, the Indian Health Service, and the Alaska Department of Health and Social Services embarked on a survey in FY00 to quantify the cost of rural primary care facility improvements. It is the intent of all parties to build on this initial survey and to identify additional health related infrastructure needs in rural Alaska (beyond primary care) including mental health, dental care, itinerant health service providers' quarters, etc.

Airport Facilities

Need: $1 billion

Annual Funding: $58–120 million

Source: 1999 Transportation Needs and Priorities in Alaska; Published by the State of Alaska Department of Transportation and Public Facilities, and the current FAA Aviation Improvement Program (AIP).

Background: The Federal Aviation Administration currently provides most of the funding for airport projects throughout the state. The state or local sponsor will contribute roughly 10% in the form of match. There are 1,112 designated airports, seaplane bases, and aircraft landing areas in the state of Alaska. The Alaska Department of Transportation & Public Facilities (ADOT&PF) owns and operates 261 public airports, the majority of Alaska's public airports. Additionally, 23 public airports are owned and operated by local governments.

Backlog of airport projects in the state amounts to approximately $1 billion.

Historically, funding that the state receives for airports from the FAA—AIP has ranged from $58 million in 1990, to $81 million in 1998. As a result of the recent passage of AIR–21 legislation, a funding increase is expected and scheduled for beginning Oct 2000 up to a potential amount of $120 million for Alaska.

Road Construction and Major Maintenance

Need: $6 billion

Annual Funding: $350 million

Source: Transportation Needs and Priorities in Alaska published by the State of Alaska Department of Transportation and Public Facilities.

Background: The State of Alaska administers most of the Federal Highway Administration (FHWA) funding allocated to Alaska with the exception of money specifically designated for the Bureau of Indian Affairs (BIA), which currently amounts to approximately $14 million per year. Although overall funding levels are up for roads, the BIA share has recently slipped from $16 million annually under ISTEA (1991–1997). The BIA funding does not go far considering it must provide for approximately 200 tribes within Alaska. BIA officials have recently announced that any given village can expect one project every 20 years, on average.

Of note, the BIA is currently conducting a rule-making process to revamp the national formula that distributes BIA funding among the states. The legislative language directing this new formula is more Alaska-friendly, but the past distribution formulas have not been favorable to Alaska and it remains to be seen if the new formula will redress this situation.

One important distinction between FHWA and BIA funding for roads is the long-term maintenance obligation. Under FHWA, the recipient is responsible for maintenance in perpetuity, with no federal support for this activity. Under the BIA funding system, such roads are then added to the IRR (or Indian Reservation Road system) and are eligible for a share of a national pot of money allocated to maintenance of IRR roads.

Overall needs for highway and road projects were estimated at $6 billion in 1999. In the current TEA–21 era, average funding levels are estimated at approximately $350 million not including possible discretionary grants the state may receive. While this is up substantially from approximately $220 million under ISTEA, the list of unmet needs has been growing even faster as villages and all communities become more aware of this potential funding source.

Most FHWA funding received by the state stays in larger auto-dependent communities, with some funding going to rural communities largely for sanitation roads and trail markings. Funding for projects off the road system goes primarily to larger hub communities.

Improved surface transportation can have many positive effects including lowering costs for goods and services, improving village to village interaction, and allowing for state and federal investments in schools, clinics, airports, harbors, and tank farms to serve more communities per project.

Port Facilities

Need: $247 million approximately

Annual Funding: Varies year by year, typically between $0–5 million

Source: Transportation Needs and Priorities in Alaska published by the State of Alaska Department of Transportation and Public Facilities.

Background: Port and harbor facilities are necessary investments to support maritime commerce, commercial fishing, subsistence, water recreation and general economic development. Wholesale, retail, transportation, and services industries supporting marine activities create jobs and other opportunities. Coastal and riverside communities with good facilities will have safer access, greater mobility, more opportunity and a better quality of life than those without. Port and harbor facilities must offer access to waterways, protection from waves, and water deep enough for navigation. Few communities have perfect harbor conditions naturally. Many communities have spurred economic growth and given vitality to their communities through making improvements by dredging channels and basins, and constructing breakwaters and docking facilities. These improvements open the transportation corridor for maritime commerce.

Port and harbor development in the State has been a close partnership between local government, the state, and the federal government. The federal government has always limited investment and interest to those navigation improvements that satisfy national economic development criteria. State assistance has ranged from complete financial support to little or no financial support. While State assistance expanded and expectations grew during the lucrative days of high oil production, the State has retreated to the basic premise that port and harbor projects require a substantial local funding commitment to be eligible for State assistance. Though not a dedicated funding source, the marine users fuel tax is the traditional foundation of small boat harbor improvements in the State. General obligation bonds have been the foundation of State assisted port development.

The threshold for federal involvement, an assessment of national benefits and costs, is very high. For most of Western Alaska, the geography, climate and low population density weigh heavy against projects as they meet this test. The federal navigation improvement program is helpful in making an existing improvement more productive but it is not useful in creating an opportunity for improvement that does not already exist.

Port and harbor projects can reduce the delivery cost of goods and services, increase the frequency of delivery, reduce damage loss during transport, reduce environmental risk, improve the value of regionally exported resources and products, and improve the productivity, safety and quality of life for people in a region. There may be opportunities for port and harbor development that are consistent with the goals and objectives of the Denali Commission.

Telecommunications

Need: Unknown

Annual Funding: Unknown

Background: Telecommunications and Internet technologies, which are revolutionizing daily life in the United States, are not reaching most Alaskan communities. The positive impact Internet connections will have on education, training, healthcare and economic development in rural communities cannot be overemphasized. The negative impact of leaving rural communities behind in technological advances will only further compound the challenges of self-sustainability for rural Alaska.

The remoteness and sparse populations that so uniquely identify rural Alaska are also the primary reason private telecommunications find it difficult to justify connections in most rural communities.

Typically, small communities have access only through the local public school or library, and tribes may have access through a program being implemented by the

Department of Interior. However, private users are prohibited from accessing these federally subsidized services. Thus, an individual who wishes to access vital information, obtain distance education or training, open a web-site for commerce, or have an e-mail account from home, must use ''1800 dial-up access.'' The cost of such service in rural Alaska is between $200–$400 per month for basic e-mail and minimal web browsing.

The Denali Commission is in the process of evaluating the availability of basic telecommunications, Internet technologies and other advanced telecommunications through a statewide survey that will be completed in August 2000. The Commission is interested in the availability of telecommunications infrastructure in relation to the future of economic development, education, training and healthcare in rural Alaska.

Community Facilities

Need: Unknown

Annual Funding: Unknown

Background: Communities have a need for community assembly facilities for various purposes, including planning, meetings, traditional functions, and recreation for youth. These facilities, when available, are heavily used in rural communities. No assessment mechanism is in place for determining statewide needs for community facilities.

Appendix B—Infrastructure

In the evolution of the Denali Commission and its approach to infrastructure development some principles have been established. These include the following:

• Selection of infrastructure themes for allocating funds. In FY99 rural energy was selected as the primary infrastructure theme and that priority was continued in FY00 and is expected to continue in FY01 and beyond. In FY00 rural health care facilities were selected as the second infrastructure theme.

• Selection of program/project partners to carry out infrastructure development. The Alaska Energy Authority (AEA) was selected as a Denali Commission partner for rural energy projects. AEA was selected because of its demonstrated capability to prioritize and implement rural energy projects. The overriding point in selection of a program/project partner is that the Commission wishes to utilize existing capabilities provided by state or federal agencies or other organizations. More than one partner may be identified to participate in carrying out Commission sponsored programs/projects for a particular theme.

• Project selection by the Commission and/or the program/project partner must be defendable and credible. In the case of AEA, two separate comprehensive statewide project priority lists had been developed—one for bulk fuel storage facilities, and a second for power generation/distribution projects. As in the case of AEA the Commission will utilize existing credible priority systems. Where a credible statewide priority methodology for a selected theme does not exist, the Commission in cooperation with appropriate organizations will foster the development of a system. This is illustrated by the Commission's efforts in partnership with the Alaska Department of Health and Social Services, the Indian Health Service, and the Alaska Native Tribal Health Consortium to develop a prioritization methodology for primary health care facilities.

• Theme selection is a methodical process. The Commission has stressed the importance of comprehensive investigation and exploration of infrastructure themes so that Commission resources are strategically funneled to ''gaps'' in state and federal funding streams. Carrying out needs assessments on various infrastructure themes is central to the development of a theme. Energy, telecommunications, and rural primary health care facilities are examples of assessments that were initiated in conjunction with interested state and federal agencies in the Commission's first year.

• Commission partners are responsible for compliance with procedural and substantive legal requirements. It is the expectation of the Denali Commission that partners will comply with all applicable local, state and federal laws in carrying out Commission funded programs/projects. For example the partner must address NEPA and OSHA regulations, federal auditing requirements, competitive procurement issues and so forth. As a result, the Commission will look to partners who have demonstrated both administrative and program/project management success.

• Adherence to the successful project management elements of time, budget and quality. Each of these factors is central to Denali Commission agreements with partners. The Commission wants to put our partners in a position of success in meeting the triple constraint of project management: deliver the project on time, on budget and completion of the full project scope. The challenge to the Commission is to allow sufficient flexibility for each partner to carry out the programs/projects within their own established methods while assuring confident project completion and meeting all requirements of applicable laws and regulations. For example, the AEA employs a project methodology that relies heavily on force account construction (locally sponsored government crews). AEA also uses construction contracting to a lesser degree. In light of the Commission's mandate to address economic development in rural Alaska, force account construction is a good fit. However, for other partners, undertaking other infrastructure themes, construction contracting may be more appropriate. In short, each agreement with a partner organization must be tailored to fit their approach to program/project management.

Rural Energy

AEA has employed a two-step approach to bulk fuel project funding that is strongly supported by the Commission. Starting at the top of the AEA priority list, projects are provided 35% design funds one or more years before being eligible for capital funding. This allows for more accurate project cost estimates, resolution of easement and land issues, development of agreements between various local parties in site selection and tank farm ownership/maintenance. This step also serves to filter projects that are not ready for construction, for one reason or another, from advancing to the second step of project funding. This two-step approach ensures that funding does not sit unused by projects that are not ready for construction. Once a project has resolved any obstacles at the 35% design stage, then they are eligible for capital funding.

It is expected that AEA will reevaluate its priority list from time to time in order to factor in new information, particularly information from the statewide energy strategy. This reevaluation may result in some modification of the list. Funding priorities will also be subject to 'readiness to proceed' considerations as described in part above.

Rural Primary Care Facilities

In past, communities have constructed clinics based upon available grant funds (typically community development block grants of $200,000 to $500,000). Consequently clinic square footage was based upon available funding and not necessarily upon health care delivery service appropriate for the population and demographics of the community.

Many clinics are therefore undersized. In FY99 the Commission allocated $300,000 to undertake a needs assessment for rural primary care facilities. This needs assessment is scheduled for completion by October 2000. The assessment will develop a database of primary health care facility needs statewide. This effort also includes development of a project prioritization methodology.

In FY00, the Commission allocated $1,000,000 for clinic completion projects. At least five communities have previously received CDBG funding for clinics and were not able to complete the facilities due to a number of reasons. This clinic funding should allow the Commission to develop technical and administrative skills in the event FY01 and FY02 Commission appropriations include health care facilities.

The Commission has yet to identify partners for carrying out the rural primary care facilities projects.

Denali Commission's Training Strategy

Background

The Commission realizes that proper and prudent investment in public infrastructure must include a component for training local residents to maintain and operate publicly funded infrastructure. The Commission further realizes that through its' investment in public infrastructure, such as bulk fuel storage facilities, it is creating numerous jobs related to the construction of these facilities and must develop a strategy to ensure local residents are properly trained to receive these jobs.

Therefore, the Denali Commission created a training subcommittee to develop a strategy that would address the job training needs of Alaskan communities. The initial training subcommittee was comprised of Commissioner Mano Frey, Commissioner Mark Hamilton, and the Alaska Human Resource Investment Council Executive Director Mike Andrews. The subcommittee

worked with industry, state, non-profit, and federal organizations developed the Denali Commission's Training Strategy.

The Denali Commission's Training Strategy creates a statewide system to increase the local employment rates in Alaskan communities through the development of skills necessary to construct, maintain, and operate public infrastructure, while also leveraging the ongoing efforts of the State of Alaska in job training for rural Alaskans.

Subsequently, the Commission approved 10% of the FY00 budget for implementation of the developed Training Strategy. Through this funding the Commission ensures local residents are employed on public facility construction projects in their communities, while also protecting the Denali Commission's investment in infrastructure by ensuring local residents are properly trained in the operations and maintenance of completed facilities.

The Denali Commission's Training Strategy involves several components that create a statewide system for job training outreach, coordination and delivery in rural Alaska. The Commission has partnered with several statewide organizations that will perform the necessary functions that make up the Denali Commission's Training Strategy. These organizations and their respective roles are as follows:

Partners

Organization: Alaska Works Partnership

Alaska Works Partnership represents a statewide coalition of Alaska's twenty jointly administered building and construction trades apprenticeship programs.

Role: Apprenticeship Outreach Initiative

A program that provides outreach to rural residents to present the opportunity to participate in the numerous Bureau of Apprenticeship and Training's approved construction apprenticeship programs.

Organization: Alaska Native Coalition on Employment and Training (ANCET)

ANCET is a statewide organization comprised of 13 Alaska native regional non-profits to act from a statewide perspective on education, employment, training, and economic development issues and concerns specific to Native people.

Role: Regional Coordination Initiative

A program that is responsible for developing a system capable of coordinating the employment and training needs of the villages and regional ANCET offices with the workforce demands of Denali Commission projects, and other state and federal public infrastructure projects.

Organization: Alaska Vocational Technical Center (AVTEC)

AVTEC provides accessible technical and related training to a statewide multi-cultural population for employment in the dynamic Alaskan community.

Role: Building Maintenance and Repairer Apprenticeship Delivery Program

A program that provides technical assistance to housing authorities and other community employers to enhance the availability of the Building Maintenance Repairer Apprenticeships (BMR) in rural Alaska. This program will provide and adapt the BMR curriculum to the needs of rural Alaskans.

Organization: Associated General contractors (AGC) of Alaska

The AGC of Alaska is a non-profit construction trade association consisting of general contractors, subcontractors and industry professionals dedicated to improving the professional standards of the construction industry.

Role: Construction Career Pathways Initiative

A program that will help increase the involvement of industry and local employers in schools, provide more school-to-work experience for students, develop direct connection with apprenticeship and post-secondary training programs and ultimately prepare a new workforce.

Organization: State of Alaska Dept. of Labor and Workforce Development

The Department of Labor and Workforce Development fosters and promotes the welfare of the wage earners of the state, improves their working conditions and advances their opportunities for profitable employment.

Role: Denali Training Fund

The Denali Training Fund Program provides financial assistance for specific training needed by local residents to become employed on Denali Commission projects and other state and federally funded infrastructure projects. The Denali Training Fund also provides financial assistance for training needed by local residents to properly operate and maintain completed Denali infrastructure and other state and federally funded infrastructure. The Department of Labor and Workforce Development administers the Denali Training Fund by receiving applications for job training needs in rural communities and leverages these funds with other state funded programs.

Summary

The Training Strategy provides the Denali Commission the flexibility for future investment in job training needs statewide. Currently the Commission's partners and the Denali Training Fund are focusing on jobs created by the construction of energy related projects, such as bulk fuel storage tanks and rural power system upgrades. In the future, the Training Strategy will focus its efforts on other areas where the Commission is investing, such as the job training needs related to the construction and operations of health clinics.

With this strategy in place, the Denali Commission is confident it will provide the necessary component of job training that is imperative to the success of infrastructure construction in Alaska.

Economic Development

In an effort to promote economic development in rural and distressed communities, a number of actions have been initiated.

The Denali Commission believes that a primary key to successful economic development in small communities is adequate public infrastructure. The larger a venture, the more basic infrastructure is necessary. Ultimately it is expected that industry will begin paying for infrastructure improvements that benefit their business. State and federal governments can contribute to development of local economies by assisting in funding local infrastructure projects.

Mini-Grant Support

This program provides grants not to exceed $30,000 for communities to use on projects such as:

- Comprehensive Community Strategy development;
- Project specific feasibility study, business plan, or engineering study;
- A project that supports economic or community development; or
- A capital project.

Communities apply directly to their regional Alaska Regional Development Organization (ARDOR). If an ARDOR does not exist in a region, applications will be submitted directly to the Department of Community and Economic Development (DCED). Projects will be funded throughout the state using a combination of Denali Commission, USDA-Forest Service, and other available funding.

The goal of this initiative is to encourage communities to develop and utilize locally based planning strategies to foster community and economic development opportunities.

Entrepreneurship Initiative

For projects that may have merit, but are private sector economic development initiatives, the Denali Commission encourages entrepreneurs to utilize the following assistance strategy.

- Prepare Business Plan and loan request.
- Submit to Alaska Regional Development Organization (ARDOR) or Economic Development Council (EDC) for your area for technical assistance.
- Projects will be reviewed with consideration of the Denali Commission published guiding principles.
- Projects that meet Denali Commission principles will be forwarded from the regional support organizations to the State of Alaska Funding Forum for review.
- Projects determined to be economically viable may be forwarded to the Denali Commission for assistance in developing a funding plan.

Development Strategy

The Denali Commission encourages communities/tribes to build a local comprehensive plan and strategy, a component of which will be economic development. A comprehensive plan may also be referred to as a Development Strategy. Communities are encouraged to work with regional organizations such as ARDOR's, Regional Non-Profit Corporations, Borough Governments and Regional for-profit organizations to develop comprehensive strategies of which, economic development will be a component. Regional strategies

should take into consideration, existing regional planning and strategy efforts including, but not limited to the efforts of the FAA, HUD, Alaska DOT, ANTHC, Alaska VSW, State Division of Public Health, Alaska Department of Public Safety, regional non-profits and others.

The Denali Commission encourages the state to assist with technical support and funding at the local and regional level to build local and regional development strategies. The Denali Commission also encourages state and federal governments to utilize the local and regional development strategies when prioritizing projects in the state or in a region.

Alvin L. Ewing,

Chief Of Staff.

[FR Doc. 00–18973 Filed 7–26–00; 8:45 am]

BILLING CODE 3300–$$–P

DEPARTMENT OF ENERGY

Federal Energy Regulatory Commission

[Docket No. ER00–2677–000]

American Ref-Fuel Company of Delaware Valley, L.P.; Notice of Issuance of Order

July 24, 2000.

American Ref-Fuel Company of Delaware Valley, L.P. (American Ref-Fuel) submitted for filing a rate schedule under which American Ref-Fuel will engage in wholesale electric power and energy transactions at market-based rates. American Ref-Fuel also requested waiver of various Commission regulations. In particular, American Ref-Fuel requested that the Commission grant blanket approval under 18 CFR Part 34 of all future issuances of securities and assumptions of liability by American Ref-Fuel.

On July 14, 2000, pursuant to delegated authority, the Director, Division of Corporate Applications, Office of Markets, Tariffs and Rates, granted requests for blanket approval under Part 34, subject to the following:

Within thirty days of the date of the order, any person desiring to be heard or to protest the blanket approval of issuances of securities or assumptions of liability by American Ref-Fuel should file a motion to intervene or protest with the Federal Energy Regulatory Commission, 888 First Street, NE, Washington, DC 20426, in accordance with Rules 211 and 214 of the Commission's Rules of Practice and Procedure (18 CFR 385.211 and 385.214).

Absent a request for hearing within this period, American Ref-Fuel is authorized to issue securities and assume obligations or liabilities as a guarantor, indorser, surety, or otherwise in respect of any security of another person; provided that such issuance or assumption is for some lawful object within the corporate purposes of American Ref-Fuel, and compatible with the public interest, and is reasonably necessary or appropriate for such purposes.

The Commission reserves the right to require a further showing that neither public nor private interests will be adversely affected by continued approval of American Ref-Fuel's issuances of securities or assumptions of liability.

Notice is hereby given that the deadline for filing motions to intervene or protests, as set forth above, is August 14, 2000.

Copies of the full text of the Order are available from the Commission's Public Reference Branch, 888 First Street, NE, Washington, DC 20426. The Order may also be viewed on the Internet at *http://www.ferc.fed.us/online/rims.htm* (call 202–208–2222 for assistance).

David P. Boergers,

Secretary.

[FR Doc. 00–18980 Filed 7–26–00; 8:45 am]

BILLING CODE 6717–01–M

DEPARTMENT OF ENERGY

Federal Energy Regulatory Commission

[Docket No. EL00–92–000]

North Central Missouri Electric Cooperative, Inc.; Notice of Filing

July 19, 2000.

Take notice that on July 17, 2000, North Central Missouri Electric Cooperative, Inc. (North Central) filed a request for waiver of the requirements of Order No. 888 and Order No. 889 pursuant to 18 CFR 35.28(d) of the Federal Energy Regulatory Commission's (Commission) Regulations. North Central's filing is available for public inspection at its offices in Milan, Missouri.

Any person desiring to be heard or to protest such filing should file a motion to intervene or protest with the Federal Energy Regulatory Commission, 888 First Street, NE., Washington, DC 20426, in accordance with Rules 211 and 214 of the Commission's Rules of Practice and Procedure (18 CFR 385.211 and 385.214). All such motions and protests should be filed on or before August 16, 2000. Protests will be considered by the Commission to determine the appropriate action to be taken, but will not serve to make protestants parties to the proceedings. Any person wishing to become a party must file a motion to intervene. Copies of this filing are on file with the Commission and are available for public inspection. This filing may also be viewed on the Internet at http://www.ferc.fed.us/online/rims.htm (call 202–208–2222 for assistance).

David P. Boergers,

Secretary.

[FR Doc. 00–18968 Filed 7–26–00; 8:45 am]

BILLING CODE 6717–01–M

DEPARTMENT OF ENERGY

Federal Energy Regulatory Commission

[Docket No. QF84–447–004]

O.L.S. Energy-Camarillo; Notice of Amendment to Application for Commission Recertification of Qualifying Status of a Cogeneration Facility

July 19, 2000.

Take notice that on July 13, 2000, O.L.S. Energy-Camarillo, c/o Delta Power Company, LLC, 89 Headquarters Plaza, North Tower, 14th Floor, Morristown, NJ 07960 filed with the Federal Energy Regulatory Commission revised pages to its application for recertification of a facility as a qualifying cogeneration facility pursuant to § 292.207(b) of the Commission's regulations, as well as an ownership chart.

The Facility is a topping cycle cogeneration facility consisting of one GE Model LM2500 gas turbine in combined cycle configuration. The Facility is interconnected with, sells power to and receives backup and maintenance power from Southern California Edison Company. Recertification of the Facility is being requested by Applicant to reflect recent changes in the ownership structure of the Facility.

Any person desiring to be heard or to protest said filing should file a motion to intervene or protest with the Federal Energy Regulatory Commission, 888 First Street, NE., Washington, DC 20426, in accordance with Rules 211 and 214 of the Commission's Rules of Practice and Procedure (18 CFR 385.211 and 385.214). All such motions and protests should be filed on or before August 14, 2000. Protests will be considered by the Commission to determine the appropriate action to be taken, but will not serve to make protestants parties to the proceedings. Any person wishing to

become a party must file a motion to intervene. Copies of this filing are on file with the Commission and are available for public inspection. This filing may be viewed on the Internet at http://www.ferc.fed.us/online/rims.htm (call 202–208–2222 for assistance).

David P. Boergers,

Secretary.

[FR Doc. 00–18970 Filed 7–26–00; 8:45 am]

BILLING CODE 6717–01–M

DEPARTMENT OF ENERGY

Federal Energy Regulatory Commission

[Docket No. QF84–443–004]

O.L.S. Energy-Chino; Notice of Amendment To Application for Commission Recertification of Qualifying Status of a Cogeneration Facility

July 19, 2000.

Take notice that on July 13, 2000, O.L.S. Energy-Chino, c/o Delta Power Company, LLC, 89 Headquarters Plaza, North Tower, 14th Floor, Morristown, NJ 07960 filed with the Federal Energy Regulatory Commission revised pages to its application for recertification of a facility as a qualifying cogeneration facility pursuant to § 292.207(b) of the Commission's regulations, as well as an ownership chart.

The Facility is a topping cycle cogeneration facility consisting of one GE Model LM2500 gas turbine in combined cycle configuration. The Facility is interconnected with, sells power to and receives backup and maintenance power from Southern California Edison Company. Recertification of the Facility is being requested by Applicant to reflect recent changes in the ownership structure of the Facility.

Any person desiring to be heard or to protest such filing should file a motion to intervene or protest with the Federal Energy Regulatory Commission, 888 First Street, NE., Washington, DC 20426, in accordance with Rules 211 and 214 of the Commission's Rules of Practice and Procedure (18 CFR 385.211 and 385.214). All such motions and protests should be filed on or before August 14, 2000. Protests will be considered by the Commission to determine the appropriate action to be taken, but will not serve to make protestants parties to the proceedings. Any person wishing to become a party must file a motion to intervene. Copies of this filing are on file with the Commission and are available for public inspection. This filing may also be viewed on the Internet at http://www.ferc.fed.us/online/rims.htm (call 202–208–2222) for assistance).

David P. Boergers,

Secretary.

[FR Doc. 00–18969 Filed 7–26–00; 8:45 am]

BILLING CODE 6717–01–M

DEPARTMENT OF ENERGY

Federal Energy Regulatory Commission

[Docket No. EG00–227–000]

Panda-Brandywine, L.P.; Notice of Application for Commission Determination of Exempt Wholesale Generator Status

July 19, 2000.

Take notice that on July 14, 2000, Panda-Brandywine, L.P., (Applicant), 4100 Spring Valley Road, Suite 1001, Dallas, Texas 75244, filed with the Federal Energy Regulatory Commission an application for determination of exempt wholesale generator status pursuant to Part 365 of the Commission's regulations.

Applicant owns and operates a nominal 253 MW electric generating facility located near Brandywine, Maryland. The facility's electricity is sold exclusively at wholesale.

Any person desiring to be heard concerning the application for exempt wholesale generator status should file a motion to intervene or comments with the Federal Energy Regulatory Commission, 888 First Street, NE., Washington, DC 20426, in accordance with Rules 211 and 214 of the Commission's Rules of Practice and Procedure (18 CFR 385.211 and 385.214). The Commission will limit its consideration of comments to those that concern the adequacy or accuracy of the application. All such motions and comments should be filed on or before August 9, 2000, and must be served on the applicant. Any person wishing to become a party must file a motion to intervene. Copies of this filing are on file with the Commission and are available for public inspection or on the Internet at http://www.ferc.fed.us/online/rims.htm (please call (202) 208–2222 for assistance).

David P. Boergers,

Secretary.

[FR Doc. 00–18967 Filed 7–26–00; 8:45 am]

BILLING CODE 6717–01–M

DEPARTMENT OF ENERGY

Federal Energy Regulatory Commission

[Docket No. CP99–163–000; CA Clearinghouse No. SCH99041103]

Federal Energy Regulatory Commission and California State Lands Commission: Questar Southern Trails Pipeline Company; Notice of Completion and Availability of the Final Environmental Impact Statement/Environmental Impact Report for the Proposed Southern Trails Pipeline Project

July 21, 2000.

The staffs of the Federal Energy Regulatory Commission (FERC) and the California State Lands Commission (CSLC) have completed work on a joint Final Environmental Impact Statement/Environmental Impact Report (FEIS/R) on natural gas pipeline facilities proposed by Questar Southern Trails Pipeline Company (QST) in the above-referenced docket.

The FEIS/R was prepared as required by the National Environmental Policy Act and the California Environmental Policy Act. Its purpose is to inform the public and the permitting agencies about the potential adverse and beneficial environmental impacts of the proposed project and its alternatives, and recommend mitigation measures which would reduce any significant adverse impacts to the maximum extent possible and, where feasible, to a less-than-significant level. The staffs conclude that approval of the proposed project, with appropriate mitigating measures as recommended, would have limited adverse environmental impact.

The Southern Trails Pipeline Project involves the conversion of an existing crude oil pipeline (known as the ARCO Four Corners Pipeline Line 90 System) to natural gas service, and the construction of new pipeline and seven compressor stations. The FEIS/R assesses the potential environmental effects of the conversion, construction, and operation of the following facilities in California, Arizona, Utah, and New Mexico:

- About 675 miles of existing pipeline to be converted from crude oil to natural gas service (592 miles of 16-inch, 80 miles of 12-inch, and 3 miles of 22-inch-diameter pipeline);
- Five new pipeline extensions totaling about 43.2 miles;
- Four reroutes/realignments of the existing pipeline totaling about 9.3 miles;

• 39 replacement segments of the existing pipeline totaling about 7.3 miles;

• 240 excavation sites along existing pipeline totaling 5.1 miles; and

• Seven new compressor stations (6 of which would be located on existing oil pump stations sites—3 sites in California; 2 sites in Arizona; 1 site in Utah; and 1 site in New Mexico).

The proposed project would be capable of transporting up to 80 to 90 million cubic feet per day of natural gas (MMcfd) to customers east of California and at least 120 MMcfd to customers in southern California.

The FEIS/R will be used in the regulatory decision-making process at the FERC and CSLC, and may be presented as evidentiary material in formal hearings at the FERC and CSLC. While the period for filing interventions in these cases have expired, motions to intervene out of time can be filed with the FERC in accordance with the Commission's Rules and Practice and Procedures, 18 Code of Federal Regulations (CFR) 385.214(d). Further, anyone desiring to file a protest with the FERC should do so in accordance with 18 CFR 385.211.

The CSLC will consider certification of the FEIR and approval following FERC's action. California recipients of this document will receive separate notice for the CSLC meeting.

The FEIS/R has been placed in the public files of the FERC and CSLC and is available for public inspection at:

Federal Energy Regulatory Commission, Public Reference and Files Maintenance Branch, 888 First Street, NE, Room 2A, Washington, DC 20426, (202) 208–1371

California State Lands Commission, 100 Howe Avenue, Suite 100–South, Sacramento, CA 95825–8202, (916) 574–1889

Copies also are available for reading at the following locations:

Library	Address	City	Zip code
CALIFORNIA			
Canyon Hills Library	400 Scout Trail	Anaheim	92807
Euclid Branch Library	1340 S. Euclid St	Anaheim	92804
Banning Public Library	21 W. Nicholet St	Banning	92220
Beaumont District Library	125 E. 8th St	Beaumont	92223
Cabazon Library	50171 Ramona Ave	Cabazon	92230
Corona Library	650 South Main	Corona	91720
Cyress Library	5331 Orange Ave	Cypress	90630
Joshua Tree Branch Library	6465 Park Blvd	Joshua Tree	92252
Angelo M Iacaboni Library	4990 Clark Ave	Lakewood	90712
George Nye, Jr. Library	6600 Del Amo Blvd	Lakewood	90713
Dominguez Library	2719 E. Carson St	Long Beach	90810
Taft Library	740 E. Taft Ave	Orange	92665
Yucca Valley Branch Library	57098 29 Palms Hwy	Yucca Valley	92284
ARIZONA			
Mohave County Library	3269 N. Burbank	Kingman	86401
Kayenta Unified School #27		Kayenta	86033
UTAH			
San Juan County Library	25 West 300 South	Blanding	84511
NEW MEXICO			
Farmington Public Library	100 West Broadway	Farmington	87401
Bloomfield Public Library	333 South First	Bloomfield	87413

A limited number of copies are available from the FERC's Public Reference and Files Maintenance Branch identified above. In addition, the FEIS/R has been mailed to Federal, state, and local agencies; public interest groups; individuals who have requested the FEIS/R; libraries; newspapers; and parties to this proceeding.

In accordance with the Council on Environmental Quality's (CEQ) regulations implementing the National Environmental Policy Act, no agency decision on a proposed action may be made until 30 days after the U.S. Environmental Protection Agency publishes a notice of availability of the FEIS. However, the CEQ regulations provide an exception to this rule when an agency decision is subject to a formal internal appeal process which allows other agencies or the public to make their views known. In such cases, the agency decision may be made at the same time the notice of the FEIS is published, allowing both periods to run concurrently. The Commission decision for this proposed action is subject to a 30-day rehearing period.

Additional information about the proposed project is available from Daniel Gorfain at the CSLC ((916) 574–1889)); Paul McKee in the FERC's Office of External Affairs ((202) 208–1088)); or on the FERC website (www.ferc.fed.us) using the ''RIMS'' link to information in this docket number. For assistance with access to RIMS, the RIMS help line can be reached at (202) 208–2222. Access to the texts of formal documents issued by the FERC with regard to this docket, such as orders and notices, is also available on the FERC website using the ''CIPS'' link. For assistance with access to CIPS, the CIPS help line can be reached at (202) 208–2474.

Paul D. Thayer, Executive Officer, California State Lands Commission.

David P. Boergers.

Secretary, Federal Energy Regulatory Commission.

[FR Doc. 00–18966 Filed 7–26–00; 8:45 am]

BILLING CODE 6717–01–M

DEPARTMENT OF ENERGY

Federal Energy Regulatory Commission

Notice of Application to Amend License, and Soliciting Comments, Motions To Intervene, and Protests

July 24, 2000.

Take notice that the following hydroelectric application has been filed with the Commission and is available for public inspection:

a. *Application Type:* Request for Approval to replace turbines on two of the project's main generating units.

b. *Project No.:* 459–109.

c. *Date Filed:* June 08, 2000.

d. *Applicant:* Union Electric Company.

e. *Name of Project:* Osage Project.

f. *Location:* The Project is located on the Osage River in Benton, Camden, Miller, and Morgan Counties, Missouri. The project utilizes federal lands.

g. *Filed Pursuant to:* Federal Power Act, 16 U.S.C. 791(a)–825(r).

h. *Applicant Contact:* Mr. Dan E. Jarvis, Manager, Osage Project, AmerenUE, One American Plaza, 1901 Chouteau Avenue, P.O. Box 66149, St. Louis, MO 63166–6149. Tel: (573) 365–9322.

i. *FERC Contact:* Any questions on this notice should be addressed to Mr. Mohamad Fayyad at (202) 219–2665 or by e-mail at Mohamad.fayyad@ferc.fed.us.

j. *Deadline for filing comments and/or motions:* September 1, 2000.

Please include the project number (P–459–109) on any comments or motions filed.

All documents (original and eight copies) should be filed with: David P. Boergers, Secretary, Federal Energy Regulatory Commission, 888 First Street, NE., Washington, DC 20426.

k. *Description of Filing:* Union Electric Company (Union) filed a letter proposing to replace turbines on two of the Osage Project's eight main generating units. Union states that the new turbines will be more efficient and will better utilize the resource potential of the Osage River. According to Union, it will not exceed the project's current maximum hydraulic discharge rate or downstream flows.

l. *Location of the Application:* A copy of the application is available for inspection and reproduction at the Commission's Public Reference Room, located at 888 First Street, NE, Room 2A, Washington, DC 20426, or by calling (202) 208–1371. This filing may be viewed on http://www.ferc.fed.us/online/rims.htm [call (202) 208–2222 for assistance]. A copy is also available for inspection and reproduction at the address in item h above.

m. Individuals desiring to be included on the Commission's mailing list should so indicate by writing the Secretary of the Commission.

Comments, Protests, or Motions to Intervene—Anyone may submit comments, a protest, or a motion to intervene in accordance with the requirements of Rules of Practice and Procedure, 18 CFR 385.210, 385.211, 385.214. In determining the appropriate action to take, the Commission will consider all protests or other comments filed, but only those who file a motion to intervene in accordance with the Commission's Rules may become a party to the proceeding. Any comments, protests, or motions to intervene must be received on or before the specified comment date for the particular application.

Filing and Service of Responsive Documents—Any filings must bear in all capital letters the title ''COMMENTS'', ''RECOMMENDATIONS FOR TERMS AND CONDITIONS'', ''PROTEST'', or ''MOTION TO INTERVENE'', as applicable, and the Project Number of the particular application to which the filing refers. Any of the above-named documents must be filed by providing the original and the number of copies provided by the Commission's regulations to: The Secretary, Federal Energy Regulatory Commission, 888 First Street, NE., Washington, DC 20426. A copy of any motion to intervene must also be served upon each representative of the Applicant specified in the particular application.

Agency Comments—Federal, state, and local agencies are invited to file comments on the described application. A copy of the application may be obtained by agencies directly from the Applicant. If an agency does not file comments within the time specified for filing comments, it will be presumed to have no comments. One copy of an agency's comments must also be sent to the Applicant's representatives.

David P. Boergers,

Secretary.

[FR Doc. 00–18981 Filed 7–26–00; 8:45 am]

BILLING CODE 6717–01–M

DEPARTMENT OF ENERGY

Federal Energy Regulatory Commission

Notice of Application To Amend License, and Soliciting Comments, Motions To Intervene, and Protests

July 24, 2000

Take notice that the following hydroelectric application has been filed with the Commission and is available for public inspection:

a. *Application Type:* Application to amend the license.

b. *Project No:* P–10228–014.

c. *Date Filed:* April 7, 2000.

d. *Applicant:* Cannelton Hydroelectric Project, L.P.

e. *Name of Project:* Cannelton Hydroelectric Project.

f. *Location:* The Project would be located at the existing U.S. Army Corps of Engineers' Cannelton Locks and Dam on the Ohio River in Hancock County, Kentucky. The project utilizes federal lands.

g. *Filed Pursuant to:* Federal Power Act, 16 U.S.C. § 791(a)–825(r).

h. *Applicant Contact:* Canneton Hydroelectric Project, L.P., 120 Calumet Court, Aiken S.C. 29803. Tel: (803) 642–2749.

i. *FERC Contact:* Any questions on this notice should be addressed to Mr. Mohamad Fayyad at (202) 219–2665 or by e-mail at Mohamad.fayyad@ferc.fed.us.

j. *Deadline for filing comments and/or motions:* September 1, 2000.

Please include the project number (P–10228–014) on any comments or motions filed.

All documents (original and eight copies) should be filed with: David P. Boergers, Secretary, Federal Energy Regulatory Commission, 888 First Street, NE., Washington, DC 20426.

k. *Description of Filing:* Cannelton Hydroelectric Project, L.P., (Cannelton) proposes to change (a) the number of units authorized from 240 to 140, (b) total authorized capacity from 79.2 to 79.8 MW, and (c) extend the deadline for project completion. Cannelton states that the project's hydraulic capacity will remain at 55,200 cfs.

l. *Location of the Application:* A copy of the application is available for inspection and reproduction at the Commission's Public Reference Room, located at 888 First Street, NE., Room 2A, Washington, DC 20426, or by calling (202) 208–1371. This filing may be viewed on http://www.ferc.fed.us/online/rims.htm [call (202) 208–2222 for assistance]. A copy is also available for inspection and reproduction at the address in item h above.

m. Individuals desiring to be included on the Commissions's mailing list should so indicate by writing to the Secretary of the Commission.

Comments, Protests, or Motions to Intervene—Anyone may submit comments, a protest, or a motion to intervene in accordance with the requirements of Rules of Practice and Procedure, 18 CFR 385.210, 385.211, 385.214. In determining the appropriate action to take, the Commission will consider all protests or other comments filed, but only those who file a motion to intervene in accordance with the Commission's Rules may become a party to the proceeding. Any comments, protests, or motions to intervene must be received on or before the specified comment date for the particular application.

Filing and Service of Responsive Documents—Any filings must bear in all capital letters the title ''COMMENTS'', ''RECOMMENDATIONS FOR TERMS AND CONDITIONS'', ''PROTEST'', OR ''MOTION TO INTERVENE'', as applicable, and the Project Number of the particular application to which the filing refers. Any of the above-named documents must be filed by providing the original and the number of copies provided by the Commission's regulations to: The Secretary, Federal Energy Regulatory Commission, 888 First Street, NE., Washington, DC 20426. A copy of any motion to intervene must also be served upon each representative of the Applicant specified in the particular application.

Agency Comments—Federal, state, and local agencies are invited to file comments on the described application. A copy of the application may be obtained by agencies directly from the Applicant. If an agency does not file comments within the time specified for filing comments, it will be presumed to have no comments. One copy of an agency's comments must also be sent to the Applicant's representatives.

David P. Boergers,

Secretary.

[FR Doc. 00–18982 Filed 7–26–00; 8:45 am]

BILLING CODE 6717–01–M

DEPARTMENT OF ENERGY

Federal Energy Regulatory Commission

Notice of Request for Extension of Time To Commence and Complete Project Construction and Soliciting Comments, Motions To Intervene, and Protests

July 24, 2000.

Take notice that the following hydroelectric application has been filed with the Commission and is available for public inspection:

a. *Type of Application:* Request for Extension of Time.

b. *Project No:* 10455–017.

c. *Date Filed:* June 7, 2000.

d. *Applicant:* JDJ Energy Company.

e. *Name of Project:* River Mountain Pumped Storage Project.

f. *Location:* The project is located on the Arkansas River in Logan County, near Dardanelle, Arkansas. The project utilizes federal lands on the shoreline of Lake Dardanelle.

g. *Pursuant to:* Public Law 105–283, 112 Stat. 2100.

h. *Applicant Contact:* Donald H. Clarke, Esquire, Wilkinson, Barker, Knauer & Quinn, LLP, 2300 N Street, NW., Suite 700, Washington, DC 20037–1128, (202) 783–4141.

i. *FERC Contact:* Any questions on this notice should be addressed to Mr. Lynn R. Miles, Sr. at (202) 219–2671, or e-mail address: *lynn.miles@ferc.fed.us.*

j. *Deadline for filing comments and or motions:* September 1, 2000.

All documents (original and eight copies) should be filed with: David P. Boergers, Secretary, Federal Energy Regulatory Commission, 888 First Street, NW., Washington DC 20426.

Please include the project number (10455–017) on any comments or motions filed.

k. *Description of Request:* The licensee requests a two-year extension of time to commence and complete construction of the River Mountain Pump Storage Project. The licensee states that it needs additional time because of the additional design work and engineering necessitated by recent design modifications to the project features as authorized by the Commission's Order Amending License and Approving Exhibits issued March 16, 2000. This would be the licensee's second two-year extension of the three authorized by Public Law No. 105–283, 112 Stat. 2100.

l. *Locations of the Application:* A copy of the application is available for inspection and reproduction at the Commission's Public Reference Room, located at 888 First Street, NE, Room 2A, Washington, DC 20426, or by calling (202) 208–1371. This filing may be viewed on http:www.ferc.fed.us/online/rims.htm (call (202) 208–2222 for assistance). A copy is also available for inspection and reproduction at the address in item h above.

m. Individuals desiring to be included on the Commission's mailing list should so indicate by writing to the Secretary of the Commission.

Comments, Protests, or Motions to Intervene—Anyone may submit comments, a protest, or a motion to intervene in accordance with the requirements of Rules of Practice and Procedure, 18 CFR 385.210, 385.211, 385.214. In determining the appropriate action to take, the Commission will consider all protests or other comments filed, but only those who file a motion to intervene in accordance with the Commission's Rules may become a party to the proceeding. Any comments, protests, or motions to intervene must be received on or before the specified comment date for the particular application.

Filing and Service of Responsive Documents—Any filings must bear in all capital letters the title ''COMMENTS'', ''RECOMMENDATIONS FOR TERMS AND CONDITIONS'', ''PROTEST'', OR ''MOTION TO INTERVENE'', as applicable, and the Project Number of the particular application to which the filing refers. Any of the above-named documents must be filed by providing the original and the number of copies provided by the Commission's regulations to: The Secretary, Federal Energy Regulatory Commission, 888 First Street, NE., Washington, DC 20426. A copy of any motion to intervene must also be served upon each representative of the Applicant specified in the particular application.

Agency Comments—Federal, state, and local agencies are invited to file comments on the described application. A copy of the application may be obtained by agencies directly from the Applicant. If an agency does not file comments within the time specified for filing comments, it will be presumed to have no comments. One copy of an agency's comments must also be sent to the Applicant's representatives.

David P. Boergers,

Secretary.

[FR Doc. 00–18983 Filed 7–26–00; 8:45 am]

BILLING CODE 6717–01–M

ENVIRONMENTAL PROTECTION AGENCY

[FRL–6842–3]

Science Advisory Board; Notification of Public Advisory Committee Meetings

Pursuant to the Federal Advisory Committee Act, Public Law 92–463, notice is hereby given that the Environmental Engineering Committee (EEC), and its Subcommittee, of the USEPA Science Advisory Board (SAB) will hold two meetings on the dates and times noted below. All times noted are Eastern Daylight Time. All meetings are open to the public, however, seating is limited and available on a first come basis. *Important Notice:* Documents that are the subject of SAB reviews are normally available from the originating EPA office and are not available from the SAB Office—information concerning availability of documents from the relevant Program Office is included below.

1. Natural Attenuation Research Subcommittee—August 14–15, 2000

The Natural Attenuation Research Subcommittee of the Science Advisory Board's (SAB) Environmental Engineering Committee (EEC) will meet from 8:30 am Monday, August 14, 2000 until 3:30 pm Tuesday, August 15, 2000. The meeting will be held in Conference Room AR 6530, USEPA, Ariel Rios Building North, 1200 Pennsylvania Avenue, NW, Washington, DC 20004. The Ariel Rios Building is adjacent to the escalator to the Federal Triangle Metro Station on 12th Street NW.

Purpose of the Meeting—The purpose of this meeting is to complete the Subcommittee's review of EPA's natural attenuation research. This activity began at the January 26 conference call meeting. A preliminary non-consensus draft based on the Subcommittee members individual written comments will be available at the meeting.

Availability of Review Materials: The review materials were announced in previous notices (see 65 FR 1866–1867, January 12, 2000). A limited number of paper copies of these documents can be obtained from Dr. Stephen Schmelling at e-mail: *schmelling.steve@epa.gov* or via phone at (580) 436–8540.

2. Environmental Engineering Committee Teleconference—September 20, 2000

The Science Advisory Board's Environmental Engineering Committee will meet via teleconference from 3:00 to 5:00 pm Wednesday August 20, 2000. The public is encouraged to attend telephonically. To do so, please contact Ms. Mary Winston at least a week prior to the teleconference at (202) 564–4538, or via e-mail at *winston.mary@epa.gov.*

Purpose of the Meeting: The Committee plans to review Subcommittee reports, including that of the Natural Attenuation Research Subcommittee, consider future activities, and develop and agenda for its next face-to-face meeting, tentatively planned for December 5–7, 2000.

Availability of Materials: Materials discussed on the conference call will be available in advance. For these materials, please contact Ms. Mary Winston approximately a week before the teleconference at (202) 564–4538, or via e-mail at *winston.mary@epa.gov.*

For Further Information: Any member of the public wishing further information concerning either meeting or wishing to submit brief oral comments must contact Ms. Kathleen White Conway, Designated Federal Officer, Science Advisory Board (1400A), U.S. Environmental Protection Agency, Ariel Rios Building, 1200 Pennsylvania Avenue, NW, Washington, DC 20460; telephone (202) 564–4559; FAX (202) 501–0582; or via e-mail at *conway.katheen@epa.gov.* Requests for oral comments must be *in writing* (e-mail, fax or mail) and received by Ms. Conway no later than noon Eastern Time one week prior to each meeting.

Providing Oral or Written Comments at SAB Meetings

It is the policy of the Science Advisory Board to accept written public comments of any length, and to accommodate oral public comments whenever possible. The Science Advisory Board expects that public statements presented at its meetings will not be repetitive of previously submitted oral or written statements. *Oral Comments*: In general, each individual or group requesting an oral presentation at a face-to-face meeting will be limited to a total time of ten minutes. For teleconference meetings, opportunities for oral comment will usually be limited to no more than three minutes per speaker and no more than fifteen minutes total. Deadlines for getting on the public speaker list for a meeting are given above. Speakers should bring at least 35 copies of their comments and presentation slides for distribution to the reviewers and public at the meeting. *Written Comments*: Although the SAB accepts written comments until the date of the meeting (unless otherwise stated), written comments should be received in the SAB Staff Office at least one week prior to the meeting date so that the comments may be made available to the committee for their consideration. Comments should be supplied to the appropriate DFO at the address/contact information noted above in the following formats: one hard copy with original signature, and one electronic copy via e-mail (acceptable file format: WordPerfect, Word, or Rich Text files (in IBM–PC/Windows 95/98 format). Those providing written comments and who attend the meeting are also asked to bring 25 copies of their comments for public distribution.

General Information—Additional information concerning the Science Advisory Board, its structure, function, and composition, may be found on the SAB Website *(http://www.epa.gov/sab)* and in The FY1999 Annual Report of the Staff Director which is available from the SAB Publications Staff at (202) 564–4533 or via fax at (202) 501–0256. Committee rosters, draft Agendas and meeting calendars are also located on our website.

Meeting Access—Individuals requiring special accommodation at this meeting, including wheelchair access to the conference room, should contact Ms. Conway at least five business days prior to the meeting so that appropriate arrangements can be made.

Dated: July 18, 2000.

John R. Fowle,

Acting Staff Director, Science Advisory Board.

[FR Doc. 00–19011 Filed 7–26–00; 8:45 am]

BILLING CODE 6560–50–P

ENVIRONMENTAL PROTECTION AGENCY

[FRL–6842–1]

Regulatory Reinvention (XLC) Pilot Projects

AGENCY: Environmental Protection Agency (EPA).

ACTION: Notice of availability of City of Columbus, Ohio Project XL for Communities (XLC) Draft Final Project Agreement and Safe Drinking Water Act (SDWA) Draft Variance.

SUMMARY: EPA is today requesting comments on a draft Project XLC Final Project Agreement (FPA) and draft SDWA Variance for the City of Columbus, OH. The FPA is a voluntary agreement developed by the City of Columbus and the State of Ohio Department of Health, the Ohio Environmental Protection Agency, project stakeholders, and U.S. EPA. The SDWA Variance would be the federal legal mechanism used to provide regulatory flexibility to the City of

Columbus in the event of a Lead Action Level (LAL) exceedence under the Lead and Copper Rule (LCR). The SDWA Variance would not be effective and the City of Columbus would not be considered to be operating under a SDWA Variance unless and until the City exceeded the LAL.

DATES: The period for submission of comments ends on August 28, 2000.

ADDRESSES: All comments on the draft Final Project Agreement and draft SDWA Variance should be sent to: Miguel Del Toral, Water Division, WD–15J, US EPA Region 5, 77 West Jackson Boulevard, Chicago, IL 60604–3507, or Kristina Heinemann, U.S. EPA, 1200 Pennsylvania Avenue, NW., Mail Code 1802, Washington, DC 20460. Comments may also be faxed to Mr. Del Toral at (312) 886–6171 or Ms. Heinemann at (202) 260–7875. Comments will also be received via electronic mail sent to: deltoral.miguel@epa.gov or heinemann.kristina@epa.gov.

FOR FURTHER INFORMATION CONTACT: To obtain a copy of the draft Final Project Agreement or draft SDWA Variance, contact: Miguel Del Toral Water Division, WD–15J, U.S. EPA Region 5, 77 West Jackson Boulevard, Chicago, IL 60604–3507, or Kristina Heinemann, U.S. EPA, 1200 Pennsylvania Avenue, N.W., Mail Code 1802, Washington, DC 20460. The documents are also available via the Internet at the following location: ''http://www.epa.gov/ProjectXL''. In addition, public files on the Project are located at U.S. EPA Region 5 in Chicago, IL. Questions to EPA regarding the documents can be directed to Miguel Del Toral at (312) 886–5253 or Kristina Heinemann at (202) 260–5355. Additional information on Project XL and XLC, including documents referenced in this notice, other EPA policy documents related to Project XL and XLC, application information, and descriptions of existing XL and XLC projects and proposals, is available via the Internet at ''http://www.epa.gov/ProjectXL''.

SUPPLEMENTARY INFORMATION: Project XLC, announced in the **Federal Register** on November 1, 1995 (60 FR 55569), gives regulated sources the flexibility to develop alternative strategies that will replace or modify specific regulatory requirements on the condition that they produce greater environmental benefits.

In the past, the City of Columbus made certain changes to the method it uses to treat drinking water. Inadvertently, the treatment change caused an increase in the level of lead in the drinking water. Under the Federal and State drinking water regulations, if the lead levels rise above the limit established by U.S. EPA and OEPA, the Lead Action Level, the City must begin sampling lead service lines (LSL) immediately and replacing those lines that contribute high levels of lead. See 40 CFR 141.84 and Ohio Administrative Code Rule 3745–81–84.

If implemented, the draft FPA would carry out an XLC project in the City of Columbus to test a potentially more effective means of addressing health concerns from lead through a program run by the Columbus Departments of Health and Trade and Development, the Lead Safe Columbus Program (LSCP), in addition to closer coordination on drinking water treatment issues. Through this Agreement, the US EPA would suspend the LSL sampling and replacement provisions for up to three years beginning if and when the City exceeds the lead limit, provided this occurs within six years of making a drinking water treatment change. In exchange for this regulatory flexibility, the Columbus Division of Water proposes to contribute $300,000 a year for 15 years to the LSCP.

The LSCP provides free blood testing, public education, medical intervention for lead-poisoned children, and grants and loans for lead abatement to residents of Columbus in high-risk areas. The LSCP targets an area consisting of twenty-five high-risk census tracts within ten zip codes in older, predominantly low-income, minority neighborhoods in Columbus, where 84% of all elevated blood lead levels in the City were found.

Under the Safe Drinking Water Act, 42 U.S.C. 300f–300j–26, EPA promulgates national primary drinking water regulations (NPDWRs) which specify for certain drinking water contaminants either a maximum level or treatment technique with which public water systems must comply. EPA has promulgated a NPDWR for lead and copper that consists of a treatment technique requiring public water systems to take various steps to ensure that users of public water systems are not exposed to levels of lead and copper in drinking water that would result in adverse health effects.

The State of Ohio has primary enforcement responsibility for administering the Lead and Copper Rule (LCR) because it has adopted regulations that are at least as stringent as the federal regulation. The State regulation currently applies to the City of Columbus's public water system. The federal government however has the authority to grant a variance under section 1415(a)(3) of the SDWA, 42 U.S.C. 300g–4 and believes that a variance would be the appropriate legal mechanism for this XLC project.

U.S. EPA has determined that the Columbus XLC Project has merit, and believes that a SDWA variance would be the appropriate legal mechanism for providing the City of Columbus the regulatory flexibility the City has requested through Project XLC.

The SDWA Variance, which will become effective only if the City of Columbus actually experiences a Lead AL exceedence, will provide the City with a temporary suspension of the LSL sampling and replacement requirements while it makes water treatment modifications. EPA has tentatively determined that the City's approach of enhanced coordination under the Lead and Copper Rule will be at least as efficient in lowering the level of lead delivered to users of the public water system as the current regulation. In addition the LSCP would provide additional public health benefits by providing free blood testing, public education, medical intervention for lead poisoned children, and grants and loans for lead abatement to residents of Columbus in high risk areas.

Dated: July 21, 2000.

Christopher Knopes,

Acting Director, Office of Environmental Policy Innovation.

[FR Doc. 00–19012 Filed 7–26–00; 8:45 am]

BILLING CODE 6560–50–P

ENVIRONMENTAL PROTECTION AGENCY

[OW–FRL–6841–7]

Nutrient Criteria Development; Notice of Nutrient Criteria Technical Guidance Manual: Rivers and Streams

AGENCY: Environmental Protection Agency (EPA).

ACTION: Notice of nutrient criteria technical guidance manual: rivers and streams.

SUMMARY: The Environmental Protection Agency announces the availability of a nutrient criteria technical guidance manual for Rivers and Streams. This document provides State and Tribal water quality managers and others with guidance on how to develop numeric nutrient criteria for Rivers and Streams. This document does not contain site-specific numeric nutrient criteria for any river or stream systems. This guidance was principally developed to assist States and Tribes in their efforts to establish nutrient criteria. States and Tribes are clearly in the best position to consider site-specific conditions in

developing nutrient criteria. While this guidance contains EPA's scientific recommendations regarding defensible approaches for developing regional nutrient criteria, this guidance is not regulation; thus it does not impose legally binding requirements on EPA, States, Territories, Tribes, or the public, and might not apply to a particular situation based upon the circumstances. States, Territories, and authorized Tribes retain the discretion to adopt, where appropriate, other scientifically defensible approaches for developing regional or local nutrient criteria that differ from these recommendations.

We have decided to issue technical guidance in a manner similar to that which we are using to issue new and revised criteria (see **Federal Register**, December 10, 1998, 63 FR 68354 and in the EPA document titled, National Recommended Water Quality—Correction EPA 822–Z–99–001, April 1999). Therefore, we invite the public to provide scientific views on this guidance. We will review and consider information submitted by the public on significant scientific issues that might not have otherwise been identified by the Agency during development of this guidance. This guidance has been through external peer review, and a summary of these comments is available on the Nutrient website (http://www.EPA.gov/OST/standards/nutrient.html). After review of the submitted significant scientific information, the Agency will publish a revised document, or publish a notice indicating its decision not to revise the document.

This document has been prepared for publication by the Office of Science and Technology, Office of Water, U.S. Environmental Protection Agency. Mention of trade names or commercial products does not constitute endorsement or recommendation for use.

DATES: All significant scientific information must be submitted by September 25, 2000. Any scientific information submitted should be adequately documented and contain enough supporting information to indicate that acceptable and scientifically defensible procedures were used and that the results are likely reliable.

ADDRESSES: This notice contains a summary of the Nutrient Criteria Technical Guidance Manual: Rivers and Streams. Copies of the complete document may be obtained from EPA's Water Resource Center by phone at 202–260–7786, or by e-mail to: center.water-resource@epa.gov, or by conventional mail to EPA Water Resource Center, RC–4100, Ariel Rios Building, 1200 Pennsylvania Ave., NW, Washington, DC 20460. The document is also available electronically at: http://www.epa.gov/OST/standards/nutrient.html.

An original and two copies of written significant scientific information should sent to Robert Cantilli (MC–4304), U.S. EPA, Ariel Rios Building, 1200 Pennsylvania Ave., NW., Washington, DC 20460. Written significant scientific information may be submitted electronically in ASCII or Word Perfect 5.1, 5.2, 6.1, or 8.0 formats to OW-General@epa.gov.

FOR FURTHER INFORMATION CONTACT: Debra Hart, USEPA, Health and Ecological Criteria Division (4304), Office of Science and Technology, Ariel Rios Building, 1200 Pennsylvania Ave., NW, Washington, DC 20460; or call (202) 260–0905; fax (202) 260–1036; or e-mail hart.debra@epa.gov.

SUPPLEMENTARY INFORMATION:

Introduction

On March 24, 1998, the President's Clean Water Action Plan was presented in the **Federal Register**. The Clean Water Action Plan specifically stated that EPA will establish recommended water quality criteria for nutrients that reflect the different types of water bodies and different ecoregions of the country and that will assist States and Tribes in adopting numeric water quality standards for nutrients. Consistent with the objectives of the Clean Water Action Plan, the U.S. Environmental Protection Agency presented a National Strategy for the Development of Regional Nutrient Criteria on June 25, 1998. The Strategy described the approach the Agency would follow in developing nutrient information and working with States and Tribes to adopt nutrient criteria as part of State/Tribal water quality standards. The major focus of the strategy is the development of waterbody-type technical guidance and recommended ecoregion-specific nutrient criteria by the year 2000. Once EPA develops waterbody-type guidance and recommended nutrient criteria, EPA intends to assist States and Tribes in adopting numeric nutrient criteria into water quality standards by the end of 2003.

Overview of the Problem

Cultural eutrophication (*i.e.,* that associated with humans) of United States surface waters is a long-standing problem; approximately half of the reported impairments in National waters are attributable to excess nutrients. Nitrogen and phosphorus are the primary cause of eutrophication, and algal blooms are often a response to enrichment. Within Rivers and Streams, chronic symptoms of overenrichment include low dissolved oxygen, fish kills, increased sediment accumulation, and species and abundance shifts of flora and fauna. The problem is National in scope, but varies in nature from one region of the country to another due to geographical variations in geology and soil types. For these reasons, EPA has decided to develop its recommend nutrient criteria on an ecoregional basis for use by States and Tribes.

Summary of Nutrient Criteria Technical Guidance Manual for Rivers and Streams

EPA initiated the National Strategy to Develop Regional Nutrient Criteria to address enrichment problems. The Nutrient Criteria Technical Guidance Manual: Rivers and Streams is the second of a series of waterbody-type specific manuals produced to assist EPA Regions, States, and Tribes in establishing ecoregionally appropriate nutrient criteria. EPA is also developing manuals for estuarine/coastal waters and wetlands. EPA expects States and Tribes to use these manuals as the basis for developing State water quality standards for nutrients, to help identify water quality impairments, and to evaluate the relative success in reducing cultural eutrophication. In addition to developing these waterbody-type specific manuals, EPA is developing nutrient criteria guidance under section 304(a) for each of the 14 ecoregions it has identified in the continental United States. EPA expects States and Tribes to use the manuals, other information, and local expertise to refine EPA's 304(a) nutrient criteria guidance so that the nutrient water quality criteria eventually adopted by States and Tribes are tailored to more localized conditions. In order to assist States and Tribes in this undertaking, as well as to verify section 304 (a) nutrient criteria guidance, and to provide national consistency wherever possible, EPA has established Regional Technical Assistance Groups (RTAGs). RTAGs are a collection of EPA, other Federal agencies, State, and Tribal representatives who are working together to use EPA's forthcoming section 304(a) nutrient criteria guidance as a starting point for developing more refined ecoregional nutrient criteria. (EPA is also using data and expertise provided by the RTAGs in the development of its section 304(a) nutrient criteria guidance for the 14

ecoregions it has identified.) Today's manual for Rivers and Streams also explains how States or Tribes can adopt nutrient water quality standards based on the ecoregional criteria values recommended by the EPA and/or RTAGs.

A directly prescriptive approach to nutrient criteria development is not appropriate due to regional differences that exist and the lack of a clear technical understanding of the relationship between nutrients, algal growth, and other factors (*e.g.,* flow, light, substrata). Therefore, the approach chosen for criteria development must be tailored to meet the specific needs of each State or Tribe. The criteria development process described in this guidance can be divided into the following iterative steps.

1. Identify water quality needs and goals with regard to managing nutrient enrichment problems.

2. Classify rivers and streams first by type, and then by trophic status.

3. Select variables for monitoring nutrients, algae, macrophytes, and their impacts.

4. Design sampling program for monitoring nutrients and algal biomass in rivers and streams.

5. Collect data and build database.

6. Analyze data.

7. Develop criteria based on reference condition and data analyses.

8. Implement nutrient control strategies.

9. Monitor effectiveness of nutrient control strategies and reassess the validity of nutrient criteria.

The components of each step are explained in detail in succeeding chapters of the document. Appended to the guidance document are case studies from various ecoregions around the country and technical discussions of analytical methods, statistical analyses, and computer modeling.

The Nutrient Criteria Technical Guidance Document: Rivers and Streams that is being announced in this Notice was developed after consideration of public comment and peer review. The draft technical guidance manual for Rivers and Streams was placed on the EPA Nutrient website (http://www.EPA.gov/OST/standards/nutrient.html) on October 8, 1999, and EPA accepted correspondences and comments until June 23, 2000. In addition, a peer review of the proposed criteria document was conducted by a panel of five external reviewers.

Dated: July 20, 2000.

Jeanette Wiltse,

Acting Director, Office of Science and Technology.

[FR Doc. 00–19014 Filed 7–26–00; 8:45 am]

BILLING CODE 6560–50–P

ENVIRONMENTAL PROTECTION AGENCY

[FRL–6841–8]

Proposed CERCLA Prospective Purchaser Agreement for the Copley Square Plaza Superfund Site

AGENCY: Environmental Protection Agency (EPA).

ACTION: Notice; proposal of CERCLA prospective purchaser agreement for the Copley Square Plaza superfund site.

SUMMARY: In accordance with the Comprehensive Environmental Response, Compensation, and Liability Act of 1980 (CERCLA), 42 U.S.C. 9601 *et seq.*, as amended by the Superfund Amendments and Reauthorization Act of 1986 (SARA), Public Law 99–499, notice is hereby given that a proposed prospective purchaser agreement (PPA) for the Copley Square Plaza Superfund Site (Site) located in Copley, Ohio, has been executed by Knights Runners Club Association. The proposed PPA has been submitted to the Attorney General for approval. The proposed PPA would resolve certain potential claims of the United States under sections 106 and 107 of CERCLA, 42 U.S.C. 9606 and 9607, against Knights Runners Club Association. The proposed PPA will reimburse the United States for just under 50% of its outstanding response costs incurred at the Site. The Site is not on the National Priorities List.

DATES: Comments on the proposed PPA must be received by August 28, 2000.

ADDRESSES: A copy of the proposed PPA is available for review at U.S. EPA, Region 5, 77 West Jackson Boulevard, Chicago, Illinois 60604. Please contact Kathleen Schnieders at (312) 353–8912, prior to visiting the Region 5 office.

Comments on the proposed PPA should be addressed to Kathleen Schnieders, Office of Regional Counsel, U.S. EPA, Region 5, 77 West Jackson Boulevard (Mail Code C–14J), Chicago, Illinois 60604.

FOR FURTHER INFORMATION CONTACT: Kathleen Schnieders at (312) 353–8912, of the U.S. EPA Region 5 Office of Regional Counsel.

A 30-day period, commencing on the date of publication of this notice, is open for comments on the proposed PPA. Comments should be sent to the addressee identified in this notice.

William E. Muno,

Director, Superfund Division, Region 5.

[FR Doc. 00–19009 Filed 7–26–00; 8:45 am]

BILLING CODE 6560–50–M

FEDERAL COMMUNICATIONS COMMISSION

Notice of Public Information Collection(s) Being Reviewed by the Federal Communications Commission

July 14, 2000.

SUMMARY: The Federal Communications Commission, as part of its continuing effort to reduce paperwork burden invites the general public and other Federal agencies to take this opportunity to comment on the following information collection(s), as required by the Paperwork Reduction Act of 1995, Public Law 104–13. An agency may not conduct or sponsor a collection of information unless it displays a currently valid control number. No person shall be subject to any penalty for failing to comply with a collection of information subject to the Paperwork Reduction Act (PRA) that does not display a valid control number. Comments are requested concerning (a) whether the proposed collection of information is necessary for the proper performance of the functions of the Commission, including whether the information shall have practical utility; (b) the accuracy of the Commission's burden estimate; (c) ways to enhance the quality, utility, and clarity of the information collected; and (d) ways to minimize the burden of the collection of information on the respondents, including the use of automated collection techniques or other forms of information technology.

DATES: Written comments should be submitted on or before August 28, 2000. If you anticipate that you will be submitting comments, but find it difficult to do so within the period of time allowed by this notice, you should advise the contact listed below as soon as possible.

ADDRESSES: Direct all comments to Judy Boley, Federal Communications Commission, Room 1–C804, 445 12th Street, SW, DC 20554 or via the Internet to jboley@fcc.gov.

FOR FURTHER INFORMATION CONTACT: For additional information or copies of the information collection(s), contact Judy Boley at 202–418–0214 or via the Internet at jboley@fcc.gov.

SUPPLEMENTARY INFORMATION: *OMB Control No.:* 3060–XXXX.

Title: Interstate Telephone Service Provider Worksheet.

Form No.: FCC Form 159–W.

Type of Review: New collection.

Respondents: Individuals or households, business or other for-profit, not-for-profit institutions, state, local or tribal government.

Number of Respondents: 4,500.

Estimated Time Per Response: .25 hours or 15 minutes.

Frequency of Response: On occasion and annual reporting requirement.

Total Annual Burden: 1,125 hours.

Total Annual Cost: N/A.

Needs and Uses: Section 9 authorizes the Federal Communications Commission to assess and collect annual regulatory fees to recover costs incurred in carrying out its enforcement, policy and rulemaking activities and its user information services. Common carrier licensees and permittees who provide interstate telephone operator services must pay those fees. These regulatory fees are based upon a percentage of the carrier's interstate revenues. The information is necessary to determine how much each carrier's interstate revenues are available to the carrier by extraction from another voluminous collection approved under OMB Control Number 3060–0855, Telecommunications Reporting Worksheet, FCC Form 499–A. The requested FCC Form 159–W is intended to provide a convenient format for documenting the extracted interstate revenue information and to complete the simple calculation of the fee amount due.

OMB Control No.: 3060–XXXX.

Title: Section 101.1327, Renewal Expectancy for EA Licensees.

Form No.: N/A.

Type of Review: New collection.

Respondents: Business or other for-profit.

Number of Respondents: 18,820.

Estimated Time Per Response: .20 hours.

Frequency of Response: Every 10 year reporting requirement.

Total Annual Burden: 284,653 hours.

Total Annual Cost: $18,820,000.

Needs and Uses: The information required in Section 101.1327 is used to determine whether a renewal applicant of a Multiple Address System has complied with the requirements to provide substantial service by the end of the ten-year initial license term. The FCC uses the information to determine whether an applicant's license will be renewed at the end of the license period.

Federal Communications Commission.

Magalie Roman Salas,

Secretary.

[FR Doc. 00–18957 Filed 7–26–00; 8:45 am]

BILLING CODE 6712–01–P

FEDERAL DEPOSIT INSURANCE CORPORATION

Sunshine Act Meeting

Pursuant to the provisions of the ''Government in the Sunshine Act'' (5 U.S.C. 552b), notice is hereby given that at 10:30 a.m. on Thursday, July 27, 2000, the Federal Deposit Insurance Corporation's Board of Directors will meet in closed session, pursuant to sections 552b(c)(2), (c)(4), (c)(6), (c)(8), (c)(9)(A)(ii), and (c)(10) of Title 5, United States Code, to consider matters relating to the Corporation's supervisory and corporate activities.

The meeting will be held in the Board Room on the sixth floor of the FDIC Building located at 550 17th Street, NW., Washington, DC.

Requests for further information concerning the meeting may be directed to Mr. Robert E. Feldman, Executive Secretary of the Corporation, at (202) 898–6757.

Dated: July 25, 2000.

Federal Deposit Insurance Corporation.

James D. LaPierre,

Deputy Executive Secretary.

[FR Doc. 00–19095 Filed 7–25–00; 11:15 am]

BILLING CODE 6714–01–M

DEPARTMENT OF THE INTERIOR

Fish and Wildlife Service

Notice of Receipt of Applications for Permit

Endangered Species

The following applicants have applied for a permit to conduct certain activities with endangered species. This notice is provided pursuant to section 10(c) of the Endangered Species Act of 1973, *as amended* (16 U.S.C. 1531, *et seq.*):

PRT–018316

Applicant: Smithsonian National Museum of Natural History, Washington, DC.

The applicant requests a permit to import a specimen of Cahow (*Pterodroma cahow*) found dead in the wild from natural causes, for the purpose of scientific research.

PRT–030276

Applicant: Eckerd College, St. Petersburg, FL.

The applicant requests a permit to import tissue and blood samples obtained from wild Hawksbill Sea Turtle (*Eretmochelys imbricata*) from the Cayman Islands Department of Environment, for the purpose of scientific research.

PRT–844694

Applicant: National Marine Fisheries Service, Southwest Fisheries Science Center, La Jolla, CA.

The applicant requests a permit to Re-Export samples obtained from Leatherback Sea Turtle (*Dermochelys coriacea*) and Hawksbill Sea Turtle (*Eretmochelys imbricata*) for the purpose of enhancement of scientific research.

PRT–030747

Applicant: Donald P. Wilson, Stoneham, MA.

The applicant requests a permit to import the sport-hunted trophy of one male bontebok (*Damaliscus pygargus dorcas*) culled from a captive herd maintained under the management program of the Republic of South Africa, for the purpose of enhancement of the survival of the species.

Marine Mammal

The public is invited to comment on the following application for a permit to conduct certain activities with marine mammals. The application was submitted to satisfy requirements of the Marine Mammal Protection Act of 1972, *as amended* (16 U.S.C. 1361 *et seq.*) and the regulations governing marine mammals (50 CFR 18).

PRT–030691

Applicant: Jerry W. Peterman, Dallas, TX.

The applicant requests a permit to import a polar bear (*Ursus maritimus*) sport-hunted from the Northern Beaufort Sea polar bear population, Northwest Territories, Canada for personal use.

Documents and other information submitted with these applications are available for review, *subject to the requirements of the Privacy Act and Freedom of Information Act,* by any party who submits a written request for a copy of such documents to the following office within 30 days of the date of publication of this notice: U.S. Fish and Wildlife Service, Office of Management Authority, 4401 North Fairfax Drive, Room 700, Arlington, Virginia 22203. Phone: (703/358–2104); FAX: (703/358–2281).

Dated: July 21, 2000.

Kristen Nelson,

Chief, Branch of Permits, Office of Management Authority.

[FR Doc. 00–18974 Filed 7–26–00; 8:45 am]

BILLING CODE 4310–55–U

DEPARTMENT OF THE INTERIOR

Fish and Wildlife Service

Notice of Availability of Draft Environmental Impact Statement for the Establishment of the Little Darby National Wildlife Refuge in Madison and Union Counties, West Central Ohio

AGENCY: Fish and Wildlife Service, Interior.

ACTION: Notice of availability for public comment.

SUMMARY: The U.S. Fish and Wildlife Service (Service) has prepared a Draft Environmental Impact Statement (DEIS) which is available for public review. The DEIS analyzes the potential environmental impacts that may result if a national wildlife refuge is established in the Little Darby watershed. The analysis provided in the DEIS is intended to accomplish the following: inform the public of the proposed action and alternatives; address public comment received during the scoping period; disclose the direct, indirect, and cumulative environmental effects of the proposed actions and each of the alternatives; and indicate any irreversible commitment of resources that would result from implementation of the proposed action. The Service invites the public to comment on the DEIS. All comments received from individuals become part of the official public record. Requests for such comments will be handled in accordance with the Freedom of Information Act and the Council on Environmental Quality's National Environmental Policy Act regulations [40 CFR 1506.6(f)]. Our practice is to make comments available for public review during regular business hours. Individual respondents may request that we withhold their home address from the record, which we will honor to the extent allowable by law. If a respondent wishes us to withhold his/her name and/or address, this must be stated prominently at the beginning of the comment.

The DEIS evaluates the establishment of the Little Darby National Wildlife Refuge as a means of working with individuals, groups, and governmental entities to permanently preserve and restore a significant segment of the Little Darby Creek subwatershed, its aquatic resources, threatened and endangered species, migratory birds and the historic grassland, wetland and oak savanna habitats that they depend upon. Five alternatives, including a No Action alternative are being considered. The four action alternatives are aimed at permanently protecting and enhancing a major corridor segment of the Little Darby Creek, and associated grassland, wetland and riparian habitats.

The Service's preferred alternative (Alternative 2) is to permanently protect, enhance and restore riparian areas, grasslands and wetlands that were historically present within the framework of a Voluntary Purchase Area and to protect a larger part of the subwatershed identified as a Watershed Conservation Area through the use of voluntary non-development easements which will perpetuate the current land use and encourage conservation land use practices. The use of partnerships, incentives, education, and cooperative agreements will be used and considered in addition to the acquisition of easements and fee title interests. Any conservation easements, or acquisition of full title would be done by the Service and Service Partners which may include state agencies and private organizations. Service acquisition of easements and fee interest in lands would be on a voluntary basis from willing sellers.

DATES: Written comments on the DEIS must be received on or before September 28, 2000. A Final Environmental Impact Statement will then be prepared and provided to the public for review.

ADDRESSES: Individuals wishing copies of this DEIS for review should contact: William Hegge, Darby Creek Watershed Project Manager, U.S. Fish and Wildlife Service, 6950–H Americana Parkway, Reynoldsburg, Ohio 43068 or Thomas Larson, Chief of Ascertainment and Planning, National Wildlife Refuge System, BHW Federal Building, 1 Federal Drive, Fort Snelling, Minnesota 55111. The DEIS is also available on the Internet at http://www.fws.gov/r3pao/planning/top.htm and at the Ohio libraries listed below:

Hilliard Branch, Columbus Metropolitan Libraries
Dublin Branch, Columbus Metropolitan Libraries
Main Branch, Columbus Metropolitan Libraries
Northwest Branch, Columbus Metropolitan Libraries
London Branch, Madison County Libraries
Plain City Branch, Madison County Libraries
West Jefferson Branch, Madison County Libraries
Marysville Branch, Union County Libraries
Richwood Branch, Union County Libraries
Urbana Branch, Champaign County Libraries
St. Paris Branch, Champaign County Libraries
Mechanicsburg Branch, Champaign County Libraries
Springfield Branch, Clark County Libraries
Hurt/Battelle Memorial Library, West Jefferson

FOR FURTHER INFORMATION CONTACT: William Hegge or Thomas Larson at the addresses listed above or by telephone at 614/ 469–6923 x17 and 800/247–1247 respectively.

Public Hearing

A public hearing will be held in Ohio during the comment period to solicit oral comments from the public. The date and location of this hearing will be announced through the local news media.

SUPPLEMENTARY INFORMATION: On June 9, 2000, a notice was published in the **Federal Register** (65 F.R. 36711) announcing that the Service intended to prepare an Environmental Impact Statement addressing the possible Federal action of establishing a refuge on the Little Darby watershed in Madison and Union counties, Ohio, and inviting comments on the scope of the Environmental Impact Statement. Comments were received and considered and are reflected in the DEIS made available for comment through this notice.

America's native grasslands are a vanishing ecosystem, and mounting evidence indicates that many species dependent upon grasslands are also declining. Few other ecosystem types have experienced as great a degree of loss and alteration. The population trend in Ohio for grassland nongame migratory birds exhibits declines much greater than the declines reported nationally. Ohio has also lost more than 90 percent of its presettlement wetlands through conversion. An estimated 50 percent of Ohio's waterways are impaired by agricultural runoff and hydro-modification. This project could preserve and restore grassland and wetland habitats and play a major role in long term preservation of the diverse Little Darby Creek aquatic system.

Through an integrated and novel ecosystem approach, the Service, with its partners, proposes to protect and restore fish and wildlife habitats, overall

biodiversity and compatible land uses in the project area through holistic management strategies using a wide variety of tools and techniques. The Service proposes to participate in public and private partnerships at many levels, complementing and expanding upon local projects such as those of the Soil and Water Conservation Districts, Ohio Department of Natural Resources, U.S. Department of Agriculture, Ohio Department of Agriculture, The Nature Conservancy, and others.

This notice is provided pursuant to Fish and Wildlife Service regulations for implementing the National Environmental Policy Act of 1969 (40 CFR 1506.6).

Dated: July 21, 2000.

Marvin E. Moriarty,

Acting Regional Director.

[FR Doc. 00–18975 Filed 7–26–00; 8:45 am]

BILLING CODE 4310–55–P

DEPARTMENT OF THE INTERIOR

Fish and Wildlife Service

Notice of Intent To Prepare a Supplement to a Final Environmental Impact Statement Pertaining to the Translocation of Southern Sea Otters

AGENCY: Fish and Wildlife Service, Interior.

ACTION: Notice of intent (NOI) to prepare a supplement to a final environmental impact statement.

SUMMARY: Pursuant to the National Environmental Policy Act, 40 CFR 1502.9(c)(1)(ii) this NOI advises the public that we, the U.S. Fish and Wildlife Service (Service), intend to prepare a draft and final Supplemental Environmental Impact Statement (Supplement) (EIS) pertaining to the translocation of southern sea otters.

From 1984 through May of 1987, we drafted and finalized an EIS which analyzed the impacts of establishing a program to translocate southern sea otters from their then current range along the central coast of California to areas of northern California, southern Oregon, or San Nicolas Island off the coast of southern California. We implemented the translocation program and moved southern sea otters from the coast of central California to San Nicolas Island starting in August 1987 and ending in March 1990. As part of the translocation program, up until 1993, we removed or attempted to remove otters (containment) from a special management zone established under the translocation program. The special management zone is located off the coast of southern California, from Point Conception south to Mexico, and includes the channel islands, exclusive of San Nicolas Island and the surrounding translocation zone. The purpose of this containment component of the translocation program was to prevent, to the maximum extent feasible, conflict between sea otters and other fishery resources within the management zone and to facilitate the management of sea otters at San Nicolas Island. Over the past several years, significant new circumstances have arisen that bear on the translocation program and, in particular, on the containment component of the program. In addition, we have acquired significant new information relevant to environmental concerns for southern sea otters.

In response to these significant new circumstances and new information, we are reevaluating the present southern sea otter translocation program and propose to modify the program consistent with the recovery needs of the species. This NOI serves to describe several alternative modifications to the program as well as termination of the program, invites public participation in the scoping process for preparing the EIS, and identifies the Fish and Wildlife Service official to whom questions and comments concerning the proposed action may be directed. Throughout the scoping process, the public, environmental groups, industries, Federal and State agencies, local governments, and other interested parties will have the opportunity to assist us in determining the scope of the Draft Supplement, significant issues that should be addressed, and alternatives to be considered.

DATE: Written comments regarding scoping for the Draft Supplement should be received by September 29, 2000. See **SUPPLEMENTARY INFORMATION** section for meeting dates.

ADDRESSES: Address all comments concerning this notice to U.S. Fish and Wildlife Service, Ventura Field Office, Attention Mr. Greg Sanders, 2493 Portola Road, Suite B, Ventura, California, 93003–7726, (telephone: 805/644–1766; facsimile: 805/644–3958). Submit electronic comments to *fw1ottereis@r1.fws.gov*. See **SUPPLEMENTARY INFORMATION** section for file formats and other information about electronic filing.

FOR FURTHER INFORMATION CONTACT: Mr. Greg Sanders, U.S. Fish and Wildlife Service, at the above Ventura address.

SUPPLEMENTARY INFORMATION:

Background

In 1977, we listed the southern sea otter *(Enhydra lutris nereis)* as a threatened species under the Endangered Species Act (ESA) after consideration of its small population size, greatly reduced range, and the potential risk from oil spills. We approved a recovery plan for the species in 1982. At the time the recovery plan was being developed, available information suggested the sea otter population was not growing, and there was concern the population was in decline. In response, we determined that translocating sea otters was an effective and reasonable recovery action, although there was some concern that a translocated sea otter population could impact shellfish fisheries that had developed in areas formerly occupied by sea otters. Goals cited in the recovery plan included: minimizing risk from potential oil spills; establishing at least one additional breeding colony outside the then current sea otter range; and compiling and evaluating information on historic distribution and abundance, available but unoccupied habitat, and potential fishery conflicts to help identify optimum distribution, abundance, and productivity. The idea of translocation was not new as several prior efforts to reestablish sea otter populations via translocation had been successful. We developed a southern sea otter translocation plan in 1986.

In concept, the purpose of translocation was to establish sea otters in one or more areas outside the then current range to minimize the possibility of a single natural or human-caused catastrophe, such as an oil spill, adversely affecting a significant portion of the population. Ultimately, it was anticipated that translocation would result in a larger population size and a more continuous distribution of animals throughout the southern sea otter's former historic range. Translocation was viewed as important to achieving recovery, and for identifying the optimal sustainable population (OSP) level for the southern sea otter as required under the Marine Mammal Protection Act (MMPA).

Translocation of a listed species is generally authorized under the Endangered Species Act, and under certain specific circumstances, translocation of a listed species to establish experimental populations is authorized under section 10(j) of the ESA. The sea otter, however, is protected by both the ESA and the MMPA, and prior to the amendments of 1988, there were no similar translocation provisions under the

MMPA. For sea otters, this dilemma was resolved in 1986 with the passage of Public Law (PL) 99–625 providing for the translocation of southern sea otters.

When it was signed into law in 1986, PL 99–625 specifically authorized, and established guidelines for, the translocation of southern sea otters. Special regulations implementing the law at 50 CFR 17.84(d) provide details of the translocation plan, including five criteria for determining whether the translocation program is a failure. Under the regulations, prior to declaring the translocation a failure, we must conduct a full evaluation of the program and the probable causes of failure, and consult with both the Marine Mammal Commission and the California Department of Fish and Game (CDFG). If the causes for program failure can be determined, and legal and reasonable remedial measures can be identified and implemented to eliminate the causes of failure, the regulations state that consideration will be given to continuing to maintain the translocated sea otter population. If the causes of the failure cannot be identified and remedied, we will publish the results of the failure evaluation in the **Federal Register**, amend the regulations to terminate the translocation program, and remove all otters from San Nicolas Island and the management zone.

In August 1987, the Service and CDFG agreed to a Memorandum of Understanding providing for cooperative research and management efforts to promote recovery of southern sea otters. The agreement also included provisions to minimize conflicts with existing shellfish fisheries and other marine resources through containment of sea otters. In 1997, CDFG notified us that they would no longer be able to assist with containment of sea otters in the management zone.

A primary purpose of the translocation program was to establish a colony of sea otters at a location outside the then existing parent range to enhance recovery and provide protection against the possibility of a natural or human-caused event, such as an oil spill, adversely affecting a significant portion of the sea otter population. Contrary to expectations and to the primary recovery objective of the sea otter management program, San Nicolas Island has not produced a second, independent colony of sea otters sufficiently removed from the parent population so as to be shielded from the effects of a major oil spill or other catastrophic incident. As demonstrated by the size of the 1989 Exxon Valdez oil spill, the impacts of a major oil tanker accident could encompass both the parent range of the sea otter and the translocation zone surrounding San Nicolas Island. In addition, the experimental population at San Nicolas Island has not grown into an established independent colony, as defined by the translocation program, despite the original translocation of 140 otters. The translocation program states that a minimum number of 150 otters at San Nicolas Island is necessary to be considered an established population that would be available to repopulate areas in the event of a major loss of the parent population from an oil spill or other catastrophic event. Since the translocation of otters to San Nicolas Island, the island population has never exceeded 23 otters. Given its very small size, the experimental population is not contributing significantly to recovery of the species and is not a viable source for repopulating the parent population in the event of a major oil spill or similar incident. In addition, the small size of the experimental population prevents many of the secondary research objectives of the translocation plan from being met.

Proposed Action

We propose to reevaluate the present southern sea otter translocation program as described in the Final EIS for Translocation of Southern Sea Otters, Appendix B, May 1987, and modify the program consistent with the recovery needs of the species. The purpose of this action is to assess the impacts of alternatives and reduce the southern sea otter's vulnerability to extinction.

New Information and Changed Circumstances

The Supplement will review and assess new information and changed circumstances pertaining to translocation of the southern sea otter. New information and changed circumstances include but are not limited to:

(1) The January 2000 Draft Revised Recovery Plan

The number of southern sea otters counted during spring surveys has declined over four of the past 5 years and the population continues to be vulnerable to extinction. The Recovery Team now recommends against additional translocations to accomplish the objective of increasing the range and number of southern sea otters in California. There is reason to believe that range expansion of sea otters will occur more rapidly if the existing population is allowed to passively recover than it would under a recovery program that includes translocating sea otters.

(2) Results of the Translocation Program on Sea Otters and Sea Otter Population Recovery

The translocation of sea otters to San Nicolas Island has been much less successful than expected. After nearly 13 years of experience with the sea otter translocation program, the San Nicolas Island colony population remains very small (fewer than 21 independent animals). Even if the translocation program is allowed to continue and it eventually succeeds, it will be many more years before the sea otter population at the island reaches the population target of 150 animals and will be able to serve the recovery objectives identified in the translocation plan.

(3) Mass Movement of Sea Otters

A large number of sea otters from the parent population temporarily moved into the northern end of the management zone in 1998 and reappeared in 1999 and 2000. The animals were not translocated to the area, and this movement appears to represent a natural extension of their range.

(4) Results of Containment Efforts and Sea Otter Population Recovery

Capturing southern sea otters through non-lethal means, as required by PL 99–625, has proven in most cases to be more difficult than we anticipated when developing the translocation program. From 1987 to 1993, we responded to sightings of southern sea otters in the management zone. However, we were often unable to find reported individuals. When otters were detected, efforts to capture even a few otters were time consuming and often unsuccessful. In addition, several otters died shortly after capture and release into the parent population, leading to concerns that containment may ultimately result in the death of some otters removed from the management zone. The containment program anticipated that the Fish and Wildlife Service and the CDFG would jointly manage an effort to locate and remove sea otters in the management zone. The recent mass movements of sea otters from the parent range to the management zone renders containment even more difficult because CDFG is no longer able to participate in containment efforts.

(5) Sea Otter Socialization and Interactions With Introduced Individuals

We have concluded, in a recent biological opinion evaluating the effects of sea otter containment under the translocation plan, that the movement of large numbers of southern sea otters from the management zone into the parent range would likely cause substantial disruption of the latter's social structure and increased pressure on food resources and, consequently, result in jeopardy to the listed species. Such impacts could include increased mortality and population instability, which would likely continue, if not accelerate, the recent decline in the parent population.

(6) Parent Population Decline

In 4 of the past 5 years (1996, 1997, 1998, and 1999) the total number of southern sea otters counted during spring population surveys has progressively declined. In spring 1995, the number of sea otters was the highest number recorded to date; a total of 2,377 animals was counted. In the spring of 1996, the number fell to 2,278. By the spring of 1997, it was down to 2,229, in spring 1998 a total of 2,114 animals were counted, and the 1999 spring count observed only 2,090 sea otters. This represents a decline of just under 12 percent between 1995 and 1999. The spring 2000 survey counted a total of 2,317 otters (2,053 independents plus 264 pups). This represents nearly an 11 percent increase since 1999, but is still below the highest count of 2,377 obtained in the spring 1995 survey. The most recent spring survey results are encouraging; however, year to year variation in the counts is expected. For this reason the southern sea otter recovery team has recommended the use of a 3-year running average to incorporate the existing degree of uncertainty in assessing population counts. The spring 2000 count represents an increase in both the annual counts and the 3-year running average and may indicate a reversal in the downward trend observed since 1995. However, the information from the spring 2000 is not sufficient evidence that the recent decline in the southern sea otter population is reversed. Survey data from future years will be needed to determine if the population counts continue to increase and demonstrate an upward trend.

Alternatives

The Supplement will evaluate new information and changed circumstances in order to determine the environmental impact (beneficial or adverse) which would result from a number of possible sea otter management alternatives, as compared to the current Federal Action (implementation of a translocation program). The Supplement will compare alternative scenarios against the current management program (No Action Alternative). Some of these alternatives may require new legislation.

Alternatives may include but are not limited to the following:

(1) The Action Alternative

This alternative would continue the translocation program without additional evaluation of failure or modification of the management zone. Removal of sea otters from the management zone would resume if changed circumstances or new information indicated that containment would not result in jeopardy to the listed species.

(2) Complete the Evaluation of Failure Criteria for the Translocation Program and Proceed With Actions Identified in the Translocation Plan and Implementing Regulations

According to the regulations implementing PL 99–625 at 50 CFR 17.84(d)(8), the translocation program would generally be considered to have failed if one or more of five criteria are met. We would complete our evaluation and assessment of the translocation program using these criteria. If the translocation program were determined to be a failure after the evaluation, we would remove the experimental population of sea otters from San Nicolas Island, provided that we conclude that removal of the island population and its return to the parent population could be accomplished without jeopardizing the listed species. Similarly, if circumstances changed or new information indicated that containment of sea otters in the management zone would not result in jeopardy to the listed species, we would make reasonable efforts to remove all sea otters remaining in the management zone and return them to the parent population. The management zone would then be eliminated.

(3) Complete the Evaluation of Failure Criteria for the Translocation Program But Do Not Remove Sea Otters From San Nicolas Island or the Management Zone

We would complete the evaluation and assessment of the translocation program using the failure criteria. If determined to be a failure after the evaluation, we would initiate a proposed rulemaking to change the existing regulations at 50 CFR 17.84(d)(8) to eliminate the management zone and allow sea otters to remain at San Nicolas Island and in the management zone.

(4) Modify the Boundaries of the Management Zone

We would initiate a proposed rulemaking to change the existing regulations at 50 CFR 17.84(d)(8) to re-delineate boundaries of the management zone. Containment of sea otters would resume within the new boundaries of the management zone if changed circumstances or new information indicated that containment would not result in jeopardy to the listed species.

(5) Modify Lobster, Crab, and Live Fin-Fish Trapping at San Nicolas Island To Avoid any Reasonable Possibility of Take of Sea Otters in Traps

We would pursue a change in State regulations to address gear modifications and/or fishing restrictions at San Nicolas Island. Containment of sea otters within the management zone would resume if changed circumstances or new information indicated that containment would not result in jeopardy to the listed species.

Public Comments Solicited

The environmental review of the proposed action will be conducted in accordance with the requirements of the National Environmental Policy Act of 1969, as amended (42 U.S.C. 4321 *et seq.*), National Environmental Policy Act Regulations at 40 CFR 1500–1508, other appropriate Federal laws and regulations, and policies and procedures of the Fish and Wildlife Service for compliance with those regulations. This notice is being furnished in accordance with section 1501.7 of the National Environmental Policy Act, to obtain suggestions and information from other agencies and the public on the scope of issues and alternatives to be addressed in the Supplement. We solicit comments and participation in this scoping process. Questions concerning the Draft Supplement and written scoping comments should be directed to U.S. Fish and Wildlife Service, Ventura Field Office, Attention Mr. Greg Sanders, 2493 Portola Road, Suite B, Ventura, California 93003–7726, (telephone: 805/644–1766; facsimile: 805/644–3958). Written comments regarding scoping for the Draft Supplement should be received by September 29, 2000, at the address above. You may also send comments by electronic mail (e-mail) to fw1ottereis@r1.fws.gov. Please submit comments in ASCII file format and

avoid the use of special characters and encryption. If you do not receive a confirmation from the system that your e-mail message has been received, contact us directly by calling our Ventura Fish and Wildlife Office at phone number 805/644–1766.

Meetings

Public scoping meetings will be held on the following dates:

1. August 15, 2000, 1 p.m. to 4 p.m. and 7 p.m. to 10 p.m., Santa Barbara, CA at the Radisson Hotel.

2. August 17, 2000, 1 p.m. to 4 p.m. and 7 p.m. to 10 p.m., Monterey, CA at the Monterey Conference Center.

Registration will begin 1 hour prior to each meeting session. There will be a presentation at the beginning of the public scoping meetings that will address background on the southern sea otter translocation program and significant new circumstances and information relevant to the status of the southern sea otter and the effects of the translocation program, including containment, on the southern sea otter. Submission of written and oral comments will be accepted at the scoping meetings.

The Draft Supplement is scheduled to be available to the public in the summer of 2001.

Dated: July 19, 2000.

John Engbring,

Acting Manager, California/Nevada Operations Office, Region 1, U.S. Fish and Wildlife Service.

[FR Doc. 00–18704 Filed 7–26–00; 8:45 am]

BILLING CODE 4310–55–P

DEPARTMENT OF THE INTERIOR

Bureau of Indian Affairs

Request to Office of Management and Budget for Reinstatement of Agency Information Collection for Indian Self-Determination and Education Assistance Contracts; Correction

AGENCY: Bureau of Indian Affairs, Interior.

ACTION: Notice; correction.

SUMMARY: The Bureau of Indian Affairs published a document in the **Federal Register** of June 29, 2000, concerning a submission to the Office of Management and Budget (OMB) of a request for reinstatement of OMB No. 1076–0136, ''Indian Self-Determination and Education Assistance Act Programs.'' This correction adds the following sentences that were omitted in the notice.

FOR FURTHER INFORMATION CONTACT: James Thomas, 202–208–5727.

Correction

In the **Federal Register** of June 29, 2000, in FR Doc. 00–16429, on page 40113, in the second column, add at the end of the second paragraph the following:

A notice requesting comments was published in the **Federal Register** on May 14, 1999 (64 FR 26427) and none were received.

On page 40113, in the third column, add at the end of the second paragraph the following:

Responses to this information collection are to obtain or retain a benefit.

Dated: July 21, 2000.

Kevin Gover,

Assistant Secretary—Indian Affairs.

[FR Doc. 00–18961 Filed 7–26–00; 8:45 am]

BILLING CODE 4310–02–P

DEPARTMENT OF THE INTERIOR

Bureau of Land Management

[AK–962–1410–HY–P]

Notice for Publication, F–14857–B; Alaska Native Claims Selection

In accordance with Departmental regulation 43 CFR 2650.7(d), notice is hereby given that a decision approving lands for conveyance under the provisions of Sec. 14(a) of the Alaska Native Claims Settlement Act of December 18, 1971, 43 U.S.C. 1613(a), will be issued to Gwitchyaazhee Corporation for approximately 80 acres. The lands involved are within T. 19 N., R. 12 E., Fairbanks Meridian, in the vicinity of Fort Yukon, Alaska.

Notice of the decision will be published once a week, for four (4) consecutive weeks, in the *Fairbanks Daily News-Miner.* Copies of the decision may be obtained by contacting the Alaska State Office of the Bureau of Land Management, 222 West Seventh Avenue, #13, Anchorage, Alaska 99513–7599, (907) 271–5960.

Any party claiming a property interest which is adversely affected by the decision, an agency of the Federal government, or regional corporation, shall have until August 28, 2000 to file an appeal. However, parties receiving service by certified mail shall have 30 days from the date of receipt to file an appeal. Appeals must be filed in the Bureau of Land Management at the address identified above, where the requirements for filing an appeal may be obtained. Parties who do not file an appeal in accordance with the requirements of 43 CFR part 4, Subpart E, shall be deemed to have waived their rights.

Stephanie Clusiau,

Land Law Examiner, Branch of ANCSA Adjudication.

[FR Doc. 00–18976 Filed 7–26–00; 8:45 am]

BILLING CODE 4310–$$–P

DEPARTMENT OF THE INTERIOR

Bureau of Land Management

[AK–962–1410–HY–P]

Notice for Publication, AA–6701–C; Alaska Native Claims Selection

In accordance with Departmental regulation 43 CFR 2650.7(d), notice is hereby given that a decision approving lands for conveyance under the provisions of Sec. 14(a) of the Alaska Native Claims Settlement Act of December 18, 1971, 43 U.S.C. 1613(a), will be issued to Seldovia Native Association, Inc., for 4.99 acres. The lands involved are within T. 8 S., R. 13 W., Seward Meridian, the vicinity of Seldovia, Alaska.

Notice of the decision will be published once a week, for four (4) consecutive weeks, in the *Anchorage Daily News.* Copies of the decision may be obtained by contacting the Alaska State Office of the Bureau of Land Management, 222 West Seventh Avenue, #13, Anchorage, Alaska 99513–7599 ((907) 271–5960).

Any party claiming a property interest which is adversely affected by the decision, an agency of the Federal government or regional corporation, shall have until August 28, 2000 to file an appeal. However, parties receiving service by certified mail shall have 30 days from the date of receipt to file an appeal. Appeals must be filed in the Bureau of Land Management at the address identified above, where the requirements for filing an appeal may be obtained. Parties who do not file an appeal in accordance with the requirements of 43 CFR part 4, Subpart E, shall be deemed to have waived their rights.

Sherri D. Belenski,

Land Law Examiner, Branch of ANCSA Adjudication.

[FR Doc. 00–18705 Filed 7–26–00; 8:45 am]

BILLING CODE 4310–$$–P

DEPARTMENT OF THE INTERIOR

Bureau of Land Management

[WY–920–09–1320–EL, WYW150970]

Coal Exploration License, WY

AGENCY: Bureau of Land Management, Interior.

ACTION: Notice of invitation for coal exploration license.

SUMMARY: Pursuant to section 2(b) of the Mineral Leasing Act of 1920, as amended by section 4 of the Federal Coal Leasing Amendments Act of 1976, 90 Stat. 1083, 30 U.S.A. 201(b), and to the regulations adopted as 43 CFR 3410, all interested parties are hereby invited to participate with Black Butte Coal Company on a pro rata cost sharing basis in its program for the exploration of coal deposits owned by the United States of America in the following-described lands in Sweetwater County, WY:

T. 17 N., R. 101 W., 6th P.M., Wyoming
Sec. 2: Lots 3 (NENW), 4 (NWNW), S2NW, SW;
Sec. 4: Lots 1–4 (N2N2), S2N2, S2;
Sec. 8: ALL;
Sec. 10: W2;
T. 18 N., R. 101 W., 6th P.M., Wyoming
Sec. 34: ALL.
Containing 2,559.480 acres, more or less.

All of the coal in the above-described land consists of unleased Federal coal within the Rock Springs Known Recoverable Coal Resource Area.

ADDRESSES: The proposed exploration program is fully described and will be conducted pursuant to an exploration plan to be approved by the BLM. Copies of the exploration plan are available for review during normal business hours in the following offices (serialized under number WYW150970): BLM, Wyoming State Office, 5353 Yellowstone Road, P.O. Box 1828, Cheyenne, WY 82003; and, BLM, Rock Springs Field Office, 280 Highway 191 North, Rock Springs, WY 82901.

SUPPLEMENTARY INFORMATION: This notice of invitation will be published in the ''Rocket-Miner'' of Rock Springs, WY, once each week for two consecutive weeks beginning the week of July 24, 2000, and in the **Federal Register**. Any party electing to participate in this exploration program must send written notice to both the Bureau of Land Management and Black Butte Coal Company no later than thirty days after publication of this invitation in the **Federal Register**. The written notice should be sent to the following addresses: Black Butte Coal Company, Attn: Pete Sall, P.O. Box 98, Point of Rocks, WY 82942, and the BLM, Wyoming State Office, Minerals and Lands Authorization Group, Attn: Julie Weaver, P.O. Box 1828, Cheyenne, WY 82003.

The foregoing is published in the **Federal Register** pursuant to 43 CFR 3410.2–1(c)(1).

Dated: July 17, 2000.

Pamela J. Lewis,

Chief, Leasable Minerals Section.

[FR Doc. 00–18487 Filed 7–26–00; 8:45 am]

BILLING CODE 4310–22–P

DEPARTMENT OF THE INTERIOR

Bureau of Land Management

[NV–910–0777XQ–241A]

Call for Nominations for Resource Advisory Council

AGENCY: Bureau of Land Management, Interior.

ACTION: Notice of Resource Advisory Council call for nominations.

SUMMARY: The purpose of this notice is to solicit public nominations for a vacancy on the Bureau of Land Management (BLM) Northeastern Great Basin Resource Advisory Council (RAC). The RAC provides advice and recommendations to the BLM on land use planning and management of the public lands within the geographic area, which includes southern Nevada. Public nominations will be accepted for 45 days after the publication date of this notice.

The Federal Land Policy and Management Act (FLPMA) directs the Secretary of the Interior to involve the public in planning and issues related to management of lands administered by BLM. Section 309 of FLPMA directs the Secretary to select 10 to 15 member citizen-based advisory councils that are established and authorized consistent with the requirements of the Federal Advisory Committee Act (FACA). As required by the FACA, the interests represented by the individuals appointed to the RAC must be balanced and representative of the various issues concerned with the management of the public lands. The current vacancy is within Category One (of three), which includes:

Representatives of energy and mineral development, holders of federal grazing permits and timber industry, transportation or rights-of-way, off-highway vehicle use, and commercial recreation. The vacancy which has occurred is the representative energy and mineral development.

Individuals may nominate themselves or others. Nominees must be residents of the State of Nevada, in which the RAC has jurisdiction. Nominees will be evaluated based on their education, training, experience, and their knowledge of the geographical area of the RAC. Nominees should have demonstrated a commitment to collaborative resource decision making. All nominations must be accompanied by letters of reference from represented interests or organizations, a completed background information nomination form, as well as any other information that speaks to the nominee's qualifications.

Simultaneous with this notice, the BLM Nevada State Office will issue a news release providing additional information for submitting nominations. Nominations for RAC membership should be sent to the BLM office as follows: Susan Howle, BLM Ely Field Office, 702 North Industrial Way, HC 33 Box 33500, Ely, NV 89301–9408.

FOR FURTHER INFORMATION CONTACT: Robert Stewart, Public Affairs Specialist, BLM Nevada State Office, P.O. Box 12000, Reno, Nevada 89520–006 or telephone (775) 861–6586.

Dated: July 14, 2000.

Robert E. Stewart,

Acting Chief, Office of Communications.

[FR Doc. 00–19024 Filed 7–26–00; 8:45 am]

BILLING CODE 4310–HC–M

DEPARTMENT OF THE INTERIOR

Bureau of Land Management

[AZ–060–00–1430–EU; AZA 29451]

Notice of Realty Action; Bureau Motion; Noncompetitive Sale of Public Land; Arizona

AGENCY: Bureau of Land Management, Interior.

ACTION: Notice.

SUMMARY: The following land has been found suitable for direct sale under section 203 of the Federal Land Policy and Management Act of 1976 (90 Stat. 2750, 43 USC 1713), at not less than the estimated fair market value of $25,400.00. In accordance with section 7 of the Taylor Grazing Act, 43 USC 315f, and Executive Order 6910, the land described below is hereby classified for disposal by sale. The land will not be offered for sale until at least 60 days after the date of this notice.

Gila and Salt River Meridian, Arizona

T. 18 S., R. 14 E.,
Sec. 19, lot 6.

The area described contains 0.1 acre.

The land described is hereby segregated from appropriation under the public land laws, including the mining laws, pending disposition of this action or 270 days from the date of publication of this notice, whichever occurs first.

This land is being offered by direct sale to Continental School District No. 39. It has been determined that the subject parcel contains no known mineral values; therefore, mineral interests may be conveyed simultaneously. Acceptance of the direct sale offer will qualify the purchaser to make application for conveyance of those mineral interests.

The patent, when issued will contain certain reservations to the United States and will be subject to an existing right-of-way. Detailed information concerning these reservations as well as specific conditions of the sale are available for review at the Tucson Field Office, Bureau of Land Management, 12661 East Broadway, Tucson, Arizona, 85748.

For a period of 45 days from the date of publication of this notice in the **Federal Register**, interested parties may submit comments to the Field Manager at the above address. In the absence of timely objections, this proposal shall become the final determination of the Department of the Interior.

Dated: July 5, 2000.

Bill Auby,

Acting Field Office Manager.

[FR Doc. 00–19023 Filed 7–26–00; 8:45 am]

BILLING CODE 4310–32–M

DEPARTMENT OF THE INTERIOR

Bureau of Land Management

[CO–110–1060–DC]

Wild Horse Removal; Colorado

AGENCY: White River Field Office, Bureau of Land Management, Department of the Interior.

ACTION: Rescinding decision for gather of wild horses on West Douglas Herd Area, Colorado;

SUMMARY: The Field Manager for the White River Field Office is rescinding the decision (CO–WRFO–00–133) to gather horses from the West Douglas Herd Area. Rescinding this decision is the result of a lack of funding for the operation. When funding is acquired the Gather plan/Environmental Assessment and a Record of Decision will be reissued.

FOR FURTHER INFORMATION CONTACT: Robert Fowler; White River Field Office; 73544 HWY 64, Meeker, Colorado, 81641; Telephone (970) 878–3601.

James A. Cagney,

White River Field Manager.

[FR Doc. 00–18128 Filed 7–26–00; 8:45 am]

BILLING CODE 4310–JB–M

DEPARTMENT OF THE INTERIOR

National Park Service

Golden Gate National Recreation Area and Point Reyes National Seashore Advisory Commission; Notice of Cancellation and Notice of Change of Meeting Dates

Notice is hereby given in accordance with the Federal Advisory Committee Act that the meeting of the Golden Gate National Recreation Area and Point Reyes National Seashore Advisory Commission previously scheduled for Tuesday, August 15, 2000 at Building 201, Fort Mason, Bay and Franklin Streets, San Francisco, California is cancelled. The Advisory Commission, however, will meet on Tuesday, August 29, 2000 at Building 201, Fort Mason, Bay and Franklin Streets, San Francisco, California.

Change of Meeting Dates

Beginning in September 2000, the Golden Gate National Recreation Area and Point Reyes National Seashore Advisory Commission will meet every fourth Tuesday of each month rather than every third Tuesday, as previously noticed in FR Doc. 99–32837, published December 20, 1999. The Advisory Commission will meet to hear presentations on issues related to management of the Golden Gate National Recreation Area and Point Reyes National Seashore. Meetings of the Advisory Commission are scheduled for the following dates at San Francisco, Marin County, or San Mateo County and at Point Reyes Station, California:

Tuesday, September 26, San Francisco, CA or Marin County, CA
Saturday, October 21, Point Reyes, CA
Tuesday, October 24, San Francisco, CA or Marin County, CA
Tuesday, November 28, San Francisco, CA or Marin County, CA
Tuesday, December 26, San Francisco, CA

Should the meeting scheduled for Tuesday, December 26, 2000 be cancelled, a notice of cancellation will be published in the **Federal Register**.

The Advisory Commission was established by Public Law 92–589 to provide for the free exchange of ideas between the National Park Service and the public and to facilitate the solicitation of advice or other counsel from members of the public on problems pertinent to the National Park Service systems in Marin, San Francisco and San Mateo Counties. Current members of the Commission are as follows:

Mr. Richard Bartke, Chairman
Ms. Amy Meyer, Vice Chair
Ms. Lennie Roberts
Dr. Edgar Wayburn
Mr. Michael Alexander
Mr. Gordon Bennett
Ms. Anna-Marie Booth
Ms. Yvonne Lee
Ms. Susan Giacomini Allan
Mr. Trent Orr
Mr. Redmond Kernan
Mr. Doug Nadeau
Ms. Betsey Cutler
Mr. Trent Orr
Mr. Dennis Rodoni
Mr. John J. Spring
Mr. Mel Lane

All meetings of the Advisory Commission will be held at 7:30 p.m. at GGNRA Park Headquarters, Building 201, Fort Mason, Bay and Franklin Streets, San Francisco, except the Saturday, October 21 meeting, which will be held at 10:30 a.m. at the Dance Palace, corner of 5th and B Streets, Point Reyes Station, California.

However, some meetings may be held at other locations in Marin County or possibly at locations in San Mateo County. Information confirming the time and location of all Advisory Commission meetings or cancellations of any meetings can be received by calling the Office of the Staff Assistant at (415) 561–4733.

These meetings will contain a Superintendent's Report, a Presidio General Manager's Report, and a Presidio Trust Director's Report.

Specific final agendas for these meetings will be made available to the public at least 15 days prior to each meeting and can be received by contacting the Office of the Staff Assistant, Golden Gate National Recreation Area, Building 201, Fort Mason, San Francisco, California 94123 or by calling (415) 561–4733.

These meetings are open to the public. They will be recorded for documentation and transcribed for dissemination. Minutes of the meetings will be available to the public after approval of the full Advisory Commission. A verbatim transcript will be available three weeks after each meeting. For copies of the minutes contact the Office of the Staff Assistant, Golden Gate National Recreation Area, Building 201, Fort Mason, San Francisco, California 94123.

Dated: July 20, 2000.

Brian O'Neill,

General Superintendent, Golden Gate National Recreation Area.

[FR Doc. 00–19016 Filed 7–26–00; 8:45 am]

BILLING CODE 4310–70–P

DEPARTMENT OF JUSTICE

Bureau of Prisons

Notice of Intent To Prepare a Draft Environmental Impact Statement for the Construction of Private Correctional Facilities in Florida, Georgia, and Mississippi

AGENCY: Bureau of Prisons, U.S. Department of Justice.

ACTION: Notice of intent to prepare a Draft Environmental Impact Statement (DEIS).

SUMMARY:

Proposed Action

The Bureau of Prisons (BOP) will prepare a DEIS for a Contractor-Owned and Contractor-Operated private correctional facility(ies) to house sentenced criminal aliens. The BOP is facing unprecedented growth in its inmate population. As a result, low security federal correctional institutions will be especially impacted. The projected growth in the population of sentenced criminal aliens will further exacerbate these low security population demands.

The BOP will be soliciting for a Contractor-Owned and Contractor-Operated correctional facility(ies) to house approximately 1,500 low security, male, non U.S. citizen criminal aliens. Proposed facility(ies) may include construction of a new facility, expansion of an existing facility, or use of an existing facility. Fourteen sites throughout Florida, Georgia and Mississippi have been identified by contractors and offered to the BOP for consideration. The proposed sites have been submitted by the following contractors:

Alternative Programs, Inc. (1) 160 acres of partially developed land located approximately eight miles south of the city limits of Lucedale, MS. Owned by the George County School District.

Correctional Corporation of America (CCA): (1) Tallahatchie County Correctional Facility, located north of the City of Tutwiler on U.S. Highway 49, Tutwiler, MS.; (2) Stewart Correctional Facility located two miles southeast of Lumpkin, GA. On County Road 99; (3) McRae Correctional Facility, Highway 23 southeast of McRae, GA.

Cornell Corrections: (1) 85 acres of primarily undeveloped and forested land, east of John E. Lewis Drive in McComb, MS.; (2) 347 acres of land south of Bucksnort Road, 6 miles west of Interstate Highway 75, Jackson, GA.; (3) 70 acre tract of land west of State Highway 252 (Burnt Fort Road), Folkston, GA.; (4) 495 acre tract of land, south of State Road 60 west of the State Road 676 intersection near Mulberry, FL.

Wackenhut Corrections Corporation: (1) 70 acres of vacant land, eastside of Dummy Line Road, west of U.S. Highway 49, Wiggins, MS.; (2) 50 acres on the southeast portion of General Portland Lafarge Cement Plant Site, intersection of North Kendall Drive and Krome Avenue, Kendall, FL.

Correctional Services Corporation: (1) 40 acres of land five miles from I–59 and 75–80 miles north, Poplarville, MS.; (2) 250 acres, Lumberton Industrial Park, Lumberton, MS.; (3) 65 acres of undeveloped land, Land Lot #14 of the 13th District of Clayton County, Forest Park, GA.

Greene County Board of Supervisors: (1) 90 acres of land owned by Greene County, adjacent to the State correctional facility, east of State Highway 63, three miles north-northwest of the city of Leakesville, MS.

Each proposed site submitted to the BOP is in response to the Commerce Business Daily Notice issued April 3rd. The notice required potential offerors to submit a Phase I environmental Survey conducted in accordance with the American Society for Testing and Materials, Standard Practice for Environmental Site Assessment Process. Also included as a ''non-scope consideration'' under Chapter 12 of the Standard Practice are a delineation or identification of on-site wetlands, and an analysis of potential impacts to threatened or endangered species, or species of special status. In further evaluation of these sites, several aspects will receive detailed examination including utilities, traffic patterns, noise, cultural resources, threatened and endangered species and land uses.

The BOP intends to award a firm-fixed price contract with award-fee incentives; a potential term of ten years consisting of a three-year base and seven one-year option periods; a performance-based statement of work based generally on the American Correctional Association Standards; and a management emphasis on contractor quality control. After publication of this notice, the BOP will issue a Request for Proposals (RFPs). Proposals may be offered for any or all of the 14 sites.

Alternatives

Alternatives will include the no action alternative, and all proposals received in response to the RFPs. Each alternative will be identified and fully examined. The DEIS will not contain a preferred alternative(s).

Scoping Process

Pursuant to the National Environmental Policy Act of 1969, as amended, (NEPA), a Scoping process will be conducted. As part of this process, public meetings will be held in Florida, Georgia, and Mississippi, to identify issues of concern for analysis during the NEPA process. Information packets containing a description of each site will be available during the meetings. Copies of the Phase I Environmental Site Assessments will be made available upon written request. During the preparation of the DEIS, there will be numerous opportunities for public involvement. The meetings, locations, dates and times will be well publicized in the local newspaper of record in the affected communities adjacent to the potential sites. Meetings will be held to allow interested persons to voice their concerns on the scope and significant issues to be examined as part of the NEPA process. The Scoping process is being held to provide for timely public comments and understanding of Federal plans and programs with possible environmental consequences as required by NEPA and the National Historic Preservation Act of 1966.

DEIS Preparation

Public notice will be given in the **Federal Register** and the local newspaper of record concerning the availability of the DEIS for public review and comment.

ADDRESSES: Questions concerning the proposed action and the DEIS may be directed to: David J. Dorworth, Chief, Site Selection and Environmental Review Branch, Federal Bureau of Prisons, 320 First Street, NW., Washington, DC 20534, Attention: Debra J. Hood, Telephone: 202–514–6470, Telefacsimile: 202–616–6024. E-mail: *siteselection@bop.gov*

Dated: July 21, 2000.

David J. Dorworth,

Chief, Site Selection and Environmental Review Branch.

[FR Doc. 00–18950 Filed 7–26–00; 8:45 am]

BILLING CODE 4410–5–P

DEPARTMENT OF LABOR

Office of the Secretary

Advisory Council on Employee Welfare and Pension Benefit Plans; Nominations for Vacancies

Section 512 of the Employee Retirement Income Security Act of 1974 (ERISA), 88 Stat. 895, 29 U.S.C. 1142, provides for the establishment of an ''Advisory Council on Employee Welfare and Pension Benefit Plans'' (the Council), which is to consist of 15 members to be appointed by the Secretary of Labor (the Secretary) as follows: Three representatives of employee organizations (at least one of whom shall be representative of an organization whose members are participants in a multi employer plan); three representatives of employers (at least one of whom shall be representative of employers maintaining or contributing to multi employer plans); one representative each from the fields of insurance, corporate trust, actuarial counseling, investment counseling, investment management and accounting; and three representatives from the general public (one of whom shall be a person representing those receiving benefits from a pension plan). No more than eight members of the Council shall be members of the same political party.

Members shall be persons qualified to appraise the programs instituted under ERISA. Appointments are for terms of three years. The prescribed duties of the Council are to advise the Secretary with respect to the carrying out of his or her functions under ERISA, and to submit to the Secretary, or his or her designee, recommendations with respect thereto. The Council will meet at least four times each year, and recommendations of the Council to the Secretary will be included in the Secretary's annual report to the Congress on ERISA.

The terms of five members of the Council expire on November 14, 2000. The groups or fields they represented are as follows: employee organizations, investment counseling, actuarial counseling, employers and the general public. The Department of Labor is committed to equal opportunity in the workplace and seeks a broad-based and diverse ERISA Advisory Council membership.

Accordingly, notice is hereby given that any person or organization desiring to recommend one or more individuals for appointment to the ERISA Advisory Council on Employee Welfare and Pension Benefit Plans to represent any of the groups or fields specified in the preceding paragraph, may submit recommendations to Sharon Morrissey, Executive Secretary, ERISA Advisory Council, Frances Perkins Building, U.S. Department of Labor, 200 Constitution Avenue, NW, Suite N–5677, Washington, DC 20210. Recommendations must be delivered or mailed on or before October 1, 2000. Recommendations may be in the form of a letter, resolution or petition, signed by the person making the recommendation or, in the case of a recommendation by an organization, by an authorized representative of the organization. Each recommendation should contain a detailed statement of the nominee's background.

Signed at Washington, D.C. this 21st day of July, 2000.

Leslie B. Kramerich,

Acting Assistant Secretary of Labor, Pension and Welfare Benefits Administration.

[FR Doc. 00–19000 Filed 7–26–00; 8:45 am]

BILLING CODE 4510–29–M

DEPARTMENT OF LABOR

Employment and Training Administration

Proposed Collection; Comment Request; Correction

AGENCY: Employment and Training Administration; USDOL.

ACTION: Correction.

SUMMARY: In notice document 00–18606 on page 45619 in the issue of Monday, July 24, 2000, make the following correction:

On page 45619 in the second column, under DATES: the phrase ''August 31, 2000'' should be changed to read ''September 22, 2000''.

Dated: July 24, 2000.

Richard C. Trigg,

National Director, Job Corps.

[FR Doc. 00–19001 Filed 7–26–00; 8:45 am]

BILLING CODE 4510–30–M

DEPARTMENT OF LABOR

Pension and Welfare Benefit Administration

Working Group on Phased Retirement; Advisory Council on Employee Welfare and Pension Benefits Plans; Notice of Meeting

Pursuant to the authority contained in section 512 of the Employee Retirement Income Security Act of 1974 (ERISA), 29 U.S.C. 1142, a public meeting will be held on Tuesday, August 15, 2000, of the Working Group on Phased Retirement of the Advisory Council on Employee Welfare and Pension Benefits Plans.

The purpose of the open meeting, which will run from 9:30 a.m. to approximately noon in Room N–5437 A–D, U.S. Department of Labor Building, Second and Constitution Avenue NW, Washington, DC 20210, is for working group members to explore legal and regulatory barriers to phased retirement.

Members of the public are encouraged go file a written statement pertaining to the topic by submitting 20 copies on or before August 7, 2000, to Sharon Morrissey, Executive Secretary, ERISA Advisory Council, U.S. Department of Labor, Room N–5677, 200 Constitution Avenue, NW, Washington, DC 20210. Individuals or representatives of organizations wishing to address the Working Group should forward their request to the Executive Secretary or telephone (202) 219–8753. Oral presentations will be limited to 10 minutes, but an extended statement may be submitted for the record. Individuals with disabilities, who need special accommodations, should contact Sharon Morrissey by August 7, at the address indicated in this notice.

Organizations or individuals also may submit statements for the record without testifying. Twenty (20) copies of such statements should be sent to the Executive Secretary of the Advisory Council at the above address. Papers will be accepted and included in the record of the meeting if received on or before August 7.

Signed at Washington, D.C. this 24th day of July 2000.

Leslie Kramerich,

Acting Assistant Secretary, Pension and Welfare Benefits Administration.

[FR Doc. 00–18997 Filed 7–26–00; 8:45 am]

BILLING CODE 4510–29–M

DEPARTMENT OF LABOR

Pension and Welfare Benefits Administration

Working Group on Long-Term Care, Advisory Council on Employee Welfare Benefits Plans; Notice of Meeting

Pursuant to the authority contained in section 512 of the Employee Retirement Income Security Act of 1974 (ERISA), 29 U.S.C. 1142, a public meeting will be held Monday, August 14, 2000, of the Advisory Council on Employee Welfare and Pension and Pension Benefit Plans Working Group studying long-term care.

The session will take place in Room N–5437 A–D, U.S. Department of Labor

Building, Second and Constitution Avenue, NW, Washington, DC 20210. The purpose of the open meeting, which will run from 1 p.m. to approximately 4 p.m., is for working group members to receive additional information with an emphasis on the perspective from the LTC provider industry and from the Federal government.

Members of the public are encouraged to file a written statement pertaining to the topic by submitting 20 copies on or before August 7, 2000, to Sharon Morrissey, Executive Secretary, ERISA Advisory Council, U.S. Department of Labor, Room N–5677, 200 Constitution Avenue, NW, Washington, DC 20210. Individuals or representatives of organizations wishing to address the Working Group should forward their request to the Executive Secretary or telephone (202) 219–8753. Oral presentations will be limited to 10 minutes, but an extended statement may be submitted for the record. Individuals with disabilities, who need special accommodations, should contact Sharon Morrissey by August 7, at the address indicated in this notice.

Organizations or individuals may also submit statements for the record without testifying. Twenty (20) copies of such statements should be sent to the Executive Secretary of the Advisory Council at the above address. Papers will be accepted and included in the record of the meeting if received on or before August 7.

Signed at Washington, D.C. this 21st day of July 2000.

Leslie Kramerich,

Acting Assistant Secretary, Pension and Welfare Benefits Administration.

[FR Doc. 00–18998 Filed 7–26–00; 8:45 am]

BILLING CODE 4510–29–M

DEPARTMENT OF LABOR

Pension and Welfare Benefits Administration

Working Group on Benefit Continuity After Organizational Restructuring, Advisory Council on Employee Welfare and Pension Benefits Plans; Notice of Meeting

Pursuant to the authority contained in section 512 of the Employee Retirement Income Security Act of 1974 (ERISA), 29 U.S.C. 1142, the Working Group of the Advisory Council on Employee Welfare and Pension Benefit Plans studying benefit continuity after organizational restructuring will hold an open public meeting on Monday, August 14, 2000, in Room N–5437 A–D, U.S. Department of Labor Building, Second and Constitution Avenue, NW, Washington, DC 20210.

The purpose of the open meeting, which will run from 9:30 a.m. to approximately noon, is for Working Group members to hearing testimony from the employers' perspective.

Members of the public are encouraged to file a written statement pertaining to the topic by submitting 20 copies on or before August 7, 2000, to Sharon Morrissey, Executive Secretary, ERISA Advisory Council, U.S. Department of Labor, Room N–5677, 200 Constitution Avenue, NW, Washington, DC 20210. Individuals or representatives of organizations wishing to address the Working Group should forward their request to the Executive Secretary or telephone (202) 219–8753. Oral presentations will be limited to 10 minutes, but an extended statement may be submitted for the record. Individuals with disabilities, who need special accommodations, should contact Sharon Morrissey by August 7, at the address indicated in this notice.

Organizations or individuals may also submit statements for the record without testifying. Twenty (20) copies of such statements should be sent to the Executive Secretary of the Advisory Council at the above address. Papers will be accepted and included in the record of the meeting if received on or before August 7.

Signed at Washington, D.C. this 21st day of July, 2000.

Leslie Kramerich,

Acting Assistant Secretary, Pension and Welfare Benefits Administration.

[FR Doc. 00–18999 Filed 7–26–00; 8:45 am]

BILLING CODE 4510–29–M

MISSISSIPPI RIVER COMMISSION

Sunshine Act Meeting

AGENCY HOLDING THE MEETINGS: Mississippi River Commission.

TIME AND DATE: 9 a.m., August 14, 2000.

PLACE: On board MISSISSIPPI V at Wabasha Landing, Wabasha, MN.

STATUS: Open to the public.

MATTERS TO BE CONSIDERED: (1) Summary of national and regional issues affecting Corps of Engineers and Commission programs and projects on the Mississippi River and its tributaries; (2) District Commander's overview of current project issues within St. Paul District; and (3) Views and comments on issues affecting programs or projects of the Commission and the Corps of Engineers.

TIME AND DATE: 1:30 p.m., August 16, 2000.

PLACE: On board MISSISSIPPI V at City Landing, Burlington, IA.

STATUS: Open to the public.

MATTERS TO BE CONSIDERED: (1) Summary of national and regional issues affecting Corps of Engineers and Commission programs and projects on the Mississippi River and its tributaries; (2) District Commander's overview of current project issues within Rock Island District; and (3) Views and comments on issues affecting programs or projects of the Commission and the Corps of Engineers.

TIME AND DATE: 6 p.m., August 17, 2000.

PLACE: On board MISSISSIPPI V at City Front, St. Louis, MO.

STATUS: Open to the public.

MATTERS TO BE CONSIDERED: (1) Summary of national and regional issues affecting Corps of Engineers and Commission programs and projects on the Mississippi River and its tributaries; (2) District Commander's overview of current project issues within St. Louis District; and (3) Views and comments on issues affecting programs or projects of the Commission and the Corps of Engineers.

TIME AND DATE: 8:30 a.m., August 21, 2000.

PLACE: On board MISSISSIPPI V at Old Ferry Landing, Tiptonville, TN.

STATUS: Open to the public.

MATTERS TO BE CONSIDERED: (1) Summary of national and regional issues affecting Corps of Engineers and Commission programs and projects on the Mississippi River and its tributaries; (2) District Commander's overview of current project issues within Memphis District; and (3) Views and comments on issues affecting programs or projects of the Commission and the Corps of Engineers.

TIME AND DATE: 8:30 a.m., August 22, 2000.

PLACE: On board MISSISSIPPI V at Tom Sawyer Mississippi River RV Park, West Memphis, AR.

STATUS: Open to the public.

MATTERS TO BE CONSIDERED: (1) Summary of national and regional issues affecting Corps of Engineers and Commission programs and projects on the Mississippi River and its tributaries; (2) District Commander's overview of current project issues within Memphis District; and (3) Views and comments on issues affecting programs or projects of the Commission and the Corps of Engineers.

TIME AND DATE: 3 p.m., August 23, 2000.

PLACE: On board MISSISSIPPI V at Fulton Street/Stevens Landing, Natchez, MS.

STATUS: Open to the public.

MATTERS TO BE CONSIDERED: (1) Summary of national and regional issues affecting Corps of Engineers and Commission programs and projects on the Mississippi River and its tributaries; (2) District Commander's overview of current project issues within Vicksburg District; and (3) Views and comments on issues affecting programs or projects of the Commission and the Corps of Engineers.

TIME AND DATE: 8:30 a.m., August 25, 2000.

PLACE: On board MISSISSIPPI V at City Front, Morgan City, LA.

STATUS: Open to the public.

MATTERS TO BE CONSIDERED: (1) Summary of national and regional issues affecting Corps of Engineers and Commission programs and projects on the Mississippi River and its tributaries; (2) District Commander's overview of current project issues within New Orleans District; and (3) Views and comments on issues affecting programs or projects of the Commission and the Corps of Engineers.

CONTACT PERSON FOR MORE INFORMATION: Mr. Stephen Gambrell, telephone 601–634–5766.

Gregory D. Showalter,

Army Federal Register Liaison Officer.

[FR Doc. 00–19130 Filed 7–25–00; 8:45 am]

BILLING CODE 3710–GX–U

NATIONAL SCIENCE FOUNDATION

Special Emphasis Panel in Chemical and Transport Systems; Notice of Meeting

In accordance with the Federal Advisory Committee Act (Pub. L. 92–463, as amended), the National Science Foundation announces the following meeting:

Name: Special Emphasis Panel in Chemical and Transport Systems (1190).

Date and Time: August 31, 2000; 8 a.m. to 5 p.m.

Place: National Science Foundation, 4201 Wilson Boulevard, Room 365, Arlington, VA 22230.

Type of Meeting: Closed.

Contact Person: Dr. Stefan Thynell, Program Director, Division of Chemical and Transport Systems (CTS), Room 525, (703) 306–1371.

Purpose of Meeting: To provide advice and recommendations concerning proposals submitted to NSF for financial support.

Agenda: To review and evaluate nominations for the FY 2000 NSF/Sandia Panel of proposals as part of the selection process for awards.

Reason for Closing: The proposals being reviewed include information of a proprietary or confidential nature, including technical information; financial data, such as salaries and personal information concerning individuals associated with the proposals. These matters are exempt under 5 U.S.C. 552b(c), (4) and (6) of the Government in the Sushshine Act.

Dated: July 24, 2000.

Karen J. York,

Committee Management Officer.

[FR Doc. 00–19029 Filed 7–26–00; 8:45 am]

BILLING CODE 7555–01–M

NATIONAL SCIENCE FOUNDATION

Advisory Panel for Developmental Mechanism; Notice of Meeting

In accordance with the Federal Advisory Committee Act (Pub. L. 92–463, as amended), the National Science Foundation (NSF) announces the following meeting.

Name: Developmental Mechanisms Advisory Board (1141).

Date/Time: October 25–27, 2000, 8:30 a.m.–6 p.m.

Place: National Science Foundation, Room 330, 4201 Wilson Blvd., Arlington, VA.

Type of Meeting: Part-Open.

Contact Persons: Dr. Judith Plesset and Dr. Susan Singer, Program Directors, Developmental Mechanism, Division of Integrative Biology and Neuroscience, Suite 685, National Science Foundation, 4201 Wilson Boulevard, Arlington, VA 22230, Telephone: (703) 306–1417.

Purpose of Meeting: To provide advice and recommendations concerning proposals submitted to NSF for financial support.

Minutes: May be obtained from the contact person listed above.

Agenda: Open Session: October 26, 2000; 3 p.m. to 4 p.m.—discussion on research trends, opportunities and assessment procedures in Integrative Biology and Neuroscience with Dr. Mary Clutter, Assistant Director, Directorate for Biological Sciences.

Closed Session: October 25, 2000, 8:30 a.m. to 6 p.m.; October 26, 2000, 8:30 a.m. to 3 p.m., and 4 p.m. to 6 p.m.; October 27, 2000, 8:30 a.m. to 5 p.m. To review and evaluate the Developmental Mechanism proposals as part of the selection process for awards.

Reason for Closing: The proposals being reviewed include information of a proprietary or confidential nature, including technical information; financial data, such as salaries; and personal information concerning individuals associated with the proposals. These matters are exempt under 5 U.S.C. 552b(c), (4) and (6) of the Government in the Sunshine Act.

Dated: July 24, 2000.

Karen J. York,

Committee Management Officer.

[FR Doc. 00–19031 Filed7–26–00; 8:45 am]

BILLING CODE 7555–01–M

NATIONAL SCIENCE FOUNDATION

Earth Sciences Proposal Review Panel; Notice of Meeting

In accordance with the Federal Advisory Committee Act (Public law 92–463, as amended), the National Science Foundation announces the following meeting.

Name: Earth Sciences Proposal Review Panel (1569).

Date/Time: September 13–15 & 20–22, 2000; 8 a.m. to 6 p.m. each day.

Place: Rooms 310, 340, 370, 380 & 390, National Science Foundation, 4201 Wilson Blvd., Arlington, VA.

Type of Meeting: Closed.

Contact Person: Dr. Herman B. Zimmerman, Division Director, Division of Earth Sciences, Room 785, National Science Foundation, Arlington, VA. (703) 306–1550.

Purpose of Meeting: To provide advice and recommendations concerning proposals submitted to NSF for financial support.

Agenda: To review and evaluate earth sciences proposals as part of the selection process for awards.

Reason For Closing: The proposals being reviewed include information of a proprietary or confidential nature, including technical information; financial data, such as salaries; and personal information concerning individuals associated with proposals. These matters are exempt under 5 U.S.C. 552b(c), (4) and (6) of the Government in the Sunshine Act.

Dated: July 24, 2000.

Karen J. York,

Committee Management Officer.

[FR Doc. 00–19033 Filed 7–26–00; 8:45 am]

BILLING CODE 7555–01–M

NATIONAL SCIENCE FOUNDATION

Special Emphasis Panel in Experimental & Integrative Activities; Notice of Meeting

In accordance with the Federal Advisory Committee Act (Pub. L. 92–463, as amended), the National Science Foundation announces the following meeting:

Name: Special Emphasis Panel in Experimental & Integrative Activities (1193).

Date/Time: July 24, 2000, 8:30 a.m.–5 p.m.

Place: Room 310 & 1235, National Science Foundation, 4201 Wilson Blvd., Arlington, VA.

Type of Meeting: Closed.

Contact Person: Dr. Virginia Eaton, Information Technology Workforce, Experimental and Integrative Activities, Room 1160, National Science Foundation, 4201 Wilson Boulevard, VA 22230, Telephone: (703) 306–1981.

Purpose of Meeting: To provide advice and recommendations concerning proposals submitted to the National Science Foundation for financial support.

Agenda: To review and evaluate CISE Information Technology Workforce proposals submitted in response to the program announcement (NSF 00–77).

Reason for Closing: The proposals being reviewed include information of a proprietary or confidential nature, including technical information; financial data, such as salaries; and personal information concerning individuals associated with the proposals. These matters are exempt under 5 U.S.C. 552b(c), (4) and (6) of the Government in the Sunshine Act.

Dated: July 24, 2000.

Karen J. York,

Committee Management Officer.

[FR Doc. 00–19030 Filed 7–26–00; 8:45 am]

BILLING CODE 7555–01–M

NATIONAL SCIENCE FOUNDATION

U.S. National Assessment Synthesis Team; Notice of Meeting

In accordance with the Federal Advisory Committee Act (Public Law 92–463, as amended), the National Science Foundation announces the following meeting:

Name: U.S. National Assessment Synthesis Team (#5219).

Date/Time: August 24, 2000; 8 a.m.–5:30 p.m. (**Note:** signups for making public comments will begin at 7:45 a.m.)

Place: Historic Inns of Annapolis, Governor Calvert Conference Center, 58 State Circle, Annapolis, MD, 21401.

Type of Meeting: Open.

Contact Person: Dr. Thomas Spence, National Science Foundation, 4201 Wilson Blvd., Suite 705, Arlington, VA 22230. Tel 703–306–1502 (703–292–5078 as of July 31); Fax: 703–306–0372 (703–292–9042 as of July 31); Email: tspence@nsf.gov. Interested persons should contact Ms. Susan Hensen at the above number as soon as possible to ensure space provisions are made for all participants and observers.

Meeting Minutes: May be obtained from the contact person listed above.

Purpose of Meeting: To review public comments on the draft report of the National Assessment Synthesis Team on the potential consequences of climate variability and climate change for the United States and to consider changes to the draft report in preparation for final review by the National Science and Technology Council.

Agenda: Members will review comments received during the public comment period and discuss and decide upon revisions to the draft report; parts of meeting may be subdivided into three concurrent subpanels, each of which will be open to the public. Beginning at approximately 8:30 AM, up to one hour will be provided for oral presentations by members of the public. Signups for making public comments will begin at 7:45 am.

Dated: July 24, 2000.

Karen J. York,

Committee Management Officer.

[FR Doc. 00–19032 Filed 7–26–00; 8:45 am]

BILLING CODE 7555–01–M

NUCLEAR REGULATORY COMMISSION

[Docket No. 50–219]

AmerGen Energy Company, LLC; Oyster Creek Nuclear Generating Station; Notice of Consideration of Approval of Transfer of Facility Operating License and Opportunity for a Hearing

The U.S. Nuclear Regulatory Commission (the Commission) is considering the issuance of an order under 10 CFR 50.80 approving the transfer of Facility Operating License No. DPR–16 for the Oyster Creek Nuclear Generating Station, currently held by GPU Nuclear, Inc. and Jersey Central Power & Light Company, as the owner and licensed operator.

A direct transfer of this license from GPU Nuclear, Inc. and Jersey Central Power & Light Company to AmerGen Energy Company, LLC (AmerGen) was approved by the Nuclear Regulatory Commission by an order dated June 6, 2000. The conforming amendment to the license to reflect this transfer will be issued upon completion of the purchase of the facility by AmerGen. Upon completion of this transfer, AmerGen will hold the license as the owner and licensed operator of Oyster Creek.

AmerGen submitted an application to the Commission dated February 28, 2000, which was supplemented by submittals dated May 12, June 1, and June 28, 2000, for a subsequent transfer of the license following the acquisition of Oyster Creek by AmerGen. The subsequent transfer proposed in the application dated February 28, 2000, as supplemented would result from the acquisition of PECO Energy Company's (PECO's) existing interest in AmerGen by a new generation company, Exelon Generation Company, LLC (EGC). EGC is to be a subsidiary of Exelon Ventures Company, which will be a wholly owned subsidiary of a new holding company, Exelon Corporation. Exelon Corporation will be formed from a planned merger between PECO and Unicom Corporation (Unicom). The facility is located in Lacey Township, Ocean County, New Jersey.

According to the application filed for approval by AmerGen, AmerGen is a limited liability company formed to acquire and operate nuclear power plants in the United States. British Energy, Inc., and PECO each own 50 percent of AmerGen. Following completion of the merger between Unicom and PECO, EGC will acquire PECO's existing 50-percent ownership interest in AmerGen. AmerGen, as owned by EGC and British Energy, Inc., will continue to be responsible, assuming the completion of the transfer of Oyster Creek to AmerGen, for the operation, maintenance, and eventual decommissioning of Oyster Creek. No physical changes to the facility or operational changes are being proposed in the application.

Pursuant to 10 CFR 50.80, no license, or any right thereunder, shall be transferred, directly or indirectly, through transfer of control of the license, unless the Commission shall give its consent in writing. The Commission will approve an application for the transfer of a license if the Commission determines that the proposed transferee is qualified to hold the license, and that the transfer is otherwise consistent with applicable provisions of law, regulations, and orders issued by the Commission pursuant thereto.

The filing of requests for hearing and petitions for leave to intervene, and written comments with regard to the license transfer application, are discussed below.

By August 16, 2000, any person whose interest may be affected by the Commission's action on the application may request a hearing and, if not the applicant, may petition for leave to intervene in a hearing proceeding on the Commission's action. Requests for a hearing and petitions for leave to intervene should be filed in accordance with the Commission's rules of practice set forth in Subpart M, ''Public Notification, Availability of Documents and Records, Hearing Requests and Procedures for Hearings on License Transfer Applications,'' of 10 CFR Part 2.

In particular, such requests and petitions must comply with the requirements set forth in 10 CFR 2.1306, and should address the considerations contained in 10 CFR 2.1308(a). Untimely requests and petitions may be denied, as provided in 10 CFR 2.1308(b), unless good cause for failure to file on time is established. In addition, an untimely request or petition should address the factors that the Commission will also consider, in reviewing untimely requests or petitions, set forth in 10 CFR 2.1308(b)(1)–(2).

Requests for a hearing and petitions for leave to intervene should be served

upon: Kevin P. Gallen, Esq., Morgan, Lewis & Bockius LLP, 1800 M Street, NW., Washington, DC 20036–5869; the General Counsel, U.S. Nuclear Regulatory Commission, Washington, DC 20555 (e-mail address for filings regarding license transfer cases only: OGCLT@NRC.gov); and the Secretary of the Commission, U.S. Nuclear Regulatory Commission, Washington, DC 20555–0001, Attention: Rulemakings and Adjudications Staff, in accordance with 10 CFR 2.1313.

The Commission will issue a notice or order granting or denying a hearing request or intervention petition, designating the issues for any hearing that will be held and designating the Presiding Officer. A notice granting a hearing will be published in the **Federal Register** and served on the parties to the hearing.

As an alternative to requests for hearing and petitions to intervene, by August 28, 2000, persons may submit written comments regarding the license transfer application, as provided for in 10 CFR 2.1305. The Commission will consider and, if appropriate, respond to these comments, but such comments will not otherwise constitute part of the decisional record. Comments should be submitted to the Secretary, U.S. Nuclear Regulatory Commission, Washington, DC 20555–0001, Attention: Rulemakings and Adjudications Staff, and should cite the publication date and page number of this **Federal Register** notice.

For further details with respect to this action, see the application dated February 28, 2000, and the supplements dated May 12, June 1, and June 28, 2000, available for public inspection at the Commission's Public Document Room, the Gelman Building, 2120 L Street, NW., Washington, DC, and accessible electronically through the ADAMS Public Electronic Reading Room link at the NRC Web site (*http:www.nrc.gov*).

Dated at Rockville, Maryland this 21st day of July 2000.

For the Nuclear Regulatory Commission.

Helen N. Pastis,

Senior Project Manager, Section 1, Project Directorate I, Division of Licensing Project Management, Office of Nuclear Reactor Regulation.

[FR Doc. 00–19008 Filed 7–26–00; 8:45 am]

BILLING CODE 7590–01–P

NUCLEAR REGULATORY COMMISSION

[Docket No. 50–410]

Niagara Mohawk Power Corporation; Notice of Consideration of Issuance of Amendment to Facility Operating License, Proposed No Significant Hazards Consideration Determination, and Opportunity for a Hearing

The U.S. Nuclear Regulatory Commission (the Commission) is considering issuance of an amendment to Facility Operating License No. NPF–69 issued to Niagara Mohawk Power Corporation (the licensee) for operation of the Nine Mile Point Nuclear Station, Unit No. 2 (NMP2) located in Scriba, Oswego County, New York.

The proposed amendment would allow a delay in implementation of the Improved Technical Specifications (ITS) from the current August 31, 2000, to December 31, 2000. The current implementation date was imposed by Amendment No. 91, dated February 15, 2000. Specifically, License Condition 2.C.(10), ''Additional Condition 1,'' of the operating license would be revised to show the new date of December 31, 2000.

Before issuance of the proposed license amendment, the Commission will have made findings required by the Atomic Energy Act of 1954, as amended (the Act) and the Commission's regulations.

The Commission has made a proposed determination that the amendment request involves no significant hazards consideration. Under the Commission's regulations in 10 CFR 50.92, this means that operation of the facility in accordance with the proposed amendment would not (1) involve a significant increase in the probability or consequences of an accident previously evaluated; or (2) create the possibility of a new or different kind of accident from any accident previously evaluated; or (3) involve a significant reduction in a margin of safety. As required by 10 CFR 50.91(a), the licensee has provided its analysis of the issue of no significant hazards consideration, which is presented below:

The operation of Nine Mile Point Unit 2, in accordance with the proposed amendment, will not involve a significant increase in the probability or consequences of an accident previously evaluated.

The proposed amendment delays implementation of the Improved Technical Specifications (ITS) from August 31, 2000 to December 31, 2000. The proposed deferral of the ITS implementation date is necessary in order to allow Operations shift crews a transition period of operating the plant using the CTS [current TS, referring to the pre-Amendment-No. 91 TS] and ITS in parallel to familiarize themselves with the differences. This transition period is considered essential to proper ITS implementation.

The proposed change is administrative in nature in that it simply defers implementation of the ITS for four months. Until the ITS are implemented, the CTS will remain in effect and the unit will continue to be operated in accordance with the NRC approved CTS requirements. Since the change is administrative, previously evaluated accident precursors or initiators are not affected and, as a result, the probability of accident initiation will remain as previously evaluated. Furthermore, the change will not affect the design, function, or operation of any structures, systems, or components, nor will it affect any maintenance, modification, or testing activities. Thus, there will be no impact on the capability of any structures, systems, or components to perform their credited safety functions to prevent an accident or mitigate the consequences of an accident previously evaluated. It is, therefore, concluded that operation in accordance with the proposed change will not involve a significant increase in the probability or consequences of an accident previously evaluated.

The operation of Nine Mile Point Unit 2, in accordance with the proposed amendment, will not create the possibility of a new or different kind of accident from any accident previously evaluated.

Deferral of the ITS implementation date is an administrative change. As such, the proposed change will not affect the design, function, or operation of any plant structures, systems, or components, nor will it affect any maintenance, modification, or testing activities. Since the change is administrative, there will be no impact on the process variables, characteristics, or functional performance of any structures, systems, or components in a manner that could create a new failure mode. Furthermore, the change will not introduce any new modes of plant operation or eliminate any actions required to prevent or mitigate accidents. It is, therefore, concluded that operation in accordance with the proposed change will not create the possibility of a new or different kind of accident from any accident previously evaluated.

The operation of Nine Mile Point Unit 2, in accordance with the proposed amendment, will not involve a significant reduction in a margin of safety.

Deferral of the ITS implementation date is an administrative change. As such, the proposed change does not involve any hardware changes or physical alteration of the plant and the change will have no impact on the design or function of any structures, systems, or components. Furthermore, the change will not eliminate any requirements, impose any new requirements, or alter any physical parameters which could reduce the margin to an acceptance limit. It is, therefore, concluded that operation in accordance with the proposed change will not involve a significant reduction in a margin of safety.

The NRC staff has reviewed the licensee's analysis and, based on this review, it appears that the three standards of 10 CFR 50.92(c) are satisfied. Therefore, the NRC staff proposes to determine that the requested amendment involves no significant hazards consideration.

The Commission is seeking public comments on this proposed determination. Any comments received within 30 days after the date of publication of this notice will be considered in making any final determination.

Normally, the Commission will not issue the amendment until the expiration of the 30-day notice period. However, should circumstances change during the notice period such that failure to act in a timely way would result, for example, in derating or shutdown of the facility, the Commission may issue the license amendment before the expiration of the 30-day notice period, provided that its final determination is that the amendment involves no significant hazards consideration. The final determination will consider all public and State comments received. Should the Commission take this action, it will publish in the **Federal Register** a notice of issuance and provide for opportunity for a hearing after issuance. The Commission expects that the need to take this action will occur very infrequently.

Written comments may be submitted by mail to the Chief, Rules and Directives Branch, Division of Administrative Services, Office of Administration, U.S. Nuclear Regulatory Commission, Washington, DC 20555–0001, and should cite the publication date and page number of this **Federal Register** notice. Written comments may also be delivered to Room 6D59, Two White Flint North, 11545 Rockville Pike, Rockville, Maryland, from 7:30 a.m. to 4:15 p.m. Federal workdays. Copies of written comments received may be examined at the NRC Public Document Room, the Gelman Building, 2120 L Street, NW., Washington, DC.

The filing of requests for hearing and petitions for leave to intervene is discussed below.

By August 28, 2000, the licensee may file a request for a hearing with respect to issuance of the amendment to the subject facility operating license and any person whose interest may be affected by this proceeding and who wishes to participate as a party in the proceeding must file a written request for a hearing and a petition for leave to intervene. Requests for a hearing and a petition for leave to intervene shall be filed in accordance with the Commission's ''Rules of Practice for Domestic Licensing Proceedings'' in 10 CFR Part 2. Interested persons should consult a current copy of 10 CFR 2.714 which is available at the Commission's Public Document Room, the Gelman Building, 2120 L Street, NW., Washington, DC, and accessible electronically through the ADAMS Public Electronic Reading Room link at the NRC Web site (http://www.nrc.gov). If a request for a hearing or petition for leave to intervene is filed by the above date, the Commission or an Atomic Safety and Licensing Board, designated by the Commission or by the Chairman of the Atomic Safety and Licensing Board Panel, will rule on the request and/or petition; and the Secretary or the designated Atomic Safety and Licensing Board will issue a notice of hearing or an appropriate order.

As required by 10 CFR 2.714, a petition for leave to intervene shall set forth with particularity the interest of the petitioner in the proceeding, and how that interest may be affected by the results of the proceeding. The petition should specifically explain the reasons why intervention should be permitted with particular reference to the following factors: (1) The nature of the petitioner's right under the Act to be made party to the proceeding; (2) the nature and extent of the petitioner's property, financial, or other interest in the proceeding; and (3) the possible effect of any order which may be entered in the proceeding on the petitioner's interest. The petition should also identify the specific aspect(s) of the subject matter of the proceeding as to which petitioner wishes to intervene. Any person who has filed a petition for leave to intervene or who has been admitted as a party may amend the petition without requesting leave of the Board up to 15 days prior to the first prehearing conference scheduled in the proceeding, but such an amended petition must satisfy the specificity requirements described above.

Not later than 15 days prior to the first prehearing conference scheduled in the proceeding, a petitioner shall file a supplement to the petition to intervene which must include a list of the contentions which are sought to be litigated in the matter. Each contention must consist of a specific statement of the issue of law or fact to be raised or controverted. In addition, the petitioner shall provide a brief explanation of the bases of the contention and a concise statement of the alleged facts or expert opinion which support the contention and on which the petitioner intends to rely in proving the contention at the hearing. The petitioner must also provide references to those specific sources and documents of which the petitioner is aware and on which the petitioner intends to rely to establish those facts or expert opinion. Petitioner must provide sufficient information to show that a genuine dispute exists with the applicant on a material issue of law or fact. Contentions shall be limited to matters within the scope of the amendment under consideration. The contention must be one which, if proven, would entitle the petitioner to relief. A petitioner who fails to file such a supplement which satisfies these requirements with respect to at least one contention will not be permitted to participate as a party.

Those permitted to intervene become parties to the proceeding, subject to any limitations in the order granting leave to intervene, and have the opportunity to participate fully in the conduct of the hearing, including the opportunity to present evidence and cross-examine witnesses.

If a hearing is requested, the Commission will make a final determination on the issue of no significant hazards consideration. The final determination will serve to decide when the hearing is held.

If the final determination is that the amendment request involves no significant hazards consideration, the Commission may issue the amendment and make it immediately effective, notwithstanding the request for a hearing. Any hearing held would take place after issuance of the amendment.

If the final determination is that the amendment request involves a significant hazards consideration, any hearing held would take place before the issuance of any amendment.

A request for a hearing or a petition for leave to intervene must be filed with the Secretary of the Commission, U.S. Nuclear Regulatory Commission, Washington, DC 20555–0001, Attention: Rulemakings and Adjudications Staff, or may be delivered to the Commission's Public Document Room, the Gelman Building, 2120 L Street, NW., Washington, DC, by the above date. A copy of the petition should also be sent to the Office of the General Counsel, U.S. Nuclear Regulatory Commission, Washington, DC 20555–0001, and to Mark J. Wetterhahn, Esquire, Winston & Strawn, 1400 L Street, NW., Washington, DC 20005–3502, attorney for the licensee.

Nontimely filings of petitions for leave to intervene, amended petitions, supplemental petitions and/or requests for hearing will not be entertained absent a determination by the

Commission, the presiding officer or the presiding Atomic Safety and Licensing Board that the petition and/or request should be granted based upon a balancing of the factors specified in 10 CFR 2.714(a)(1)(i)–(v) and 2.714(d).

For further details with respect to this action, see the application for amendment dated July 14, 2000, which is available for public inspection at the Commission's Public Document Room, the Gelman Building, 2120 L Street, NW., Washington, DC, and accessible electronically through the ADAMS Public Electronic Reading Room link at the NRC Web site (http://www.nrc.gov).

Dated at Rockville, Maryland, this 20th day of July 2000.

For the Nuclear Regulatory Commission.

Peter S. Tam,

Senior Project Manager, Section 1, Project Directorate I, Division of Licensing Project Management, Office of Nuclear Reactor Regulation.

[FR Doc. 00–19006 Filed 7–26–00; 8:45 am]

BILLING CODE 7590–01–P

NUCLEAR REGULATORY COMMISSION

[Docket Nos.: 70–784 and 40–7044]

Finding of No Significant Impact Related to Approval of the Remediation (Decommissioning) Plan for the Formerly Licensed Union Carbide Corporation Facility Lawrenceburg, TN, License Nos. SMB–720 and SNM–724 (Terminated)

The U.S. Nuclear Regulatory Commission (NRC) is considering approval of the remediation (decommissioning) plan (DP) for the formerly licensed Union Carbide Corporation (UCC) facility in Lawrenceburg, Tennessee, 1988. This DP was submitted by UCAR Carbon Company, Inc. (UCAR) to NRC on August 19, 1998. UCAR is obligated to remediate the UCC site to meet the release criteria established in the Action Plan to Ensure Timely Remediation of Sites Listed in the Site Decommissioning Management Plan (NRC, 1992), and CFR Part 20 Subpart E.

Environmental Assessment

Introduction

On August 26, 1963, UCC was issued Special Nuclear Materials License No. SNM–724 (SNM–724), for testing equipment and nuclear fuels development. License No. SMB–720 (SMB–720), which authorized the possession of source material, was also held by the site. SNM–724 was terminated on June 4, 1974, and the U.S. Atomic Energy Commission (AEC) released the site for unrestricted use. SMB–720 was superceded by the State of Tennessee License No. S–5002–H8 and was terminated on August 28, 1975.

SNM–724 authorized possession of up to 500 grams (g) of fully-enriched (<94 percent) uranium for testing of equipment and processes in the Lawrenceburg Fuel Development Facility located at Highway 43 South, Lawrenceburg, Tennessee. On May 22, 1964, the license was amended to authorize possession of 150 kilograms (kg) of U^{235} to make graphite-coated uranium-thorium carbide particles and graphite-matrix fuel elements. The possession limit was increased to 475 kg on June 12, 1964.

By letter dated February 4, 1974, the UCC submitted ''closeout'' survey information and requested that SNM–724 be terminated and the facility be released for unrestricted use. On April 5, 1974, Region II performed a closeout inspection which was documented in their Inspection Report 70–784/74–1. Region II recommended that the license be terminated, and the facility be released for unrestricted use. By AEC letter dated June 4, 1974, SNM–724 was terminated, and the UCC facility released for unrestricted use.

In 1991, Oak Ridge National Laboratory (ORNL) was contracted by NRC to review and evaluate all nuclear material licenses terminated by NRC or its predecessor agencies, since inception of material regulation in the late 1940s. One of the objectives of this review was to identify sites with potential for residual contamination, based on information in the license documentation. NRC evaluated the available survey data to determine if the information was sufficient to conclude that the site meets the existing guidelines for unrestricted use.

Radiological assessments performed at the UCC facility and immediate vicinity have identified the presence of enriched and depleted uranium on building surfaces in excess of current radiological release criteria. Sampling identified contamination in three buildings on the UCC site: (1) Building 10; (2) Building 5 Annex; and (3) the Metallurgy Laboratory. Surface contamination in Building 10, Building 5 Annex, and in the Metallurgy Laboratory was primarily present as fixed contamination.

Surface contamination for α and β/γ activity above the release guidelines was identified in 11 rooms in Building 10 (Rooms 106–2, 120, 121, 122, 124, 126, 128–1, 129, 132, 133, and 134) ranging from background to 106,469 dpm/100 square centimeter direct beta/gamma. For each sample containing significant contamination, results indicated the presence of enriched uranium. This is consistent with process knowledge of the operational history. For this reason, thorium is considered an insignificant indicator for evaluating surface activity data.

Uranium was also the primary contaminant in Building 5 Annex. Surface contamination was found in four rooms in Building 5 (Rooms 106, 107, 108, 110), ranging from background to 428,698 dpm/100 square centimeters direct beta/gamma.

Contamination in the Metallurgy Laboratory consists of localized surface contamination on the tops of the cabinets. There was no indication of radioactive material above the release criteria beyond the former restricted area boundary in the ground water, settling basins, or former sanitary sewer system.

UCAR will be conducting remediation activities without a license, because its license was terminated in 1974. However, remediation will be performed in accordance with current regulations and release limits (UCAR, 1998).

Planned Decommissioning Action

Decommissioning of the UCAR facility shall comply with the SDMP Action (NRC, 1992) Plan criteria. The conduct of decommissioning and decontamination in compliance with these criteria provides adequate protection of the public health and safety and of the environment. In implementing the decommissioning plan, UCAR shall reduce residual contamination on building surfaces to be below the NRC's unrestricted release criteria (NRC, April 1992) for uranium. Building surfaces will be decontaminated with pneumatic needle-scalers, floor scabblers, vacuums and/or similar equipment. Structures that cannot be cost-effectively decontaminated (*e.g.*, counter tops, wooden drawers, duct work, and Room 134 penthouse) will be mechanically removed, reduced in volume/minimized, and packaged for disposal.

General exposure rate levels will be reduced to levels below 5 microroentgen per hour (uR/hr) above background, measured at 1 meter (m) above the surface.

UCAR is proposing to conduct a final survey to demonstrate: (1) That surface contamination levels meet the guideline levels for uranium established in ''Guidelines for Decontamination of Facilities and Equipment Prior to Release for Unrestricted Use or

Termination of Licenses for Byproduct, Source or Special Nuclear Material;'' and (2) that exposure rate measurements are less than 5 uR/hr measured 1 meter above the surface. UCAR has committed to conducting the final survey in accordance with the NRC approved site survey plan, as well as any applicable regulatory requirements.

The Need for the Planned Action

The former UCAR facility is currently being used to manufacture non-radiological carbon products. The planned action is necessary to reduce residual contamination at the site to meet NRC's unrestricted release criteria.

Alternative to the Planned Action

The alternative to the proposed action is to take no action. A no-action alternative would mean the site would not be remediated now. Although there is no immediate threat to the public health and safety from this site, not undertaking remediation, at this time, does not solve the regulatory and potential long-term health and safety problems associated with having residual contamination on site. In addition, pursuing no action would delay remediation until some time in the future, when remediation costs could be much higher than they are today. Therefore, the no-action alternative is not acceptable.

Environmental Impacts of the Planned Action

Radiological impacts that could result from the remediation of the former UCC site are direct exposure, inhalation, and ingestion hazards to workers. These hazards could occur during decontamination of building surfaces and excavation and packaging of contaminated soil.

The radioactive material of concern at this site is enriched uranium. Surface contamination in Buildings 10 and 5 Annex, and the Metallurgy Laboratory is primarily fixed. Gamma exposure rate measurements taken at locations throughout the site do not exceed background levels, with the exception of five locations near the incinerator pad. The highest radiation exposure rate detected near the incinerator pad is 26 uR/hr above background. Because the gamma exposure rate measurements are low, direct exposure to workers is not a significant radiological hazard.

Building surfaces, such as concrete floors, walls, and ceilings, will be decontaminated with equipment, such as pneumatic needle-scalers, floor scabblers, vacuums, and/or similar equipment. This equipment will be equipped with the appropriate health and safety devices, such as high-efficiency particulate air filters. If determined necessary by the Radiation Safety Officer (RSO), containment enclosures will be constructed for contamination control. UCAR will implement an occupational exposure monitoring program to ensure that internal and external exposures of workers are well below the regulatory limits. Respiratory protection will be required for workers when airborne radioactivity could result in exposures above the administrative action levels set in the health and safety plan.

Although the potential for external exposure to workers is low, UCAR will survey work areas for direct radiation whenever remediation is being performed. If dose rates exceed 5 mrem/hr, or if the RSO determines that worker exposure could exceed 10 percent of the regulatory limits found in Part 20, Subpart C ''Occupational Dose Limits,'' worker exposure will be monitored with thermoluminescent dosimeters.

UCAR has committed to implement a contamination monitoring and control program to detect and minimize the spread of contamination. Contamination monitoring will be accomplished by: (1) Conducting routine surveys; (2) use of access controls to prevent inadvertent personnel access to contaminated areas; (3) use of radiation work permits in areas where there is potential for workers to exceed 10 percent of the regulatory limits; (4) use of personal protection equipment; and (5) employee training.

UCAR has committed to implementing a contaminant monitoring and control program to detect and minimize off-site effluent releases (UCAR, in its DP Section 3.3.4, 1998). The primary pathway for off-site release of radioactive material is airborne effluent. Inhalation and ingestion impacts will be minimized to the workers and public by controlling airborne material levels. Routine and special environmental monitoring will be conducted to detect, assess, and limit potential airborne releases. Air monitoring will be performed in work areas using Breathing Zone Air (BZA) samplers or high-volume air samplers. Administrative action levels at 10 percent of the regulatory limits for airborne effluents have been established. Investigations will be performed if administrative action levels are exceeded. No liquid wastes have been identified and none are expected.

Radioactive waste will be segregated from non-radioactive waste and stored in a controlled, fenced area. Radioactive waste will be stored inside, if possible. Otherwise, it will be stored outside and covered to protect against the weather. Radioactive waste will be packaged, labeled, manifested, and shipped in accordance with NRC and U.S. Department of Transportation requirements.

This site is being remediated to the criteria listed in the SDMP Action Plan (NRC, 1992). The exposure to the public from the remediated site is expected to be within the limits stipulated in Part 20, Subpart D.

Agencies and Individuals Consulted

This environmental assessment (EA) was prepared by NRC staff. No other sources were used beyond those referenced in this EA. NRC staff provided a draft of the EA to the Tennessee Department of Environment and Conservation, Division of Radiological Health for review. By e-mail dated May 1, 2000, the Tennessee Department of Environment and Conservation Division of Radiological Health agreed with NRC's conclusion that the proposed action will not have any significant affect on the quality of the human environment.

NRC contacted the U.S. Fish and Wildlife Service (FWS) to determine the potential impacts of the proposed action on threatened and endangered species near the UCAR facility. By letter dated September 10, 1999, the FWS informed NRC that the proposed action would have no impact on threatened and endangered species.

NRC staff provided a draft of the EA to the U.S. Environmental Protection Agency (EPA) Region IV for review. By e-mail dated June 27, 2000, EPA did not have any comments on the proposed action. However, the EPA has noted the disagreement between the EPA and the NRC about the appropriate dose criteria to be used in decommissioning.

NRC also contacted the Tennessee State Historical Preservation Office to determine if any historical properties would be impacted by the proposed action. The Tennessee State Historical Preservation Office informed the NRC, by letter dated May 2, 2000, that there is no national register of historic places listed or eligible properties affected by the project.

Conclusion

During the decommissioning operation, radiological exposure to workers and annual average concentrations of radioactive materials released off-site will be in accordance with Part 20 limits. UCAR has committed to perform remediation in accordance with an acceptable Health and Safety Plan. The Health and Safety

Plan shall provide adequate controls to keep potential doses to workers and the public from direct exposure, airborne material, and released effluents as low as is reasonably achievable.

NRC also believes that remediation of the facility according to the SDMP Action Plan criteria (NRC, 1992) adequately protects workers, members of the public, and the environment. The potential environmental impacts from the proposed action are not significant.

References

1. NRC, ''Action Plan to Ensure Timely Remediation of Sites Listed in the Site Decommissioning Management Plan,'' 57 FR 13389, April 16, 1992.

2. NRC, ''Radiological Criteria for License Termination,'' 10 CFR Part 20, Subpart E, 62 FR 139, July 21, 1997.

3. NRC, ''Multi-Agency Radiation Survey and Site Investigation Manual, (MARSSIM),'' NUREG–1575, December 1997.

4. NRC, ''Draft Manual for Conducting Radiological Surveys in Support of License Termination,'' NUREG/CR–5849, June 1992.

5. Union Carbide Company Inc., ''Remediation (Decommissioning) Plan for the Formerly Licensed Union Carbide Corporation Facility (UCC), Lawrenceburg, TN,'' August 19, 1998.

Finding of No Significant Impact

NRC has prepared an EA related to the approval of UCAR's Remediation (Decommissioning) Plan, Terminated License No. SNM–724 and SMB–720. On the basis of this EA, NRC has concluded that the environmental impacts that would be created by the proposed action would not be significant and do not warrant the preparation of an Environmental Impact Statement. Accordingly, it has been determined that a Finding of No Significant Impact is appropriate.

The EA and the documents related to this proposed action are available for public inspection and copying at NRC's Electronic Reading Room at http://www.nrc.gov/NRC/ADAMS/index.html.

FOR FURTHER INFORMATION CONTACT: Rebecca Tadesse, Project Manager, Decommissioning Branch, Division of Waste Management, Office of Nuclear Material Safety and Safeguards. Telephone: (301) 415–6221.

Dated at Rockville, Maryland, this 20th day of July 2000.

For the Nuclear Regulatory Commission.

Larry W. Camper,

Chief, Decommissioning Branch, Division of Waste Management, Office of Nuclear Material Safety and Safeguards.

[FR Doc. 00–19005 Filed 7–26–00; 8:45 am]

BILLING CODE 7590–01–P

NUCLEAR REGULATORY COMMISSION

Experts' Meeting on Burnup Credit in Spent Fuel Shipping Casks

AGENCY: Nuclear Regulatory Commission.

ACTION: Notice of meeting.

SUMMARY: The Nuclear Regulatory Commission will hold a meeting to develop a Phenomena Identification and Ranking Table (PIRT) for allowing burnup credit in spent fuel shipping casks. PIRTs have been used at NRC since 1988, and they provide a structured way to obtain a technical understanding that is needed to address certain issues. About fifteen of the world's best technical experts are participating in this activity, and the experts represent a balance between industry, universities, foreign researchers, and regulatory organizations. The PIRT activity is addressing technical issues related to burnup credit in the criticality safety analyses of PWR spent fuel in transport casks.

DATES: August 22–24, 2000, 8:30 am–5:30 pm.

ADDRESSES: Advisory Committee on Reactor Safeguards (ACRS) Room (T2B3) of the Nuclear Regulatory Commission, 11545 Rockville Pike, Rockville, MD.

FOR FURTHER INFORMATION CONTACT: Dr. David Ebert, SMSAB, Division of Systems Analysis and Regulatory Effectiveness, Office of Nuclear Regulatory Research, Washington, D.C. 20555–0001, telephone (301) 415–6501.

SUPPLEMENTARY INFORMATION: The meeting agenda will be posted on the NRC Web site at *www.nrc.gov/RES/meetings.html* by August 14, 2000. The meeting is open to the public. Attendees will need to obtain a visitor badge at the TWFN building lobby, but an escort is not required.

Dated at Rockville, Maryland, this 21 day of July, 2000.

For the Nuclear Regulatory Commission.

Farouk Eltawila,

Acting Director, Division of Systems Analysis and Regulatory Effectiveness, Office of Nuclear Regulatory Research.

[FR Doc. 00–19007 Filed 7–26–00; 8:45 am]

BILLING CODE 7590–01–P

POSTAL SERVICE

United States Postal Service Board of Governors; Sunshine Act Meeting

TIMES AND DATES: 11 a.m., Monday, August 7, 2000; 8:30 a.m., Tuesday, August 8, 2000.

PLACE: Reno, Nevada, at the Silver Legacy Hotel, 407 North Virginia Street, in the Silver Baron D&E rooms.

STATUS: August 7, (Closed); August 8 (Open).

MATTERS TO BE CONSIDERED:

Monday, August 7—11 a.m. (Closed)

1. Postal Rate Commission Opinion and Recommended Decision in Docket No. MC2000–2, Mailing Online Experiment.
2. Financial Performance.
3. Contingent Borrowing Authority.
4. Fiscal Year 2000 Economic Value Added (EVA) Variable Pay Program.
5. Establish/Deploy Process.
6. *Priority Mail Global Guaranteed* (PMGG).
7. Personnel Matters.
8. Compensation Issues.

Tuesday, August 8—8:30 a.m. (Open)

1. Minutes of the Previous Meeting, July 10–11, 2000.
2. Remarks of the Deputy Postmaster General.
3. Briefing on the Inspector General Hotline.
4. Capital Investments.

a. 2,403 Mixed Delivery and Collection Vehicles.

b. Delivery Operations Information System (DOIS).

c. Delivery Bar Code Sorter Expanded Capability (DBCS–EC).

d. Carrier Sequence Bar Code Sorter (CSBCS) Sort Bin Expansion.

e. Small Parcel & Bundle Sorters (SPBS) Control System Modifications.

f. Las Vegas, Navada—Crossroads and Topaz Stations.

5. Report on the Western Area and Las Vegas District.
6. Tentative Agenda for the August 28–29, 2000, meeting in Washington, DC.

CONTACT PERSON FOR MORE INFORMATION: David G. Hunter, Secretary of the Board, U.S. Postal Service, 475 L'Enfant Plaza, SW., Washington, DC 20260–1000. Telephone (202) 268–4800.

David G. Hunter,

Secretary.

[FR Doc. 00–19109 Filed 7–25–00; 2:19 pm]

BILLING CODE 7710–12–M

SECURITIES AND EXCHANGE COMMISSION

[Release No. 34–43060; File No. SR–MSRB–00–08]

Self-Regulatory Organizations; Notice of Filing of Proposed Rule Change by the Municipal Securities Rulemaking Board Relating to Reports of Sales and Purchases, Pursuant to Rule GH–14

July 20, 2000.

Pursuant to section 19(b)(1) of the Securities Exchange Act of 1934 (''Act'')[1] and Rule 19b-4 thereunder,[2] notice is hereby given that on June 15, 2000, the Municipal Securities Rulemaking Board (''Board'' or ''MSRB'') filed with the Securities and Exchange Commission (''Commission'' or ''SEC'') a proposed rule change as described in Items I, II, and III below, which Items have been prepared by the Board. The Commission is publishing this notice to solicit comments on the proposed rule change from interested persons.

I. Self-Regulatory Organization's Statement of the Terms of Substance of the Proposed Rule Change

The Board is filing a proposed rule change to institute a service (''Service'') to provide historical information on all transactions in municipal securities (''Comprehensive Transaction Report'' or ''Report''). The transaction information on the Report would come from reports made to the Board by brokers, dealers and municipal securities dealers (''dealers'') pursuant to Rule G–14, which governs reports of sales or purchases. This rule currently requires dealers to report essentially all inter-dealer and customer transactions in municipal securities to the Board by midnight of trade date.

The proposed Report would be the fourth product offered by the Board to increase the amount of price transparency in the municipal securities market. The three existing products all provide information on ''frequency traded'' issues—issues on which at least four transaction reports were received for a given trade date. The existing products are produced and made available electronically by approximately 7 a.m. each business day and cover the previous day's trading. In contrast, the proposed Comprehensive Transaction Report would provide information on every municipal security transaction, including transactions in issues that are traded less than four times during a day. The Comprehensive Transaction Report would be made available on a delayed (historical) basis, once a month, covering the previous month's trading.

The proposed Comprehensive Transaction Report would be available by a subscription service. Each month, computer-readable compact disks, each containing information on all trades done during the previous month, would be provided to subscribers. The subscription fee would be $2,000 per year.

II. Self-Regulatory Organization's Statement of the Purpose of, and Statutory Basis for, the Proposed Rule Change

In its filing with the Commission, the Board included statements concerning the purpose of, and basis for, the proposed rule change and discussed any comments it received on the proposed rule change. The text of these statements may be examined at the places specified in Item IV above. The Board has prepared summaries, set forth in Sections A, B, and C below, of the most significant aspects of such statements.

A. Self-Regulatory Organization's Statement of the Purpose of, and Statutory Basis for, the Proposed Rule Change

1. Purpose

a. Introduction

The Board has a long-standing policy to increase price transparency in the municipal securities market, with the ultimate goal of disseminating comprehensive and contemporaneous pricing data. Since 1995, the Board has expanded the scope of the public transparency reports in several steps. Each step has provided industry participants and the public with successively more information about the market.[3]

Until now, all the Board's reports have provided information about ''frequently traded'' municipal securities. ''Frequently traded'' securities are those that are traded four or more times on a given business day. The existing reports are produced daily on a T+1 basis, *i.e.,* with information for trades effected during the preceding day.

In designing the first T+1 transparency report and subsequent enhanced versions, the Board adopted the threshold of four trades a day because of the concern that an isolated transaction may not necessarily provide a reliable indicator of ''market price'' and might be misleading to an observer not familiar with the market. At the same time, the Board made a commitment to review the use of these reports as experience was obtained and eventually to move to a more contemporaneous and comprehensive price transparency report.[4]

The Board believes that the next appropriate step in this process is to add, on a delayed basis, information on transactions in infrequently traded securities—those that were traded once, twice or three times on a given day. The Board therefore is proposing to release data about each trade in a Comprehensive Transaction Report that would be made available approximately 30 days after month-end. In proposing this Report, the Board is responding to informal requests from prospective subscribers to the current transparency reports. There persons have noted they could compile more complete databases of price information, which would be helpful in evaluating current trades, if historical data on infrequently traded issues were available. For example, comprehensive data might enable ''matrix pricing'' analysts to refine their evaluations of securities, and might help dealers to establish more accurate market prices for their current inventories. The comprehensive data also would be useful to persons studying the market from a market research or an academic perspective. Several prospective users of comprehensive data have mentioned that these data would be useful even if only available on a delayed basis rather than on T+1.

As experience is gained with reporting all transactions on a delayed basis, the Board will evaluate how best to expand price reporting in subsequent steps, for example, by including more data on infrequently traded issues on a T+1 basis, by shortening the delay for publication of the Comprehensive

[1] 15 U.S.C. 78s(b)(1).

[2] 17 CFR 240.19b–4.

[3] The report summarizing prices for issues that are frequently traded on the inter-dealer market began operation in 1995; in 1998, dealer-customer prices were added in a second summary report; and in January 2000, a report with details of trades in frequently traded issues was added. *See* Securities Exchange Act Release No. 42241 (December 16, 1999), 64 FR 72123 (December 23, 1999). The proposed rule change would not affect the summary and detailed public reports of frequently traded issues.

[4] *See, e.g.,* ''Board to Proceed with Pilot Program to Disseminate Inter-Dealer Transaction Information,'' *MSRB Reports,* Vol. 14, No. 1 (January 1994). In its approval order for the Inter-Dealer Daily Report, the Commission noted that the Board, in proceeding to subsequent levels of transparency, ''should continue to work toward publicly disseminating the maximum level of useful information to the public while ensuring that the information and manner in which it is presented is not misleading.'' *See* Securities Exchange Act Release No. 34955 (November 9, 1994), 59 FR 59810 (November 18, 1994).

Transportation Report, or by other collection and dissemination methods. As the Board previously has noted, its goal is ultimately to provide comprehensive and contemporaneous transaction reports to the market. [5]

b. Description of Proposed Report

The proposed Comprehensive Transaction Report would provide information on individual municipal securities transactions. Data about each trade on the proposed Report would be similar to that on the current Daily Transaction Report. For each trade, the proposed Report would show the trade date, the CUSIP number of the issue traded, a short issue description, the par value traded, the time of trade reported by the dealer, the price of the transaction, and the dealer-reported yield of the transaction, if any. Each transaction would be categorized as a sale by a dealer to a customer, a purchase from a customer, or an inter-dealer trade.

C. Impact of Proposed Report on Transparency

The proposed Comprehensive Transaction Report would represent a substantial increase in the number of trades on which information is made available. An average of about 29,000 transactions per day would be included, which is more than three times as many as are included in the current T+1 daily reports. The number of issues reported would increase from about 1,600 on a typical day to about 14,000. [6]

In addition to information on infrequently traded issues, the proposed Report also would provide information on two other types of trades not in the current Daily Transaction Reports: trades reported late (after trade date), and corrected trades (trades reported incorrectly on trade date that subsequently are corrected by the dealer). These would improve the accuracy of the reported information as well as make it more comprehensive. [7]

d. Description of Proposed Service

The proposed Service would make the Comprehensive Transaction Report available once a month to subscribers. The Board would send subscribers each month a compact disk containing all trades effected during the previous calendar month. The Board plans to make sample disks with a single month's data available to prospective users without charge, so that they may determine whether they wish to subscribe.

The Board is establishing a fee for an annual subscription to the Service of $2,000. The proposed fee is structured approximately to defray the Board's cost for production of 12 monthly data sets, transcription to compact disks, mailing, and subscription maintenance.

2. Statutory Basis

The Board believes the proposed rule change is consistent with the requirements of Section 15B(b)(2)(C) of the Act, [8] which provides that the Board's rules shall be designed to prevent fraudulent and manipulative acts and practices, to promote just and equitable principles of trade, to foster cooperation and coordination with persons engaged in regulating, clearing, settling, processing information with respect to, and facilitating transactions in municipal securities, to remove impediments to and perfect the mechanism of a free and open market in municipal securities, and, in general, to protect investors and the public interest.

B. Self-Regulatory Organization's Statement on Burden on Competition

The Board does not believe that the proposed rule change will impose any burden on competition because it applies equally to all dealers in municipal securities.

C. Self-Regulatory Organization's Statement on Comments on the Proposed Rule Change Received From Members, Participants, or Others

The Board did not solicit nor receive written comments.

III. Date of Effectiveness of the Proposed Rule Change and Timing for Commission Action

Within 35 days of the date of publication of this notice in the **Federal Register** or within such longer period (i) as the Commission may designate up to 90 days of such date if it finds such longer period to be appropriate and publishes its reasons for so finding or (ii) as to which the MSRB consents, the Commission will:

(A) by order approve such proposed rule change, or

(B) institute proceedings to determine whether the proposed rule change should be disapproved.

IV. Solicitation of Comments

Interested persons are invited to submit written data, views, and arguments concerning the foregoing, including whether the proposed rule change is consistent with the Act. Persons making written submissions should file six copies thereof with the Secretary, Securities and Exchange Commission, 450 Fifth Street, NW, Washington, DC 20549–0609. Copies of the submission, all subsequent amendments, all written statements with respect to the proposed rule change that are filed with the Commission, and all written communications relating to the proposed rule change between the Commission and any person, other than those that may be withheld from the public in accordance with the provisions of 5 U.S.C. 552, will be available for inspection and copying in the Commission's Public Reference Room. Copies of the filing will also be available for inspection and copying at the Board's principal offices. All submissions should refer to File No. SR–MSRB–00–08 and should be submitted by August 17, 2000.

For the Commission, by the Division of Market Regulation, pursuant to delegated authority.[9]

Jonathan G. Katz,

Secretary.

[FR Doc. 00–18960 Filed 7–26–00; 8:45 am]

BILLING CODE 8010–01–M

SMALL BUSINESS ADMINISTRATION

[Applicant No. 99000414]

Selby Venture Partners II, L.P; Notice Seeking Exemption Under Section 312 of the Small Business Investment Act, Conflicts of Interest

Notice is hereby given that Selby Venture Partners II, L.P., 2460 Sand Hill Road, Suite 200, Menlo Park, California 94025, an applicant for a Federal License under the Small Business Investment Act of 1958, as amended (''the Act''), in connection with the financing of a small concern, has sought an exemption under section 312 of the Act and section 107.730, Financings which Constitute Conflicts of Interest of the Small Business Administration (''SBA'') rules and regulations (13 CFR

[5] *See* Securities Exchange Act Release No. 42090 (November 2, 1999), 64 FR 60865 (November 8, 1999).

[6] These trade volume statistics are based on February 2000 market activity.

[7] To enable the Board to compile a comprehensive trades database for enforcement purposes, dealers report certain data after trade date. These data are, of course, not available to the Board in time to be included in the T+1 daily reports. The post-trade date data also include ''corrections'' to trades that were initially reported inaccurately with regard to price, par, etc. All together, corrected and late trades in frequently traded issues amount to about six percent of the number of trades in the current T+1 daily reports.

[8] 15 U.S.C. 78o–4(b)(2)(C).

[9] 17 CFR 200.30–3(a)(12).

107.730 (2000)). Selby Venture Partners II, L.P. proposes to provide equity financing to OneChannel.net, Inc., 444 Castro Street, Suite 130, Mountain View, California 94041. The financing is contemplated for working capital, the acquisition of machinery and equipment, and marketing.

The financing is brought within the purview of Sec. 107.730(a)(1) of the Regulations because Selby Venture Partners, L.P., an Associate of Selby Venture Partners II, L.P., currently owns greater than 10 percent of OneChannel.net, Inc. and therefore OneChannel.net, Inc. is considered an Associate of Selby Venture Partners II, L.P. as defined in sec. 107.50 of the regulations.

Notice is hereby given that any interested person may submit written comments on the transaction to the Associate Administrator for Investment, U.S. Small Business Administration, 409 Third Street, SW, Washington, DC 20416.

Dated: July 19, 2000.

Don A. Christensen,

Associate Administrator for Investment.

[FR Doc. 00–18979 Filed 7–26–00; 8:45 am]

BILLING CODE 8025–01–P

SMALL BUSINESS ADMINISTRATION

[Declaration of Disaster #3273]

State of Missouri

Greene County and the contiguous counties of Christian, Dade, Dallas, Lawrence, Polk, and Webster in the State of Missouri constitute a disaster area as a result of damages caused by heavy rain and flash flooding that occurred on July 12, 2000. Applications for loans for physical damage as a result of this disaster may be filed until the close of business on *September 18, 2000,* and for economic injury until the close of business on *April 19, 2001* at the address listed below or other locally announced locations: U.S. Small Business Administration, Disaster Area 3 Office, 4400 Amon Carter Blvd., Suite 102, Ft. Worth, TX 76155

The interest rates are:

	Percent
For Physical Damage:	
Homeowners With Credit Available Elsewhere	7.375
Homeowners Without Credit Available Elsewhere	3.687
Businesses With Credit Available Elsewhere	8.000
Businesses and Non-Profit Organizations Without Credit Available Elsewhere	4.000
Others (Including Non-Profit Organizations) With Credit Available Elsewhere	6.750
For Economic Injury:	
Businesses and Small Agricultural Cooperatives Without Credit Available Elsewhere	4.000

The numbers assigned to this disaster are 327306 for physical damage and 9H8700 for economic injury.

(Catalog of Federal Domestic Assistance Program Nos. 59002 and 59008).

Dated: July 19, 2000.

Aida Alvarez,

Administrator.

[FR Doc. 00–18978 Filed 7–26–00; 8:45 am]

BILLING CODE 8025–01–U

SMALL BUSINESS ADMINISTRATION

[Declaration of Disaster #3272]

State of Wisconsin (Amendment #1)

In accordance with notices from the Federal Emergency Management Agency, dated July 17 and 18, 2000, the above-numbered Declaration is hereby amended to include Racine, Richland, and Sauk Counties in the State of Wisconsin as a disaster area due to damages caused by severe storms, tornadoes, and flooding. This declaration is further amended to reopen the incident period for this disaster and establish it as beginning on May 26, 2000 and continuing.

In addition, applications for economic injury loans from small businesses located in the contiguous County of Adams, Wisconsin may be filed until the specified date at the previously designated location. Any counties contiguous to the above-named primary counties and not listed herein have been previously declared.

All other information remains the same, *i.e.,* the deadline for filing applications for physical damage is September 9, 2000 and for economic injury the deadline is April 11, 2001.

(Catalog of Federal Domestic Assistance Program Nos. 59002 and 59008.)

Dated: July 19, 2000.

Herbert L. Mitchell,

Acting Associate Administrator for Disaster Assistance.

[FR Doc. 00–18977 Filed 7–26–00; 8:45 am]

BILLING CODE 8025–01–U

SOCIAL SECURITY ADMINISTRATION

Privacy Act of 1974 as Amended; Computer Matching Program (Model SSA/State Courts) Match Number 1091

AGENCY: Social Security Administration (SSA).

ACTION: Notice of computer matching program.

SUMMARY: In accordance with the provisions of the Privacy Act, as amended, this notice announces a computer matching program that SSA plans to conduct with State Courts.

DATES: SSA will file a report of the subject matching program with the Committee on Governmental Affairs of the Senate, the Committee on Government Reform and Oversight of the House of Representatives, and the Office of Information and Regulatory Affairs, Office of Management and Budget (OMB). The matching program will become effective as indicated above.

ADDRESSES: Interested parties may comment on this notice by either telefax to (410) 966–2935 or writing to the Associate Commissioner, Office of Program Support, 2–Q–16 Operations, 6401 Security Boulevard, Baltimore, MD 21235–6401. All comments received will be available for public inspection at this address.

FOR FURTHER INFORMATION CONTACT: The Associate Commissioner for Program Support as shown above.

SUPPLEMENTARY INFORMATION:

A. General

The Computer Matching and Privacy Protection Act of 1988 (Public Law (Pub. L.) 100–503), amended the Privacy Act (5 U.S.C. 552a) by describing the manner in which computer matching involving Federal agencies could be performed and adding certain protections for individuals applying for and receiving Federal benefits. Section 7201 of the Omnibus Budget Reconciliation Act of 1990 (Pub. L. 101–508) further amended the Privacy Act regarding protections for such individuals. The Privacy Act, as amended, regulates the use of computer matching by Federal agencies when records in a system of records are matched with other Federal, State, or local government records.

It requires agencies involved in computer matching programs to:

(1) Negotiate written agreements with the other agency or agencies participating in the matching programs;

(2) Obtain the Date Integrity Boards' approval of the match agreements;

(3) Furnish detailed reports about matching programs to Congress and OMB;

(4) Notify applicants and beneficiaries that their records are subject to matching; and

(5) Verify match findings before reducing, suspending, terminating, or denying an individual's benefits or payments.

B. SSA Computer Matches Subject to the Privacy Act

We have taken action to ensure that all of SSA's computer matching programs comply with the requirements of the Privacy Act, as amended.

Dated: July 13, 2000.

Susan M. Daniels,

Deputy Commissioner for Disability and Income Security Programs.

Notice of Computer Matching Program, State Courts With the Social Security Administration (SSA)

A. Participating Agencies

SSA and State Courts.

B. Purpose of the Matching Program

To identify individuals who are subject to the title II benefit nonpayment on section 202(x)(1) of the Social Security Act (the Act) affecting prisoners and certain other individuals in the programs administered by SSA and/or are subject to the title XVI supplemental security income (SSI) restrictions in section 1611(e)(1)(A) of the Act applicable to individuals in public institutions under the SSI program which provides payments to recipients with income and resources at or below levels established by law and regulations, and/or are subject to the above provisions of the Act applicable to individuals serving as representative payees on behalf of other entitled beneficiaries.

The matching program is designed to apply to prisoners covered by section 202(x)(1)(A)(i); *i.e.,* individuals confined pursuant to a conviction for an offense punishable by imprisonment for more than a year, regardless of the actual sentence imposed, and any affected individuals covered by the above reference representative payee provisions.

Also included within the terms of this agreement are any other confined individuals covered by the provisions of section 202(x)(1)(A)(ii) and individuals residing in public institutions and are covered by section 1611(e)(1)(A).

C. Authority for Conducting the Matching Program

Under the matching program, SSA will obtain data provided by State Courts under the authority of sections 202(x)(1), 202(x)(3), 1611(e)(1)(A), 1631(e)(1)(B) and 1631(f) of the Social Security Act, codified at 42 U.S.C. §§ 402(x)(1), 402(x)((3), 1382(e)(1)(A), 1383(e)(1)(B) and 1383(f).

D. Categories of Records and Individuals Covered by the Matching Program

On the basis of certain identifying information as provided by SSA to State Courts, State Courts will provide SSA with electronic files containing prisoner data. SSA will then match the Court Agency data with title II and XVI payment information maintained in the Master Beneficiary Record SSA/OSR 60–0090, the Supplemental Security Income Record SSA/OSR 60–0103, the Master File of Social Security Number Holders and SSN Applications SSA/OSR 60–0058, and the Master Representative Payee File SSA/ORSI 60–0222 systems of records.

E. Inclusive Dates of the Match

The matching program shall become effective no sooner than 40 days after notice for the program is sent to Congress and OMB, or 30 days after publication of this notice in the **Federal Register,** whichever date is later. The matching program will continue for 18 months from the effective date and may be extended for an additional 12 months thereafter, if certain conditions are met.

[FR Doc. 00–18949 Filed 7–26–00; 8:45 am]

BILLING CODE 4190–29–M

DEPARTMENT OF STATE

[Public Notice 3373]

Culturally Significant Objects Imported for Exhibition; Determinations: ''The Golden Deer of Eurasia: Scythian and Sarmatian Treasures from the Russian Steppes''

AGENCY: Department of State.

ACTION: Notice

SUMMARY: Notice is hereby given of the following determinations: Pursuant to the authority vested in me by the Act of October 19, 1965 (79 Stat. 985, 22 U.S.C. 2459), the Foreign Affairs Reform and Restructuring Act of 1998 (112 Stat. 2681, *et seq.*), Delegation of Authority No. 234 of October 1, 1999, and Delegation of Authority No. 236 of October 19, 1999, as amended, I hereby determine that the objects to be included in the exhibition ''The Golden Deer of Eurasia: Scythian and Sarmatian Treasures from the Russian Steppes,'' imported from abroad for the temporary exhibition without profit within the United States, are of cultural significance. These objects are imported pursuant to loan agreements with foreign lenders. I also determine that the exhibition or display of the exhibit objects at the Metropolitan Museum of Art, New York, NY from on or about October 10, 2000 to on or about February 4, 2001, is in the national interest. Public Notice of these Determinations is ordered to be published in the **Federal Register.**

FOR FURTHER INFORMATION CONTACT: For further information, including a list of exhibit objects, contact Paul Manning, Attorney-Adviser, Office of the Legal Adviser, U.S. Department of State (telephone: 202/619–5997). The address is U.S. Department of State, SA–44, 301 4th Street, S.W., Room 700, Washington, D.C. 20547–0001.

Dated: July 20, 2000.

Helena Kane Finn,

Acting Assistant Secretary for Educational and Cultural Affairs, Department of State.

[FR Doc. 00–19015 Filed 7–27–00; 8:45 am]

BILLING CODE 4710–08–U

DEPARTMENT OF TRANSPORTATION

Federal Aviation Administration.

Advisory Circular 34–1, Fuel Venting and Exhaust Emissions Requirements for Turbine Engine Powered Airplanes

AGENCY: Federal Aviation Administration.

ACTION: Notice.

SUMMARY: This announces the availability of Advisory Circular AC 34–1, Fuel Venting and Exhaust Emissions Requirements for Turbine Engine Powered Airplanes. Copies may be requested at the address below. A Notice of Availability of the Draft AC 34–1 was issued in the **Federal Register**, dated September 29, 1998. Comments received on the Draft AC have been considered and revisions have been incorporated. These revisions include comments received during a workshop held with the FAA field personnel and Designated Engineering Representatives, and supportive comments, primarily of an editorial nature, from Transport Canada, the United Kingdom Civil Aviation Authority, and the French Director General of Civil Aviation.

ADDRESSES: Copies of FAA AC 34–1 may be requested from: Emissions

Division, AEE–300, Room 902W, Office of Environment and Energy, Federal Aviation Administration, 800 Independence Ave., SW., Washington, DC 20591.

FOR FURTHER INFORMATION CONTACT: Edward McQueen, Emissions Division, AEE–300, Office of Environment and Energy, 800 Independence Ave., S.W., Washington, DC 20591; telephone (202) 267–3560; E-mail: edward.mcqueen@faa.gov

SUPPLEMENTARY INFORMATION: Advisory Circular (AC) 34–1, Fuel Venting and Exhaust Emission Requirements for Turbine Engine Powered Airplanes, has been written to provide section-by-section guidance on 14 CFR Part 34. The AC is intended to provide a better understanding of the provisions of the Part 34, and to facilitate standardized implementation of Part 34 throughout the aviation industry. The AC contains information concerning the standards and requirements for aircraft fuel venting and engine emission certification, and presents explanatory information and guidance. The information contained in the AC also sets forth acceptable means, but not the sole means, by which compliance may be shown with the requirements of Part 34.

In addition to the section-by-section explanations, the AC includes three chapters that explain specific appendices from the International Civil Aviation Organization (ICAO), Annex 16, Volume II, Aircraft Engine Emissions. Since Annex 16 is specifically referenced in Part 34, these chapters are included to make the AC a more complete reference source.

The ICAO appendices deal with detailed technical issues regarding instrumentation and measurement techniques and, as such, are relatively complex. Thus, they have been kept distinct from the rest of the AC as separate chapters. Typically, only those readers who are interested in specific equations and/or details regarding measurement techniques will need to refer to these sections.

A Notice of Availability of the Draft AC 34–1 was issued in the **Federal Register**, dated September 29, 1998, Volume 63, Number 188, Page 51990. Comments received on the Draft AC have been considered and revisions have been incorporated into AC 34–1. These revisions include comments received during a workshop held with the FAA field personnel and Designated Engineering Representatives, and supportive comments, primarily of an editorial nature, from Transport Canada, the United Kingdom Civil Aviation Authority, and the French Director General of Civil Aviation.

AC 34–1 continues to be developed by the FAA, including coordination with the European Joint Aviation Authorities (JAA) and other international authorities. The FAA expects to publish revisions periodically.

Issued in Washington, DC on July 17, 2000.

James D. Erickson,

Director of Environment and Energy.

[FR Doc. 00–19027 Filed 7–26–00; 8:45 am]

BILLING CODE 4910–13–P

DEPARTMENT OF TRANSPORTATION

Federal Aviation Administration

Notice of Intent To Establish an Aircraft Repair and Maintenance Advisory Committee

AGENCY: Federal Aviation Administration (FAA) DOT.

ACTION: Notice.

SUMMARY: This notice announces the intent of the FAA to establish an Aircraft Repair and Maintenance Advisory Committee. This notice also announces the FAA's invitation to interested and qualified persons who wish to be appointed by the Administrator as a member of the committee to submit a letter of interest.

DATES: Requests for appointment as a member of the committee must be submitted on or before September 25, 2000.

FOR FURTHER INFORMATION CONTACT: Russell S. Unangst, Jr., Federal Aviation Administration (AFS–300), 800 Independence Avenue, SW, Washington, DC 20591; phone (202) 267–8844; fax (202) 267–5115; e-mail russell.unangst@faa.gov.

SUPPLEMENTARY INFORMATION:

Background

In accordance with the Wendell H. Ford Aviation Investment and Reform Act for the 21st Century, Public Law 106–81, section 734, the FAA is establishing an advisory committee to review issues related to the use and oversight of aircraft and aviation component repair and maintenance facilities located within, or outside of, the United States. This notice informs the public that the FAA will ask the proposed Aircraft Repair and Maintenance Advisory Committee to provide advice and recommendations to the Secretary of Transportation, through the FAA Administrator, on the following tasks:

(1) The amount and type of aircraft and aviation component repair work that is being performed by air carriers and aircraft repair facilities located within, and outside of, the United States

(2) The staffing needs of those facilities, and

(3) Any balance of trade or safety issues associated with that work.

The advisory committee will afford the FAA additional opportunities to obtain direct, firsthand information and insight from the represented interests meeting and exchanging ideas with respect to proposed rules and existing rules that should be revised or eliminated. The advisory committee will be making recommendations to increase safety through improved oversight of aircraft repair facilities. However, the activities of the committee will not circumvent the normal coordination process or the public rulemaking procedures.

The advisory committee may form working groups to accomplish its tasks. Working groups are expected to comply with the procedures adopted by the advisory committee. All working groups will be composed of individuals having experience in the assigned task.

The advisory committee will consist of at least twelve members, nine of whom shall be appointed by the Administrator as follows:

(a) Three representatives of labor organizations representing aviation mechanics;

(b) One representative of cargo air carriers;

(c) One representative of passenger air carriers;

(d) One representative of aircraft repair facilities;

(e) One representative of aircraft manufacturers;

(f) One representative of on-demand passenger air carriers and corporate aircraft operations; and

(g) One representative of regional passenger air carriers;

The remaining positions on the advisory committee shall consist of a representative from the Department of Commerce, designated by the Secretary of Commerce, a representative from the Department of State, designated by the Secretary of State, and one representative from the Federal Aviation Administration, designed by the Administrator.

Interested persons who wish to be appointed by the Administrator as a member of the Aircraft Repair and Maintenance Advisory Committee should submit a letter of interest to Mr. Russell S. Unangst, Jr. at the Federal Aviation Administration (AFS–310), 800 Independence Avenue, SW.,

Washington, DC 20591; phone (202) 267–8844; fax (202) 267–5115; e-mail russell.unangst@faa.gov. The letter should describe interests in the tasks and state the experience and qualification he or she would bring to the committee. Each person submitting a letter of interest will be advised whether or not his or her request can be accommodated. To the extent possible, the composition of the advisory committee and working groups will be balanced among the aviation interests selected to participate.

Requests for appointment as a member of the advisory committee should be submitted on or before September 25, 2000.

The Secretary of Transportation has determined that the formation and use of advisory committees are necessary and in the public interest in connection with the performance of duties imposed on the FAA by law. Meetings of the Aircraft Repair and Maintenance Advisory Committee will be open to the public. Meetings of the working groups will not be open to the public, except to the extent that individuals or organizations with an interest and expertise are selected to participate. No public announcement of working group meetings will be made.

Issued in Washington, DC, on July 24, 2000.

Angela B. Elgee,

Manager, Continuous Airworthiness Maintenance Division.

[FR Doc. 00–18993 Filed 7–26–00; 8:45 am]

BILLING CODE 4910–13–M

DEPARTMENT OF TRANSPORTATION

Federal Aviation Administration

Notice of Intent To Rule on Application To Use the Revenue from a Passenger Facility Charge (PFC) at San Angelo Regional Airport, San Angelo, TX

AGENCY: Federal Aviation Administration (FAA), DOT.

ACTION: Notice of intent to rule on application.

SUMMARY: The FAA proposes to rule and invites public comment on the application to use the revenue from a PFC at San Angelo Regional Airport under the provisions of the Aviation Safety and Capacity Expansion Act of 1990 (Title IX of the Omnibus Budget Reconciliation Act of 1990) (Public Law 101–508) and Part 158 of the Federal Aviation Regulations (14 CFR part 158).

DATES: Comments must be received on or before August 28, 2000.

ADDRESSES: Comments on this application may be mailed or delivered in triplicate copies to the FAA at the following address: Mr. G. Thomas Wade, Federal Aviation Administration, Southwest Region, Airports Division, Planning and Programming Branch, ASW–611, Fort Worth, Texas 76193–0610.

In addition, one copy of any comments submitted to the FAA must be mailed or delivered to Mr. Arboth A. Rylant, Manager of San Angelo Regional Airport at the following address: Mr. Arboth A. Rylant, Airport Director, San Angelo Regional Airport, 8618 Terminal Circle, Suite 101, San Angelo, TX 76904.

Air carriers and foreign air carriers may submit copies of the written comments previously provided to the Airport under section 158.23 of part 158.

FOR FURTHER INFORMATION CONTACT: Mr. G. Thomas Wade, Federal Aviation Administration, Southwest Region, Airports Division, Planning and Programming Branch, ASW–611, Fort Worth, Texas 76193–0610, (817) 222–5613.

The application may be reviewed in person at this same location.

SUPPLEMENTARY INFORMATION: The FAA proposes to rule and invites public comment on the application to use the revenue from a PFC at San Angelo Regional Airport under the provisions of the Aviation Safety and Capacity Expansion Act of 1990 (Title IX of the Omnibus Budget Reconciliation Act of 1990) (Public Law 101–508) and part 158 of the Federal Aviation Regulations (14 CFR part 158).

On July 11, 2000 the FAA determined that the application to impose and use the revenue from a PFC submitted by the Airport was substantially complete within the requirements of section 158.25 of part 158. The FAA will approve or disapprove the application, in whole or in part, no later than November 2, 2000.

The following is a brief overview of the application.

Total estimated PFC revenue: $96,410.

PFC application number: 00–04–00–SJT.

Brief description of proposed project(s):

Projects To Impose and Use PFC's

1. Acquire Ramp/Runway Sweeper
2. Construct Replacement Aircraft Rescue and Fire Fighting Facility

Any person may inspect the application in person at the FAA office listed above under **FOR FURTHER INFORMATION CONTACT** and at the FAA regional Airports office located at: Federal Aviation Administration, Southwest Region, Airports Division, Planning and Programming Branch, ASW–610, 2601 Meacham Blvd., Fort Worth, Texas 76137–4298.

In addition, any person may, upon request, inspect the application, notice and other documents germane to the application in person at San Angelo Regional Airport.

Issued in Fort Worth, Texas on July 11, 2000.

Naomi L. Saunders,

Manager, Airports Division.

[FR Doc. 00–18992 Filed 7–26–00; 8:45 am]

BILLING CODE 4910–13–M

DEPARTMENT OF TRANSPORTATION

Federal Aviation Administration

Guidance for Demonstrating Compliance With Seat Dynamic Testing for Plinths and Pallets

AGENCY: Federal Aviation Administration (FAA), DOT.

ACTION: Notice of interim means of compliance.

SUMMARY: This notice provides clarification of acceptable interim means for demonstrating compliance with the airworthiness standards for seats mounted on adapter plates of transport category airplanes. It is necessary to give the public guidance in this area and is intended to be used as a means of compliance until the FAA publishes superseding document(s).

FOR FURTHER INFORMATION CONTACT: Federal Aviation Administration, Attention: Jeff Gardlin, Airframe/Cabin Safety Branch, ANM–115, Transport Airplane Directorate, Aircraft Certification Service, 1601 Lind Avenue SW., Renton, WA 98055–4056; telephone (425) 227–2136, facsimile (425) 227–1320.

SUPPLEMENTARY INFORMATION: The information contained in this notice was taken directly from FAA Memorandum No. 00–115–7, dated May 1, 2000.

''The purpose of this memorandum is to transmit acceptable interim means to demonstrate compliance with § 25.562 of the FAR [Federal Aviation Regulations] for seats installed on adapter plates, sometimes referred to as ''plinths'' or ''pallets''.

''The attachment addressed a specific type of installation, for which the guidance contained in Advisory Circular (AC) 25.562–1A [Dynamic Evaluation of Seat Restraint Systems & Occupant Protection on Transport Airplanes], as clarified by Memorandum No. 00–115–3, may not provide sufficient information. Recent installations of multiple single-place seats into adapter plates, with

the adapter plate installed into the airplane seat track (or other structure), have generated questions as to the proper certification procedure. In these cases, no dynamic testing incorporating the adapter plates was performed. The attached guidance addresses that issue.

''This guidance is interim, because additional data are needed to asses the interaction of seats/adapter plates/airframe. However, there are very near term projects where certification criteria are required before such data will be available. This guidance may be used until the FAA publishes a superseding document(s).

''Acceptable Interim Approach for Near Term Executive Interior Deliveries for Multiple Single Seats Mounted to an Adapter-Plate:

''Issue:

''Multiple single seats that are mounted to a single adapter-plate in the aircraft, are being tested to the 16g dynamic load conditions without the adapter-plate. The adapter-plate, which is attached to the aircraft seat tracks and, at times, to other attachment 'hard points', provides the load path to the aircraft structure. As a result of the adapter-plate not being incorporated in the test, it is unknown whether or not the seat-to-adapter-plate attachment, the adapter-plate itself, and the adapter-plate-to-aircraft-structure/seat track attachment are capable of reacting and distributing the seat loads into the aircraft structure.

''It is necessary to ensure that the seat remains attached to the aircraft floor structure under the prescribed 16g dynamic load condition. Failure in any of these load path details may result in a seat becoming detached from the aircraft floor structure. Therefore, the load path between the seat and aircraft floor structure must be shown to be capable of transferring the 16g seat dynamic loads.

''For the load path components between the seat leg attachments and the aircraft seat track or floor fittings, which were not represented/substantiated in the 16g dynamic seat test, a stress analysis of those details, using the peak loads recorded during the 16g dynamic tests, may be performed as *an acceptable interim means* of compliance to § 25.562(b) as provided below. Due to the limited amount of data available to assess the dynamic performance of this particular type of seating installation (seat/adapter-plate), this is interim action until such data are obtained to support policy addressing the subject installations. The FAA has identified that data from tests (to be performed possibly by CAMI) utilizing seats mounted on adapter-plates are needed to support long-term policy and guidance.

''Conditions necessary to use this interim approach are:

''—Each seat type (without adapter) has been dynamically tested in accordance with § 25.562, including pitch and roll.

''—The tested means of attachment is consistent with attachment of the seat to the adapter-plate.

''—Airplane floor warpage is addressed for the adapter-plate installation by providing an adequate number of distributed attachments of the adapter-plate to the airplane floor structure. The number of attachments will depend on the design of the adapter-plate and positioning of the seats on the plate. Typically the number of attachments will exceed the number of seat-to-adapter-plate attachments and shall not be less than the number of seat-to-adapter-plate attachments. The attachments of the adapter-to-aircraft structure must be structurally adequate to accommodate the dynamic loads and floor deformation.

''—Compliance with § 25.561 is achieved.

''If the actual attachment of the seat to the adapter-plate was not represented during the 16g dynamic seat test, it must be shown that the retention of the seat to the adapter-plate will not be compromised when the seat legs are subjected to the required pre-test pitch and roll conditions of § 25.562(b)(2). Testing of this condition may not be necessary if the attachment retention design and strength are shown to be capable of accommodating the dynamic loads and deformations.

''Analysis of load path components not tested:

''—*Analysis of the seat-to-adapter-plate interface.* It Must be shown that the seat/plate attachment is capable of reacting the measured peak 16g seat loads. The analysis must take into account eccentricities of load path and adapter-plate deformations that may induce prying (bending) loads at the attachment.

''—*An analysis of the adapter-plate.* It must be shown that the adapter-plate is capable of transferring the measured 16g peak loads from the seat-to-adapter-plate interface to the interface of the adapter-plate-to-aircraft floor structure (seat track lips and 'hard points').

''—*Analysis of the adapter-plate-to-floor-structure interface.* The aircraft seat track lips must be shown to be capable of reacting the measured peak 16g seat test load as distributed by the adapter-plate from the seats. The analysis must take into account eccentricities of load path and adapter-plate deformations that may induce prying (bending) loads at the attachment. In the case of hard point installations, the interface would be taken to the point at which the hard point interfaces with the aircraft floor structure (*e.g.,* floor beam).

Note: If a positive margin of safety cannot be achieved in the above analysis, either testing of the seat with the adapter-plate or redesign of the deficient interfaces will be required for compliance to § 25.562.

''If the actual seat/plate/aircraft-floor structure installation is planned to be tested, but the rigidity of the adapter-plate precludes the pre-test floor deformation condition from being performed, segments of the adapter-plate can be used for the interface between the seat and aircraft seat track section. This is in lieu of using the full plate. This will require however, that multiple attachments of the adapter-plate to the aircraft floor structure be provided. The intention of providing multiple distributed attachments is to indirectly address the potential deformation between the airplane floor structure and the plate. The number of attachments will depend on the design of the adapter-plate and positioning of the seats on the adapter-plate. The attachments of the adapter-plate-to-aircraft structure must be structurally adequate to accommodate the aircraft floor deformation.

''The FAA is also preparing a policy statement on the broader issue of compatibility of the seat installation with the airframe. This future policy statement will address this issue, and others, where they may be a question of the dynamic performance of the seat producing loads that exceed the structural capability of the airframe.''

Issued in Renton, Washington on July 14, 2000.

Donald L. Riggin,

Acting Manager, Transport Airplane Directorate, Aircraft Certification Service, ANM–100.

[FR Doc. 00–18991 Filed 7–26–00; 8:45 am]

BILLING CODE 4910–13–M

DEPARTMENT OF TRANSPORTATION

Federal Aviation Administration

Guidance for Demonstrating Compliance With Seat Dynamic Testing for Plinths and Pallets

AGENCY: Federal Aviation Administration (FAA), DOT.

ACTION: Notice of additional clarification on an acceptable means of compliance.

SUMMARY: This notice provides additional clarification on an acceptable means for demonstrating compliance with the airworthiness standards for seats installed on ''plinths'' and ''pallets'' of transport category airplanes. It is necessary to give the public guidance in this area and is intended to further explain the guidance contained in AC 25.562–1A and promote greater standardization and equal treatment among applicants.

FOR FURTHER INFORMATION CONTACT: Federal Aviation Administration, Attention: Jeff Gardlin, Airframe/Cabin Safety Branch, ANM–115, Transport Airplane Directorate, Aircraft Certification Service, 1601 Lind Avenue SW., Renton WA 98055–4056; telephone (425) 227–2136, facsimile (425 227–1320.

SUPPLEMENTARY INFORMATION: The information contained in this notice was taken directly from FAA Memorandum No. 00–115–3, dated February 22, 2000.

''The purpose of this memorandum is to provide additional clarification on acceptable means to demonstrate compliance with § 25.562, of the FAR [Federal Aviation Regulations] for seats installed on ''plinths'' and ''pallets.'' Abbreviated criteria for testing plinths and pallets are given in paragraph 10.e., of Advisory Circular (AC) 25.562–1A [Dynamic Evaluation of Seat Restraint

Systems & Occupant Protection on Transport Airplanes].

''The issue of plinths versus pallets was raised in the Aviation Rulemaking Advisory Committee seat test harmonization working group that helped develop the revised AC and was considered, at the time, to be of relatively minor importance. Thus, a simple procedure was included in lieu of a detailed discussion of the underlying rationale for the criteria in the AC. However it now appears that the frequency of plinth and pallet installations is increasing, and the simple criteria in the AC are not always sufficient to address the design variations that are being presented for certification. This memorandum is intended to provide further explanation of the guidance contained in the AC and promote greater standardization and equal treatment among applicants.

''In order to clarify the appropriate certification procedures for plinths and pallets, a brief review of the regulation is needed. Section 25.562(b)(2) requires that the seat be subjected to a prescribed 16g dynamic impulse, with the points of attachment (floor rails or fitting) misaligned with respect to each other. The misalignment is intended to address local distortion between the seat and airplane floor. A lack of tolerance to local distortion has been a primary cause of seat attachment failures, and a fundamental object of the regulation is to provide for improved retention of seats. Based on accident and research data, the interface between the seat and airplane has been identified as critical and the regulation requires that interface to be tested to the prescribed 16g dynamic impulse. The basic airplane follow structure beyond the interface (beams, intercostal etc.) is not required to be dynamically tested or demonstrated to tolerate misalignment. In the case of seats that do not attach directly to the airplane seat track (or equivalent), there is a need to establish the critical interface.

''The Advisory circular characterizes a plinth as an adapter used to attach a single seat to the floor, and gives an example of a pallet as an adapter used to attach multiple rows of seats. If the seat is essentially connected to the seat track via an adapter, the adapter is functionally part of the seat, and certification testing should take this into account. In that case, the seat and its adapter would be tested dynamically, with the misalignment required by the regulation imposed at the interface of the adapter and the floor.

''On the other hand, if seats were installed into the airplane with an adapter(s) such that the adapter(s) was effectively part of the airplane floor, then the critical interface would be between that seat and the adapter. In that case, the dynamic tests would include the seat and its attachment to the adapter, with the misalignment imposed on that interface.

“In order to give a simple characterization of the two situations, the AC refers to single seats and multiple row seats. The term 'single seat,', as used in the AC, was intended to refer to a seat assembly, which could be as large as five seat places.However, the rationale behind this characterization was that a single seat adapter would be considered a plinth, by virtue of its size and purpose, and therefore a part of the seat. Conversely, a multiple row seat installation was considered sufficiently large that the adapter would have to be a pallet, and therefore part of the floor.

''Nonetheless, using the rationale discussed above, there exists the potential for large plinths and small pallets. The issue is whether the critical interface is between the seat and the adapter, or between the adapter and the airplane. Generally speaking adapters of the size that contain a single row of seats (whether they are individual seat places or a common assembly) and mount into seat tracks, should be treated as part of the seat for purposes of certification in accordance with § 25.562. Larger, or more integrally mounted, adapters should be assessed to determine whether they should be treated as part of the floor for purposes of certification in accordance with § 25.561.''

Issued in Renton, Washington on July 14, 2000.

Donald L. Riggin,

Acting Manager, Transport Airplane Directorate, Aircraft Certification Service, ANM–100.

[FR Doc. 00–18994 Filed 7–26–00; 8:45 am]

BILLING CODE 4910–13–M

DEPARTMENT OF TRANSPORTATION

Surface Transportation Board

[STB Docket No. AB–567 and AB–568 (Sub–No. 1X)]

Rutherford Railroad Development Corporation—Abandonment Exemption—in Rutherford County, NC and Southeast Shortlines, Inc., d/b/a Thermal Belt Railway—Discontinuance of Service Exemption—in Rutherford County, NC

Rutherford Railroad Development Corporation (RRDC) and Southeast Shortlines, Inc., d/b/a Thermal Belt Railway (TBRY) have filed a notice of exemption under 49 CFR 1152 Subpart F—Exempt Abandonments and Discontinuances for RRDC to abandon and TBRY to discontinue service over a 7.87-mile line between milepost SB–180.47 in Spindale and milepost SB–188.34 near Gilkey in Rutherford County, NC.[1] The line traverses United States Postal Service Zip Codes 28160 and 28139.

RRDC and TBRY have certified that: (1) No local traffic has moved over the line for at least 2 years; (2) any overhead traffic on the line can be rerouted over other lines; (3) no formal complaint filed by a user of rail service on the line (or by a state or local government entity acting on behalf of such user) regarding cessation of service over the line either is pending with the Surface Transportation Board (Board) or with any U.S. District Court or has been decided in favor of complainant within the 2-year period; and (4) the requirements at 49 CFR 1105.7 (environmental reports), 49 CFR 1105.8 (historic reports), 49 CFR 1105.11 (transmittal letter), 49 CFR 1105.12 (newspaper publication), and 49 CFR 1152.50(d)(1) (notice to governmental agencies) have been met.

As a condition to these exemptions, any employee adversely affected by the abandonment or discontinuance shall be protected under *Oregon Short Line R. Co.— Abandonment—Goshen,* 360 I.C.C. 91 (1979). To address whether this condition adequately protects affected employees, a petition for partial revocation under 49 U.S.C. 10502(d) must be filed. Provided no formal expression of intent to file an offer of financial assistance (OFA) has been received, the exemptions will be effective on August 26, 2000, unless stayed pending reconsideration. Petitions to stay that do not involve environmental issues,[2] formal expressions of intent to file an OFA under 49 CFR 1152.27(c)(2),[3] and trail use/rail banking requests under 49 CFR 1152.29 must be filed by August 7, 2000. Petitions to reopen or requests for public use conditions under 49 CFR 1152.28 must be filed by August 16, 2000, with: Surface Transportation Board, Office of the Secretary, Case Control Unit, 1925 K Street, NW., Washington, DC 20423.

A copy of any petition filed with the Board should be sent to applicant's representative: Fritz R. Kahn, P.C., 1920 N Street, NW., Washington, DC 20036–1601.

If the verified notice contains false or misleading information, the exemption is void *ab initio.*

---

[1] TBRY's lease and operation of the involved line was approved in *Southeast Shortlines, Inc.,* d/b/a Thermal Belt Railway—Lease, Operation and Acquisition Exemption—*A Rail Line in Rutherford, NC,* Finance Docket No. 31484 (ICC served June 22, 1989).

The Bechtler Development Corporation (BDC) filed a request for a notice of interim trail use for the entire line pursuant to section 8(d) of the National Trails System Act, 16 U.S.C. 1247(d). The Board will address BDC's trail use request and any others that may be filed in a subsequent decision.

[2] The Board will grant a stay if an informed decision on environmental issues (whether raised by a party or by the Board's Section of Environmental Analysis in its independent investigation) cannot be made before the exemption's effective date. *See Exemption of Out-of-Service Rail Lines,* 5 I.C.C.2d 377 (1989). Any request for a stay should be filed as soon as possible so that the Board may take appropriate action before the exemption's effective date.

[3] Each offer of financial assistance must be accompanied by the filing fee, which currently is set at $1000. *See* 49 CFR 1002.2(f)(25).

RRDC and TBRY have filed an environmental report which addresses the effects of the abandonment and discontinuance, if any, on the environment and historic resources. The Section of Environmental Analysis (SEA) will issue an environmental assessment (EA) by August 1, 2000. Interested persons may obtain a copy of the EA by writing to SEA (Room 500, Surface Transportation Board, Washington, DC 20423) or by calling SEA, at (202) 565–1545. Comments on environmental and historic preservation matters must be filed within 15 days after the EA becomes available to the public.

Environmental, historic preservation, public use, or trail use/rail banking conditions will be imposed, where appropriate, in a subsequent decision.

Pursuant to the provisions of 49 CFR 1152.29(e)(2), RRDC shall file a notice of consummation with the Board to signify that it has exercised the authority granted and fully abandoned the line. If consummation has not been effected by RRDC's filing of a notice of consummation by July 27, 2001, and there are no legal or regulatory barriers to consummation, the authority to abandon will automatically expire.

Board decisions and notices are available on our website at ''WWW.STB.DOT.GOV.''

Decided: July 19, 2000.

By the Board, David M. Konschnik, Director, Office of Proceedings.

Vernon A. Williams,

Secretary.

[FR Doc. 00–18801 Filed 7–26–00; 8:45 am]

BILLING CODE 4915–01–P

DEPARTMENT OF THE TREASURY

Submission for OMB Review; Comment Request

July 20, 2000.

The Department of Treasury has submitted the following public information collection requirement(s) to OMB for review and clearance under the Paperwork Reduction Act of 1995, Public Law 104–13. Copies of the submission(s) may be obtained by calling the Treasury Bureau Clearance Officer listed. Comments regarding this information collection should be addressed to the OMB reviewer listed and to the Treasury Department Clearance Officer, Department of the Treasury, Room 2110, 1425 New York Avenue, NW., Washington, DC 20220.

DATES: Written comments should be received on or before August 28, 2000, to be assured of consideration.

U.S. Customs Service (CUS)

OMB Number: New.

Form Number: Customs Form 6043.

Type of Review: New collection.

Title: Delivery Ticket.

Description: This information collection ensures that Customs uniform, national procedures for approving and operating warehouses receiving and controlling general order merchandise are followed.

Respondents: Individuals or households, Business or other for-profit, Not-for-profit institutions.

Estimated Number of Respondents: 200.

Estimated Burden Hours Per Respondent: 20 minutes.

Frequency of Response: On occasion.

Estimated Total Reporting Burden: 6,600 hours.

Clearance Officer: J. Edgar Nichols (202) 927–1426, U.S. Customs Service, Information Services Branch, Ronald Reagan Building, 1300 Pennsylvania Avenue, NW., Room 3.2.C, Washington, DC 20229.

OMB Reviewer: Alexander T. Hunt (202) 395–7860, Office of Management and Budget, Room 10202, New Executive Office Building, Washington, DC 20503.

Lois K. Holland,

Departmental Reports Management Officer.

[FR Doc. 00–18958 Filed 7–26–00; 8:45 am]

BILLING CODE 4820–02–U

DEPARTMENT OF THE TREASURY

Submission for OMB Review; Comment Request

July 20, 2000.

The Department of Treasury has submitted the following public information collection requirement(s) to OMB for review and clearance under the Paperwork Reduction Act of 1995, Public Law 104–13. Copies of the submission(s) may be obtained by calling the Treasury Bureau Clearance Officer listed. Comments regarding this information collection should be addressed to the OMB reviewer listed and to the Treasury Department Clearance Officer, Department of the Treasury, Room 2110, 1425 New York Avenue, NW., Washington, DC 20220.

DATES: Written comments should be received on or before August 28, 2000, to be assured of consideration.

Internal Revenue Service (IRS)

OMB Number: 1545–0144.

Form Number: IRS Form 2438.

Type of Review: Extension.

Title: Undistributed Capital Gains Tax Return.

Description: Form 2438 is used by regulated investment companies to figure capital gains tax on undistributed capital gains designated under Internal Revenue Code (IRC) section 852(b)3(D). IRS uses this information to determine the correct tax.

Respondents: Business or other for-profit.

Estimated Number of Respondents/Recordkeepers: 100.

Estimated Burden Hours Per Respondent/Recordkeeper:

Recordkeeping—7 hr., 39 min.
Learning about the law or the form—24 min.
Preparing and sending the form to the IRS—32 min.

Frequency of Response: Annually.

Estimated Total Reporting/Recordkeeping Burden: 859 hours.

OMB Number: 1545–0228.

Form Number: IRS Form 6252.

Type of Review: Extension.

Title: Installment Sale Income.

Description: Information is needed to figure and report an installment sale for a casual or incidental sale of personal property, and a sale of real property by someone not in the business of selling real estate. Data is used to determine whether the installment sale has been properly reported and the correct amount of profit is included in income on the taxpayer's return.

Respondents: Business or other for-profit, Individuals or households, Not-for-profit institutions, Farms.

Estimated Number of Respondents/Recordkeepers: 782,848.

Estimated Burden Hours Per Respondent/Recordkeeper:

Recordkeeping—1 hr., 18 min.
Learning about the law or the form—24 min.
Preparing the form—1 hr., 0 min.
Copying, assembling, and sending the form to the IRS—20 min.

Frequency of Response: Annually.

Estimated Total Reporting/Recordkeeping Burden: 2,395,515 hours.

OMB Number: 1545–0940.

Regulation Project Number: LR–185–84 Final.

Type of Review: Extension.

Title: Election of $10 Million Limitation on Exempt Small Issues of Industrial Development Bonds; Supplemental Capital Expenditure Statements.

Description: The regulation liberalizes the procedure by which the state or local government issuer of an exempt small issue of tax-exempt bonds elects the $10 million limitation upon the size of such issue and deletes the requirement to file certain supplemental capital expenditure statements.

Respondents: State, Local or Tribal Government.

Estimated Number of Recordkeepers: 10,000.

Estimated Burden Hours Per Recordkeeper: 6 minutes.

Estimated Total Recordkeeping Burden: 1,000 hours.

Clearance Officer: Garrick Shear, Internal Revenue Service, Room 5244, 1111 Constitution Avenue, NW, Washington, DC 20224.

OMB Reviewer: Alexander T. Hunt (202) 395–7860, Office of Management and Budget, Room 10202, New Executive Office Building, Washington, DC 20503.

Lois K. Holland,

Departmental Reports Management Officer.

[FR Doc. 00–18959 Filed 7–26–00; 8:45 am]

BILLING CODE 4830–01–U

Federal Register

Thursday,
July 27, 2000

Part II

Department of Transportation

Federal Aviation Administration

14 CFR Part 39

Airworthiness Directives; Rule and Proposed Rules

DEPARTMENT OF TRANSPORTATION

Federal Aviation Administration

14 CFR Part 39

[Docket No. 2000–NM–30–AD; Amendment 39–11829; AD 2000–14–18]

RIN 2120–AA64

Airworthiness Directives; McDonnell Douglas Model MD–11 Series Airplanes

AGENCY: Federal Aviation Administration, DOT.

ACTION: Final rule; request for comments.

SUMMARY: This amendment adopts a new airworthiness directive (AD), applicable to certain McDonnell Douglas Model MD–11 series airplanes. This action requires an inspection of the powered drive unit power wires within three feet of each affected powered drive unit termination for mechanical damage; and repair, if necessary. This action also requires revising the wire harnesses; splicing any additional length wire; routing and installing parts; and replacing the floor panels with new and retained floor panels. This action is necessary to ensure that the powered roller pans are positioned properly. Improperly positioned powered roller pans could pierce a powered roller wire harness and cause sparking that could ignite adjacent insulation material, which could result in smoke and fire in the center cargo compartment of the airplane. This action is intended to address the identified unsafe condition.

DATES: Effective August 11, 2000.

The incorporation by reference of certain publications listed in the regulations is approved by the Director of the Federal Register as of August 11, 2000.

Comments for inclusion in the Rules Docket must be received on or before September 25, 2000.

ADDRESSES: Submit comments in triplicate to the Federal Aviation Administration (FAA), Transport Airplane Directorate, ANM–114, Attention: Rules Docket No. 2000–NM–30–AD, 1601 Lind Avenue, SW., Renton, Washington 98055–4056. Comments may be inspected at this location between 9 a.m. and 3 p.m., Monday through Friday, except Federal holidays. Comments may be submitted via fax to (425) 227–1232. Comments may also be sent via the Internet using the following address: 9-anm-iarcomment@faa.gov. Comments sent via fax or the Internet must contain ''Docket No. 2000–NM–30–AD'' in the subject line and need not be submitted in triplicate. Comments sent via the Internet as attached electronic files must be formatted in Microsoft Word 97 for Windows or ASCII text.

The service information referenced in this AD may be obtained from Boeing Commercial Aircraft Group, Long Beach Division, 3855 Lakewood Boulevard, Long Beach, California 90846, Attention: Technical Publications Business Administration, Dept. C1–L51 (2–60). This information may be examined at the FAA, Transport Airplane Directorate, 1601 Lind Avenue, SW., Renton, Washington; or at the FAA, Transport Airplane Directorate, Los Angeles Aircraft Certification Office, 3960 Paramount Boulevard, Lakewood, California; or at the Office of the Federal Register, 800 North Capitol Street, NW., suite 700, Washington, DC.

FOR FURTHER INFORMATION CONTACT: Brett Portwood, Technical Specialist, Systems Safety and Integration, Systems and Equipment Branch, ANM–130L, FAA, Transport Airplane Directorate, Los Angeles Aircraft Certification Office, 3960 Paramount Boulevard, Lakewood, California 90712–4137; telephone (562) 627–5350; fax (562) 627–5210.

SUPPLEMENTARY INFORMATION: As part of its practice of re-examining all aspects of the service experience of a particular aircraft whenever an accident occurs, the FAA has become aware of an incident in which a fire occurred in the center cargo compartment during loading on a McDonnell Douglas Model MD–11 series airplane. Investigation has revealed that a powered roller pan attach screw had pierced a powered roller wire harness and caused sparking that resulted in the ignition of adjacent insulation material. The cause of such piercing was attributed to powered roller pans that were incorrectly positioned during production of the airplane, which resulted in a mismatch between the roller pan and wire harness. This condition, if not corrected, could result in smoke and fire in the center cargo compartment of the airplane.

This incident is not considered to be related to a recent accident that occurred off the coast of Nova Scotia involving a McDonnell Douglas Model MD–11 series airplane. The cause of that accident is still under investigation.

Explanation of Relevant Service Information

Boeing has issued McDonnell Douglas Service Bulletin MD11–25A227, dated January 27, 2000, which describes procedures for a one-time general visual inspection of the powered drive unit power wires within three feet of each affected powered drive unit termination for mechanical damage; and repair, if necessary. The service bulletin also describes procedures for revising the wire harnesses; splicing any additional length wire; routing and installing parts; and replacing the floor panels with new and retained floor panels. Accomplishment of the actions specified in the service bulletin is intended to adequately address the identified unsafe condition.

Explanation of Requirements of the Rule

Since an unsafe condition has been identified that is likely to exist or develop on other airplanes of the same type design, this AD is being issued to ensure that the powered roller pans are positioned properly. Improperly positioned powered roller pans could pierce a powered roller wire harness and cause sparking that could ignite adjacent insulation material, which could result in smoke and fire in the center cargo compartment of the airplane. This AD requires accomplishment of the actions specified in the service bulletin described previously.

Cost Impact

None of the Model MD–11 series airplanes affected by this action are on the U.S. Register. All airplanes included in the applicability of this rule currently are operated by non-U.S. operators under foreign registry; therefore, they are not directly affected by this AD action. However, the FAA considers that this rule is necessary to ensure that the unsafe condition is addressed in the event that any of these subject airplanes are imported and placed on the U.S. Register in the future.

Should an affected airplane be imported and placed on the U.S. Register in the future, it would require approximately between 2 and 3 work hours (depending on the configuration of the airplane) to accomplish the required actions, at an average labor rate of $60 per work hour. Parts will be supplied by the manufacturer at no cost to the operators. Based on these figures, the cost impact of this AD would be between $120 and $180 per airplane. However, the FAA has been advised that manufacturer warranty remedies are available for labor costs associated with accomplishing the actions required by this AD. Therefore, the future economic cost impact of this rule on U.S. operators may be less than the cost impact figure indicated above.

Determination of Rule's Effective Date

Since this AD action does not affect any airplane that is currently on the U.S. register, it has no adverse economic impact and imposes no additional burden on any person. Therefore, prior notice and public procedures hereon are unnecessary and the amendment may be made effective in less than 30 days after publication in the **Federal Register.**

Comments Invited

Although this action is in the form of a final rule and was not preceded by notice and opportunity for public comment, comments are invited on this rule. Interested persons are invited to comment on this rule by submitting such written data, views, or arguments as they may desire. Communications shall identify the Rules Docket number and be submitted in triplicate to the address specified under the caption **ADDRESSES.** All communications received on or before the closing date for comments will be considered, and this rule may be amended in light of the comments received. Factual information that supports the commenter's ideas and suggestions is extremely helpful in evaluating the effectiveness of the AD action and determining whether additional rulemaking action would be needed.

Submit comments using the following format:

- Organize comments issue-by-issue. For example, discuss a request to change the compliance time and a request to change the service bulletin reference as two separate issues.
- For each issue, state what specific change to the AD is being requested.
- Include justification (*e.g.*, reasons or data) for each request.

Comments are specifically invited on the overall regulatory, economic, environmental, and energy aspects of the rule that might suggest a need to modify the rule. All comments submitted will be available, both before and after the closing date for comments, in the Rules Docket for examination by interested persons. A report that summarizes each FAA-public contact concerned with the substance of this AD will be filed in the Rules Docket.

Commenters wishing the FAA to acknowledge receipt of their comments submitted in response to this rule must submit a self-addressed, stamped postcard on which the following statement is made: ''Comments to Docket Number 2000–NM–30–AD.'' The postcard will be date stamped and returned to the commenter.

Regulatory Impact

The regulations adopted herein will not have a substantial direct effect on the States, on the relationship between the national Government and the States, or on the distribution of power and responsibilities among the various levels of government. Therefore, it is determined that this final rule does not have federalism implications under Executive Order 13132.

For the reasons discussed above, I certify that this action (1) Is not a ''significant regulatory action'' under Executive Order 12866; (2) is not a ''significant rule'' under DOT Regulatory Policies and Procedures (44 FR 11034, February 26, 1979); and (3) will not have a significant economic impact, positive or negative, on a substantial number of small entities under the criteria of the Regulatory Flexibility Act. A final evaluation has been prepared for this action and it is contained in the Rules Docket. A copy of it may be obtained from the Rules Docket at the location provided under the caption **ADDRESSES.**

List of Subjects in 14 CFR Part 39

Air transportation, Aircraft, Aviation safety, Incorporation by reference, Safety.

Adoption of the Amendment

Accordingly, pursuant to the authority delegated to me by the Administrator, the Federal Aviation Administration amends part 39 of the Federal Aviation Regulations (14 CFR part 39) as follows:

PART 39—AIRWORTHINESS DIRECTIVES

1. The authority citation for part 39 continues to read as follows:

Authority: 49 U.S.C. 106(g), 40113, 44701.

§ 39.13 [Amended]

2. Section 39.13 is amended by adding the following new airworthiness directive:

2000–14–18 McDonnell Douglas: Amendment 39–11829. Docket 2000–NM–30–AD.

Applicability: Model MD–11 series airplanes, as listed in McDonnell Douglas Service Bulletin MD11–25A227, dated January 27, 2000; certificated in any category.

Note 1: This AD applies to each airplane identified in the preceding applicability provision, regardless of whether it has been modified, altered, or repaired in the area subject to the requirements of this AD. For airplanes that have been modified, altered, or repaired so that the performance of the requirements of this AD is affected, the owner/operator must request approval for an alternative method of compliance in accordance with paragraph (b) of this AD. The request should include an assessment of the effect of the modification, alteration, or repair on the unsafe condition addressed by this AD; and, if the unsafe condition has not been eliminated, the request should include specific proposed actions to address it.

Compliance: Required as indicated, unless accomplished previously.

To ensure that the powered roller pans are positioned properly, accomplish the following:

(a) Within 18 months after the effective date of this AD, accomplish the actions specified in paragraphs (a)(1), (a)(2), and (a)(3) of this AD in accordance with McDonnell Douglas Service Bulletin MD11–25A227, dated January 27, 2000.

Inspection

(1) Perform a general visual inspection of the powered drive unit power wires within three feet of each affected powered drive unit termination for mechanical damage. If any damaged wire is detected, prior to further flight, repair the damaged wire.

Note 2: For the purposes of this AD, a general visual inspection is defined as ''A visual examination of an interior or exterior area, installation, or assembly to detect obvious damage, failure, or irregularity. This level of inspection is made under normally available lighting conditions such as daylight, hangar lighting, flashlight, or drop-light, and may require removal or opening of access panels or doors. Stands, ladders, or platforms may be required to gain proximity to the area being checked.''

Revise Wire Harnesses, Splice Wire, and Route and Install Parts

(2) Revise the wire harnesses, splice any additional length wire, and route and install parts.

Replacement

(3) Replace the floor panels with new and retained floor panels.

Alternative Methods of Compliance

(b) An alternative method of compliance or adjustment of the compliance time that provides an acceptable level of safety may be used if approved by the Manager, Los Angeles Aircraft Certification Office (ACO), FAA, Transport Airplane Directorate. Operators shall submit their requests through an appropriate FAA Principal Maintenance Inspector, who may add comments and then send it to the Manager, Los Angeles ACO.

Note 3: Information concerning the existence of approved alternative methods of compliance with this AD, if any, may be obtained from the Los Angeles ACO.

Special Flight Permits

(c) Special flight permits may be issued in accordance with sections 21.197 and 21.199 of the Federal Aviation Regulations (14 CFR 21.197 and 21.199) to operate the airplane to a location where the requirements of this AD can be accomplished.

Incorporation by Reference

(d) The actions shall be done in accordance with McDonnell Douglas Service Bulletin MD11–25A227, dated January 27, 2000. This incorporation by reference was approved by the Director of the Federal Register in accordance with 5 U.S.C. 552(a) and 1 CFR part 51. Copies may be obtained from Boeing Commercial Aircraft Group, Long Beach Division, 3855 Lakewood Boulevard, Long Beach, California 90846, Attention: Technical Publications Business Administration, Dept. C1–L51 (2–60). Copies may be inspected at the FAA, Transport Airplane Directorate, 1601 Lind Avenue, SW., Renton, Washington; or at the FAA, Transport Airplane Directorate, Los Angeles Aircraft Certification Office, 3960 Paramount Boulevard, Lakewood, California; or at the Office of the Federal Register, 800 North Capitol Street, NW., suite 700, Washington, DC.

Effective Date

(e) This amendment becomes effective on August 11, 2000.

Issued in Renton, Washington, on July 14, 2000.

Donald L. Riggin,

Acting Manager, Transport Airplane Directorate, Aircraft Certification Service.

[FR Doc. 00–18392 Filed 7–26–00; 8:45 am]

BILLING CODE 4910–13–U

DEPARTMENT OF TRANSPORTATION

Federal Aviation Administration

14 CFR Part 39

[Docket No. 2000–NM–28–AD]

RIN 2120–AA64

Airworthiness Directives; McDonnell Douglas Model MD–11 Series Airplanes

AGENCY: Federal Aviation Administration, DOT.

ACTION: Notice of proposed rulemaking (NPRM).

SUMMARY: This document proposes the adoption of a new airworthiness directive (AD) that is applicable to certain McDonnell Douglas Model MD–11 series airplanes. This proposal would require modification of the insulation blankets in the area surrounding the main external power ground studs. This action is necessary to prevent smoke and fire in the forward cargo compartment due to burn damage to the insulation blankets in the area surrounding the main external power ground studs. This action is intended to address the identified unsafe condition.

DATES: Comments must be received by September 11, 2000.

ADDRESSES: Submit comments in triplicate to the Federal Aviation Administration (FAA), Transport Airplane Directorate, ANM–114, Attention: Rules Docket No. 2000–NM–28–AD, 1601 Lind Avenue, SW., Renton, Washington 98055–4056. Comments may be inspected at this location between 9 a.m. and 3 p.m., Monday through Friday, except Federal holidays. Comments may be submitted via fax to (425) 227–1232. Comments may also be sent via the Internet using the following address: 9-anm-nprmcomment@faa.gov. Comments sent via fax or the Internet must contain ''Docket No. 2000–NM–28–AD'' in the subject line and need not be submitted in triplicate. Comments sent via the Internet as attached electronic files must be formatted in Microsoft Word 97 for Windows or ASCII text.

The service information referenced in the proposed rule may be obtained from Boeing Commercial Aircraft Group, Long Beach Division, 3855 Lakewood Boulevard, Long Beach, California 90846, Attention: Technical Publications Business Administration, Dept. C1–L51 (2–60). This information may be examined at the FAA, Transport Airplane Directorate, 1601 Lind Avenue, SW., Renton, Washington; or at the FAA, Transport Airplane Directorate, Los Angeles Aircraft Certification Office, 3960 Paramount Boulevard, Lakewood, California.

FOR FURTHER INFORMATION CONTACT: Brett Portwood, Aerospace Engineer, Systems and Equipment Branch, ANM–130L, FAA, Transport Airplane Directorate, Los Angeles Aircraft Certification Office, 3960 Paramount Boulevard, Lakewood, California 90712–4137; telephone (562) 627–5350; fax (562) 627–5210.

SUPPLEMENTARY INFORMATION:

Comments Invited

Interested persons are invited to participate in the making of the proposed rule by submitting such written data, views, or arguments as they may desire. Communications shall identify the Rules Docket number and be submitted in triplicate to the address specified above. All communications received on or before the closing date for comments, specified above, will be considered before taking action on the proposed rule. The proposals contained in this notice may be changed in light of the comments received.

Submit comments using the following format:

- Organize comments issue-by-issue. For example, discuss a request to change the compliance time and a request to change the service bulletin reference as two separate issues.
- For each issue, state what specific change to the proposed AD is being requested.
- Include justification (*e.g.,* reasons or data) for each request.

Comments are specifically invited on the overall regulatory, economic, environmental, and energy aspects of the proposed rule. All comments submitted will be available, both before and after the closing date for comments, in the Rules Docket for examination by interested persons. A report summarizing each FAA-public contact concerned with the substance of this proposal will be filed in the Rules Docket.

Commenters wishing the FAA to acknowledge receipt of their comments submitted in response to this notice must submit a self-addressed, stamped postcard on which the following statement is made: ''Comments to Docket Number 2000–NM–28–AD.'' The postcard will be date stamped and returned to the commenter.

Availability of NPRMs

Any person may obtain a copy of this NPRM by submitting a request to the FAA, Transport Airplane Directorate, ANM–114, Attention: Rules Docket No. 2000–NM–28–AD, 1601 Lind Avenue, SW., Renton, Washington 98055–4056.

Discussion

As part of its practice of re-examining all aspects of the service experience of a particular aircraft whenever an accident occurs, the FAA has become aware of an instance in which burn damage of insulation blankets was found in the areas surrounding the main external and the ground wire attach points of the galley power receptacle. That incident occurred on a McDonnell Douglas Model MD–11 series airplane. The cause of that burn damage has been attributed to loose ground stud attach hardware. This condition, if not corrected, could result in smoke and fire in the forward cargo compartment.

This unsafe condition is not considered to be related to an accident that occurred off the coast of Nova Scotia involving a McDonnell Douglas Model MD–11 series airplane. The cause of that accident is still under investigation.

Other Related Rulemaking

To address the unsafe condition of loose ground stud attach hardware, the FAA issued AD 95–25–04 on November 28, 1995 (61 FR 691, January 10, 1996). That AD requires an inspection and certain other actions to ensure that the ground stud assemblies at three locations of the airplane are installed properly and torqued to certain specifications. That AD also requires verification of the integrity of the components of the ground stud assemblies, inspection to detect heat damage in adjacent areas, and correction of any discrepancy. The actions required by that AD are intended to ensure that the ground stud assemblies are attached correctly so that arcing will not occur.

The FAA, in conjunction with Boeing and operators of Model MD–11 series airplanes, is continuing to review all aspects of the service history of those airplanes to identify potential unsafe conditions and to take appropriate corrective actions. This proposed airworthiness directive (AD) is one of a series of actions identified during that process. The process is continuing and the FAA may consider additional rulemaking actions as further results of the review become available.

Explanation of Relevant Service Information

The FAA has reviewed and approved McDonnell Douglas Alert Service Bulletin MD11–25A187, Revision 01, dated January 5, 2000, which describes a modification that cuts the insulation

blankets in the area surrounding the main external power ground studs in the forward cargo compartment at fuselage station Y=613.000. Such modification of the insulation blankets is intended to minimize the possibility of burn damage to the insulation blankets.

Explanation of Requirements of Proposed Rule

Since an unsafe condition has been identified that is likely to exist or develop on other products of this same type design, the proposed AD would require a modification that cuts the insulation blankets in the area surrounding the main external power ground studs in the forward cargo compartment at fuselage station Y=613.000. The actions would be required to be accomplished in accordance with the service bulletin described previously.

Cost Impact

There are approximately 137 Model MD–11 series airplanes of the affected design in the worldwide fleet. The FAA estimates that 28 airplanes of U.S. registry would be affected by this proposed AD, that it would take approximately 2 work hours per airplane to accomplish the proposed actions, and that the average labor rate is $60 per work hour. Based on these figures, the cost impact of the proposed AD on U.S. operators is estimated to be $3,360, or $120 per airplane.

The cost impact figure discussed above is based on assumptions that no operator has yet accomplished any of the proposed requirements of this AD action, and that no operator would accomplish those actions in the future if this proposed AD were not adopted. The cost impact figures discussed in AD rulemaking actions represent only the time necessary to perform the specific actions actually required by the AD. These figures typically do not include incidental costs, such as the time required to gain access and close up, planning time, or time necessitated by other administrative actions.

Regulatory Impact

The regulations proposed herein would not have a substantial direct effect on the States, on the relationship between the national Government and the States, or on the distribution of power and responsibilities among the various levels of government. Therefore, it is determined that this proposal would not have federalism implications under Executive Order 13132.

For the reasons discussed above, I certify that this proposed regulation (1) is not a ''significant regulatory action'' under Executive Order 12866; (2) is not a ''significant rule'' under the DOT Regulatory Policies and Procedures (44 FR 11034, February 26, 1979); and (3) if promulgated, will not have a significant economic impact, positive or negative, on a substantial number of small entities under the criteria of the Regulatory Flexibility Act. A copy of the draft regulatory evaluation prepared for this action is contained in the Rules Docket. A copy of it may be obtained by contacting the Rules Docket at the location provided under the caption **ADDRESSES.**

List of Subjects in 14 CFR Part 39

Air transportation, Aircraft, Aviation safety, Safety.

The Proposed Amendment

Accordingly, pursuant to the authority delegated to me by the Administrator, the Federal Aviation Administration proposes to amend part 39 of the Federal Aviation Regulations (14 CFR part 39) as follows:

PART 39—AIRWORTHINESS DIRECTIVES

1. The authority citation for part 39 continues to read as follows:

Authority: 49 U.S.C. 106(g), 40113, 44701.

§ 39.13 [Amended]

2. Section 39.13 is amended by adding the following new airworthiness directive:

McDonnell Douglas: Docket 2000–NM–28–AD.

Applicability: Model MD–11 series airplanes, as listed in McDonnell Douglas Alert Service Bulletin MD11–25A187, Revision 01, dated January 5, 2000; certificated in any category.

Note 1: This AD applies to each airplane identified in the preceding applicability provision, regardless of whether it has been modified, altered, or repaired in the area subject to the requirements of this AD. For airplanes that have been modified, altered, or repaired so that the performance of the requirements of this AD is affected, the owner/operator must request approval for an alternative method of compliance in accordance with paragraph (b) of this AD. The request should include an assessment of the effect of the modification, alteration, or repair on the unsafe condition addressed by this AD; and, if the unsafe condition has not been eliminated, the request should include specific proposed actions to address it.

Compliance: Required as indicated, unless accomplished previously.

To prevent smoke and fire in the forward cargo compartment due to burn damage to the insulation blankets in the area surrounding the main external power ground studs, accomplish the following:

Modification

(a) Within one year after the effective date of this AD, modify the insulation blankets in the area surrounding the main external power ground studs in accordance with McDonnell Douglas Alert Service Bulletin MD11–25A187, Revision 01, dated January 5, 2000.

Alternative Methods of Compliance

(b) An alternative method of compliance or adjustment of the compliance time that provides an acceptable level of safety may be used if approved by the Manager, Los Angeles Aircraft Certification Office (ACO), FAA, Transport Airplane Directorate. Operators shall submit their requests through an appropriate FAA Principal Maintenance Inspector, who may add comments and then send it to the Manager, Los Angeles ACO.

Note 2: Information concerning the existence of approved alternative methods of compliance with this AD, if any, may be obtained from the Los Angeles ACO.

Special Flight Permits

(c) Special flight permits may be issued in accordance with sections 21.197 and 21.12000 of the Federal Aviation Regulations (14 CFR 21.197 and 21.12000) to operate the airplane to a location where the requirements of this AD can be accomplished.

Issued in Renton, Washington, on July 14, 2000.

John J. Hickey,

Manager, Transport Airplane Directorate, Aircraft Certification Service.

[FR Doc. 00–18393 Filed 7–26–00; 8:45 am]

BILLING CODE 4910–13–U

DEPARTMENT OF TRANSPORTATION

Federal Aviation Administration

14 CFR Part 39

[Docket No. 2000–NM–29–AD]

RIN 2120–AA64

Airworthiness Directives; McDonnell Douglas Model MD–11 Series Airplanes

AGENCY: Federal Aviation Administration, DOT.

ACTION: Notice of proposed rulemaking (NPRM).

SUMMARY: This document proposes the adoption of a new airworthiness directive (AD) that is applicable to certain McDonnell Douglas Model MD–11 series airplanes. This proposal would require relocating the B7–28 bus located in the upper main circuit breaker in the rear cockpit observer's station from the lower to the upper terminals of the circuit breakers in Row P. This action is

necessary to prevent insufficient clearance and contact between the B7–28 bus and an adjacent panel, which could result in arcing damage, smoke, and/or fire in the upper main circuit breaker panel. This action is intended to address the identified unsafe condition.

DATES: Comments must be received by September 11, 2000.

ADDRESSES: Submit comments in triplicate to the Federal Aviation Administration (FAA), Transport Airplane Directorate, ANM–114, Attention: Rules Docket No. 2000–NM–29–AD, 1601 Lind Avenue, SW., Renton, Washington 98055–4056. Comments may be inspected at this location between 9 a.m. and 3 p.m., Monday through Friday, except Federal holidays. Comments may be submitted via fax to (425) 227–1232. Comments may also be sent via the Internet using the following address: 9-anm-nprmcomment@faa.gov. Comments sent via fax or the Internet must contain ''Docket No. 2000–NM–29–AD'' in the subject line and need not be submitted in triplicate. Comments sent via the Internet as attached electronic files must be formatted in Microsoft Word 97 for Windows or ASCII text.

The service information referenced in the proposed rule may be obtained from Boeing Commercial Aircraft Group, Long Beach Division, 3855 Lakewood Boulevard, Long Beach, California 90846, Attention: Technical Publications Business Administration, Dept. C1–L51 (2–60). This information may be examined at the FAA, Transport Airplane Directorate, 1601 Lind Avenue, SW., Renton, Washington; or at the FAA, Transport Airplane Directorate, Los Angeles Aircraft Certification Office, 3960 Paramount Boulevard, Lakewood, California.

FOR FURTHER INFORMATION CONTACT: Brett Portwood, Aerospace Engineer, Systems and Equipment Branch, ANM–130L, FAA, Transport Airplane Directorate, Los Angeles Aircraft Certification Office, 3960 Paramount Boulevard, Lakewood, California 90712–4137; telephone (562) 627–5350; fax (562) 627–5210.

SUPPLEMENTARY INFORMATION:

Comments Invited

Interested persons are invited to participate in the making of the proposed rule by submitting such written data, views, or arguments as they may desire. Communications shall identify the Rules Docket number and be submitted in triplicate to the address specified above. All communications received on or before the closing date for comments, specified above, will be considered before taking action on the proposed rule. The proposals contained in this notice may be changed in light of the comments received.

Submit comments using the following format:

- Organize comments issue-by-issue. For example, discuss a request to change the compliance time and a request to change the service bulletin reference as two separate issues.
- For each issue, state what specific change to the proposed AD is being requested.
- Include justification (*e.g.,* reasons or data) for each request.

Comments are specifically invited on the overall regulatory, economic, environmental, and energy aspects of the proposed rule. All comments submitted will be available, both before and after the closing date for comments, in the Rules Docket for examination by interested persons. A report summarizing each FAA-public contact concerned with the substance of this proposal will be filed in the Rules Docket.

Commenters wishing the FAA to acknowledge receipt of their comments submitted in response to this notice must submit a self-addressed, stamped postcard on which the following statement is made: ''Comments to Docket Number 2000–NM–29–AD.'' The postcard will be date stamped and returned to the commenter.

Availability of NPRMs

Any person may obtain a copy of this NPRM by submitting a request to the FAA, Transport Airplane Directorate, ANM–114, Attention: Rules Docket No. 2000–NM–29–AD, 1601 Lind Avenue, SW., Renton, Washington 98055–4056.

Discussion

As part of its practice of re-examining all aspects of the service experience of a particular aircraft whenever an accident occurs, the FAA has become aware of an instance in which the B7–28 bus connection to circuit breaker B1–1610, position P1, Row P, made contact with the adjacent panel opening jamb. When the panel door of the cockpit's upper main circuit breaker was opened and closed during a routine inspection, the circuit breaker made contact with the opening jamb. This incident occurred on a McDonnell Douglas Model MD–11 series airplane. The cause of such contact is insufficient clearance between the existing location of the B7–28 bus in the lower terminals of the circuit breakers and adjacent structure. Such insufficient clearance and contact between the B7–28 bus and an adjacent panel, if not corrected, could result in arcing damage, smoke, and/or fire in the upper main circuit breaker panel.

The incident is not considered to be related to an accident that occurred off the coast of Nova Scotia involving a McDonnell Douglas Model MD–11 series airplane. The cause of that accident is still under investigation.

Other Related Rulemaking

The FAA, in conjunction with Boeing and operators of Model MD–11 series airplanes, is continuing to review all aspects of the service history of those airplanes to identify potential unsafe conditions and to take appropriate corrective actions. This proposed airworthiness directive (AD) is one of a series of actions identified during that process. The process is continuing and the FAA may consider additional rulemaking actions as further results of the review become available.

Explanation of Relevant Service Information

The FAA has reviewed and approved McDonnell Douglas Alert Service Bulletin

MD11–24A180, dated January 4, 2000, which describes procedures for relocating the B7–28 bus located in the upper main circuit breaker in the rear cockpit observer's station from the lower to the upper terminals of the circuit breakers in Row P. Relocation procedures include removing and retaining the B7–28 bus, power feeder wire, and circuit wires from the circuit breakers. Procedures also include installing the B7–28 bus and power feeder wire to the upper terminals of the circuit breakers, and installing circuit wires to the lower terminal of the respective circuit breakers. Relocation of the B7–28 bus from the lower to the upper terminals of the circuit breakers will increase the clearance between the B7–28 bus and an adjacent panel, and minimize the possibility of contact between those components. Accomplishment of the actions specified in the alert service bulletin is intended to adequately address the identified unsafe condition.

Explanation of Requirements of Proposed Rule

Since an unsafe condition has been identified that is likely to exist or develop on other products of this same type design, the proposed AD would require accomplishment of the actions specified in the alert service bulletin described previously.

Cost Impact

There are approximately 144 airplanes of the affected design in the

worldwide fleet. The FAA estimates that 56 airplanes of U.S. registry would be affected by this proposed AD, that it would take approximately 2 work hours per airplane to accomplish the proposed actions, and that the average labor rate is $60 per work hour. Based on these figures, the cost impact of the proposed AD on U.S. operators is estimated to be $6,720, or $120 per airplane.

The cost impact figure discussed above is based on assumptions that no operator has yet accomplished any of the proposed requirements of this AD action, and that no operator would accomplish those actions in the future if this proposed AD were not adopted. The cost impact figures discussed in AD rulemaking actions represent only the time necessary to perform the specific actions actually required by the AD. These figures typically do not include incidental costs, such as the time required to gain access and close up, planning time, or time necessitated by other administrative actions.

Regulatory Impact

The regulations proposed herein would not have a substantial direct effect on the States, on the relationship between the national Government and the States, or on the distribution of power and responsibilities among the various levels of government. Therefore, it is determined that this proposal would not have federalism implications under Executive Order 13132.

For the reasons discussed above, I certify that this proposed regulation (1) is not a ''significant regulatory action'' under Executive Order 12866; (2) is not a ''significant rule'' under the DOT Regulatory Policies and Procedures (44 FR 11034, February 26, 1979); and (3) if promulgated, will not have a significant economic impact, positive or negative, on a substantial number of small entities under the criteria of the Regulatory Flexibility Act. A copy of the draft regulatory evaluation prepared for this action is contained in the Rules Docket. A copy of it may be obtained by contacting the Rules Docket at the location provided under the caption **ADDRESSES.**

List of Subjects in 14 CFR Part 39

Air transportation, Aircraft, Aviation safety, Safety.

The Proposed Amendment

Accordingly, pursuant to the authority delegated to me by the Administrator, the Federal Aviation Administration proposes to amend part 39 of the Federal Aviation Regulations (14 CFR part 39) as follows:

PART 39—AIRWORTHINESS DIRECTIVES

1. The authority citation for part 39 continues to read as follows:

Authority: 49 U.S.C. 106(g), 40113, 44701.

§ 39.13 [Amended]

2. Section 39.13 is amended by adding the following new airworthiness directive:

McDonnell Douglas: Docket 2000–NM–29–AD.

Applicability: Model MD–11 series airplanes, as listed in McDonnell Douglas Alert Service Bulletin MD11–24A180, dated January 4, 2000; certificated in any category.

Note 1: This AD applies to each airplane identified in the preceding applicability provision, regardless of whether it has been modified, altered, or repaired in the area subject to the requirements of this AD. For airplanes that have been modified, altered, or repaired so that the performance of the requirements of this AD is affected, the owner/operator must request approval for an alternative method of compliance in accordance with paragraph (b) of this AD. The request should include an assessment of the effect of the modification, alteration, or repair on the unsafe condition addressed by this AD; and, if the unsafe condition has not been eliminated, the request should include specific proposed actions to address it.

Compliance: Required as indicated, unless accomplished previously.

To prevent insufficient clearance and contact between the B7–28 bus and an adjacent panel, which could result in arcing damage, smoke, and/or fire in the upper main circuit breaker panel, accomplish the following:

Relocation

(a) Within 12 months after the effective date of this AD, relocate the B7–28 bus located in the upper main circuit breaker in the rear cockpit observer's station from the lower to the upper terminals of the circuit breakers in Row P in accordance with the Accomplishment Instructions of McDonnell Douglas Alert Service Bulletin MD11–24A180, dated January 4, 2000.

Alternative Methods of Compliance

(b) An alternative method of compliance or adjustment of the compliance time that provides an acceptable level of safety may be used if approved by the Manager, Los Angeles Aircraft Certification Office (ACO), FAA, Transport Airplane Directorate. Operators shall submit their requests through an appropriate FAA Principal Maintenance Inspector, who may add comments and then send it to the Manager, Los Angeles ACO.

Note 2: Information concerning the existence of approved alternative methods of compliance with this AD, if any, may be obtained from the Los Angeles ACO.

Special Flight Permit

(c) Special flight permits may be issued in accordance with sections 21.197 and 21.199 of the Federal Aviation Regulations (14 CFR 21.197 and 21.199) to operate the airplane to a location where the requirements of this AD can be accomplished.

Issued in Renton, Washington, on July 14, 2000.

John J. Hickey,

Manager, Transport Airplane Directorate, Aircraft Certification Service.

[FR Doc. 00–18394 Filed 7–26–00; 8:45 am]

BILLING CODE 4910–13–U

DEPARTMENT OF TRANSPORTATION

Federal Aviation Administration

14 CFR Part 39

[Docket No. 2000–NM–31–AD]

RIN 2120–AA64

Airworthiness Directives; McDonnell Douglas Model MD–11 Series Airplanes

AGENCY: Federal Aviation Administration, DOT.

ACTION: Notice of proposed rulemaking (NPRM).

SUMMARY: This document proposes the supersedure of an existing airworthiness directive (AD), applicable to certain McDonnell Douglas Model MD–11 series airplanes, that currently requires a one-time inspection to detect discrepancies at certain areas around the entry light connector of the sliding ceiling panel above the forward passenger doors, and repair, if necessary. For certain airplanes, that AD also requires installation or modification of a flapper door ramp deflector on the forward entry drop ceiling structure. For certain other airplanes, that AD requires inspection of the wire assembly support installation for evidence of chafing, and corrective actions, if necessary. For certain airplanes subject to the existing AD, as well as additional airplanes being added to the applicability of this proposed AD, this action would add a requirement for modification of a support bracket for the ramp deflector assembly. This action is necessary to prevent chafing of electrical wire assemblies above the forward passenger doors, which could result in an electrical fire in the passenger compartment. This action is intended to address the identified unsafe condition.

DATES: Comments must be received by September 11, 2000.

ADDRESSES: Submit comments in triplicate to the Federal Aviation Administration (FAA), Transport Airplane Directorate, ANM–114, Attention: Rules Docket No. 2000–NM–

31–AD, 1601 Lind Avenue, SW., Renton, Washington 98055–4056. Comments may be inspected at this location between 9 a.m. and 3 p.m., Monday through Friday, except Federal holidays. Comments may be submitted via fax to (425) 227–1232. Comments may also be sent via the Internet using the following address: 9-anm-nprmcomment@faa.gov. Comments sent via fax or the Internet must contain ''Docket No. 2000–NM–31–AD'' in the subject line and need not be submitted in triplicate. Comments sent via the Internet as attached electronic files must be formatted in Microsoft Word 97 for Windows or ASCII text.

The service information referenced in the proposed rule may be obtained from Boeing Commercial Aircraft Group, Long Beach Division, 3855 Lakewood Boulevard, Long Beach, California 90846, Attention: Technical Publications Business Administration, Dept. C1–L51 (2–60). This information may be examined at the FAA, Transport Airplane Directorate, 1601 Lind Avenue, SW., Renton, Washington.

FOR FURTHER INFORMATION CONTACT: Brett Portwood, Aerospace Engineer, Systems and Equipment Branch, ANM–130L, FAA, Transport Airplane Directorate, Los Angeles Aircraft Certification Office, 3960 Paramount Boulevard, Lakewood, California 90712–4137; telephone (562) 627–5350; fax (562) 627–5210.

SUPPLEMENTARY INFORMATION:

Comments Invited

Interested persons are invited to participate in the making of the proposed rule by submitting such written data, views, or arguments as they may desire. Communications shall identify the Rules Docket number and be submitted in triplicate to the address specified above. All communications received on or before the closing date for comments, specified above, will be considered before taking action on the proposed rule. The proposals contained in this notice may be changed in light of the comments received.

Submit comments using the following format:

- Organize comments issue-by-issue. For example, discuss a request to change the compliance time and a request to change the service bulletin reference as two separate issues.
- For each issue, state what specific change to the proposed AD is being requested.
- Include justification (e.g., reasons or data) for each request.

Comments are specifically invited on the overall regulatory, economic, environmental, and energy aspects of the proposed rule. All comments submitted will be available, both before and after the closing date for comments, in the Rules Docket for examination by interested persons. A report summarizing each FAA-public contact concerned with the substance of this proposal will be filed in the Rules Docket.

Commenters wishing the FAA to acknowledge receipt of their comments submitted in response to this notice must submit a self-addressed, stamped postcard on which the following statement is made: ''Comments to Docket Number 2000–NM–31–AD.'' The postcard will be date stamped and returned to the commenter.

Availability of NPRMs

Any person may obtain a copy of this NPRM by submitting a request to the FAA, Transport Airplane Directorate, ANM–114, Attention: Rules Docket No. 2000–NM–31–AD, 1601 Lind Avenue, SW., Renton, Washington 98055–4056.

Discussion

On February 10, 2000, the FAA issued AD 2000–03–10, amendment 39–11569 (65 FR 8034, February 17, 2000), applicable to certain McDonnell Douglas MD–11 series airplanes, to require a one-time inspection to detect discrepancies at certain areas around the entry light connector of the sliding ceiling panel above the forward passenger doors, and repair, if necessary. For certain airplanes, that AD also requires installation or modification of a flapper door ramp deflector on the forward entry drop ceiling structure. For certain other airplanes, that AD requires inspection of the wire assembly support installation for evidence of chafing, and corrective actions, if necessary. That action was prompted by a report indicating that damaged electrical wires were found above the forward passenger doors due to flapper panels moving inboard and chafing the electrical wire assemblies of this area. The requirements of that AD are intended to prevent such chafing, which could result in an electrical fire in the passenger compartment.

The incident that prompted AD 2000–03–10 is not considered to be related to an accident that occurred off the coast of Nova Scotia involving a McDonnell Douglas Model MD–11 series airplane. The cause of that accident is still under investigation.

Other Related Rulemaking

The FAA, in conjunction with Boeing and operators of Model MD–11 series airplanes, is continuing to review all aspects of the service history of those airplanes to identify potential unsafe conditions and to take appropriate corrective actions. This proposed airworthiness directive (AD) is one of a series of actions identified during that process. The process is continuing and the FAA may consider additional rulemaking actions as further results of the review become available.

Actions Since Issuance of Previous Rule

In the preamble to AD 2000–03–10, the FAA indicated that the actions required by that AD were considered ''interim action'' and that further rulemaking action was being considered. The FAA now has determined that further rulemaking action is indeed necessary, and this proposed AD follows from that determination.

Since the issuance of AD 2000–03–10, the FAA has received a report indicating that, on certain airplanes, a support bracket for the ramp deflector assembly installed in accordance with the existing AD could chafe an electrical wire bundle located above the support bracket. In order to prevent such chafing, the FAA finds that it is necessary to require modification of the subject support bracket. In addition, the FAA has determined that this modification is necessary not only for certain airplanes subject to the existing AD, but also for certain additional airplanes that were delivered without modification of the subject support bracket.

Explanation of Relevant Service Information

The FAA has reviewed and approved McDonnell Douglas Alert Service Bulletin MD11–25A194, Revision 06, dated January 27, 2000. That alert service bulletin describes procedures for installation of a ramp deflector assembly similar to those described in McDonnell Douglas Alert Service Bulletin MD11–25A194, Revision 05, dated June 21, 1999, which was referenced as an appropriate source of service information for certain actions required by the existing AD. However, Revision 06 of the alert service bulletin describes new procedures, applicable to certain airplanes, for modifying a support bracket on the ramp deflector assembly on the right-side forward entry drop ceiling structure. In addition to airplanes listed in Revision 05 of the alert service bulletin, Revision 06 lists several additional airplanes on which this modification of the support bracket is necessary. Accomplishment of the actions specified in Revision 06 of the alert service bulletin is intended to

adequately address the identified unsafe condition.

Explanation of Requirements of Proposed Rule

Since an unsafe condition has been identified that is likely to exist or develop on other products of this same type design, the proposed AD would supersede AD 2000–03–10 to continue to require a one-time inspection to detect discrepancies at certain areas around the entry light connector of the sliding ceiling panel above the forward passenger doors, and repair, if necessary. For certain airplanes, the proposed AD would also continue to require installation or modification of a flapper door ramp deflector on the forward entry drop ceiling structure, and, for certain other airplanes, inspection of the wire assembly support installation for evidence of chafing, and corrective actions, if necessary. For certain airplanes subject to the existing AD, as well as additional airplanes being added to the applicability of this proposed AD, this proposed AD would require modification of a support bracket for the ramp deflector assembly. The actions would be required to be accomplished in accordance with the alert service bulletin described previously.

Explanation of Change to ''Cost Impact'' Section

Since the issuance of AD 2000–03–10, the FAA has determined that fewer airplanes are affected by the requirements of that AD than was stated in the ''Cost Impact'' section in that AD. Therefore, though this proposed AD would add airplanes to the applicability of the existing AD, the number of affected airplanes stated in the ''Cost Impact'' section is lower than stated in the existing AD. The cost figures contained in the ''Cost Impact'' section of this AD have been revised accordingly.

Cost Impact

There are approximately 110 airplanes of the affected design in the worldwide fleet. The FAA estimates that 21 airplanes of U.S. registry would be affected by this proposed AD.

The inspection to detect discrepancies around the entry light connector of the slide ceiling panel above the forward passenger doors that is currently required by AD 2000–03–10 takes approximately 2 work hours per airplane to accomplish, at an average labor rate of $60 per work hour. Based on these figures, the cost impact of this currently required inspection on U.S. operators is estimated to be $2,520, or $120 per airplane.

For Group 1 airplanes as specified in McDonnell Douglas Alert Service Bulletin MD11–25A194, Revision 06 (approximately 16 airplanes of U.S. registry), the installation of the flapper door ramp deflector that is currently required by AD 2000–03–10 takes approximately 8 work hours per airplane to accomplish, at an average labor rate of $60 per work hour. Required parts cost approximately $455 per airplane. Based on these figures, the cost impact of this currently required installation on U.S. operators of Group 1 airplanes is estimated to be $14,960, or $935 per airplane.

For Group 2 airplanes as specified in McDonnell Douglas Alert Service Bulletin MD11–25A194, Revision 06 (approximately 8 airplanes of U.S. registry), the installation of the flapper door ramp deflector that is currently required by AD 2000–03–10 takes approximately 8 work hours per airplane to accomplish, at an average labor rate of $60 per work hour. Required parts cost approximately $890 per airplane. Based on these figures, the cost impact of this currently required installation on U.S. operators of Group 2 airplanes is estimated to be $10,960, or $1,370 per airplane.

For airplanes listed in McDonnell Douglas Alert Service Bulletin MD11–24A068, Revision 01, dated March 8, 1999 (approximately 21 airplanes of U.S. registry), the inspection of the wire assembly support installation that is currently required by AD 2000–03–10 takes approximately 1 work hour per airplane to accomplish, at an average labor rate of $60 per work hour. Based on these figures, the cost impact of this currently required inspection on U.S. operators is estimated to be $1,260, or $60 per airplane.

For airplanes in Groups 1 and 3 as specified in McDonnell Douglas Alert Service Bulletin MD11–25A194, Revision 06 (approximately 18 airplanes of U.S. registry), the new modification that is proposed in this AD action would take approximately 2 work hours per airplane to accomplish, at an average labor rate of $60 per work hour. Based on these figures, the cost impact of this proposed modification on U.S. operators is estimated to be $2,160, or $120 per airplane.

The cost impact figures discussed above are based on assumptions that no operator has yet accomplished any of the current or proposed requirements of this AD action, and that no operator would accomplish those actions in the future if this AD were not adopted. The cost impact figures discussed in AD rulemaking actions represent only the time necessary to perform the specific actions actually required by the AD. These figures typically do not include incidental costs, such as the time required to gain access and close up, planning time, or time necessitated by other administrative actions.

Regulatory Impact

The regulations proposed herein would not have a substantial direct effect on the States, on the relationship between the national Government and the States, or on the distribution of power and responsibilities among the various levels of government. Therefore, it is determined that this proposal would not have federalism implications under Executive Order 13132.

For the reasons discussed above, I certify that this proposed regulation (1) is not a ''significant regulatory action'' under Executive Order 12866; (2) is not a ''significant rule'' under the DOT Regulatory Policies and Procedures (44 FR 11034, February 26, 1979); and (3) if promulgated, will not have a significant economic impact, positive or negative, on a substantial number of small entities under the criteria of the Regulatory Flexibility Act. A copy of the draft regulatory evaluation prepared for this action is contained in the Rules Docket. A copy of it may be obtained by contacting the Rules Docket at the location provided under the caption **ADDRESSES.**

List of Subjects in 14 CFR Part 39

Air transportation, Aircraft, Aviation safety, Safety.

The Proposed Amendment

Accordingly, pursuant to the authority delegated to me by the Administrator, the Federal Aviation Administration proposes to amend part 39 of the Federal Aviation Regulations (14 CFR part 39) as follows:

PART 39—AIRWORTHINESS DIRECTIVES

1. The authority citation for part 39 continues to read as follows:

Authority: 49 U.S.C. 106(g), 40113, 44701.

§ 39.13 [Amended]

2. Section 39.13 is amended by removing amendment 39–11569 (65 FR 8034, February 17, 2000), and by adding a new airworthiness directive (AD), to read as follows:

McDonnell Douglas: Docket 2000–NM–31–AD. Supersedes AD 2000–03–10, Amendment 39–11569.

Applicability: Model MD–11 series airplanes; as listed in McDonnell Douglas

Alert Service Bulletin MD11–25A194, Revision 06, dated January 27, 2000; and MD11–24A068, Revision 01, dated March 8, 1999; certificated in any category.

Note 1: This AD applies to each airplane identified in the preceding applicability provision, regardless of whether it has been modified, altered, or repaired in the area subject to the requirements of this AD. For airplanes that have been modified, altered, or repaired so that the performance of the requirements of this AD is affected, the owner/operator must request approval for an alternative method of compliance in accordance with paragraph (f) of this AD. The request should include an assessment of the effect of the modification, alteration, or repair on the unsafe condition addressed by this AD; and, if the unsafe condition has not been eliminated, the request should include specific proposed actions to address it.

Compliance: Required as indicated, unless accomplished previously.

Restatement of the Requirements of AD 2000–03–10: Detailed Visual Inspection

(a) For airplanes listed in McDonnell Douglas Alert Service Bulletins MD11–25A194, Revision 05, dated June 21, 1999, and MD11–24A068, Revision 01, dated March 8, 1999: Within 10 days after December 28, 1998 (the effective date of AD 98–25–11 R1, amendment 39–10988), perform a detailed visual inspection of the aircraft wiring to detect discrepancies that include but are not limited to frayed, chafed, or nicked wires and wire insulation in the areas specified in paragraphs (a)(1) and (a)(2) of this AD.

Note 2: For the purposes of this AD, a detailed visual inspection is defined as: ''An intensive visual examination of a specific structural area, system, installation, or assembly to detect damage, failure, or irregularity. Available lighting is normally supplemented with a direct source of good lighting at intensity deemed appropriate by the inspector. Inspection aids such as mirror, magnifying lenses, etc., may be used. Surface cleaning and elaborate access procedures may be required.''

(1) At the area of the forward drop ceiling just outboard of mod block S3–735, and forward and inboard of the light ballast for the entry light on the sliding ceiling panel above the forward left passenger door (1L) at station location x = 24.75, y = 435, and z = 64.5.

(2) At the area above the forward right passenger door (1R) at station location x = −30, y = 430, and z = 70 in the ramp deflector assembly part number 4223570–501.

Corrective Action

(b) If any discrepancy is detected during the visual inspection required by paragraph (a) of this AD, prior to further flight, repair in accordance with Chapter 20, Standard Wiring Practices of the MD–11 Wiring Diagram Manual, dated January 1, 1998, or April 1, 1998.

Inspection, Installation, and Modification

(c) For airplanes listed in McDonnell Douglas Alert Service Bulletin MD11–25A194, Revision 05, dated June 21, 1999; or MD11–24A068, Revision 01, dated March 8, 1999: Within 6 months after March 23, 2000 (the effective date of AD 2000–03–10, amendment 39–11569), accomplish the actions specified in paragraphs (c)(1), (c)(2), (c)(3), and (c)(4) of this AD, as applicable.

(1) For Group 1 airplanes listed in McDonnell Douglas Alert Service Bulletin MD11–25A194, Revision 05, dated June 21, 1999: Install a ramp deflector assembly on the right side forward entry drop ceiling structure in accordance with McDonnell Douglas Alert Service Bulletin MD11–25A194, Revision 05, dated June 21, 1999; or McDonnell Douglas Alert Service Bulletin MD11–25A194, Revision 06, dated January 27, 2000. After the effective date of this AD, only Revision 06 of the alert service bulletin shall be used.

(2) For Group 2 airplanes listed in McDonnell Douglas Alert Service Bulletin MD11–25A194, Revision 05, dated June 21, 1999: Install a ramp deflector assembly on the right side forward entry drop ceiling structure in accordance with McDonnell Douglas Alert Service Bulletin MD11–25A194, Revision 05, dated June 21, 1999; or McDonnell Douglas Alert Service Bulletin MD11–25A194, Revision 06, dated January 27, 2000. After the effective date of this AD, only Revision 06 of the alert service bulletin shall be used.

Note 3: Installation of a ramp deflector assembly in accordance with McDonnell Douglas Service Bulletin MD11–25–194, dated March 15, 1996; Revision 01, dated May 1, 1996; Revision 02, dated July 12, 1996; Revision 03, dated December 12, 1996; or Revision 04, dated March 8, 1999, is acceptable for compliance with the requirements of paragraph (c)(2) of this AD.

(3) For Group 3 airplanes listed in McDonnell Douglas Alert Service Bulletin MD11–25A194, Revision 05, dated June 21, 1999: Modify the previously installed ramp deflector assembly bracket in accordance with McDonnell Douglas Alert Service Bulletin MD11–25A194, Revision 05, dated June 21, 1999; or McDonnell Douglas Alert Service Bulletin MD11–25A194, Revision 06, dated January 27, 2000. After the effective date of this AD, only Revision 06 of the alert service bulletin shall be used.

(4) For airplanes listed in McDonnell Douglas Alert Service Bulletin MD11–24A068, Revision 01, dated March 8, 1999: Perform a general visual inspection of the wire assembly support installation for evidence of chafing, in accordance with the service bulletin. If any chafing is detected, prior to further flight, repair or replace any discrepant part with a new part in accordance with the service bulletin.

Note 4: For the purposes of this AD, a general visual inspection is defined as ''A visual examination of an interior or exterior area, installation, or assembly to detect obvious damage, failure, or irregularity. This level of inspection is made under normally available lighting conditions such as daylight, hangar lighting, flashlight, or drop-light, and may require removal or opening of access panels or doors. Stands, ladders, or platforms may be required to gain proximity to the area being check.''

New Requirements of This AD

One-Time Inspection

(d) For airplanes other than those identified in paragraph (a) of this AD: Within 10 days after the effective date of this AD, perform a detailed visual inspection of the aircraft wiring to detect discrepancies that include but are not limited to frayed, chafed, or nicked wires and wire insulation in the areas specified in paragraphs (a)(1) and (a)(2) of this AD. If any discrepancy is found, prior to further flight, repair in accordance with the requirements of paragraph (b) of this AD.

Note 5: Accomplishment of the inspection required by paragraph (a) of AD 98–25–11 R1, amendment 39–10988, prior to the effective date of this AD is acceptable for compliance with paragraph (d) of this AD.

Modification

(e) For airplanes listed in Group 3 of McDonnell Douglas Alert Service Bulletin MD11–25A194, Revision 06, dated January 27, 2000: Within 6 months after the effective date of this AD, modify the ramp deflector assembly support bracket on the right side forward entry door drop ceiling structure, in accordance with McDonnell Douglas Alert Service Bulletin MD11–25A194, Revision 06, dated January 27, 2000.

Alternative Methods of Compliance

(f) An alternative method of compliance or adjustment of the compliance time that provides an acceptable level of safety may be used if approved by the Manager, Los Angeles Aircraft Certification Office (ACO), FAA, Transport Airplane Directorate. Operators shall submit their requests through an appropriate FAA Principal Maintenance Inspector, who may add comments and then send it to the Manager, Los Angeles ACO.

Note 6: Information concerning the existence of approved alternative methods of compliance with this AD, if any, may be obtained from the Los Angeles ACO.

Special Flight Permits

(g) Special flight permits may be issued in accordance with sections 21.197 and 21.199 of the Federal Aviation Regulations (14 CFR 21.197 and 21.199) to operate the airplane to a location where the requirements of this AD can be accomplished.

Issued in Renton, Washington, on July 14, 2000.

John J. Hickey,

Manager, Transport Airplane Directorate, Aircraft Certification Service.

[FR Doc. 00–18395 Filed 7–26–00; 8:45 am]

BILLING CODE 4910–13–U

DEPARTMENT OF TRANSPORTATION

Federal Aviation Administration

14 CFR Part 39

[Docket No. 2000–NM–32–AD]

RIN 2120–AA64

Airworthiness Directives; McDonnell Douglas Model MD–11 Series Airplanes

AGENCY: Federal Aviation Administration, DOT.

ACTION: Notice of proposed rulemaking (NPRM).

SUMMARY: This document proposes the adoption of a new airworthiness directive (AD) that is applicable to certain McDonnell Douglas Model MD–11 series airplanes. This proposal would require resistance tests of the brake coils of the auto throttle servo (ATS) and of the elevator load feel (ELF)/flap limiter (FL) duplex actuator for low electrical resistance; and corrective actions, if necessary. This action is necessary to prevent electrical shorting of the brake coils of the ATS or ELF/FL duplex actuator, which could result in smoke in the cockpit and/or passenger cabin. This action is intended to address the identified unsafe condition.

DATES: Comments must be received by September 11, 2000.

ADDRESSES: Submit comments in triplicate to the Federal Aviation Administration (FAA), Transport Airplane Directorate, ANM–114, Attention: Rules Docket No. 2000–NM–32–AD, 1601 Lind Avenue, SW., Renton, Washington 98055–4056. Comments may be inspected at this location between 9 a.m. and 3 p.m., Monday through Friday, except Federal holidays. Comments may be submitted via fax to (425) 227–1231. Comments may also be sent via the Internet using the following address: 9–anm-nprmcomment@faa.gov. Comments sent via fax or the Internet must contain ''Docket No. 2000–NM–32–AD'' in the subject line and need not be submitted in triplicate. Comments sent via the Internet as attached electronic files must be formatted in Microsoft Word 97 for Windows or ASCII text.

The service information referenced in the proposed rule may be obtained from Boeing Commercial Aircraft Group, Long Beach Division, 3855 Lakewood Boulevard, Long Beach, California 90846, Attention: Technical Publications Business Administration, Dept. C1–L51 (2–60). This information may be examined at the FAA, Transport Airplane Directorate, 1601 Lind Avenue, SW., Renton, Washington; or at the FAA, Transport Airplane Directorate, Los Angeles Aircraft Certification Office, 3960 Paramount Boulevard, Lakewood, California.

FOR FURTHER INFORMATION CONTACT: Brett Portwood, Aerospace Engineer, Systems and Equipment Branch, ANM–130L, FAA, Transport Airplane Directorate, Los Angeles Aircraft Certification Office, 3960 Paramount Boulevard, Lakewood, California 90712–4137; telephone (562) 627–5350; fax (562) 627–5210.

SUPPLEMENTARY INFORMATION:

Comments Invited

Interested persons are invited to participate in the making of the proposed rule by submitting such written data, views, or arguments as they may desire. Communications shall identify the Rules Docket number and be submitted in triplicate to the address specified above. All communications received on or before the closing date for comments, specified above, will be considered before taking action on the proposed rule. The proposals contained in this notice may be changed in light of the comments received.

Submit comments using the following format:

- Organize comments issue-by-issue. For example, discuss a request to change the compliance time and a request to change the service bulletin reference as two separate issues.
- For each issue, state what specific change to the proposed AD is being requested.
- Include justification (*e.g.,* reasons or data) for each request.

Comments are specifically invited on the overall regulatory, economic, environmental, and energy aspects of the proposed rule. All comments submitted will be available, both before and after the closing date for comments, in the Rules Docket for examination by interested persons. A report summarizing each FAA-public contact concerned with the substance of this proposal will be filed in the Rules Docket.

Commenters wishing the FAA to acknowledge receipt of their comments submitted in response to this notice must submit a self-addressed, stamped postcard on which the following statement is made: ''Comments to Docket Number 2000–NM–32–AD.'' The postcard will be date stamped and returned to the commenter.

Availability of NPRMs

Any person may obtain a copy of this NPRM by submitting a request to the FAA, Transport Airplane Directorate, ANM–114, Attention: Rules Docket No. 2000–NM–32–AD, 1601 Lind Avenue, SW., Renton, Washington 98055–4056.

Discussion

As part of its practice of re-examining all aspects of the service experience of a particular aircraft whenever an accident occurs, the FAA has become aware of an incident in which the auto throttle servo (ATS) shorted electrically and caused smoke in the cockpit. This incident occurred on a McDonnell Douglas Model MD–11 series airplane. Investigation revealed that one of the servo brake solenoid assemblies had internal shorting of the coil windings caused by corrosion due to chlorine contamination during production of the ATS. Electrical shorting of the brake coils of the ATS or elevator load feel/flap limiter (ELF/FL) duplex actuator, if not corrected, could result in smoke in the cockpit and/or passenger cabin.

This incident is not considered to be related to an accident that occurred off the coast of Nova Scotia involving a McDonnell Douglas Model MD–11 series airplane. The cause of that accident is still under investigation.

Other Related Rulemaking

The FAA, in conjunction with Boeing and operators of Model MD–11 series airplanes, is continuing to review all aspects of the service history of those airplanes to identify potential unsafe conditions and to take appropriate corrective actions. This airworthiness directive (AD) is one of a series of actions identified during that process. The process is continuing and the FAA may consider additional rulemaking actions as further results of the review become available.

Explanation of Relevant Service Information

The FAA has reviewed and approved Boeing Service Bulletin MD11–22–024, dated March 29, 2000, which describes procedures for resistance tests of the brake coils of the ATS and of the ELF/FL duplex actuator for low electrical resistance; and corrective actions, if necessary. The corrective actions include replacing the thrust control module with a new thrust control module or a thrust control module that has a modified and reidentified ATS, and replacing the ELF/FL duplex actuator with a modified and reidentified ELF/FL duplex actuator. Accomplishment of the actions specified in the service bulletin is intended to adequately address the identified unsafe condition.

Explanation of Requirements of Proposed Rule

Since an unsafe condition has been identified that is likely to exist or develop on other products of this same type design, the proposed AD would require accomplishment of the actions specified in the service bulletin described previously.

Cost Impact

There are approximately 187 McDonnell Douglas Model MD–11 series airplanes of the affected design in the worldwide fleet. The FAA estimates that 60 airplanes of U.S. registry would be affected by this proposed AD, that it would take approximately 2 work hours per airplane to accomplish the proposed resistance tests, and that the average labor rate is $60 per work hour. Based on these figures, the cost impact of the resistance tests proposed by this AD on U.S. operators is estimated to be $7,200, or $120 per airplane.

The cost impact figure discussed above is based on assumptions that no operator has yet accomplished any of the proposed requirements of this AD action, and that no operator would accomplish those actions in the future if this proposed AD were not adopted. The cost impact figures discussed in AD rulemaking actions represent only the time necessary to perform the specific actions actually required by the AD. These figures typically do not include incidental costs, such as the time required to gain access and close up, planning time, or time necessitated by other administrative actions.

Regulatory Impact

The regulations proposed herein would not have a substantial direct effect on the States, on the relationship between the national Government and the States, or on the distribution of power and responsibilities among the various levels of government. Therefore, it is determined that this proposal would not have federalism implications under Executive Order 13232.

For the reasons discussed above, I certify that this proposed regulation (1) is not a ''significant regulatory action'' under Executive Order 12866; (2) is not a ''significant rule'' under the DOT Regulatory Policies and Procedures (44 FR 11034, February 26, 1979); and (3) if promulgated, will not have a significant economic impact, positive or negative, on a substantial number of small entities under the criteria of the Regulatory Flexibility Act. A copy of the draft regulatory evaluation prepared for this action is contained in the Rules Docket. A copy of it may be obtained by contacting the Rules Docket at the location provided under the caption **ADDRESSES.**

List of Subjects in 14 CFR Part 39

Air transportation, Aircraft, Aviation safety, Safety.

The Proposed Amendment

Accordingly, pursuant to the authority delegated to me by the Administrator, the Federal Aviation Administration proposes to amend part 39 of the Federal Aviation Regulations (14 CFR part 39) as follows:

PART 39–AIRWORTHINESS DIRECTIVES

1. The authority citation for part 39 continues to read as follows:

Authority: 49 U.S.C. 106(g), 40113, 44701.

§ 39.13 [Amended]

2. Section 39.13 is amended by adding the following new airworthiness directive:

McDonnell Douglas: Docket 2000–NM–32–AD.

Applicability: Model MD–11 series airplanes, as listed in Boeing Service Bulletin MD11–22–024, dated March 29, 2000; certificated in any category.

Note 1: This AD applies to each airplane identified in the preceding applicability provision, regardless of whether it has been modified, altered, or repaired in the area subject to the requirements of this AD. For airplanes that have been modified, altered, or repaired so that the performance of the requirements of this AD is affected, the owner/operator must request approval for an alternative method of compliance in accordance with paragraph (c) of this AD. The request should include an assessment of the effect of the modification, alteration, or repair on the unsafe condition addressed by this AD; and, if the unsafe condition has not been eliminated, the request should include specific proposed actions to address it.

Compliance: Required as indicated, unless accomplished previously.

To prevent electrical shorting of the brake coils of the auto throttle servo (ATS) or elevator load feel (ELF)/flap limiter (FL) duplex actuator, which could result in smoke in the cockpit and/or passenger cabin, accomplish the following:

Resistance Tests

(a) Within 1 year after the effective date of this AD, accomplish the actions specified in paragraphs (a)(1), (a)(2), and (a)(3) of this AD in accordance with Boeing Service Bulletin MD11–22–024, dated March 29, 2000.

(1) Perform resistance tests of the brake coils of the ATS for low electrical resistance. If one or both resistance tests fail, prior to further flight, replace the thrust control module with a new thrust control module or a thrust control module that has a modified and reidentified auto throttle servo, in accordance with the service bulletin.

(2) Perform resistance tests of the brake coils of the FL duplex actuator for low electrical resistance. If one or both resistance tests fail, prior to further flight, replace the FL duplex actuator with a modified and reidentified FL duplex actuator in accordance with the service bulletin.

(3) Perform resistance tests of the brake coils of the ELF duplex actuator for low electrical resistance. If one or both resistance tests fail, prior to further flight, replace the ELF duplex actuator with a modified and reidentified ELF duplex actuator in accordance with the service bulletin.

Spares

(b) As of the effective date of this AD, no person shall install the following parts on any airplane.

(1) Thrust control module assembly having part number ABH7760–1, ABH7760–501, or ABH7760–503;

(2) Flap limiter duplex acutuator having part number 4059004–901; or

(3) Elevator load feel duplex actuator having part number 4059005–901.

Alternative Methods of Compliance

(c) An alternative method of compliance or adjustment of the compliance time that provides an acceptable level of safety may be used if approved by the Manager, Los Angeles ACO, FAA, Transport Airplane Directorate. Operators shall submit their requests through an appropriate FAA Principal Maintenance Inspector, who may add comments and then send it to the Manager, Los Angeles ACO.

Note 2: Information concerning the existence of approved alternative methods of compliance with this AD, if any, may be obtained from the Los Angeles ACO.

Special Flight Permit

(d) Special flight permits may be issued in accordance with sections 21.197 and 21.199 of the Federal Aviation Regulations (14 CFR 21.197 and 21.199) to operate the airplane to a location where the requirements of this AD can be accomplished.

Issued in Renton, Washington, on July 14, 2000.

John J. Hickey,

Manager, Transport Airplane Directorate, Aircraft Certification Service.

[FR Doc. 00–18396 Filed 7–26–00; 8:45 am]

BILLING CODE 4910–13–U

DEPARTMENT OF TRANSPORTATION

Federal Aviation Administration

14 CFR Part 39

[Docket No. 2000–NM–33–AD]

RIN 2120–AA64

Airworthiness Directives; McDonnell Douglas Model MD–11 Series Airplanes

AGENCY: Federal Aviation Administration, DOT.

ACTION: Notice of proposed rulemaking (NPRM).

SUMMARY: This document proposes the adoption of a new airworthiness directive (AD) that is applicable to certain McDonnell Douglas Model MD–11 series airplanes. This proposal would require an inspection to detect chafing or damage of the electrical wires leading to the terminal strips in the center accessory compartment (CAC) area; and corrective actions, if necessary. This proposal also would require revising the wire connection stack up of certain cable terminals at the electrical power center bays in the CAC, and replacing certain terminal strips with new strips and removing applicable nameplates at electrical power center bays. This action is necessary to prevent arcing and sparking damage to the power feeder cables, terminal strips, and adjacent structure, and consequent smoke and fire in the CAC. This action is intended to address the identified unsafe condition.

DATES: Comments must be received by September 11, 2000.

ADDRESSES: Submit comments in triplicate to the Federal Aviation Administration (FAA), Transport Airplane Directorate, ANM–114, Attention: Rules Docket No. 2000–NM–33–AD, 1601 Lind Avenue, SW., Renton, Washington 98055–4056. Comments may be inspected at this location between 9 a.m. and 3 p.m., Monday through Friday, except Federal holidays. Comments may be submitted via fax to (425) 227–1232. Comments may also be sent via the Internet using the following address: 9–anm–nprmcomment@faa.gov. Comments sent via fax or the Internet must contain ''Docket No. 2000–NM–33–AD'' in the subject line and need not be submitted in triplicate. Comments sent via the Internet as attached electronic files must be formatted in Microsoft Word 97 for Windows or ASCII text.

The service information referenced in the proposed rule may be obtained from Boeing Commercial Aircraft Group, Long Beach Division, 3855 Lakewood Boulevard, Long Beach, California 90846, Attention: Technical Publications Business Administration, Dept. C1–L51 (2–60). This information may be examined at the FAA, Transport Airplane Directorate, 1601 Lind Avenue, SW., Renton, Washington; or at the FAA, Transport Airplane Directorate, Los Angeles Aircraft Certification Office, 3960 Paramount Boulevard, Lakewood, California.

FOR FURTHER INFORMATION CONTACT: Brett Portwood, Aerospace Engineer, Systems and Equipment Branch, ANM–130L, FAA, Transport Airplane Directorate, Los Angeles Aircraft Certification Office, 3960 Paramount Boulevard, Lakewood, California 90712–4137; telephone (562) 627–5350; fax (562) 627–5210.

SUPPLEMENTARY INFORMATION:

Comments Invited

Interested persons are invited to participate in the making of the proposed rule by submitting such written data, views, or arguments as they may desire. Communications shall identify the Rules Docket number and be submitted in triplicate to the address specified above. All communications received on or before the closing date for comments, specified above, will be considered before taking action on the proposed rule. The proposals contained in this notice may be changed in light of the comments received.

Submit comments using the following format:

- Organize comments issue-by-issue. For example, discuss a request to change the compliance time and a request to change the service bulletin reference as two separate issues.
- For each issue, state what specific change to the proposed AD is being requested.
- Include justification (*e.g.,* reasons or data) for each request.

Comments are specifically invited on the overall regulatory, economic, environmental, and energy aspects of the proposed rule. All comments submitted will be available, both before and after the closing date for comments, in the Rules Docket for examination by interested persons. A report summarizing each FAA-public contact concerned with the substance of this proposal will be filed in the Rules Docket.

Commenters wishing the FAA to acknowledge receipt of their comments submitted in response to this notice must submit a self-addressed, stamped postcard on which the following statement is made: ''Comments to Docket Number 2000–NM–33–AD.'' The postcard will be date stamped and returned to the commenter.

Availability of NPRMs

Any person may obtain a copy of this NPRM by submitting a request to the FAA, Transport Airplane Directorate, ANM–114, Attention: Rules Docket No. 2000–NM–33–AD, 1601 Lind Avenue, SW., Renton, Washington 98055–4056.

Discussion

As part of its practice of re-examining all aspects of the service experience of a particular aircraft whenever an accident occurs, the FAA has become aware of an incident of arcing between a power feeder cable and terminal strip support bracket on a McDonnell Douglas Model MD–11 series airplane. Investigation revealed that the possibility exists for such arcing to occur throughout the airplane where power feeder cables are improperly stacked in conjunction with low base terminal strips. This condition, if not corrected, could result in arcing and sparking damage to the power feeder cables, terminal strips, and adjacent structure, and consequent smoke and fire in the center accessroy comparment (CAC).

This incident is not considered to be related to an accident that occurred off the coast of Nova Scotia involving a McDonnell Douglas Model MD–11 series airplane. The cause of that accident is still under investigation.

Other Related Rulemaking

The FAA, in conjunction with Boeing and operators of Model MD–11 series airplanes, is continuing to review all aspects of the service history of those airplanes to identify potential unsafe conditions and to take appropriate corrective actions. This airworthiness directive (AD) is one of a series of actions identified during that process. The process is continuing and the FAA may consider additional rulemaking actions as further results of the review become available.

Explanation of Relevant Service Information

The FAA has reviewed and approved McDonnell Douglas Alert Service Bulletin MD11–24A097, dated April 3, 2000, which describes the following procedures:

- Performing a one-time general visual inspection to detect chafing or damage of the electrical wires leading to the terminal strips in the center accessory compartment area; and corrective actions, if necessary. The corrective actions include replacing the terminal strip with a like part; sealing screw heads of replaced terminal strips; repairing damage; and replacing damaged wires with new wires.
- Revising the wire connection stack up of certain cable terminals at the electrical power center bays in the center accessory compartment.
- Replacing certain terminal strips with new strips and removing the applicable nameplate at electrical power center bays.

Explanation of Requirements of Proposed Rule

Since an unsafe condition has been identified that is likely to exist or develop on other products of this same type design, the proposed AD would require accomplishment of the actions specified in the service bulletin described previously.

Cost Impact

There are approximately 151 Model MD–11 series airplanes of the affected design in the worldwide fleet. The FAA estimates that 59 airplanes of U.S. registry would be affected by this proposed AD, that it would take approximately between 6 and 8 work hours per airplane depending on the configuration of the airplane to accomplish the proposed actions, and that the average labor rate is $60 per work hour. Required parts would cost approximately between $1,091 and $1,256 per airplane depending on the configuration of the airplane. Based on these figures, the cost impact of the proposed AD on U.S. operators is estimated to be between $85,609 and $102,424, or between $1,451 and $1,736 per airplane.

The cost impact figure discussed above is based on assumptions that no operator has yet accomplished any of the proposed requirements of this AD action, and that no operator would accomplish those actions in the future if this proposed AD were not adopted. The cost impact figures discussed in AD rulemaking actions represent only the time necessary to perform the specific actions actually required by the AD. These figures typically do not include incidental costs, such as the time required to gain access and close up, planning time, or time necessitated by other administrative actions.

Regulatory Impact

The regulations proposed herein would not have a substantial direct effect on the States, on the relationship between the national Government and the States, or on the distribution of power and responsibilities among the various levels of government. Therefore, it is determined that this proposal would not have federalism implications under Executive Order 13132.

For the reasons discussed above, I certify that this proposed regulation (1) Is not a ''significant regulatory action'' under Executive Order 12866; (2) is not a ''significant rule'' under the DOT Regulatory Policies and Procedures (44 FR 11034, February 26, 1979); and (3) if promulgated, will not have a significant economic impact, positive or negative, on a substantial number of small entities under the criteria of the Regulatory Flexibility Act. A copy of the draft regulatory evaluation prepared for this action is contained in the Rules Docket. A copy of it may be obtained by contacting the Rules Docket at the location provided under the caption **ADDRESSES.**

List of Subjects in 14 CFR Part 39

Air transportation, Aircraft, Aviation safety, Safety.

The Proposed Amendment

Accordingly, pursuant to the authority delegated to me by the Administrator, the Federal Aviation Administration proposes to amend part 39 of the Federal Aviation Regulations (14 CFR part 39) as follows:

PART 39—AIRWORTHINESS DIRECTIVES

1. The authority citation for part 39 continues to read as follows:

Authority: 49 U.S.C. 106(g), 40113, 44701.

§ 39.13 [Amended]

2. Section 39.13 is amended by adding the following new airworthiness directive:

McDonnell Douglas: Docket 2000–NM–33–AD.

Applicability: Model MD–11 series airplanes, as listed in McDonnell Douglas Alert Service Bulletin MD11–24A097, dated April 3, 2000; certificated in any category.

Note 1: This AD applies to each airplane identified in the preceding applicability provision, regardless of whether it has been modified, altered, or repaired in the area subject to the requirements of this AD. For airplanes that have been modified, altered, or repaired so that the performance of the requirements of this AD is affected, the owner/operator must request approval for an alternative method of compliance in accordance with paragraph (d) of this AD. The request should include an assessment of the effect of the modification, alteration, or repair on the unsafe condition addressed by this AD; and, if the unsafe condition has not been eliminated, the request should include specific proposed actions to address it.

Compliance: Required as indicated, unless accomplished previously.

To prevent arcing and sparking damage to the power feeder cables, terminal strips, and adjacent structure, and consequent smoke and fire in the center accessory compartment, accomplish the following:

Inspection

(a) Within 12 months after the effective date of this AD, perform a one-time general visual inspection to detect chafing or damage of the electrical wires leading to the terminal strips in the center accessory compartment area, in accordance with McDonnell Douglas Alert Service Bulletin MD11–24A097, dated April 3, 2000.

Note 2: For the purposes of this AD, a general visual inspection is defined as ''A visual examination of an interior or exterior area, installation, or assembly to detect obvious damage, failure, or irregularity. This level of inspection is made under normally available lighting conditions such as daylight, hangar lighting, flashlight, or drop-light, and may require removal or opening of access panels or doors. Stands, ladders, or platforms may be required to gain proximity to the area being checked.''

Condition 1 (No Chafing or Damage)

(1) If no chafing or damage is detected, no further action is required by this paragraph.

Condition 2 (Evidence of Chafing or Damage on Terminal Strips)

(2) If any chafing or damage is detected on the terminal strips, before further flight, replace the terminal strip with a like part and seal screw heads of replaced terminal strips, in accordance with the service bulletin.

Condition 3 (Chafing or Damage Within Limits)

(3) If any chafing is detected and if any damage is detected within the limits specified in the service bulletin, before further flight, repair damage in accordance with the service bulletin.

Condition 4 (Chafing or Damage Beyond Limits)

(4) If any chafing is detected and if any damage is detected beyond the limits specified in the service bulletin, before further flight, replace damaged wires with new wires in accordance with the service bulletin.

Revise Wire Connection of the Cable Terminal Strips

(b) Within 12 months after the effective date of this AD, revise the wire connection stack up of certain cable terminals at the electrical power center bays in the center accessory compartment in accordance with McDonnell Douglas Alert Service Bulletin MD11–24A097, dated April 3, 2000.

Replacement of Terminal Strips and Removal of Namplate

(c) Within 12 months after the effective date of this AD, replace the terminal strips with new strips and remove the applicable nameplate at electrical power center bays in the center accessory compartment, in accordance with McDonnell Douglas Alert Service Bulletin MD11–24A097, dated April 3, 2000.

Alternative Methods of Compliance

(d) An alternative method of compliance or adjustment of the compliance time that provides an acceptable level of safety may be used if approved by the Manager, Los Angeles Aircraft Certification Office (ACO), FAA, Transport Airplane Directorate. Operators shall submit their requests through an appropriate FAA Principal Maintenance Inspector, who may add comments and then send it to the Manager, Los Angeles ACO.

Note 3: Information concerning the existence of approved alternative methods of

compliance with this AD, if any, may be obtained from the Los Angeles ACO.

Special Flight Permit

(e) Special flight permits may be issued in accordance with sections 21.197 and 21.199 of the Federal Aviation Regulations (14 CFR 21.197 and 21.199) to operate the airplane to a location where the requirements of this AD can be accomplished.

Issued in Renton, Washington, on July 14, 2000.

John J. Hickey,

Manager, Transport Airplane Directorate, Aircraft Certification Service.

[FR Doc. 00–18397 Filed 7–26–00; 8:45 am]

BILLING CODE 4910–13–U

DEPARTMENT OF TRANSPORTATION

Federal Aviation Administration

14 CFR Part 39

[Docket No. 2000–NM–34–AD]

RIN 2120–AA64

Airworthiness Directives; McDonnell Douglas Model MD–11 Series Airplanes

AGENCY: Federal Aviation Administration, DOT.

ACTION: Notice of proposed rulemaking (NPRM).

SUMMARY: This document proposes the adoption of a new airworthiness directive (AD) that is applicable to certain McDonnell Douglas Model MD–11 series airplanes. This proposal would require replacing the ground support bracket(s); and rerouting the ground cables of the galley external power and main external power, or ground cables of the main external power; as applicable. This action is necessary to prevent arcing and heat damage to the attachment points of the main external and galley power receptacle ground wire, insulation blankets outboard and aft of the receptacle area, and adjacent power cables, which could result in smoke and fire in the forward cargo compartment. This action is intended to address the identified unsafe condition.

DATES: Comments must be received by September 11, 2000.

ADDRESSES: Submit comments in triplicate to the Federal Aviation Administration (FAA), Transport Airplane Directorate, ANM–114, Attention: Rules Docket No. 2000–NM–34–AD, 1601 Lind Avenue, SW., Renton, Washington 98055–4056. Comments may be inspected at this location between 9 a.m. and 3 p.m., Monday through Friday, except Federal holidays. Comments may be submitted via fax to (425) 227–1232. Comments may also be sent via the Internet using the following address: 9-anm-nprmcomment@faa.gov. Comments sent via fax or the Internet must contain ''Docket No. 2000–NM–34–AD'' in the subject line and need not be submitted in triplicate. Comments sent via the Internet as attached electronic files must be formatted in Microsoft Word 97 for Windows or ASCII text.

The service information referenced in the proposed rule may be obtained from Boeing Commercial Aircraft Group, Long Beach Division, 3855 Lakewood Boulevard, Long Beach, California 90846, Attention: Technical Publications Business Administration, Dept. C1–L51 (2–60). This information may be examined at the FAA, Transport Airplane Directorate, 1601 Lind Avenue, SW., Renton, Washington; or at the the FAA, Transport Airplane Directorate, Los Angeles Aircraft Certification Office, 3960 Paramount Boulevard, Lakewood, California.

FOR FURTHER INFORMATION CONTACT: Brett Portwood, Aerospace Engineer, Systems and Equipment Branch, ANM–130L, FAA, Transport Airplane Directorate, Los Angeles Aircraft Certification Office, 3960 Paramount Boulevard, Lakewood, California 90712–4137; telephone (562) 627–5350; fax (562) 627–5210.

SUPPLEMENTARY INFORMATION:

Comments Invited

Interested persons are invited to participate in the making of the proposed rule by submitting such written data, views, or arguments as they may desire. Communications shall identify the Rules Docket number and be submitted in triplicate to the address specified above. All communications received on or before the closing date for comments, specified above, will be considered before taking action on the proposed rule. The proposals contained in this notice may be changed in light of the comments received.

Submit comments using the following format:

- Organize comments issue-by-issue. For example, discuss a request to change the compliance time and a request to change the service bulletin reference as two separate issues.
- For each issue, state what specific change to the proposed AD is being requested.
- Include justification (*e.g.,* reasons or data) for each request.

Comments are specifically invited on the overall regulatory, economic, environmental, and energy aspects of the proposed rule. All comments submitted will be available, both before and after the closing date for comments, in the Rules Docket for examination by interested persons. A report summarizing each FAA-public contact concerned with the substance of this proposal will be filed in the Rules Docket.

Commenters wishing the FAA to acknowledge receipt of their comments submitted in response to this notice must submit a self-addressed, stamped postcard on which the following statement is made: ''Comments to Docket Number 2000–NM–34–AD.'' The postcard will be date stamped and returned to the commenter.

Availability of NPRMs

Any person may obtain a copy of this NPRM by submitting a request to the FAA, Transport Airplane Directorate, ANM–114, Attention: Rules Docket No. 2000–NM–34–AD, 1601 Lind Avenue, SW., Renton, Washington 98055–4056.

Discussion

As part of its practice of re-examining all aspects of the service experience of a particular aircraft whenever an accident occurs, the FAA has been informed by the airplane manufacturer of a design analysis of the grounding system of the galley external and main external ground cables on McDonnell Douglas Model MD–11 series airplanes. The results of the analysis revealed that the existing design of the subject grounding system does not adequately prevent arcing and heat damage to the attachment points of the main external and galley power receptacle ground wire, insulation blankets outboard and aft of the receptacle area, and adjacent power cables. These conditions, if not corrected, could result in smoke and fire in the forward cargo compartment.

Other Related Rulemaking

The FAA, in conjunction with Boeing and operators of Model MD–11 series airplanes, is continuing to review all aspects of the service history of those airplanes to identify potential unsafe conditions and to take appropriate corrective actions. This airworthiness directive (AD) is one of a series of actions identified during that process. The process is continuing and the FAA may consider additional rulemaking actions as further results of the review become available.

The FAA has previously issued AD 95–25–04, amendment 39–9448 (61 FR 691, January 10, 1996) that concerns that galley external power receptacle on certain Model MD–11 series airplanes. That AD requires an inspection and other specified actions to ensure that the

ground stud assemblies at three locations of the airplane are installed properly and torqued to certain specifications, to verify the integrity of the components of the ground stud assemblies, and to detect heat damage in adjacent areas; and correction of any discrepancy.

Explanation of Relevant Service Information

The FAA has reviewed and approved McDonnell Douglas Alert Service Bulletin MD11–24A138, dated April 3, 2000, which describes procedures for replacing the ground support bracket(s); and rerouting the ground cables of the galley external power and main external power, or ground cables of the main external power, as applicable. Accomplishment of the actions specified in the service bulletin is intended to adequately address the identified unsafe condition.

Explanation of Requirements of Proposed Rule

Since an unsafe condition has been identified that is likely to exist or develop on other products of this same type design, the proposed AD would require accomplishment of the actions specified in the service bulletin described previously.

Cost Impact

There are approximately 149 Model MD–11 series airplanes of the affected design in the worldwide fleet. The FAA estimates that 55 airplanes of U.S. registry would be affected by this proposed AD, that it would take approximately between 1 (for Group 1 airplanes) and 2 (for Group 2 airplanes) work hours per airplane to accomplish the proposed actions, and that the average labor rate is $60 per work hour. Required parts would cost approximately $337 (for Group 1 airplanes) or $647 (for Group 2 airplanes) per airplane. Based on these figures, the cost impact of the proposed AD on U.S. operators is estimated to be $21,835, or $397 per airplane (for Group 1 airplanes); or $42,185, or $767 per airplane (for Group 2 airplanes).

The cost impact figures discussed above are based on assumptions that no operator has yet accomplished any of the proposed requirements of this AD action, and that no operator would accomplish those actions in the future if this proposed AD were not adopted. The cost impact figures discussed in AD rulemaking actions represent only the time necessary to perform the specific actions actually required by the AD. These figures typically do not include incidental costs, such as the time required to gain access and close up, planning time, or time necessitated by other administrative actions.

Regulatory Impact

The regulations proposed herein would not have a substantial direct effect on the States, on the relationship between the national Government and the States, or on the distribution of power and responsibilities among the various levels of government. Therefore, it is determined that this proposal would not have federalism implications under Executive Order 13132.

For the reasons discussed above, I certify that this proposed regulation (1) is not a ''significant regulatory action'' under Executive Order 12866; (2) is not a ''significant rule'' under the DOT Regulatory Policies and Procedures (44 FR 11034, February 26, 1979); and (3) if promulgated, will not have a significant economic impact, positive or negative, on a substantial number of small entities under the criteria of the Regulatory Flexibility Act. A copy of the draft regulatory evaluation prepared for this action is contained in the Rules Docket. A copy of it may be obtained by contacting the Rules Docket at the location provided under the caption **ADDRESSES.**

List of Subjects in 14 CFR Part 39

Air transportation, Aircraft, Aviation safety, Safety.

The Proposed Amendment

Accordingly, pursuant to the authority delegated to me by the Administrator, the Federal Aviation Administration proposes to amend part 39 of the Federal Aviation Regulations (14 CFR part 39) as follows:

PART 39—AIRWORTHINESS DIRECTIVES

1. The authority citation for part 39 continues to read as follows:

Authority: 49 U.S.C. 106(g), 40113, 44701.

§ 39.13 [Amended]

2. Section 39.13 is amended by adding the following new airworthiness directive:

McDonnell Douglas: Docket 2000–NM–34–AD.

Applicability: Model MD–11 series airplanes, as listed in McDonnell Douglas Alert Service Bulletin MD11–24A138, dated April 3, 2000; certificated in any category.

Note 1: This AD applies to each airplane identified in the preceding applicability provision, regardless of whether it has been modified, altered, or repaired in the area subject to the requirements of this AD. For airplanes that have been modified, altered, or repaired so that the performance of the requirements of this AD is affected, the owner/operator must request approval for an alternative method of compliance in accordance with paragraph (b) of this AD. The request should include an assessment of the effect of the modification, alteration, or repair on the unsafe condition addressed by this AD; and, if the unsafe condition has not been eliminated, the request should include specific proposed actions to address it.

Compliance: Required as indicated, unless accomplished previously.

To prevent arcing and heat damage to the attachment points of the main external and galley power receptacle ground wire, insulation blankets outboard and aft of the receptacle area, and adjacent power cables, which could result in smoke and fire in the forward cargo compartment, accomplish the following:

Replacement and Reroute

(a) Within 12 months after the effective date of this AD, accomplish the actions specified in paragraph (a)(1) or (a)(2) of this AD, as applicable, in accordance with McDonnell Douglas Alert Service Bulletin MD11–24A128, dated April 3, 2000.

(1) For Group 1 airplanes listed in the service bulletin: Replace the ground support brackets with new brackets and reroute the ground cables of the galley external power and main external power.

(2) For Group 2 airplanes listed in the service bulletin: Replace the ground support bracket and reroute the ground cables of the main external power.

Alternative Methods of Compliance

(b) An alternative method of compliance or adjustment of the compliance time that provides an acceptable level of safety may be used if approved by the Manager, Los Angeles Aircraft Certification Office (ACO), FAA, Transport Airplane Directorate. Operators shall submit their requests through an appropriate FAA Principal Maintenance Inspector, who may add comments and then send it to the Manager, Los Angeles ACO.

Note 2: Information concerning the existence of approved alternative methods of compliance with this AD, if any, may be obtained from the Los Angeles ACO.

Special Flight Permit

(c) Special flight permits may be issued in accordance with sections 21.197 and 21.199 of the Federal Aviation Regulations (14 CFR 21.197 and 21.199) to operate the airplane to a location where the requirements of this AD can be accomplished.

Issued in Renton, Washington, on July 14, 2000.

John J. Hickey,

Manager, Transport Airplane Directorate, Aircraft Certification Service.

[FR Doc. 00–18398 Filed 7–26–00; 8:45 am]

BILLING CODE 4910–13–U

DEPARTMENT OF TRANSPORTATION

Federal Aviation Administration

14 CFR Part 39

[Docket No. 2000–NM–35–AD]

RIN 2120–AA64

Airworthiness Directives; McDonnell Douglas Model MD–11 Series Airplanes

AGENCY: Federal Aviation Administration, DOT.

ACTION: Notice of proposed rulemaking (NPRM).

SUMMARY: This document proposes the adoption of a new airworthiness directive (AD) that is applicable to certain McDonnell Douglas Model MD–11 series airplanes. This proposal would require an inspection of the electrical wires routed above the door actuation cables for minimum .50-inch clearance with the door in the open and closed position, damage due to chafing or electrical arcing, or damaged door actuation cables; and corrective actions, if necessary. This action is necessary to prevent damaged electrical wires or damaged door actuation cables due to chafing by the cables during operation of the forward passenger door, which could result in electrical arcing and consequent smoke in the area above the forward passenger door. This action is intended to address the identified unsafe condition.

DATES: Comments must be received by September 11, 2000.

ADDRESSES: Submit comments in triplicate to the Federal Aviation Administration (FAA), Transport Airplane Directorate, ANM–114, Attention: Rules Docket No. 2000–NM–35–AD, 1601 Lind Avenue, SW., Renton, Washington 98055–4056. Comments may be inspected at this location between 9 a.m. and 3 p.m., Monday through Friday, except Federal holidays. Comments may be submitted via fax to (425) 227–1232. Comments may also be sent via the Internet using the following address: 9-anm-nprmcomment@faa.gov. Comments sent via fax or the Internet must contain ''Docket No. 2000–NM–35–AD'' in the subject line and need not be submitted in triplicate. Comments sent via the Internet as attached electronic files must be formatted in Microsoft Word 97 for Windows or ASCII text.

The service information referenced in the proposed rule may be obtained from Boeing Commercial Aircraft Group, Long Beach Division, 3855 Lakewood Boulevard, Long Beach, California 90846, Attention: Technical Publications Business Administration, Dept. C1–L51 (2–60). This information may be examined at the FAA, Transport Airplane Directorate, 1601 Lind Avenue, SW., Renton, Washington; or at the FAA, Transport Airplane Directorate, Los Angeles Aircraft Certification Office, 3960 Paramount Boulevard, Lakewood, California.

FOR FURTHER INFORMATION CONTACT: Brett Portwood, Aerospace Engineer, Systems and Equipment Branch, ANM–130L, FAA, Transport Airplane Directorate, Los Angeles Aircraft Certification Office, 3960 Paramount Boulevard, Lakewood, California 90712–4137; telephone (562) 627–5350; fax (562) 627–5210.

SUPPLEMENTARY INFORMATION:

Comments Invited

Interested persons are invited to participate in the making of the proposed rule by submitting such written data, views, or arguments as they may desire. Communications shall identify the Rules Docket number and be submitted in triplicate to the address specified above. All communications received on or before the closing date for comments, specified above, will be considered before taking action on the proposed rule. The proposals contained in this notice may be changed in light of the comments received.

Submit comments using the following format:

- Organize comments issue-by-issue. For example, discuss a request to change the compliance time and a request to change the service bulletin reference as two separate issues.
- For each issue, state what specific change to the proposed AD is being requested.
- Include justification (*e.g.,* reasons or data) for each request.

Comments are specifically invited on the overall regulatory, economic, environmental, and energy aspects of the proposed rule. All comments submitted will be available, both before and after the closing date for comments, in the Rules Docket for examination by interested persons. A report summarizing each FAA-public contact concerned with the substance of this proposal will be filed in the Rules Docket.

Commenters wishing the FAA to acknowledge receipt of their comments submitted in response to this notice must submit a self-addressed, stamped postcard on which the following statement is made: ''Comments to Docket Number 2000–NM–35–AD.'' The postcard will be date stamped and returned to the commenter.

Availability of NPRMs

Any person may obtain a copy of this NPRM by submitting a request to the FAA, Transport Airplane Directorate, ANM–114, Attention: Rules Docket No. 2000–NM–35–AD, 1601 Lind Avenue, SW., Renton, Washington 98055–4056.

Discussion

As part of its practice of re-examining all aspects of the service experience of a particular aircraft whenever an accident occurs, the FAA has become aware of an incident of an electrical wire chafed by an actuation cable of the forward passenger door when the door was in the full open position. This incident occurred on a McDonnell Douglas Model MD–11 series airplane. Investigation revealed that the existing routing of the electrical wires of the forward passenger door could cause the electrical wires to be chafed by the door actuation cables during operation of the door. Investigation also revealed that the electrical wires were not routed properly during manufacturing of the airplane. This condition, if not corrected, could result in damaged electrical wires or damaged door actuation cables, which could result in electrical arcing and consequent smoke in the area above the forward passenger door.

This incident is not considered to be related to an accident that occurred off the coast of Nova Scotia involving a McDonnell Douglas Model MD–11 series airplane. The cause of that accident is still under investigation.

Other Related Rulemaking

The FAA, in conjunction with Boeing and operators of Model MD–11 series airplanes, is continuing to review all aspects of the service history of those airplanes to identify potential unsafe conditions and to take appropriate corrective actions. This airworthiness directive (AD) is one of a series of actions identified during that process. The process is continuing and the FAA may consider additional rulemaking actions as further results of the review become available.

Explanation of Relevant Service Information

The FAA has reviewed and approved McDonnell Douglas Alert Service Bulletin MD11–24A182, dated April 3, 2000, which describes procedures for a one-time general visual inspection of the electrical wires routed above the door actuation cables for minimum .50-inch clearance with the door in the open and closed position, damage due to chafing or electrical arcing, or damaged door actuation cables; and corrective

actions, if necessary. The corrective actions include loosening the wire clamps as necessary; repositioning electrical wires to provide minimum clearance; tightening wire clamps; replacing damaged electrical wires with new wires or repairing damaged wires; and replacing damaged door actuation cables with new cables. Accomplishment of the actions specified in the service bulletin is intended to adequately address the identified unsafe condition.

Explanation of Requirements of Proposed Rule

Since an unsafe condition has been identified that is likely to exist or develop on other products of this same type design, the proposed AD would require accomplishment of the actions specified in the service bulletin described previously.

Cost Impact

There are approximately 187 Model MD–11 series airplanes of the affected design in the worldwide fleet. The FAA estimates that 64 airplanes of U.S. registry would be affected by this proposed AD, that it would take approximately 2 work hours per airplane to accomplish the proposed inspection, and that the average labor rate is $60 per work hour. Based on these figures, the cost impact of the inspection proposed by this AD on U.S. operators is estimated to be $7,680, or $120 per airplane.

The cost impact figure discussed above is based on assumptions that no operator has yet accomplished any of the proposed requirements of this AD action, and that no operator would accomplish those actions in the future if this proposed AD were not adopted. The cost impact figures discussed in AD rulemaking actions represent only the time necessary to perform the specific actions actually required by the AD. These figures typically do not include incidental costs, such as the time required to gain access and close up, planning time, or time necessitated by other administrative actions.

Regulatory Impact

The regulations proposed herein would not have a substantial direct effect on the States, on the relationship between the national Government and the States, or on the distribution of power and responsibilities among the various levels of government. Therefore, it is determined that this proposal would not have federalism implications under Executive Order 13132.

For the reasons discussed above, I certify that this proposed regulation (1) Is not a ''significant regulatory action'' under Executive Order 12866; (2) is not a ''significant rule'' under the DOT Regulatory Policies and Procedures (44 FR 11034, February 26, 1979); and (3) if promulgated, will not have a significant economic impact, positive or negative, on a substantial number of small entities under the criteria of the Regulatory Flexibility Act. A copy of the draft regulatory evaluation prepared for this action is contained in the Rules Docket. A copy of it may be obtained by contacting the Rules Docket at the location provided under the caption **ADDRESSES.**

List of Subjects in 14 CFR Part 39

Air transportation, Aircraft, Aviation safety, Safety.

The Proposed Amendment

Accordingly, pursuant to the authority delegated to me by the Administrator, the Federal Aviation Administration proposes to amend part 39 of the Federal Aviation Regulations (14 CFR part 39) as follows:

PART 39—AIRWORTHINESS DIRECTIVES

1. The authority citation for part 39 continues to read as follows:

Authority: 49 U.S.C. 106(g), 40113, 44701.

§ 39.13 [Amended]

2. Section 39.13 is amended by adding the following new airworthiness directive:

McDonnell Douglas: Docket 2000–NM–35–AD.

Applicability: Model MD–11 series airplanes, as listed in McDonnell Douglas Alert Service Bulletin MD11–24A182, dated April 3, 2000; certificated in any category.

Note 1: This AD applies to each airplane identified in the preceding applicability provision, regardless of whether it has been modified, altered, or repaired in the area subject to the requirements of this AD. For airplanes that have been modified, altered, or repaired so that the performance of the requirements of this AD is affected, the owner/operator must request approval for an alternative method of compliance in accordance with paragraph (c) of this AD. The request should include an assessment of the effect of the modification, alteration, or repair on the unsafe condition addressed by this AD; and, if the unsafe condition has not been eliminated, the request should include specific proposed actions to address it.

Compliance: Required as indicated, unless accomplished previously.

To prevent damaged electrical wires or damaged door actuation cables due to chafing by the cables during operation of the forward passenger door, which could result in electrical arcing and consequent smoke in the area above the forward passenger door, accomplish the following:

Inspection

(a) Except as provided by paragarph (b) of this AD, within 6 months after the effective date of this AD, perform a one-time general visual inspection of the electrical wires routed above the door actuation cables for minimum .50-inch clearance with the door in the open and closed position, damage due to chafing or electrical arcing, or damaged door actuation cables, in accordance with McDonnell Douglas Alert Service Bulletin MD11–24A182, dated April 3, 2000.

Note 2: For the purposes of this AD, a general visual inspection is defined as ''A visual examination of an interior or exterior area, installation, or assembly to detect obvious damage, failure, or irregularity. This level of inspection is made under normally available lighting conditions such as daylight, hangar lighting, flashlight, or drop-light, and may require removal or opening of access panels or doors. Stands, ladders, or platforms may be required to gain proximity to the area being checked.''

Condition 1 (Minimum Clearance and No Chafed Electrical Wiring or Damaged Door Actuation Cables)

(1) If minimum .50-inch clearance exists between the electrical wires and door actuation cables with the door in the open and closed positions, and if no chafed electrical wiring or damaged door actuation cable is detected, no further action is required by this AD.

Condition 2 (Less Than Minimum Clearance, No Chafed Electrical Wiring or Damaged Door Actuation Cables)

(2) If less than .50-inch clearance exists between the electrical wires and door actuation cables with the door in the open and closed positions, and if no chafed electrical wiring or damaged door actuation cable is detected, before further flight, loosen wire clamps as necessary, reposition electrical wires to provide minimum clearance, and tighten wire clamps, in accordance with the service bulletin.

Condition 3 (Less Than Minimum Clearance, Chafed Electrical Wiring or Damaged Door Actuation Cables)

(3) If less than .50-inch clearance exists between the electrical wires and door actuation cables with the door in the open and closed positions, and if any chafed electrical wiring or damaged door actuation cable is detected, before further flight, replace damaged electrical wires with new wires or repair damaged wires, loosen wire clamps as necessary, reposition electrical wires to provide minimum clearance, tighten wire clamps, and replace damaged door actuation cables with new cables, in accordance with the service bulletin.

Exception to Inspection Required in Paragraph (a) of This AD

(b) For Model MD–11 series airplanes, the inspection required by paragraph (a) of this AD is only applicable to functioning doors. For Model MD–11F series airplanes or Model MD–11 series airplanes converted to a freighter configuration, equipped with one or more disabled non-functioning doors that do

not have door acuating cables, the inspection is NOT required for those disabled doors.

Alternative Methods of Compliance

(c) An alternative method of compliance or adjustment of the compliance time that provides an acceptable level of safety may be used if approved by the Manager, Los Angeles Aircraft Certification Office (ACO), FAA, Transport Airplane Directorate. Operators shall submit their requests through an appropriate FAA Principal Maintenance Inspector, who may add comments and then send it to the Manager, Los Angeles ACO.

Note 3: Information concerning the existence of approved alternative methods of compliance with this AD, if any, may be obtained from the Los Angeles ACO.

Special Flight Permit

(d) Special flight permits may be issued in accordance with sections 21.197 and 21.199 of the Federal Aviation Regulations (14 CFR 21.197 and 21.199) to operate the airplane to a location where the requirements of this AD can be accomplished.

Issued in Renton, Washington, on July 14, 2000.

John J. Hickey,

Manager, Transport Airplane Directorate, Aircraft Certification Service.

[FR Doc. 00–18399 Filed 7–26–00; 8:45 am]

BILLING CODE 4910–13–U

DEPARTMENT OF TRANSPORTATION

Federal Aviation Administration

14 CFR Part 39

[Docket No. 2000–NM–36–AD]

RIN 2120–AA64

Airworthiness Directives; McDonnell Douglas Model MD–11 Series Airplanes

AGENCY: Federal Aviation Administration, DOT.

ACTION: Notice of proposed rulemaking (NPRM).

SUMMARY: This document proposes the adoption of a new airworthiness directive (AD) that is applicable to certain McDonnell Douglas Model MD–11 series airplanes. This proposal would require a one-time detailed visual inspection to detect discrepancies of all electrical wiring installations in various areas of the airplane; and corrective actions, if necessary. This action is necessary to prevent electrical arcing and/or heat damaged wires due to improper wire installations during manufacture and/or maintenance of the airplane, and consequent fire and smoke in various areas of the airplane. This action is intended to address the identified unsafe condition.

DATES: Comments must be received by September 11, 2000.

ADDRESSES: Submit comments in triplicate to the Federal Aviation Administration (FAA), Transport Airplane Directorate, ANM–114, Attention: Rules Docket No. 2000–NM–36–AD, 1601 Lind Avenue, SW., Renton, Washington 98055–4056. Comments may be inspected at this location between 9 a.m. and 3 p.m., Monday through Friday, except Federal holidays. Comments may be submitted via fax to (425) 227–1232. Comments may also be sent via the Internet using the following address: 9-anm-nprmcomment@faa.gov. Comments sent via fax or the Internet must contain ''Docket No. 2000–NM–36–AD'' in the subject line and need not be submitted in triplicate. Comments sent via the Internet as attached electronic files must be formatted in Microsoft Word 97 for Windows or ASCII text.

The service information referenced in the proposed rule may be obtained from Boeing Commercial Aircraft Group, Long Beach Division, 3855 Lakewood Boulevard, Long Beach, California 90846, Attention: Technical Publications Business Administration, Dept. C1–L51 (2–60). This information may be examined at the FAA, Transport Airplane Directorate, 1601 Lind Avenue, SW., Renton, Washington; or at the FAA, Transport Airplane Directorate, Los Angeles Aircraft Certification Office, 3960 Paramount Boulevard, Lakewood, California.

FOR FURTHER INFORMATION CONTACT: Brett Portwood, Aerospace Engineer, Systems and Equipment Branch, ANM–130L, FAA, Transport Airplane Directorate, Los Angeles Aircraft Certification Office, 3960 Paramount Boulevard, Lakewood, California 90712–4137; telephone (562) 627–5350; fax (562) 627–5210.

SUPPLEMENTARY INFORMATION:

Comments Invited

Interested persons are invited to participate in the making of the proposed rule by submitting such written data, views, or arguments as they may desire. Communications shall identify the Rules Docket number and be submitted in triplicate to the address specified above. All communications received on or before the closing date for comments, specified above, will be considered before taking action on the proposed rule. The proposals contained in this notice may be changed in light of the comments received.

Submit comments using the following format:

- Organize comments issue-by-issue. For example, discuss a request to change the compliance time and a request to change the service bulletin reference as two separate issues.
- For each issue, state what specific change to the proposed AD is being requested.
- Include justification (*e.g.,* reasons or data) for each request.

Comments are specifically invited on the overall regulatory, economic, environmental, and energy aspects of the proposed rule. All comments submitted will be available, both before and after the closing date for comments, in the Rules Docket for examination by interested persons. A report summarizing each FAA-public contact concerned with the substance of this proposal will be filed in the Rules Docket.

Commenters wishing the FAA to acknowledge receipt of their comments submitted in response to this notice must submit a self-addressed, stamped postcard on which the following statement is made: ''Comments to Docket Number 2000–NM–36–AD.'' The postcard will be date stamped and returned to the commenter.

Availability of NPRMs

Any person may obtain a copy of this NPRM by submitting a request to the FAA, Transport Airplane Directorate, ANM–114, Attention: Rules Docket No. 2000–NM–36–AD, 1601 Lind Avenue, SW., Renton, Washington 98055–4056.

Discussion

As part of its practice of re-examining all aspects of the service experience of a particular aircraft whenever an accident occurs, the FAA has become aware of several incidents of damaged wire insulation and chafed wires in various areas on McDonnell Douglas Model MD–11 series airplanes. Investigation revealed that the cause of such damage and chafing may be attributed to improper wire installations during manufacture and/or maintenance of the airplane. This condition, if not corrected, could result in electrical arcing and/or heat damaged wires, and consequent fire and smoke in the various areas of the airplane.

These incidents are not considered to be related to an accident that occurred off the coast of Nova Scotia involving a McDonnell Douglas Model MD–11 series airplane. The cause of that accident is still under investigation.

Other Related Rulemaking

The FAA, in conjunction with Boeing and operators of Model MD–11 series airplanes, is continuing to review all

aspects of the service history of those airplanes to identify potential unsafe conditions and to take appropriate corrective actions. This airworthiness directive (AD) is one of a series of actions identified during that process. The process is continuing and the FAA may consider additional rulemaking actions as further results of the review become available.

The FAA has previously issued AD 2000–11–02, amendment 39–11750 (65 FR 34341, May 26, 2000), applicable to certain McDonnell Douglas Model DC–10–10F, DC–10–15, DC–10–30, DC–10–30F, and DC–10–40 series airplanes, and Model MD–11 and 11F series airplanes. That AD currently requires a determination be made of whether, and at what locations, metallized polyethyleneteraphthalate (MPET) insulation blankets are installed, and replacement of MPET insulation blankets with new insulation blankets. The FAA recommends that the actions required by this proposed AD be accomplished immediately after accomplishing the replacement required by AD 2000–11–02. This proposed AD would not affect the current requirements of AD 2000–11–02.

Explanation of Relevant Service Information

The FAA has reviewed and approved the following service bulletins:

- McDonnell Douglas Service Bulletin MD11–24–171, dated April 4, 2000;
- McDonnell Douglas Service Bulletin MD11–24–170, dated April 12, 2000;
- McDonnell Douglas Service Bulletin MD11–24–167, dated April 4, 2000;
- McDonnell Douglas Service Bulletin MD11–24–165, dated April 4, 2000;
- McDonnell Douglas Service Bulletin MD11–24–163, dated April 4, 2000;
- McDonnell Douglas Service Bulletin MD11–24–188, dated April 28, 2000;
- McDonnell Douglas Service Bulletin MD11–24–161, dated April 10, 2000; and
- McDonnell Douglas Service Bulletin MD11–24–162, dated April 10, 2000.

These service bulletins describe procedures for a one-time detailed visual inspection to detect discrepancies of all electrical wiring installations in various areas (*i.e.,* center, aft, and forward cargo compartments; aft, forward, and mid cabin passenger compartment; flight compartment; forward drop ceiling; center accessory compartment; and main avionics compartment) of the airplane; and corrective actions, if necessary. The corrective actions include: repairing cracked, split, or torn wiring insulation; installing a certain size clamp; adjusting or replacing sta-straps; repositioning certain wires or clamps; replacing or repairing certain wires or terminals; and tightening sta-straps, clamps, terminals, and wire bundles. Accomplishment of the actions specified in the service bulletins is intended to adequately address the identified unsafe condition.

Explanation of Requirements of Proposed Rule

Since an unsafe condition has been identified that is likely to exist or develop on other products of this same type design, the proposed AD would require accomplishment of the actions specified in the service bulletins described previously, except as discussed below.

Differences Between the Proposed AD and Relevant Service Information

Paragraphs 3.B.3.K. and 3.B.3.P of the Accomplishment Instructions of the service bulletins described previously do NOT provide instructions for accomplishing corrective actions for certain discrepancies that are detected. Therefore, the FAA finds that the following corrective actions must be accomplished, if necessary, to address the identified unsafe condition of the proposed AD:

- If any screw terminal of the flag lug bus bar is loose, before further flight, retorque to 10 to 11 inch-pounds.
- If no gap between the wire bundle and blanket can be seen when pressure is applied to the blanket, before further flight, reposition wires or clamping so that a gap can been seen when pressure is applied to the blanket.

Cost Impact

There are approximately 182 Model MD–11 series airplanes of the affected design in the worldwide fleet. The FAA estimates that 60 airplanes of U.S. registry would be affected by this proposed AD.

It would take approximately 10 work hours per airplane to accomplish each of the six inspections specified in paragraphs (a)(1), (a)(2), (a)(3), (a)(4), (a)(5), and (a)(6) of this proposed AD, at an average labor rate of $60 per work hour. Based on these figures, the cost impact of these indicated inspections proposed by this AD on U.S. operators is estimated to be $216,000, or $3,600 per airplane.

It would take approximately 5 work hours per airplane to accomplish the inspection specified in paragraph (a)(7) of this proposed AD, at an average labor rate of $60 per work hour. Based on these figures, the cost impact of this indicated inspection proposed by this AD on U.S. operators is estimated to be $18,000, or $300 per airplane.

It would take approximately 12 work hours per airplane to accomplish the inspection specified in paragraph (a)(8) of this proposed AD, at an average labor rate of $60 per work hour. Based on these figures, the cost impact of this indicated inspection proposed by this AD on U.S. operators is estimated to be $43,200, or $720 per airplane.

The cost impact figures discussed above are based on assumptions that no operator has yet accomplished any of the proposed requirements of this AD action, and that no operator would accomplish those actions in the future if this proposed AD were not adopted. The cost impact figures discussed in AD rulemaking actions represent only the time necessary to perform the specific actions actually required by the AD. These figures typically do not include incidental costs, such as the time required to gain access and close up, planning time, or time necessitated by other administrative actions.

Regulatory Impact

The regulations proposed herein would not have a substantial direct effect on the States, on the relationship between the national Government and the States, or on the distribution of power and responsibilities among the various levels of government. Therefore, it is determined that this proposal would not have federalism implications under Executive Order 13132.

For the reasons discussed above, I certify that this proposed regulation (1) Is not a ''significant regulatory action'' under Executive Order 12866; (2) is not a ''significant rule'' under the DOT Regulatory Policies and Procedures (44 FR 11034, February 26, 1979); and (3) if promulgated, will not have a significant economic impact, positive or negative, on a substantial number of small entities under the criteria of the Regulatory Flexibility Act. A copy of the draft regulatory evaluation prepared for this action is contained in the Rules Docket. A copy of it may be obtained by contacting the Rules Docket at the location provided under the caption **ADDRESSES.**

List of Subjects in 14 CFR Part 39

Air transportation, Aircraft, Aviation safety, Safety.

The Proposed Amendment

Accordingly, pursuant to the authority delegated to me by the Administrator, the Federal Aviation Administration proposes to amend part 39 of the Federal Aviation Regulations (14 CFR part 39) as follows:

PART 39—AIRWORTHINESS DIRECTIVES

1. The authority citation for part 39 continues to read as follows:

Authority: 49 U.S.C. 106(g), 40113, 44701.

§ 39.13 [Amended]

2. Section 39.13 is amended by adding the following new airworthiness directive:

McDonnell Douglas: Docket 2000–NM–36–AD.

Applicability: Model MD–11 series airplanes, manufacturer's fuselage numbers 0447 through 0449 inclusive, 0451 through 0464 inclusive, 0466 through 0489 inclusive, 0491 through 0517 inclusive, 0519 through 0552 inclusive, 0554 through 0556 inclusive, 0557, 0558 through 0633 inclusive, and 0635; certificated in any category.

Note 1: This AD applies to each airplane identified in the preceding applicability provision, regardless of whether it has been modified, altered, or repaired in the area subject to the requirements of this AD. For airplanes that have been modified, altered, or repaired so that the performance of the requirements of this AD is affected, the owner/operator must request approval for an alternative method of compliance in accordance with paragraph (e) of this AD. The request should include an assessment of the effect of the modification, alteration, or repair on the unsafe condition addressed by this AD; and, if the unsafe condition has not been eliminated, the request should include specific proposed actions to address it.

Compliance: Required as indicated, unless accomplished previously.

Note 2: The FAA recommends that the actions required by this proposed AD be accomplished immediately after accomplishing the replacement of metallized polyethyleneteraphthalate (MPET) insulation blankets, as required by AD 2000–11–02, amendment 39–11750 (65 FR 34341, May 26, 2000).

To prevent electrical arcing and/or heat damaged wires due to improper wire installations during manufacture and/or maintenance of the airplane, and consequent fire and smoke in various areas of the airplane, accomplish the following:

One-Time Detailed Visual Inspection

(a) Within 5 years after the effective date of this AD, accomplish the actions specified in paragraphs (a)(1), (a)(2), (a)(3), (a)(4), (a)(5), (a)(6), (a)(7), and (a)(8) of this AD, as applicable.

(1) For all airplanes: Perform a one-time detailed visual inspection to detect discrepancies of all electrical wiring installations in the center and aft cargo compartments from stations Y=1521.000 to Y=2007.000, in accordance with paragraph 3.B., ''Work Instructions,'' of the Accomplishment Instructions of McDonnell Douglas Service Bulletin MD11–24–171, dated April 4, 2000.

Note 3: For the purposes of this AD, a detailed visual inspection is defined as: ''An intensive visual examination of a specific structural area, system, installation, or assembly to detect damage, failure, or irregularity. Available lighting is normally supplemented with a direct source of good lighting at intensity deemed appropriate by the inspector. Inspection aids such as mirror, magnifying lenses, etc. may be used. Surface cleaning and elaborate access procedures may be required.''

(2) For all airplanes: Perform a one-time detailed visual inspection to detect discrepancies of all electrical wiring installations in the forward cargo compartment from stations Y=595.000 to Y=6–73.500, in accordance with the paragraph 3.B., ''Work Instructions,'' of the Accomplishment Instructions of McDonnell Douglas Service Bulletin MD11–24–170, dated April 12, 2000.

(3) For all airplanes: Perform a one-time detailed visual inspection to detect discrepancies of all electrical wiring installations in the forward passenger compartment from stations Y=5–11.000 to Y=2007.000, in accordance with the paragraph 3.B., ''Work Instructions,'' of the Accomplishment Instructions of McDonnell Douglas Service Bulletin MD11–24–167, dated April 4, 2000.

(4) For all airplanes: Perform a one-time detailed visual inspection to detect discrepancies of all electrical wiring installations in the forward passenger compartment from stations Y=756.000 to Y=1501.000, in accordance with the paragraph 3.B., ''Work Instructions,'' of the Accomplishment Instructions of McDonnell Douglas Service Bulletin MD11–24–165, dated April 4, 2000.

(5) For all airplanes: Perform a one-time detailed visual inspection to detect discrepancies of all electrical wiring installations in the forward passenger compartment from stations Y=465.000 to Y=755.000, in accordance with the paragraph 3.B., ''Work Instructions,'' of the Accomplishment Instructions of McDonnell Douglas Service Bulletin MD11–24–163, dated April 4, 2000.

(6) For all airplanes: Perform a one-time detailed visual inspection to detect discrepancies of all electrical wiring installations in the flight compartment and forward drop ceilings areas from stations Y=275.000 to Y=464.000, in accordance with the paragraph 3.B., ''Work Instructions,'' of the Accomplishment Instructions of McDonnell Douglas Service Bulletin MD11–24–188, dated April 28, 2000.

(7) For airplanes having manufacturer's fuselage numbers 0447 through 0449 inclusive, 0451 through 0464 inclusive, 0466 through 0489 inclusive, 0491 through 0517 inclusive, 0519 through 0552 inclusive, 0554 through 0556 inclusive, 0557, 0558 through 0633 inclusive: Perform a one-time detailed visual inspection to detect discrepancies of all electrical wiring installations in the center accessory compartment from stations Y=6–50.000 to Y=1179.000, in accordance with the paragraph 3.B., ''Work Instructions,'' of the Accomplishment Instructions of McDonnell Douglas Service Bulletin MD11–24–161, dated April 10, 2000.

(8) For airplanes having manufacturer's fuselage numbers 0447 through 0449 inclusive, 0451 through 0464 inclusive, 0466 through 0489 inclusive, 0491 through 0517 inclusive, 0519 through 0552 inclusive, 0554 through 0556 inclusive, 0557, 0558 through 0633 inclusive: Perform a one-time detailed visual inspection to detect discrepancies of all electrical wiring installations in the main avionics compartment from stations Y=275.000 to Y=464.000, in accordance with the paragraph 3.B., ''Work Instructions,'' of the Accomplishment Instructions of McDonnell Douglas Service Bulletin MD11–24–162, dated April 10, 2000.

Corrective Action

(b) If any discrepancy is detected during the inspection required by paragraph (a)(1), (a)(2), (a)(3), (a)(4), (a)(5), (a)(6), (a)(7), or (a)(8) of this AD, before further flight, accomplish the applicable corrective action(s) in accordance with the Accomplishment Instructions of the following applicable service bulletins, except as provided in paragraphs (c) and (d) of this AD, as applicable:

(1) McDonnell Douglas Service Bulletin MD11–24–171, dated April 4, 2000;

(2) McDonnell Douglas Service Bulletin MD11–24–170, dated April 12, 2000;

(3) McDonnell Douglas Service Bulletin MD11–24–167, dated April 4, 2000;

(4) McDonnell Douglas Service Bulletin MD11–24–165, dated April 4, 2000;

(5) McDonnell Douglas Service Bulletin MD11–24–163, dated April 4, 2000;

(6) McDonnell Douglas Service Bulletin MD11–24–188, dated April 28, 2000;

(7) McDonnell Douglas Service Bulletin MD11–24–161, dated April 10, 2000; or

(8) McDonnell Douglas Service Bulletin MD11–24–162, dated April 10, 2000.

Note 4: Where there are differences between the AD and the referenced service bulletins, the AD prevails.

(c) If no gap between the wire bundle and blanket can be seen when pressure is applied to the blanket, before further flight, reposition wires or clamps so that a gap can been seen when pressure is applied to the blanket.

(d) If any screw terminal of the flag lug bus bar is loose, before further flight, retorque to 10 to 11 inch-pounds.

Alternative Methods of Compliance

(e) An alternative method of compliance or adjustment of the compliance time that provides an acceptable level of safety may be used if approved by the Manager, Los Angeles Aircraft Certification Office (ACO), FAA, Transport Airplane Directorate. Operators shall submit their requests through an appropriate FAA Principal Maintenance Inspector, who may add comments and then send it to the Manager, Los Angeles ACO.

Note 5: Information concerning the existence of approved alternative methods of

compliance with this AD, if any, may be obtained from the Los Angeles ACO.

Special Flight Permit

(f) Special flight permits may be issued in accordance with sections 21.197 and 21.199 of the Federal Aviation Regulations (14 CFR 21.197 and 21.199) to operate the airplane to a location where the requirements of this AD can be accomplished.

Issued in Renton, Washington, on July 14, 2000.

John J. Hickey,

Manager, Transport Airplane Directorate, Aircraft Certification Service.

[FR Doc. 00–18400 Filed 7–26–00; 8:45 am]

BILLING CODE 4910–13–U

DEPARTMENT OF TRANSPORTATION

Federal Aviation Administration

14 CFR Part 39

[Docket No. 2000–NM–37–AD]

RIN 2120–AA64

Airworthiness Directives; McDonnell Douglas Model MD–11 Series Airplanes

AGENCY: Federal Aviation Administration, DOT.

ACTION: Notice of proposed rulemaking (NPRM).

SUMMARY: This document proposes the adoption of a new airworthiness directive (AD) that is applicable to certain McDonnell Douglas Model MD–11 series airplanes. This proposal would require an inspection of the one phase remote control circuit breaker (RCCB) in the main avionics compartment and center accessory compartment to determine its part number and serial number, and replacement of the RCCB with a certain RCCB, if necessary. This action is necessary to ensure that defective braze joints of certain latch assemblies of the RCCB are not installed on the airplane. Defective braze joints could fail and prevent the RCCB from tripping during an overload condition, which could result in fire and smoke in certain wire bundles that are routed to and from the main avionics compartment or center accessory compartment. This action is intended to address the identified unsafe condition.

DATES: Comments must be received by September 11, 2000.

ADDRESSES: Submit comments in triplicate to the Federal Aviation Administration (FAA), Transport Airplane Directorate, ANM–114, Attention: Rules Docket No. 2000–NM–37–AD, 1601 Lind Avenue, SW., Renton, Washington 98055–4056. Comments may be inspected at this location between 9 a.m. and 3 p.m., Monday through Friday, except Federal holidays. Comments may be submitted via fax to (425) 227–1232. Comments may also be sent via the Internet using the following address: 9-anm-nprmcomment@faa.gov. Comments sent via fax or the Internet must contain ''Docket No. 2000–NM–37–AD'' in the subject line and need not be submitted in triplicate. Comments sent via the Internet as attached electronic files must be formatted in Microsoft Word 97 for Windows or ASCII text.

The service information referenced in the proposed rule may be obtained from Boeing Commercial Aircraft Group, Long Beach Division, 3855 Lakewood Boulevard, Long Beach, California 90846, Attention: Technical Publications Business Administration, Dept. C1–L51 (2–60). This information may be examined at the FAA, Transport Airplane Directorate, 1601 Lind Avenue, SW., Renton, Washington; or at the FAA, Transport Airplane Directorate, Los Angeles Aircraft Certification Office, 3960 Paramount Boulevard, Lakewood, California.

FOR FURTHER INFORMATION CONTACT: Brett Portwood, Aerospace Engineer, Systems and Equipment Branch, ANM–130L, FAA, Transport Airplane Directorate, Los Angeles Aircraft Certification Office, 3960 Paramount Boulevard, Lakewood, California 90712–4137; telephone (562) 627–5350; fax (562) 627–5210.

SUPPLEMENTARY INFORMATION:

Comments Invited

Interested persons are invited to participate in the making of the proposed rule by submitting such written data, views, or arguments as they may desire. Communications shall identify the Rules Docket number and be submitted in triplicate to the address specified above. All communications received on or before the closing date for comments, specified above, will be considered before taking action on the proposed rule. The proposals contained in this notice may be changed in light of the comments received.

Submit comments using the following format:

- Organize comments issue-by-issue. For example, discuss a request to change the compliance time and a request to change the service bulletin reference as two separate issues.
- For each issue, state what specific change to the proposed AD is being requested.
- Include justification (*e.g.*, reasons or data) for each request.

Comments are specifically invited on the overall regulatory, economic, environmental, and energy aspects of the proposed rule. All comments submitted will be available, both before and after the closing date for comments, in the Rules Docket for examination by interested persons. A report summarizing each FAA-public contact concerned with the substance of this proposal will be filed in the Rules Docket.

Commenters wishing the FAA to acknowledge receipt of their comments submitted in response to this notice must submit a self-addressed, stamped postcard on which the following statement is made: ''Comments to Docket Number 2000–NM–37–AD.'' The postcard will be date stamped and returned to the commenter.

Availability of NPRMs

Any person may obtain a copy of this NPRM by submitting a request to the FAA, Transport Airplane Directorate, ANM–114, Attention: Rules Docket No. 2000–NM–37–AD, 1601 Lind Avenue, SW., Renton, Washington 98055–4056.

Discussion

As part of its practice of re-examining all aspects of the service experience of a particular aircraft whenever an accident occurs, the FAA has been informed by the airplane manufacturer that certain latch assemblies of the one phase remote control circuit breakers (RCCB) were manufactured with defective braze joints. These defective braze joints are installed on certain McDonnell Douglas Model MD–11 series airplanes. The defective braze joints that are located between the bimetal assembly and the latch are limited to two lots with specific part numbers and serial numbers. Defective braze joints, if not corrected, could fail and prevent the RCCB from tripping during an overload condition, which could result in a fire and smoke in certain wire bundles that are routed to and from the main avionics compartment or center accessory compartment.

This finding is not considered to be related to an accident that occurred off the coast of Nova Scotia involving a McDonnell Douglas Model MD–11 series airplane. The cause of that accident is still under investigation.

Other Related Rulemaking

The FAA, in conjunction with Boeing and operators of Model MD–11 series airplanes, is continuing to review all aspects of the service history of those airplanes to identify potential unsafe conditions and to take appropriate

corrective actions. This airworthiness directive (AD) is one of a series of actions identified during that process. The process is continuing and the FAA may consider additional rulemaking actions as further results of the review become available.

Explanation of Relevant Service Information

The FAA has reviewed and approved Boeing Alert Service Bulletin MD11–24A144, dated May 2, 2000. The service bulletin describes procedures for a one-time general visual inspection of the one phase RCCB in the main avionics compartment and center accessory compartment to determine its part number and serial number, and replacement of the RCCB with an RCCB having the same part number with a certain serial number, if necesary. Accomplishment of the actions specified in the service bulletin is intended to adequately address the identified unsafe condition.

Explanation of Requirements of Proposed Rule

Since an unsafe condition has been identified that is likely to exist or develop on other products of this same type design, the proposed AD would require accomplishment of the actions specified in the service bulletin described previously.

Cost Impact

There are approximately 187 Model MD–11 series airplanes of the affected design in the worldwide fleet. The FAA estimates that 60 airplanes of U.S. registry would be affected by this proposed AD, that it would take approximately 6 work hours per airplane to accomplish the proposed inspection, and that the average labor rate is $60 per work hour. Based on these figures, the cost impact of the inspection proposed by this AD on U.S. operators is estimated to be $21,600, or $360 per airplane.

The cost impact figure discussed above is based on assumptions that no operator has yet accomplished any of the proposed requirements of this AD action, and that no operator would accomplish those actions in the future if this proposed AD were not adopted. The cost impact figures discussed in AD rulemaking actions represent only the time necessary to perform the specific actions actually required by the AD. These figures typically do not include incidental costs, such as the time required to gain access and close up, planning time, or time necessitated by other administrative actions.

Regulatory Impact

The regulations proposed herein would not have a substantial direct effect on the States, on the relationship between the national Government and the States, or on the distribution of power and responsibilities among the various levels of government. Therefore, it is determined that this proposal would not have federalism implications under Executive Order 13132.

For the reasons discussed above, I certify that this proposed regulation (1) Is not a ''significant regulatory action'' under Executive Order 12866; (2) is not a ''significant rule'' under the DOT Regulatory Policies and Procedures (44 FR 11034, February 26, 1979); and (3) if promulgated, will not have a significant economic impact, positive or negative, on a substantial number of small entities under the criteria of the Regulatory Flexibility Act. A copy of the draft regulatory evaluation prepared for this action is contained in the Rules Docket. A copy of it may be obtained by contacting the Rules Docket at the location provided under the caption **ADDRESSES.**

List of Subjects in 14 CFR Part 39

Air transportation, Aircraft, Aviation safety, Safety.

The Proposed Amendment

Accordingly, pursuant to the authority delegated to me by the Administrator, the Federal Aviation Administration proposes to amend part 39 of the Federal Aviation Regulations (14 CFR part 39) as follows:

PART 39—AIRWORTHINESS DIRECTIVES

1. The authority citation for part 39 continues to read as follows:

Authority: 49 U.S.C. 106(g), 40113, 44701.

§ 39.13 [Amended]

2. Section 39.13 is amended by adding the following new airworthiness directive:

McDonnell Douglas: Docket 2000–NM–37–AD.

Applicability: Model MD–11 series airplanes, as listed in Boeing Alert Service Bulletin MD11–24A144, dated May 2, 2000; certificated in any category.

Note 1: This AD applies to each airplane identified in the preceding applicability provision, regardless of whether it has been modified, altered, or repaired in the area subject to the requirements of this AD. For airplanes that have been modified, altered, or repaired so that the performance of the requirements of this AD is affected, the owner/operator must request approval for an alternative method of compliance in accordance with paragraph (c) of this AD. The request should include an assessment of the effect of the modification, alteration, or repair on the unsafe condition addressed by this AD; and, if the unsafe condition has not been eliminated, the request should include specific proposed actions to address it.

Compliance: Required as indicated, unless accomplished previously.

To prevent fire and smoke in certain wire bundles that are routed to and from the main avionics compartment or center accessory compartment, accomplish the following:

(a) Within 6 months after the effective date of this AD, perform a one-time general visual inspection of the one phase remote control circuit breaker (RCCB) in the main avionics compartment and center accessory compartment to determine the part number and serial number (identified in Table 2 of the Accomplishment Instructions of the service bulletin), in accordance with Boeing Alert Service Bulletin MD11–24A144, dated May 2, 2000.

Note 2: For the purposes of this AD, a general visual inspection is defined as ''A visual examination of an interior or exterior area, installation, or assembly to detect obvious damage, failure, or irregularity. This level of inspection is made under normally available lighting conditions such as daylight, hangar lighting, flashlight, or drop-light, and may require removal or opening of access panels or doors. Stands, ladders, or platforms may be required to gain proximity to the area being checked.''

(1) If any RCCB has a part number listed in Table 2 of the Accomplishment Instructions of the service bulletin and the corresponding serial number is NOT identified in that table, no further action is required by this AD.

(2) If any RCCB has a part number listed in Table 2 of the Accomplishment Instructions of the service bulletin and the corresponding serial number is identified in that table, before further flight, replace the RCCB with a RCCB having the same part number with a serial number that is NOT identified in Table 2, in accordance with the service bulletin.

Alternative Methods of Compliance

(b) An alternative method of compliance or adjustment of the compliance time that provides an acceptable level of safety may be used if approved by the Manager, Los Angeles Aircraft Certification Office (ACO), FAA, Transport Airplane Directorate. Operators shall submit their requests through an appropriate FAA Principal Maintenance Inspector, who may add comments and then send it to the Manager, Los Angeles ACO.

Note 3: Information concerning the existence of approved alternative methods of compliance with this AD, if any, may be obtained from the Los Angeles ACO.

Special Flight Permit

(c) Special flight permits may be issued in accordance with sections 21.197 and 21.199 of the Federal Aviation Regulations (14 CFR 21.197 and 21.199) to operate the airplane to a location where the requirements of this AD can be accomplished.

Issued in Renton, Washington, on July 14, 2000.

John J. Hickey,

Manager, Transport Airplane Directorate, Aircraft Certification Service.

[FR Doc. 00–18401 Filed 7–26–00; 8:45 am]

BILLING CODE 4910–13–U

DEPARTMENT OF TRANSPORTATION

Federal Aviation Administration

14 CFR Part 39

[Docket No. 2000–NM–38–AD]

RIN 2120–AA64

Airworthiness Directives; McDonnell Douglas Model MD–11 Series Airplanes

AGENCY: Federal Aviation Administration, DOT.

ACTION: Notice of proposed rulemaking (NPRM).

SUMMARY: This document proposes the supersedure of an existing airworthiness directive (AD), applicable to certain McDonnell Douglas Model MD–11 series airplanes, that currently requires deactivation of the forward and center cargo control units (CCU). That AD was prompted by a report of failure of a CCU, which produced overheating of the electrical pins inside the CCU; the subsequent release of hot gases and flames ignited an adjacent insulation blanket. This action would require, among other actions, a general visual inspection to verify that all six external connectors of suspect CCU's have a certain part number stamped on the connector bodies on all CCU assemblies, and follow-on actions, which would constitute terminating action for the deactiviation requirements. The actions specified by the proposed AD are intended to prevent overheating of the electrical pins inside the CCU's and subsequent release of hot gases and flames, which could result in smoke and fire in the cargo compartment.

DATES: Comments must be received by September 11, 2000.

ADDRESSES: Submit comments in triplicate to the Federal Aviation Administration (FAA), Transport Airplane Directorate, ANM–114, Attention: Rules Docket

No. 2000–NM–38–AD, 1601 Lind Avenue, SW., Renton, Washington 98055–4056. Comments may be submitted via fax to (425) 227–1232. Comments may also be sent via the Internet using the following address: 9-anm-nprmcomment@faa.gov. Comments sent via fax or the Internet must contain ''Docket No. 2000–NM–38–AD'' in the subject line and need not be submitted in triplicate. Comments sent via the Internet as attached electronic files must be formatted in Microsoft Word 97 for Windows or ASCII text.

The service information referenced in the proposed rule may be obtained from Boeing Commercial Aircraft Group, Long Beach Division, 3855 Lakewood Boulevard, Long Beach, California 90846, Attention: Technical Publications Business Administration, Dept. C1–L51 (2–60). This information may be examined at the FAA, Transport Airplane Directorate, 1601 Lind Avenue, SW., Renton, Washington; or at the FAA, Transport Airplane Directorate, Los Angeles Aircraft Certification Office, 3960 Paramount Boulevard, Lakewood, California.

FOR FURTHER INFORMATION CONTACT: Brett Portwood, Aerospace Engineer, Systems and Equipment Branch, ANM–130L, FAA, Transport Airplane Directorate, Los Angeles Aircraft Certification Office, 3960 Paramount Boulevard, Lakewood, California 90712–4137; telephone (562) 627–5350; fax (562) 627–5210.

SUPPLEMENTARY INFORMATION:

Comments Invited

Interested persons are invited to participate in the making of the proposed rule by submitting such written data, views, or arguments as they may desire. Communications shall identify the Rules Docket number and be submitted in triplicate to the address specified above. All communications received on or before the closing date for comments, specified above, will be considered before taking action on the proposed rule. The proposals contained in this notice may be changed in light of the comments received.

Submit comments using the following format:

- Organize comments issue-by-issue. For example, discuss a request to change the compliance time and a request to change the service bulletin reference as two separate issues.
- For each issue, state what specific change to the proposed AD is being requested.
- Include justification (*e.g.,* reasons or data) for each request.

Comments are specifically invited on the overall regulatory, economic, environmental, and energy aspects of the proposed rule. All comments submitted will be available, both before and after the closing date for comments, in the Rules Docket for examination by interested persons. A report summarizing each FAA-public contact concerned with the substance of this proposal will be filed in the Rules Docket.

Commenters wishing the FAA to acknowledge receipt of their comments submitted in response to this notice must submit a self-addressed, stamped postcard on which the following statement is made: ''Comments to Docket Number 2000–NM–38–AD.'' The postcard will be date stamped and returned to the commenter.

Availability of NPRMs

Any person may obtain a copy of this NPRM by submitting a request to the FAA, Transport Airplane Directorate, ANM–114, Attention: Rules Docket No. 2000–NM–38–AD, 1601 Lind Avenue, SW., Renton, Washington 98055–4056.

Discussion

On April 12, 2000, the FAA issued AD 2000–08–03, amendment 39–11689 (65 FR 21134, April 20, 2000), applicable to certain McDonnell Douglas Model MD–11 series airplanes, to require deactivation of the forward and center cargo control units (CCU).

That action was prompted by a report of failure of a CCU, which produced overheating of the electrical pins inside the CCU; the subsequent release of hot gases and flames ignited an adjacent insulation blanket. The requirements of that AD are intended to prevent overheating of the electrical pins inside the CCU's and subsequent release of hot gases and flames, which could result in smoke and fire in the cargo compartment.

Actions Since Issuance of Previous Rule

In the preamble of AD 2000–08–03, the FAA indicated that the actions required by that AD were considered ''interim action'' and that further rulemaking was being considered to require modification of the CCU assembly, which would constitute terminating action for the requirements of AD 2000–08–03. The FAA now has determined that further rulemaking is indeed necessary, and this proposed AD follows from that determination.

Explanation of Relevant Service Information

The FAA has reviewed and approved Boeing Alert Service Bulletin MD11–25A253, dated March 10, 2000. The service bulletin describes procedures for a general visual inspection to verify that all six external connectors of the CCU's have a certain part number stamped on the connector bodies on all TRW Aeronautical Systems, Lucas Aerospace, CCU assemblies; and follow-on actions. The follow-on actions include:

Returning any discrepant connector to the manufacturer; modifying the rear cover (40) of the CCU assembly [including aligning the center hole of the insulator with the center hole on the rear cover (40); ensuring that the top edge of the insulator is parallel to the top edge of the rear cover]; and reidentifying the CCU; as applicable. Accomplishment of the actions specified in the service bulletin is intended to adequately address the identified unsafe condition.

Boeing Alert Service Bulletin MD11–25A253 references TRW Aeronautical Systems, Lucas Aerospace Alert Service Bulletin 462650–25–A01, dated March 10, 2000, as an additional source of service information to accomplish the inspection and follow-on actions described above.

Explanation of Requirements of Proposed Rule

Since an unsafe condition has been identified that is likely to exist or develop on other products of this same type design, the proposed AD would supersede AD 2000–08–03 to continue to require deactivation of the forward and center CCU's, until accomplishment of the actions specified in Boeing Alert Service Bulletin MD11–25A253 described previously. The proposed AD also would require an inspection to determine the part number of the CCU's, and accomplishment of the actions specified in the Boeing service bulletin described previously, if necessary, except as discussed below.

Differences Between the Proposed AD and Relevant Service Bulletin

Although Boeing Alert Service Bulletin MD11–25A253 recommends accomplishing the general visual inspection within 15 days (from issue date of the service bulletin), the FAA has determined that an interval of 90 days would address the identified unsafe condition in a timely manner. Because operators have already accomplished the interim requirements (*i.e.,* deactivation of the discrepant CCU's) of AD 2000–08–03 (which includes the requirements of AD 2000–05–01), the FAA finds that the safety risk of the affected airplanes has been reduced. Therefore, the FAA has determined that a 90-day compliance time for initiating the required inspection to be warranted, in that it represents an appropriate interval of time allowable for affected airplanes to continue to operate without compromising safety.

Boeing Alert Service Bulletin MD11–25A253 (which, as described previously, references TRW Aeronautical Systems, Lucas Aerospace Alert Service Bulletin 462650–25–A01 as an additional source of service information) recommends that certain discrepant CCU's be returned to the manufacturer; however, it does not describe any further procedures to correct the discrepancy. Therefore, this proposed AD requires replacement of the discrepant CCU with a CCU that has one of the following part numbers (P/N): 462650–21, 462650–22, or 462650–23.

Since the issuance of Boeing Alert Service Bulletin MD11–25A253, Lucas has incorporated a design change to the CCU's. Lucas incorporated this design change in CCU's having P/N 462650–21, 462650–22, and 462650–23. The FAA finds that these CCU's are not subject to the identified unsafe condition of this AD. Therefore, in addition to the procedures in the referenced service bulletin, this proposed AD would require a general visual inspection to determine the part number of the CCU's. Depending on the inspection results, the proposed AD would then require a general visual inspection to verify that all six external connectors of the suspect CCU have a certain part number stamped on the connector bodies on all CCU assemblies, as described in the referenced service bulletin, and follow-on actions.

Cost Impact

There are approximately 104 Model MD–11 series airplanes of the affected design in the worldwide fleet. The FAA estimates that 20 airplanes of U.S. registry would be affected by this proposed AD.

The actions that are currently required by AD 2000–08–03 take approximately 1 work hour per airplane to accomplish, at an average labor rate of $60 per work hour. Based on these figures, the cost impact of the currently required actions on U.S. operators is estimated to be $1,200, or $60 per airplane.

The new inspection that is proposed in this AD action would take approximately 1 work hour per airplane to accomplish, at an average labor rate of $60 per work hour. Based on these figures, the cost impact of the inspection proposed by this AD on U.S. operators is estimated to be $1,200, or $60 per airplane.

Should an operator be required to accomplish the new modification that is proposed in this AD action, it would take approximately 1 work hour per airplane to accomplish, at an average labor rate of $60 per work hour. Required parts would be supplied by the manufacturer of the CCU at no cost to the operators. Based on these figures, the cost impact of the modification proposed by this AD on U.S. operators is estimated to be $60 per airplane.

Should an operator be required to accomplish the new replacement that is proposed in this AD action, it would take approximately 1 work hour per airplane to accomplish, at an average labor rate of $60 per work hour. Required parts would be supplied by the manufacturer of the CCU at no cost to the operators. Based on these figures, the cost impact of the replacement proposed by this AD on U.S. operators is estimated to be $60 per airplane.

The cost impact figures discussed above are based on assumptions that no operator has yet accomplished any of the current or proposed requirements of this AD action, and that no operator would accomplish those actions in the future if this AD were not adopted.

Regulatory Impact

The regulations proposed herein would not have a substantial direct effect on the States, on the relationship between the national Government and the States, or on the distribution of power and responsibilities among the various levels of government. Therefore, it is determined that this proposal would not have federalism implications under Executive Order 13132.

For the reasons discussed above, I certify that this proposed regulation (1) is not a ''significant regulatory action'' under Executive Order 12866; (2) is not a ''significant rule'' under the DOT Regulatory Policies and Procedures (44 FR 11034, February 26, 1979); and (3) if promulgated, will not have a significant economic impact, positive or negative, on a substantial number of small entities under the criteria of the Regulatory Flexibility Act. A copy of the draft regulatory evaluation prepared for this action is contained in the Rules Docket. A copy of it may be obtained by contacting the Rules Docket at the location provided under the caption **ADDRESSES.**

List of Subjects in 14 CFR Part 39

Air transportation, Aircraft, Aviation safety, Safety.

The Proposed Amendment

Accordingly, pursuant to the authority delegated to me by the Administrator, the Federal Aviation Administration proposes to amend part 39 of the Federal Aviation Regulations (14 CFR part 39) as follows:

PART 39—AIRWORTHINESS DIRECTIVES

1. The authority citation for part 39 continues to read as follows:

Authority: 49 U.S.C. 106(g), 40113, 44701.

§ 39.13 [Amended]

2. Section 39.13 is amended by removing amendment 39–11689 (65 FR 21134, April 20, 2000), and by adding a new airworthiness directive (AD), to read as follows:

McDonnell Doulgas: Docket 2000–NM–38–AD. Supersedes AD 2000–08–03, Amendment 39–11689.

Applicability: Model MD–11 series airplanes, certificated in any category, having the serial numbers listed below.

Group 1 Airplane

48565	48566	48533	48549	48470	48406
48504	48602	48603	48571	48439	48605
48572	48471	48573	48600	48601	48633
48513	48574	48575	48542	48543	48576
48415	48631	48544	48632	48577	48545
48578	48546	48743	48744	48747	48748
48745	48746	48749	48579	48766	48768
48767	48769	48754	48623	48770	48753
48773	48774	48755	48758	48775–48779 (inclusive)	
48624	48756	48780	48532		

Group 2 Airplane

48555	48556	48581	48630	48557	48539
48558	48559	48616	48560	48617	48618
48561	48629	48562	48563	48757	48540
48564	48634	48541	48798	48781–48792 (inclusive)	
48794	48799	48801	48800	48802–48806 (inclusive)	

Note 1: This AD applies to each airplane identified in the preceding applicability provision, regardless of whether it has been modified, altered, or repaired in the area subject to the requirements of this AD. For airplanes that have been modified, altered, or repaired so that the performance of the requirements of this AD is affected, the owner/operator must request approval for an alternative method of compliance in accordance with paragraph (f) of this AD. The request should include an assessment of the effect of the modification, alteration, or repair on the unsafe condition addressed by this AD; and, if the unsafe condition has not been eliminated, the request should include specific proposed actions to address it.

Compliance: Required as indicated, unless accomplished previously.

To prevent overheating of the electrical pins inside the cargo control units (CCU) and subsequent release of hot gases and flames, which could result in smoke and fire in the cargo compartment, accomplish the following:

Restatement of Requirements of AD 2000–05–01: Deactivation

(a) For Group 1 airplanes having serial numbers other than that identified in paragraph (c) of this AD: Within 15 days after March 20, 2000 (the effective date of AD 2000–05–01, amendment 39–11610), deactivate the forward and center CCU's in accordance with the following procedures:

(1) Remove the access panel to the forward cargo compartment CCU circuit breaker panel located at fuselage station 1009.300 (right side looking aft). Pull and collar the following circuit breakers:

B1–506	B1–489	B1–488	B1–487	B1–486
B1–485	B1–480	B1–481	B1–498	B1–482
B1–500	B1–495	B1–499	B1–490	

(2) Remove the access panel to the center cargo compartment CCU circuit breaker panel located at fuselage station 1701.000 (right side looking aft). Pull and collar the following circuit breakers:

B1–552	B1–762	B1–761	B1–760	B1–759
B1–758	B1–518	B1–519	B1–751	B1–520
B1–753	B1–764	B1–752	B1–763	

(b) For Group 2 airplanes having serial numbers other than that identified in paragraph (c) of this AD: Within 15 days after March 20, 2000, deactivate the forward and center CCU's in accordance with the following procedures:

(1) Remove the access panel to the forward cargo compartment CCU circuit breaker panel located at fuselage station 1009.300 (right side looking aft). Pull and collar the following circuit breakers:

B1–506	B1–489	B1–488	B1–487	B1–486
B1–485	B1–480	B1–481	B1–498	B1–482
B1–500	B1–495	B1–499	B1–490	

(2) Remove the access panel to the center cargo compartment CCU circuit breaker panel located at fuselage station 1701.000 (right side looking aft). Pull and collar the following circuit breakers:

B1–552	B1–762	B1–761	B1–760	B1–759
B1–758	B1–518	B1–519	B1–751	B1–520
B1–753	B1–764	B1–752		

Restatement of Requirements of AD 2000–08–03: Deactivation

(c) For Group 1 airplane, serial number 48769, and for Group 2 airplane, serial number 48563: Within 15 days after May 5, 2000 (the effective date of AD 2000–08–03, amendment 39–11689), accomplish the actions specified in either paragraph (a) or (b) of this AD, as applicable.

New Requirements of This AD: Inspection and Modification/Reidentification, If Necessary

(d) For Group 1 and Group 2 airplanes: Within 90 days after the effective date of this AD, perform an inspection to determine the part number of the CCU's.

(1) If both CCU's have part number (P/N) 462650–21, 462650–22, or 462650–23, the deactivation specified in paragraphs (a), (b), and (c) of this AD is no longer required, and the CCU's may be reactivated.

(2) If any CCU has a part number (P/N) other than 462650–21, 462650–22, or 462650–23, within 90 days after the effective date of this AD, perform a general visual inspection to verify that all six external connectors of the CCU have P/N M83723/71XXXXXX or P/N M83723/72XXXXXX stamped on the connector bodies on all TRW Aeronautical Systems, Lucas Aerospace, CCU assemblies, in accordance with Boeing Alert Service Bulletin MD11–25A253, dated March 10, 2000.

Note 2: McDonnell Douglas Service Bulletin MD11–25A253, dated March 10, 2000, references TRW Aeronautical Systems, Lucas Aerospace Alert Service Bulletin 462650–25–A01, dated March 10, 2000, as an additional source of service information to accomplish the inspection described above and corrective actions described below.

(i) If any connector has a P/N other than M83723/71XXXXXX or M83723/72XXXXXX, prior to further flight, replace the CCU with a spare CCU from the operator's stock that has one of the following P/N: 462650–21, 462650–22, or 462650–23. Following accomplishment of the replacement, the deactivation specified in paragraphs (a), (b), and (c) of this AD is no longer required, and the CCU's may be reactivated.

(ii) If any connector has P/N M83723/71XXXXXX or P/N M83723/72XXXXXX, prior to further flight, modify the rear cover (40) of the CCU assembly [including aligning the center hole of the insulator with the center hole on the rear cover (40), and ensuring that the top edge of the insulator is parallel to the top edge of the rear cover), and reidentify the CCU, in accordance with the service bulletin. Following accomplishment of the modification, the deactivation specified in paragraphs (a), (b), and (c) of this AD is no longer required, and the CCU's may be reactivated.

Spares

(e) As of the effective date of this AD, no person shall install on any airplane any part (identified under ''Key Word''), having a ''Spare Part No.'' listed in paragraph 2.D., ''Parts Necessary to Change Spares,'' of Boeing Alert Service Bulletin MD11–25A253, dated March 10, 2000.

Alternative Methods of Compliance

(f) An alternative method of compliance or adjustment of the compliance time that provides an acceptable level of safety may be used if approved by the Manager, Los Angeles Aircraft Certification Office (ACO), FAA, Transport Airplane Directorate. Operators shall submit their requests through an appropriate FAA Principal Maintenance Inspector, who may add comments and then send it to the Manager, Los Angeles ACO.

Note 3: Information concerning the existence of approved alternative methods of compliance with this AD, if any, may be obtained from the Los Angeles ACO.

Special Flight Permits

(g) Special flight permits may be issued in accordance with sections 21.197 and 21.199 of the Federal Aviation Regulations (14 CFR 21.197 and 21.199) to operate the airplane to a location where the requirements of this AD can be accomplished.

Issued in Renton, Washington, on July 14, 2000.

John J. Hickey,

Manager, Transport Airplane Directorate, Aircraft Certification Service.

[FR Doc. 00–18402 Filed 7–26–00; 8:45 am]

BILLING CODE 4910–13–U

Federal Register

Thursday,
July 27, 2000

Part III

Department of Transportation

National Highway Traffic Safety Administration
49 CFR Part 571

Federal Motor Vehicle Safety Standards; Platform Lift Systems for Accessible Motor Vehicles and Platform Lift Installations on Motor Vehicles; Proposed Rule

DEPARTMENT OF TRANSPORTATION

National Highway Traffic Safety Administration

49 CFR Part 571

[Docket No. NHTSA–98–4511; Notice 1]

RIN 2127–AD50

Federal Motor Vehicle Safety Standards; Platform Lift Systems for Accessible Motor Vehicles Platform Lift Installations on Motor Vehicles

AGENCY: National Highway Traffic Safety Administration (NHTSA), Department of Transportation.

ACTION: Supplemental notice of proposed rulemaking (SNPRM).

SUMMARY: This document is a supplemental notice proposing to establish two new safety standards: an equipment standard specifying requirements for platform lifts; and a vehicle standard for all vehicles equipped with such lifts.

This SNPRM significantly differs from our original proposal in several respects. Most notably, the scope of our proposal has been expanded to platform lifts installed on all motor vehicles. Other significant changes are additional interlock requirements, improved wheelchair retention and platform slip resistance tests, and, in some instances, lesser compliance standards for lifts installed on vehicles typically used solely for private transport.

The proposed equipment standard would require platform lift manufacturers to ensure that their lifts meet minimum platform dimensions and size limits on platform protrusions and gaps between the platform and either the vehicle floor or the ground. The standard would also require handrails, a threshold warning signal, and retaining barriers for lifts. Performance tests would be specified for wheelchair retention on the platform, lift strength, and platform slip resistance. A set of interlocks is proposed to prevent accidental movement of a lift and the vehicle on which the lift is installed.

The proposed vehicle standard would require vehicle manufacturers who install lifts to use lifts meeting the equipment standard, to install them in accordance with the lift manufacturer's instructions, and to ensure that specific information is made available to lift users.

The purpose of the two standards is to prevent injuries and fatalities during lift operation and to promote the uniformity of Federal standards and guidelines for platform lifts. We have drafted both with the intent of protecting lift users aided by canes or walkers as well as lift users seated in wheelchairs.

DATES: You should submit your comments early enough to ensure that Docket Management receives them not later than October 25, 2000.

ADDRESS: You should mention the docket number of this document in your comments and submit your comments in writing to: Docket Management, Room PL–401, 400 Seventh Street, SW., Washington, DC 20590.

You may call the Docket at 202–366–9324. You may visit the Docket from 10 a.m. to 5 p.m., Monday through Friday.

FOR FURTHER INFORMATION CONTACT: For non-legal issues, you may call Louis Molino, Office of Crashworthiness Standards, at 202–366–1833.

For legal issues, you may call Rebecca MacPherson, Office of the Chief Counsel, at 202–366–2992.

You may send mail to both of these officials at National Highway Traffic Safety Administration, 400 Seventh St., SW., Washington, DC 20590.

SUPPLEMENTARY INFORMATION:

I. Executive Summary
II. Background
III. Notice of Proposed Rulemaking
IV. Comments to the NPRM
V. Supplemental Notice of Proposed Rulemaking (SNPRM)
A. Overview
B. Need for Federal Motor Vehicle Safety Standards
C. Harmonization with Governmental and Industry Standards
D. Applicability and Effective Date
E. Different Requirements for Platform Lifts Designed for Installation on Vehicles Other than Buses and Large MPVs
F. Proposed Platform Lift Requirements
1. Threshold Warning Signal
2. Platform Lift Operational Requirements
a. Maximum Platform Velocity
b. Maximum Platform Acceleration
c. Maximum Noise Level
3. Platform Requirements
a. Unobstructed Platform Operating Volume
b. Platform Surface Protrusions
c. Gaps, Transitions and Openings
d. Platform Deflection
e. Edge Guards
f. Wheelchair Retention
g. Inner Roll Stop
h. Handrails
i. Platform Markings
j. Platform Lighting
k. Platform Slip Resistance
l. Platform Free Fall Limits
m. Control Systems
n. Jacking Prevention
o. Backup Operation
p. Interlocks
q. Owner's Manual Insert
r. Installation Instruction Insert
4. Test Conditions and Procedures
a. Test Pallet and Load
b. Static Load Test I—Working Load
c. Static Load Test II—Proof Load
d. Static Load Test III—Ultimate Load
G. Additional Platform Lift Requirements Under Consideration
1. Environmental Resistance
2. Fatigue Endurance
3. Operations Counter
H. Proposed Vehicle Requirements
1. Installation Requirements
2. Owner's Manual Insert Requirements
3. Control System
VI. Rulemaking Analyses and Notices
VII. Comments

I. Executive Summary

We initiated this rulemaking proceeding concerning safety standards for platform lifts to provide practicable performance-based requirements and compliance procedures for the regulations promulgated by the Department of Transportation (DOT) under the Americans with Disabilities Act of 1990 [1] (ADA) and to ensure the safety of vehicles equipped with those lift systems. Under our statutory authority, [2] we establish Federal motor vehicle safety standards (FMVSS) to reduce motor vehicle crashes and the resulting deaths, injuries, and economic losses. Each standard must be practicable, meet the need for motor vehicle safety, and be stated in objective terms.[3] Our authority extends to both motor vehicles and motor vehicle equipment. Further, we are authorized to regulate non-operational vehicle safety (*i.e.,* safety while being maintained, serviced or repaired or while being entered or exited) as well as operational vehicle safety (*i.e.,* safety while being operated on public roads).

We recognize that the vast majority of the American public does not need to use platform lifts. We believe, however, that individuals who need to use lifts need to be assured that lifts are as safe as possible and need to be protected from the risk associated with using unregulated equipment. For example, we know that from 1991 to 1995, at least 299,734 wheelchair users were injured. 7,121 of these users were injured as a result of some interaction with a motor vehicle. In 1990 the Centers for Disease Control determined that 1.411 million people in the United States use wheelchairs. Thus the figure of 299,734 represents an overall injury rate among the wheelchair-using population of

[1] Pub. L. 101–336, 42 U.S.C. sections 12101, *et seq.*

[2] Formerly the National Traffic and Motor Vehicle Safety Act, currently codified as 49 USC sections 30101 *et seq.*

[3] 49 USC section 30111.

[4] [Reserved]

slightly more than 21 percent. While only 7,121 of these people were injured as a result of interaction with a motor vehicle, approximately 40% of all those injuries (2,808) occurred while the individual was entering or exiting the vehicle, and 26% (1,366) were the direct result of a lift malfunction.

We also believe that the potential for lift-associated injuries will increase with time. NHTSA anticipates that more people will use motor vehicles equipped with lifts as the ADA requirements make transportation more accessible to individuals with mobility impairments and as the proportion of older people in the general population increases. As the number of lift-equipped vehicles increases, the number of lift-related injuries is also likely to go up. Indeed, our analysis has already revealed an upward trend in the number of lift-related injuries.

Issuing motor vehicle safety standards provides the best way to ensure that only lift systems that comply with objective safety requirements are placed in service. The proposed standards would ensure a level of safety and uniformity that would instill confidence in the user population.

Additionally, our regulatory framework provides specific procedures to address quickly vehicles and motor vehicle equipment that are out of compliance or contain a safety defect, including a procedure that can be followed to remedy the situation if a problem is found.

The costs associated with this proposal are relatively low because we anticipate that most lift manufacturers are already complying with the existing voluntary and Federal standards. Accordingly, lift manufacturers generally will not need to make substantial changes to their existing lifts, although some work may be needed to fully comply with the lift standard. A chart detailing which voluntary and Federal standards correspond to each of the requirements proposed in this document can be found at the end of this section.

The proposed vehicle standard would impose no additional upgrade costs on the vehicle manufacturers, although operational testing may impose some additional costs. NHTSA anticipates that those tests would be relatively simple (*e.g.,* does the threshold warning work, is there an excessive gap between the lift and the vehicle) and, therefore, a nominal additional cost. Accordingly, for the ultimate consumer, the increase in cost of lift systems currently in use and the proposed systems would be approximately $268 for smaller vehicles and $280 for larger vehicles.

We are proposing requirements for lifts designed for installation on buses and multipurpose vehicles (MPVs) with a gross vehicle weight rating (GVWR) greater than 3,220 kg (7,100 lbs) which are, in some cases, more stringent than those for lifts designed for other vehicles. We believe that this is appropriate given that most of these vehicles are for public transit and paratransit use rather than for individual use and will generally be used by a larger and more varied population and will have much different pattern of use.

We believe the proposed platform lift standard will be of benefit to lift manufacturers, as well as consumers. The proposed standard was drafted to include or exceed all existing government (FTA, ADA) and voluntary industry (*e.g.,* SAE) standards. A lift manufacturer who certifies its lift to the proposed standard could have confidence that the lift would also meet other major U.S. standards currently in force without additional testing. The table below shows the source of each requirement in the proposed FMVSS No. 141. The reader should note that only five requirements were added by NHTSA that do not already exist in other standards. Of these five, four are based on a comment to the NPRM by a service transportation provider.

SUMMARY OF REQUIREMENTS IN PROPOSED FMVSS 141, ''PLATFORM LIFTS FOR ACCESSIBLE MOTOR VEHICLES'' AND THEIR ANTECEDENTS

Requirement	Based on[1]
Threshold warning signal	SAE.
Max. platform velocity	ADA, FTA.
Max. platform acceleration	FTA, ADA, SAE.
Max. noise level	FTA.
Unobstructed platform operating volume	ADA.
Platform surface protrusions	FTA, ADA.
Gaps, transitions and openings	FTA, ADA, SAE.
Platform deflection	FTA, ADA, SAE.
Edge guards	FTA, ADA, SAE.
Wheelchair retention:	
Dynamic	ADA.
Static	FTA, SAE.
Inner roll stop	FTA, ADA.
Handrails	ADA, SAE.
Platform markings	FTA.
Platform lighting	FTA, ADA.
Platform slip resistance	FTA, ADA.
Platform free fall limits	ADA.
Control systems	FTA, ADA.
Jacking prevention	FTA, SAE.
Backup operation	FTA, ADA, SAE.
Interlocks:	
Original NPRM 5	FTA, ADA.
2 new ones	Comment to NPRM by service provider.
Another 2 new ones	Logical extension of the comment.
Crushing prevention	SAE.
Owner's manual insert	New.
Installation instruction insert	SAE.
Static Load Test I:	
Working load—lift must operate normally with 600 pound load	FTA, ADA, SAE.

SUMMARY OF REQUIREMENTS IN PROPOSED FMVSS 141, ''PLATFORM LIFTS FOR ACCESSIBLE MOTOR VEHICLES'' AND THEIR ANTECEDENTS—Continued

Requirement	Based on[1]
Static Load Test II:	
Proof load—lift must sustain a load of 1800 lbs and operate normally after the load is removed. Safety Factor = 3.	FTA.
Static Load Test III:	
Ultimate load—lift must sustain a load of 2400 lbs without failure, but does not need to operate after removal. SF=4.	ADA, SAE.
Environmental resistance for externally mounted lifts	SAE (based on FMVSS 209).
Fatigue endurance	FTA, SAE.
Operations counter	FTA (optional).

[1] ''Based on'' means that the standard or regulation shown in this column incorporated a requirement for the named area of lift operation. The proposed NHTSA requirement may, or may not be, identical to the requirement in the antecedent standard.

ADA = 49 CFR part 38, Regulations promulgated by DOT to implement the transportation accessibility requirements of the Americans with Disabilities Act, pursuant to guidelines issued by the Architectural and Transportation Barriers Compliance Board.

FTA = Federal Transit Administration Guideline Specifications for Passive and Active Lifts, procurement guidelines.

SAE = Society of Automotive Engineers J2309, ''Design Considerations for Wheelchair Lifts for Entry to or Exit from a Personally Licensed Vehicle,'' an industry consensus voluntary standard, which itself is based primarily on the Department of Veterans' Affairs procurement requirements. The DVA now uses the SAE standard as an alternative to its procurement standard.

II. Background

The ADA sweepingly endorsed the rights of persons with disabilities. The ADA created specific affirmative obligations on private entities who conduct business with the general public. Among these obligations is the requirement that transit and paratransit operators accommodate the needs of individuals with disabilities who wish to use the their services.

Title II of the ADA requires newly purchased, leased, or remanufactured vehicles purchased by public entities, like municipalities and regional transit authorities, and used in fixed route bus systems to be readily accessible to and usable by individuals with disabilities, including individuals who use wheelchairs, canes, and walkers. Title II also requires a public entity operating a demand-responsive transportation system to obtain accessible vehicles unless the system, when viewed in its entirety, provides individuals with disabilities with a level of service equivalent to that provided for individuals without disabilities. Title II further requires public entities operating a fixed route bus system (other than a bus system which provides only commuter service) to provide complementary paratransit and other special transportation services to individuals with disabilities. Title III requires that designated public transportation, provided by private entities, be readily accessible to and usable by individuals with disabilities, including individuals who use wheelchairs, canes, or walkers.

The ADA directed DOT to issue regulations to implement the transportation vehicle provisions in Titles II and III. Additionally, the ADA requires the Architectural and Transportation Barriers Compliance Board (ATBCB) to issue guidelines to assist DOT in establishing these regulations.[5] On September 6, 1991, ATBCB published its final guidelines which specify that to be considered accessible, a vehicle must be equipped with a lift or other level change mechanism and have sufficient clearance to permit a wheelchair to reach a wheelchair securement location once it is on the vehicle. (56 FR 45530) ATBCB stated that ''NHTSA is the appropriate agency to define safety tests'' for platform lifts.[6] On the same day, DOT implemented the ADA by publishing a final rule establishing accessibility regulations at 49 CFR part 38, *Transportation for Individuals with Disabilities, Subpart B—Buses, Vans and Systems,* and by incorporating and requiring compliance with the September 6, 1991 guidelines issued by the ATBCB. (56 FR 45584) This SNPRM collectively refers to the ATBCB's final accessibility guidelines and DOT's final rule as the ''ADAAG.''

III. Notice of Proposed Rulemaking

We published a notice of proposed rulemaking (NPRM) on February 26, 1993 proposing to create a new safety standard for buses equipped with lift systems. (58 FR 11562)

In the 1993 NPRM, we proposed minimum platform dimensions and limits on the size of protrusions on the platform surface and gaps between the platform and either the bus floor or the ground. In addition, we proposed requiring platforms to have wheelchair retaining barriers or devices, handrails, and a threshold warning signal. We also proposed performance tests for the evaluation of lift strength, the ability of the lift to retain a wheelchair on its platform, and the platform's slip resistance. We also proposed operational and interlock requirements to prevent accidental movement of the lift when someone is aboard. Finally, we addressed platform markings, free-fall velocity, jacking (*i.e.,* the continued effort of the lift motor to lower the lift after the lift has already contacted the ground, thereby potentially jacking up or raising that side of the vehicle), and platform deflection.

IV. Comments to the NPRM

We received approximately 35 comments on the NPRM. Commenters included vehicle manufacturers, lift manufacturers, State and local governments, school bus contractors, ATBCB, the American Public Transit Association (APTA), the National Truck Equipment Association (NTEA), advocacy groups representing individuals with disabilities, and individuals.

Most commenters, including lift and vehicle manufacturers, most State organizations, and advocacy groups, believed that there was a safety need for the proposed safety standard. However, some commenters, including a private bus contractor and the California Association of Coordinated Transportation, stated that we had not established such a need.

Commenters also addressed such issues as the extension of the standard

[5] 42 U.S.C. 12204.

[6] Throughout this document, we refer to lifts covered by the proposed standard as ''platform lifts.'' The proposed standards would not apply to ramps or devices where the disabled individual is transferred to a built-in mobility device. The lifts must meet the needs of wheelchair users and other individuals who are unable, due to a disability, to negotiate a vehicle's steps, e.g., individuals who use canes or walkers rather than a wheelchair. We have designed the proposed standard with the needs of all mobility-impaired occupants in mind.

to multipurpose passenger vehicles (MPVs), harmonization with Federal and industry standards, and test procedures and requirements for slip resistance, the control system, handrail deflection, platform protrusions, platform acceleration, fatigue endurance, static load, single point failures, wheelchair retention devices, platform stow and deploy velocity, platform gaps, roll stops, and lift stowing.

Our responses to the relevant comments are discussed below.

V. Supplemental Notice of Proposed Rulemaking (SNPRM)

A. Overview

We have decided that a supplemental notice of proposed rulemaking (SNPRM) will be beneficial for several reasons. First, the comments on the 1993 NPRM are now over six years old. Second, we have decided to propose two standards, instead of one, and to assign each of them a different Federal motor vehicle safety standard number: Standard No. 141, instead of Standard No. 401, and Standard No. 142. We believe that two standards, one addressing the platform lift and another addressing the vehicle on which the lift is installed, would best protect lift occupants and bystanders. This two-prong approach is the same one we took in regulating underride guards. Under today's proposal, lift manufacturers would have to certify that their lifts meet the proposed requirements and lift installers for new vehicles would have to ensure that the lifts are installed according to the lift manufacturer's instructions. The changed standard numbers are consistent with our three existing categories: crash or incident avoidance in the 100 series, crashworthiness in the 200 series, and post-crash events in the 300 series. Third, we have expanded the proposed platform lift safety standard so that it would apply not only to buses, but to all motor vehicles sold with lifts installed. Fourth, our supplemental proposal also refines the initially proposed requirements and test procedures to reflect relevant comments and testing done since the NPRM at our Vehicle Research and Test Center (VRTC) and other test facilities. For example, we have altered the tests for wheelchair retention, inner roll stops, and slip resistance and added a fatigue test and an ultimate load test.

We have also changed the proposed platform lift standard's title to ''Platform Lift Systems for Accessible Motor Vehicles'' (instead of ''Lift Systems for Accessible Transportation''). The modified name is intended to more accurately reflect our authority. We are only authorized to regulate motor vehicles; the term ''transportation'' in the title could have been interpreted to apply to other transportation modes such as light rail. For purposes of this document, the proposed Standard No. 141, ''Platform Lift Systems for Accessible Motor Vehicles'' will be referred to as the lift or platform lift standard; the proposed Standard No. 142, ''Platform Lift Installations on Motor Vehicles'', will be referred to as the vehicle standard.

B. Need for Federal Motor Vehicle Safety Standards

Analysis conducted by our National Center for Statistics and Analysis (NCSA) to support the NPRM revealed eight wheelchair fatalities between 1973 and 1991 due to motor vehicle-related events, including two deaths involving a platform lift. These data were obtained from the Consumer Product Safety Commission's Death Certificate File. Additionally, by analyzing the CPSC's National Electronic Injury Surveillance System's (NEISS) accident data for a five-year period, NCSA determined that between 1986 and 1990, 14 percent of the total number of wheelchair-related injuries resulting from motor-vehicle situations other than collisions were the result of a malfunctioning lift (521 cases out of 3,774). All 521 individuals were treated at the emergency room and released. 28.8 percent of the individuals (150 out of 521) sustained minor injuries, 44.3 percent (231 out of 521) sustained moderate injuries, and 26.9 percent (140 out of 521) sustained serious injuries.[7]

In response to the NPRM, most commenters, including many vehicle and lift manufacturers, advocacy groups, and State and local governments, supported the proposed Federal safety standard for platform lifts. A few commenters claimed that no safety need had been shown and that too few injuries had been documented.

Based on the available information, we have tentatively determined that a Federal motor vehicle safety standard for vehicles equipped with platform lifts will help prevent injuries and fatalities during lift operation. As explained above, NCSA's preliminary analysis showed 521 persons injured by lifts between 1986 and 1990: 381 in vans and 140 in buses. Two deaths were associated with the use of a lift between 1973 and 1991. Additionally, from 1991 to 1995, an estimated 7,121 wheelchair users were injured as a result of some interaction with a motor vehicle.[8] A total of 1,366 people, nineteen percent of the total, were injured by lift malfunction. No lift-related fatalities were reported during that time frame. Approximately three percent of the lift-related injuries from 1991 to 1995 were considered serious.

We believe there may be considerably more injuries due to malfunctioning lifts than the numbers suggest. Any analysis of deaths or injuries based on motor vehicle-incidents will necessarily underrepresent the scope of the problem. Since lift-related injuries frequently are not reported as a motor vehicle incident, no police report is filed. Consequently, the event is not entered in the data bases we access for injury and death information related to motor vehicles (e.g., police reported incidents from states, NASS, and FARS). Additionally, the injury count understates actual injuries, because it does not include incidents in which the injured persons were treated at small hospitals, emergency care centers, or doctor's offices. NEISS only includes injuries treated at hospital emergency centers. In addition, some cases in the NEISS were not included because there was not enough information to identify the accident as conclusively being related to platform lift safety.

We anticipate that more people will use motor vehicles equipped with lifts as the ADA requirements make transportation more accessible to individuals with mobility impairments and as the proportion of older people in the general population increases. NCSA's analysis has already revealed an upward trend in the number of lift-related injuries. As the number of lift-equipped vehicles increases, the number of lift-related injuries is also likely to go up.

In order to accurately explore the level of risk to individuals using lifts, one must first ascertain the size of the potential lift-using population. We recognize that the vast majority of the American public does not need to use platform lifts. In 1990, the Centers for Disease Control conducted a survey on assistive technology devices.[9] The authors of the survey determined that,

[7] The Technical Note for this analysis, ''Wheelchair Occupants Injured in Motor-Vehicle Related Accidents'', can be found under Docket 91–19, Notice 1.

[8] For an analysis of wheelchair/motor vehicle injuries from 1991 to 1995 see Technical Note, ''Wheelchair Users Injuries and Deaths Associated with Motor Vehicle Related Incidents'', September, 1997, located at Docket No. NHTSA–98–4511.

[9] LaPlante MP, Hendershot GE, Moss AJ. Assistive technology devices and home accessibility features: prevalence, payment, need, and trends. Advance data from vital and health statistics; no 217. Hyattsville, Maryland: National Center for Health Statistics. 1992.

as of 1990, 8,487,000 people in the United States use some type of mobility device.[10] Additionally, NCSA has determined that there are approximately 383,000 vehicles with adaptive equipment in the United States.[11] This estimate is based on data from our National Automotive Sampling System.

(1) We request comments on the size of the potential lift-using population. This includes individuals utilizing wheelchairs, canes, or walkers due to a mobility impairment or disability.

(2) We request comments on the number of MPVs which are ramp-equipped rather than lift-equipped. Please specify whether the MPVs are personally licensed vehicles or used for public or commercial transportation.

(3) We request information regarding the number of platform lifts installed on motor vehicles since January 1, 1997. How many of those lifts were installed on motor vehicles by lift manufacturers?

(4) How many of these lifts (manufactured after January 1, 1997) were installed (a) prior to first vehicle sale and (b) after first vehicle sale? How many lifts were installed by companies other than vehicle manufacturers?

Lift accessibility affects a mobility-impaired population that will increasingly be using this equipment. We note, in this regard, that the ADA requires lifts on most transit vehicles manufactured after 1990. The lifts on these vehicles should be safe. Issuing FMVSSs provides the best way to ensure that only systems that comply with objective safety requirements are placed in service. The proposed standards would ensure a level of safety and uniformity that would instill confidence in the user population. While the ADAAG provide a good start, they establish few objective performance criteria. For example, S38.23(b)(6) states, ''The platform surface shall be * * * slip resistant,'' but does not define slip resistance or establish how to demonstrate slip resistance.

Additionally, our regulatory framework provides specific procedures to quickly address vehicles and motor vehicle equipment that are out of compliance or contain a safety defect, including a procedure that can be followed to remedy the situation if a problem is found. In contrast, the ADAAG provide neither a procedure for establishing the safety of a lift nor one for recalling and repairing lifts of a specific model that are found to be unsafe.

Our decision to propose standards has support among commenters on the NPRM. Several commenters, including Washington State, Mobile-Tech and the Transportation Manufacturing Corporation (TMC), stated that one Federal agency should regulate all lifts. TMC stated that ''the industry should be able to rely on the government to provide a single clear set of regulations to meet the ADA.''

(5) We seek comments as to which of the proposed requirements will most contribute to the reduction of injuries, and why.

C. Harmonization With Governmental and Industry Standards

In developing both the NPRM and the SNPRM, NHTSA has examined existing standards and guidelines for platform lifts and sought to harmonize with them to the extent consistent with its statutory authority to establish safety standards. These existing standards and guidelines include the ADAAG; the set of advisory guidelines developed in 1986 under the sponsorship of the Federal Transit Administration (FTA); procurement standards developed by the Department of Veteran Affairs (DVA standards);[12] school bus standards of Indiana, Arizona, and the Eleventh National Conference on School Transportation; the Canadian Standards Association; the Swedish Board of Transport; the British Code of Practice; and industry-recommended practices developed by the Society of Automotive Engineers (SAE).

We have incorporated many aspects of the ADAAG in its proposed standard because many buses are required by the ADA to be accessible. School buses, which are exempt from the ADA, are required to comply with the accessibility standards of the Rehabilitation Act of 1973, which mirror those of the ADA. Together, these buses comprise the largest number of buses equipped with lifts.

We note that the National Technology Transfer and Advancement Act requires Federal agencies to use technical standards that are developed or adopted by voluntary consensus standards bodies when such technical standards are available (*see* section 12(d) of Pub. L. 104–113) and are consistent with authorizing legislation of the agencies. Consistent with this statute, we have reviewed current industry standards, particularly those prepared by the SAE.[13] In addition, we have reviewed current government standards, particularly those prepared by FTA.[14] This SNPRM incorporates the most relevant requirements of the voluntary standards and guidelines such as those from the DVA, SAE, FTA and the ATBCB, to the extent appropriate.

We have evaluated all of the incorporated standards and believe that they are practicable, objective, and meet a safety need. To the extent an existing standard does not meet these criteria, we have proposed a modified version of that standard or decided against incorporating that standard. Otherwise, we have incorporated existing standards to achieve uniformity.

D. Applicability and Effective Date

In the 1993 NPRM, we proposed a new safety standard for new buses (including school buses) equipped with a platform lift. We requested comments on the appropriateness of applying the proposed requirements to MPVs and to over-the-road buses (*i.e.,* a bus with an elevated passenger deck located over a baggage compartment).

We now propose applying the platform lift safety standard to lifts designed for installation on any vehicle, including over-the-road buses, school buses and MPVs.[15] Seventy-three percent of the injuries reported in the Technical Note supporting the NPRM occurred in MPVs rather than buses. Additionally, our analysis of motor vehicle/wheelchair-related injuries from 1991 to 1995 indicates that approximately 48 percent of all injuries involved MPVs, while only 12 percent involved buses. The majority of vehicles with lifts are MPVs. While not all MPV's are subject to the ADA (*i.e.,* those used only for personal transport), many are, because they are used for commercial transport (*e.g.,* van pools). Further, our concern for the safety of vehicle occupants extends beyond the ADA.

Comments were requested for over-the-road buses because, at the time of the NPRM, the ADA had not required lifts on such vehicles, if privately

[10] The specific breakdown of the types of devices is as follows: crutch—671,000; cane or walking stick—4,400,000; walker—1,687,000; wheelchair—1,411,000; scooter—64,000; other—254,000.

[11] Research Note: Estimating the Number of Vehicles Adapted for Use by Persons with Disabilities (12/97).

[12] *VA Standard Design and Test Criteria for Safety and Quality of Automatic Wheelchair Lift Systems for Passenger Motor Vehicles,* (June, 1977).

[13] Two 1995 SAE Recommended Practices apply to wheelchair platform lifts: J2092—*Testing of Wheelchair Lifts* and J2093—*Design Considerations for Wheelchair Lifts.* The SAE Standard is an update of the DVA procurement standard for wheelchair lifts published in 1977 and applies to lifts installed in personally-licensed vehicles.

[14] *Guideline Specification for Passive Lifts, Active Lifts, Wheelchair Ramps and Securement Devices,* (1992).

[15] Definitions of ''bus'', ''truck'', ''truck tractor'', and ''multi-purpose passenger vehicle'' can be found at 49 CFR Part 571.3. The definition of a ''school bus'' can be found at 49 U.S.C. 30125. The definition of a ''motor home'' used in this document can be found at 49 CFR Parts 571.105 and 571.201.

owned. On September 28, 1998 the Department of Transportation published a final rule which will require over-the-road buses to have lifts, on a graduated basis, starting in 2000.[16] Of the commenters to the 1993 NPRM, only Braun specifically commented on the applicability to this type of vehicle; it favored applying the proposed requirements to over-the-road buses. We tentatively conclude that since these buses will have lifts, those lifts should be subject to this proposed standard. Excluding lifts on over-the-road buses from the proposed standard would be counter-productive to two of the proposed standard's primary purposes: enhancing the safety of both public and private vehicles and promoting the uniformity of government standards.

Most commenters, including bus manufacturers, lift manufacturers, States, and the Paralyzed Veterans of America (PVA) supported applying the requirements to lift-equipped MPVs and buses. They believed that all lift users should be afforded a similar level of safety. TMC stated that the NCSA study indicated that most wheelchair-related injuries involved vans. Thomas Built was concerned that excluding MPVs would allow a manufacturer to circumvent compliance by omitting a seat so that it seated only ten occupants rather than eleven, changing it from a bus to an MPV.

NTEA opposed applying the lift standard to MPVs, claiming that such a requirement would result in an undue burden and increased costs on small businesses. However, most of the compliance burden would be borne by the lift manufacturers, none of whom objected to applying the requirements to MPVs. Additionally, we believe that most of the proposed requirements are already being met on either a volunteer or contractual basis under existing industry and Federal guidelines and standards.

We are proposing to make the new standards, if adopted, effective one year after publication of the final rule in the **Federal Register**. We believe that lift manufacturers generally will not need to make substantial changes to their existing lifts. We recognize, however, that some work may be needed to fully comply with the lift standard. We believe that a one-year lead time should provide plenty of time to adopt any needed changes.

(6) We seek comment on whether an effective date of one year after publication of a final rule would be sufficient to allow platform lift manufacturers to meet the requirements of the proposed platform lift standard.

E. Different Requirements for Platform Lifts Designed for Installation on Vehicles Other Than Buses and Large MPVs

We believe that fewer requirements may be necessary for platform lifts installed on MPVs than for those installed on buses. The reason for this is that lifts designed for MPV's have different usage patterns than those designed for buses. In the NPRM, we proposed a single set of requirements for buses and accordingly made no distinction between vehicle types. We did, however, seek comment on the potential applicability of the proposed standard on MPVs. Most commenters did not distinguish between applying the safety standard to MPVs used in public paratransit and those licensed to individuals for personal use. However, a few commenters, including TMC, appear to have intended their comments on MPV use to apply only to public paratransit cases. Comments were mixed about the need to differentiate the requirements based on vehicle type. Lift-U and Thomas Built stated that only MPVs used for paratransit (and not individually owned MPVs) should have to comply with the lift requirements. Stewart and Stevenson (a lift manufacturer) stated that smaller vehicles should have different requirements because they would have difficulty absorbing the weight of lifts used with larger buses. Mobile-Tech stated no differentiation should be made by vehicle type.

We not only have authority under 49 U.S.C. 30111 to adopt different requirements for vehicles based on differences in vehicle characteristics, we are mandated by law to consider whether our requirements are ''reasonable, practicable, and appropriate for the particular type of vehicle'' to which they apply. Pursuant to this authority and mandate, we are proposing requirements for lifts designed for installation on buses and MPVs with a GVWR greater than 3,220 kg (7,100 lbs)[17] which are, in some cases, more stringent than those for lifts designed for all other vehicles.[18] We believe that this is appropriate given that most of these larger vehicles are for public transit and paratransit use, rather than individual use. Since the lifts on these vehicles will generally be subjected to more stress and cyclic load and will be used by a larger and more varied population, more requirements as to platform size, controls, handrails and lighting appear appropriate.

Under FMVSS No. 208, we differentiate between vehicles having a GVWR of less than or equal to 3,851 kg (8,500 lbs) and those having a higher GVWR. We use this breakpoint because the higher rated trucks or MPVs are typically used to carry equipment or cargo (*e.g.,* maintenance vehicles) and are not primarily used to transport people. However, we believe that a lower dividing line is appropriate for this proposal. We note that the majority of MPVs used for public paratransit have GVWR greater than 3,262 kg (7,200 lbs) (*e.g.,* Ford E250, E350 or equivalent chassis). In contrast, the majority of MPVs modified and licensed to individuals for personal use have a GVWR less than 3,171 kg (7,000 lbs) (*e.g.,* Ford E150, or equivalent chassis). Accordingly, we believe that dividing the vehicles into two groups, buses and MPVs over 3,220 kg (7,100 lbs) and all other vehicles, would adequately delineate personal and transit or paratransit vehicle use. We do note that where the ADA imposes requirements on commercial entities and those entities use a vehicle that weighs less than 3,200 kg (7,100lbs), the commercial entity would still have to meet the applicable ADA requirement.

Among the proposed requirements that would not apply to lifts designed for vehicles other than buses and heavier MPVs are those for platform operating volume, handrails, platform lighting, inner roll stops, or control label lighting. In addition, if a fatigue test were adopted, it would be less stringent for these lifts since we anticipate that the lifts on these vehicles will experience fewer operating cycles per day. Each of these specific requirements are discussed in their respective sections.

Since publishing the NPRM in 1993, we have learned that in addition to buses and vans, lifts are also installed in trucks, truck tractors (*e.g.,* semis), trailers, and motor homes. These vehicles are typically used as personal vehicles. We believe that the lifts on these vehicles are not subjected to the greater use of lifts on buses or larger MPVs. Instead, the lifts installed on these vehicles are more akin to lifts installed on lighter MPVs than on lifts installed on vehicles intended for commercial transit. Additionally, individuals purchasing these lifts are

[16] 63 FR 51669 (9/28/98).

[17] The preamble and the regulatory text references all weights and measurements under the metric system with the English equivalents set out in parentheses. If the proposed regulatory text is adopted, the English equivalents will be dropped from the preamble of the final rule and the final regulatory text.

[18] The next section discusses the differences in such requirements.

unlikely to have the resources to pay for the heavier lifts. Nevertheless, the interface between lift and vehicle on some of these vehicles could pose an unreasonable risk if the platform lifts designed for the vehicles were excluded from the stricter performance requirements contemplated for larger MPVs and buses. We believe that the only serious risk to safety that is not contemplated by the proposed requirements for lighter MPVs is the lack of a mandatory inner roll stop. Accordingly, lifts designed for truck tractors, trailers and motor homes would be subject to the same performance requirements as lighter MPVs except that the lifts would be required to have an inner roll stop. Platform lifts designed for other trucks, *e.g.,* pick-up trucks, would be subject to the same performance requirements as lifts designed for lighter MPVs.

(7) We request comments about the appropriateness of having less stringent requirements for platform lifts designed for installation on vehicles that have lower GVWRs, trucks, trailers, truck tractors and motor homes, and all motor vehicles, other than buses and heavy MPVs, that are presumably for individual use.

(8) We also request comments about whether the proposed breakpoint of a 3,220 kg GVWR (7,100 lbs) for MPVs is appropriate, and whether there is any reason not to permit any of the vehicles referenced in question number 5 to comply with less stringent requirements.

F. Proposed Platform Lift Requirements

1. Threshold Warning Signal

Today's proposal differs from the NPRM in that it contains a threshold warning signal and deletes the audible and visual deployment warnings of the NPRM. The deployment warnings were based on the 1992 FTA guidelines. Since these alarms have been dropped by the FTA in its 1997 and 1999 guidelines, we have also deleted them from the proposed FMVSS.

This notice is proposing to require one signal, which would be a threshold warning alarm. For vehicles other than buses and MPVs with a GVWR greater than 3,220 kg (7,100 lb), the alarm could be either audible or visual. Lift systems designed for installation on buses and larger MPVs would need to have both a visual and an audible alarm since these larger vehicles are generally used for commercial transport. In all vehicles, the alarm would warn lift users if the lift platform were more than one inch below the vehicle's floor reference plane and if any portion of the platform threshold area [19] were occupied by any portion of the lift occupant's body or any piece of equipment. Functionality of the warning system would be tested at the location indicated in figure 3, which is attached to the proposed regulatory text. This warning requirement is based on an SAE standard requiring a warning if the lift user is within 18 inches of the platform and the platform is more than one inch below the vehicle's floor reference plane. We consider this proposed warning requirement to be particularly important in transit and paratransit vehicles where the lift may be used sequentially by more than one individual. It is also important in any personally licensed vehicle in which the lift is fitted such that the user backs onto the lift from the floor of the vehicle (this typically occurs on lifts fitted to the rear of the vehicle). This proposed requirement would not apply to rotary lifts where loading takes place entirely over the surface of the vehicle's floor.

After reviewing the available information, we have decided to drop the audible and visual deployment warnings proposed in the NPRM and to add the threshold warning requirement based on the SAE standard.

(9) We seek comments on whether an audible or visual threshold warning should be required and whether the proposed warning would achieve the desired purpose of avoiding injury to the lift user caused by an out-of-position platform.

(10) We also seek comment on whether a minimum should be specified for the size or weight of an object that causes the threshold warning to operate and, if so, what that minimum should be.

2. Platform Lift Operational Requirements

Compliance with several of the platform lift requirements would be tested in accordance with Static Load Test I which is fully discussed later in this document. Under this test, the lift would be tested both empty and with a 272 kg mass (600 lb load). As an example, this mass requirement is approached by two separate potential weight combinations: that of a 99th percentile male, weighing 109 kg (241 lbs), with a powered wheelchair, weighing 113 kg (250 lbs), for a total weight of 222 kg (491 lbs); and that of a 99th percentile male in a manual wheelchair and an attendant (245 kg (540 lbs)). While these examples are below the 272 kg limit, in some cases people and wheelchairs will weigh more, thus justifying the limit. Additionally, industry standards and the ADA require a 272 kg lifting capacity. Testing with an empty platform would be specified to ensure that the lift operates properly when carrying smaller occupants.

a. Maximum Platform Velocity

We are proposing maximum platform operating speeds for the safety of lift users, especially standees (*e.g.,* individuals who use a cane or walker). Section S5.2.2 specifies a maximum vertical and horizontal velocity of the platform of 152 mm/s (6 in/s). This is the same maximum velocity suggested in the NPRM. We received no comments about the maximum velocity in comments to that document.

We have decided to propose the 152 mm/s (6 in/s) maximum velocity to assure the safety of those on or near the lift and to be consistent with the ADAAG (49 CFR 38.23(b)(10)) and FTA guidelines (section 2.5.11), which also allow a maximum velocity of 152 mm/s (6 in/s).

We stated in the NPRM that a maximum speed limit was necessary for the safety of persons in or near the bus when the lift was being deployed. We were also concerned for the safety of lift users.

In the NPRM, we also discussed, but did not propose, requirements for platform velocity during the stowing (folding) and deploying (unfolding) sequences. Based on our review of the ADA standard, we have decided to propose that during stowing and deploying, the lift platform would have a maximum vertical and horizontal velocity of 305 mm/s (12 in/s). The purpose of this requirement, which is consistent with the ADA standards, is to reduce the potential injuries to bystanders and lift users.

The NPRM proposed that a cycle be completed within 65 seconds. The SNPRM has dropped the maximum cycling time because it is not clearly related to safety.

(11) We request comments about whether there is a safety need for velocity limits on platform stowing and deploying. Are any incidents known to have occurred that are directly related to the excessive velocity of deploying or stowing platform lifts?

[19] The platform threshold area is defined in the proposed regulatory text as the rectangular portion of the vehicle floor defined by moving a line, which lies on the edge of the vehicle floor directly adjacent to the lift platform, through a distance of 18 inches (457 mm) in a direction perpendicular to the line including any portion of a bridging device that lies within this area.

b. Maximum Platform Acceleration

We have decided to propose an acceleration limit of 0.3 g with both no load and with 272 kg (600 lbs) on the platform. The acceleration would be measured along axes horizontal and perpendicular to the lift platform. The no load condition is intended to ensure that even very light occupants would be protected against a sudden increase in lift speed, since very small children may use lifts, especially in school buses. By requiring compliance at any load in between the extremes, we intend to ensure that acceleration remains within the desired limits. In the NPRM, we proposed (section S5.10.3) a maximum platform horizontal and vertical deceleration of 0.3 g, either with no load or with a 600 pound load applied.

Lift-U commented that the platform acceleration limit of 0.3 g should only apply when the platform is loaded with 600 pounds. The commenter also believed that the channel filter class specification (CFC) 60 from SAE J211 required the test to be performed with an instrumented test dummy.

We believe that it would be inappropriate to adopt Lift-U's recommendation to test only when the platform is loaded. The 272 kg (600 lbs) mass requirement is based on a determination that this weight would approximate the upper end of lift users who use a powered wheelchair. It is unlikely that the average lift user, even in a powered wheelchair, would have a mass of 272 kg (600 lbs). Additionally, testing only at the maximum intended load level would fail to address the safety concerns of children in wheelchairs or standees, who may be subjected to greater acceleration since the lift would be carrying lighter loads.

As for Lift-U's concern about having to use a test dummy because of the NPRM's reference to SAE J211, we note that J211 merely provides a frequency response specification for the filter to be used with the accelerometer. We do not intend to specify the use of a test dummy. Section S5.2.3 in this SNPRM clarifies this point and indicates that the accelerometer would be mounted directly to the test platform or to the 272 kg mass (600 lb load).

The 0.3 g acceleration limit was originally specified by the DVA standard. The 0.3 g limit was developed by measuring the acceleration of a test dummy placed in a wheelchair when riding on a lift. The specification was designed to avoid platform acceleration levels that were frightening, uncomfortable, or potentially dangerous to a wheelchair occupant. Since the DVA standard was published, the 0.3 g acceleration limit has been incorporated into the SAE, FTA and ADA lift requirements (J211, section 2.5.11, and 49 CFR 38.23(b)(10), respectively).

We are proposing to depart from the test procedure detailed in SAE J211 by specifying testing with a CFC 3 filter instead of a CFC 60 filter. We believe a CFC 3 filter better achieves the desired result, which is essentially to replicate a wheelchair's damping characteristics. Testing performed at VRTC [20] indicated that the CFC 60 filter does not provide sufficient damping to eliminate extraneous high frequency components of the platform acceleration measurement when the transducer is mounted directly to the platform.

c. Maximum Noise Level

We have decided to propose establishing a maximum permissible noise level of 80 dBA for platform lifts.

In the NPRM, we proposed that the maximum noise level for the lift be limited to 75 dBA. We believed that such a provision was necessary to prevent noise caused by lift operation from obscuring the 85 dBA warning signal, and to allow oral instructions from the transit operator to be heard during lift operation. This proposal was identical to section 2.1.7 of the FTA-sponsored guidelines.

TMC commented that ''the task of isolating the wheelchair lift noise to 75 dba, is unreasonable. The bus engine runs while the lift is operational and the engine noise is limited by regulation to 83 dba.''

We agree with TMC that a maximum noise level of 75 dBA is too low. VRTC measured sound levels at six different locations in an urban setting to measure ambient noise.[21] VRTC found that the sound levels often exceeded 75 dBA, with the loudest location having an average of 79 dBA. Since the ambient noise level in an urban setting may often be greater than 75 dBA, we believe it is reasonable to allow a lift to exceed this noise level. 80 dBA represents the maximum permissible volume of ambient noise that allows for normal communication between two people who are three feet away from each other.[22] We believe that a maximum noise level of 80 dBA should be quiet enough to allow for easy communication between a lift operator and a lift passenger without unduly restricting lift designs. We recognize TMC's concern that bus engines are allowed to run at noise levels up to 83 dBA; however, the existence of such a regulation does not mean that bus engines actually run at that level, only that they can. VRTC tested urban noise levels at bus stops and found the ambient noise at the loudest location was less than 80 dBA. Accordingly, we believe a maximum level of allowable noise is reasonable at 80 dBA.

(12) We request information about whether any injuries can be directly attributed to noise interfering with communication between the lift user and the vehicle's driver, the lift operator, aides, or bystanders.

3. Platform Requirements

a. Unobstructed Platform Operating Volume

We are proposing a minimum clear platform width of 724 mm (28.5 in), on the upper surface of the platform, a minimum clear width of 762 mm (30 in) at and between the heights of 51 mm to 762 mm (2–30 in) above the platform surface, and a minimum clear length of 1,219 mm (48 in) measured from 51 mm (2 in) above the surface of the platform. These minimum platform size requirements are based on the ADA standards. Under the proposed platform lift standard, no part of the lift or bus (except for a required barrier on a platform edge) could intrude into the area above the portion of the platform that would be occupied by a large wheelchair at any point during its operation.

The unobstructed platform operating volume proposed in this document is the same as the one proposed in the NPRM. No commenter addressed the issue of platform operating volume requirements.

Unobstructed platform operating volume requirements address the safety of passengers in several ways. These requirements ensure that:

- Parts of the lift are not introduced into the space occupied by the user while the lift is in motion;
- Users do not injure themselves trying to enter lifts that are too small for their mobility devices; and
- Mobility device users are not left waiting at the bus stop because their devices would not fit on the lift.

We have decided not to propose an unobstructed platform requirement for platform lifts designed for installation on vehicles other than buses and MPVs with a GVWR greater than 3,220 kg (7,100 lbs). We believe requiring all lifts to comply with the proposed requirement could require major vehicle

[20] *Determination of Electronic Filtering for Post-Processing of Wheelchair Lift Acceleration Data,* (July, 1996) Docket No. NHTSA–4511.

[21] *An Evaluation of the Proposed Wheelchair Lift Safety Test Procedure,* (June, 1996).

[22] W.E. Woodson, B. Tillman, P. Tillman, *Human Factors Design Handbook, Second Edition,* McGraw, Hill, Inc. (1992).

structural modifications of some vehicles with a lower GVWR. If so, lift manufacturers can address platform dimensions and recommend appropriate vehicles and wheelchairs without referring to a uniform federal regulation. We also believe that users of personally-licensed vehicles will work with the lift installer in purchasing a lift of an appropriate size for their vehicles and wheelchairs. To assist secondary purchasers of lift-equipped vehicles, the vehicle owner's manual must specify the unobstructed platform operating volume so that lift users will know whether their wheelchair will fit on the lift.

(13) We request comments on our decision not to propose platform operating volume requirements for platform lifts designed for installation on vehicles other than buses and MPVs with a GVWR greater than 3,220 kg (7,100 lbs), but to require the manufacturer to provide an insert for the vehicle owner's manual that details the operating volume.

b. Platform Surface Protrusions

For vehicles over 3,200 kg (7,100 lbs) we propose that the upper surface of the lift platform be free from protrusions greater than 6.5 mm (0.25 in) high, and a method for measuring the height of protrusions has been added since the NPRM. The purpose of this proposed requirement is to facilitate movement on and off the platform by prohibiting protrusions that constitute obstacles to wheelchair occupants and tripping hazards to standees. After reviewing the available information, we have decided to propose the same protrusion requirements as the ADAAG for these vehicles, and retain the requirement proposed in the NPRM for all other vehicles.

ATBCB commented in response to the NPRM that the platform protrusion requirement proposed at that time was less stringent than the ADAAG.[23] PVA requested that we follow the ADAAG requiring less than 6.5 mm (0.25 in) protrusions regardless of whether they are perpendicular to the lift surface. TMC stated that its passive lift is designed with a hinge in the middle of the platform that has a 25.4 mm (1 in) protrusion above the platform surface. It claimed that the platform surface has a gradual slope that never exceeds 1:8 as it approaches the hinge. Flxible stated that our proposals differed from the ADAAG, but are acceptable and do not negate ADA and FTA guidelines. No other manufacturer stated that they would be unable to meet the proposed protrusion requirements.

In consideration of the comments of, and discussions with, the FTA and ATBCB, have changed the proposed requirement for buses and larger MPVs (those more likely to be subject to ADAAG and used by multiple people daily) to mirror the ADAAG, and we propose a method for measuring platform protrusions. We recognize that the proposed standard does not resolve TMC's concerns. However, since we received no other comments which indicated that the protrusion limits could not be met, we believe the requirements proposed today are practicable and safe. For all other vehicles (those used more often in private transportation), we continue to believe that slightly higher protrusions can be allowed for smooth rise without either compromising safety or decreasing the vehicle's accessibility as long as the transition between the platform and the protrusion is gradual. We believe that allowing protrusions to be between 6.5 mm and 13 mm (0.25–0.5 in) in these vehicles is consistent with safety for vehicles that will be used by one person with one type of mobility aid. This is also consistent with the transition requirements described in the next section.

c. Gaps, Transitions and Openings

This proposal contains several requirements dealing with gaps and openings in the lift platform and between the platform and other portions of the lift. Openings in the upper surface of the lift platform could be no greater than 19 mm (0.75 in). Since many platforms are made of open mesh, it is important that the openings be small enough that there is no risk of either wheelchair casters or the tips of a cane or walker becoming stuck in the platform surface, which can result in the lift user falling or being tipped out of his or her wheelchair. The 19 mm (0.75 in) limitation is based on the SAE standard.

In the NPRM, we proposed that vertical gaps could not exceed 15.9 mm (0.625 in) and horizontal gaps could not exceed 13 mm (0.5 in). We were concerned that gaps between the lift platform surface and the vehicle could contribute to an injury by trapping a wheelchair caster or the tip of a cane or other mobility device. We noted that our proposal was consistent with both the FTA-sponsored guidelines and ADAAG (36 CFR 1192.23(b)(7); 49 CFR 38.23(b)(7)).

PVA supported the proposed gap limits, claiming that they would prevent wheelchair casters from dropping into gaps. Lift-U and TMC believed that the proposed gap requirements needed to be clarified due to varying lift designs.

Based on the comments and other available information, we have decided to propose platform gap requirements that differ from those in the NPRM. In the NPRM, we made several assumptions in drafting the proposed gap requirements. Key among these assumptions was that the lift would always be attached to the side of the vehicle. We are now aware of some lift designs which allow for the lift to be attached to the rear of the vehicle. Other assumptions were that the outer barrier would always serve as the vehicle entrance ramp, that the outer barrier and inner roll stop would always be completely vertical when deployed, and that there would be no gaps between the barriers and the platform edge. The proposal in the SNPRM makes no such assumptions and allows for a test block to ensure that any gaps between these structures be limited. We believe that such a test block provides a simple, yet objective means of measuring gaps between the platform and its barriers. The NPRM also did not propose to require edge guards when vehicle loading took place completely within the vehicle (*e.g.,* within the step well of a bus). This position fails to adequately address the risk from gaps between the lift platform and the interior sides of the vehicle; these gaps potentially lead to a greater risk of injury than gaps between a lift platform and edge guards attached to the platform because of the relative motion.

Under the proposed requirement, no vertical surface transition could be more than 6.5 mm (0.25 in) at either the ground or vehicle level; horizontal gaps would be limited to 13 mm (0.5 in). The total allowable rise of any sloped surface, typically ramps or bridging devices, would be limited to 76 mm (3 in). The allowable slope on the portion of the rise between 6.5 mm and 13 mm (0.25–0.5 in) above the ground, platform surface or vehicle surface would be limited to a 1:2 ratio; a 1:8 ratio would be allowed for the portion of the ramp above 13 mm (0.5 in). This proposed requirement is consistent with the ADA standard for ground-level platform entrances. It matches the ground-level entrance requirements in the NPRM, except that it adds the requirement that the maximum rise cannot exceed three inches.

To facilitate entering and exiting the vehicle, the ADA, FTA and SAE standards require the height of the platform and vehicle floor to be within 15.9 mm (0.625 in) of each other and the horizontal gap between them be no

[23] The ADAAG requirement reads, ''The platform surface shall be free of any protrusions over ¼ inch high * * *''.

more than 13 mm (0.5 in). These requirements were originally found in the DVA standard. Many current lift designs use a bridging device between the lift and the vehicle floor. For these designs, the relative height and gap between the platform and the vehicle floor is not as important as the transitions and slopes that the users must traverse to enter and exit the vehicle. Accordingly, we believe that there is no compelling reason to have different specifications for entrance and exit of the platform at floor level than for entrance or exit of the platform at ground level. By using the ADA ground ramp specification at the vehicle floor level as well as the 13 mm (0.5 in) horizontal gap specification, we believe it would be imposing a more stringent requirement at the vehicle floor level than currently contemplated by the ADA standard. This more stringent standard should allow for an easier entrance into the vehicle because of less abrupt transitions.

Gaps between the upper surface of the lift platform and either the outer barriers or the inner roll stops [24] could be no greater than 15.9 mm (0.625 in) when fully deployed. The gaps would be tested with a test block which would require that a block with dimensions of 15.9 x 15.9 x 102 mm (0.625 x 0.625 x 4.0 in) not pass between any gaps. Since the test is a dimensional check, no force would need to be applied against the block. Gaps between the lift and edge guards permanently fixed to the ramp could not exceed 13 mm (0.5 in) throughout the range of lift operation. Edge guards which are an integral part of the vehicle may not be further than 6.5 mm (0.25 in) from the platform throughout lift operation.

d. Platform Deflection

We propose requiring that the platform angle not deviate from the vehicle floor by more than one degree when the platform is unloaded and by more than three degrees when the platform is loaded. The platform load for testing would have a mass of 272 kg (600 lbs), centrally placed on the lift. The amount of deviation would be measured throughout the lift cycle. This technique is consistent with the one used in the DVA standard that a specified deflection limit may not be exceeded both before and after loading. The three degree limit is consistent with both the FTA-sponsored guidelines (sections 2.2.5 and 3.1.3) and the ADAAG (49 CFR 38.23(b)(9)). This proposal is designed to correct an assumption we made in drafting the NPRM that lifts would only deflect in one direction (outward). Under this proposal, platform deflection could not exceed the stated limits in any direction. Testing throughout the lift cycle is consistent with the FTA requirement that lifts must meet the deflection limit during the entire lift cycle.

Under the NPRM's proposed test requirement, platform deflection would have been measured when unloaded and when the platform is loaded with a 272 kg mass (600 lbs). The difference between the two measurements was supposed to be less than three degrees, with a three degree limit allowed for the loaded platform.

Stewart and Stevenson preferred what it termed simpler, more descriptive language in establishing deflection amounts of the lift during tests. PVA supported our proposal to limit platform deflection to three degrees.

Platform deflection adversely affects the lift user's sense of security and balance. Additionally, excessive platform deflection could allow manual wheelchairs to be propelled towards the outer barrier, and possibly to gain sufficient momentum to pass over it. By limiting deflection to three degrees when loaded, the deflection angle would not require excessive arm strength for a wheelchair occupant to maneuver onto and off the platform. Additionally, by limiting the level of deflection in any direction, a safe platform angle would be maintained throughout the entire lift cycle.

In this SNPRM, we are proposing minor modifications in the platform deflection requirement. First, the NPRM measured deflection in a single vertical plane, assuming that only the lift would deflect and then only directly away from the vehicle. The NPRM did not account for any roll of the vehicle, which could increase the overall amount of deflection, or for deflection of the lift towards the vehicle or in a direction perpendicular to its mounting location. The revised requirement would not allow deflection greater than three degrees in any direction. Second, this SNPRM would require that the platform angle be compared to the vehicle floor angle in both the loaded and unloaded conditions.

(14) We request comment on whether, in addition to defining a limit on platform deflection with respect to the vehicle floor in FMVSS No. 141, that platform deflection with respect to the ground be limited by a specific requirement in FMVSS No. 142. In effect, this limit would dictate the extent to which the vehicle suspension would allow the vehicle to roll when the lift platform is loaded. Please specify an appropriate value for each vehicle type on which a lift might be installed.

e. Edge Guards

We propose that certain platform sides (*i.e.*, those which parallel the direction that a wheelchair would travel during entry or exit) be equipped with edge guards.

We have decided to propose the same edge guard requirements that were proposed in the NPRM. We continue to believe that such guards can help prevent a wheelchair from sliding off or being driven off the side of the platform.

PVA supported the proposal for edge guards of 38 mm (1.5 in). Lift-U stated that to prevent a trip hazard to ambulatory passengers the requirement should include the following: ''For lifts that serve as the vehicle steps when in the stowed position, edge guards shall not extend outboard beyond the lowest step riser.''

Edge guards can prevent a wheelchair from sliding off or being driven off the side of the platform. We propose requiring that the edge guard be 38 mm (1.5 in) high, a height we believe would be sufficient to deflect the motion of the wheelchair and alert the wheelchair occupant that the wheelchair is at the edge of the platform. Edge guards of this height are required by both the FTA-sponsored guidelines (section 2.2.6.1) and the ADAAG (49 CFR 38.23(b)(5)).

(15) We request comments on whether any existing lifts have edge guards that extend beyond the lowest step riser when the lift, in a stowed position, converts into vehicle steps. Do such edge guards create a tripping hazard when the lift is stowed?

f. Wheelchair Retention

This notice proposes that lifts be equipped with a wheelchair retention device that can sustain a direct force of 7,117 N (1,600 lbs) and can keep a wheelchair in an upright position throughout the range of lift operation. It is anticipated that most wheelchair retention devices would consist of an outer barrier that is permanently affixed to the lift platform.

In the NPRM, we proposed a wheelchair retention requirement that was patterned after the ADA standard. (49 CFR 38.23(b)(5)) We reasoned that there is a potential for severe injury

[24] Inner roll stops are barriers at the transition point between the lift and the vehicle. They are designed to prevent pinching or shearing of an occupant or a wheelchair between the vehicle and the lift platform when the lift moves. Outer barriers are located on the edge of the lift that is distant from the edge of the vehicle. They are designed to prevent an individual or wheelchair from falling or rolling off the lift when it is in motion or when the lift is at the vehicle's floor level.

because a wheelchair falling off a platform could drop as much as three feet. To allow manufacturers to pursue new designs, we proposed requiring ''a means of retaining a wheelchair'' rather than requirement that might be more design-restrictive.

In the NPRM, we specified a performance-related dynamic test procedure to evaluate wheelchair retention. Among the proposed test conditions were testing with a specific wheelchair (the Invacare Ranger II), using test loads representing 5th percentile females and 95th percentile males, using ballast, and requiring a test impact velocity of 1.8 m/s (4 mph). We proposed pass/fail criteria based on retention of the wheelchair on the platform with the wheelchair upright and resting on its wheels. We requested comments on the merits of a dynamic test versus a static test such as in the FTA-sponsored guidelines for active lifts (section 3.1.6.2, Option B). We also requested comments on how this static test could be applied to retention systems which do not make use of an outer barrier.

TMC favored a static test over the proposed dynamic wheelchair retention test. It stated that the standard proposed in the NPRM is not a design standard and would not give reproducible results. Analytical Engineering stated that the wheelchair retention specifications should be amended so that a reasonable equivalent static load can be applied through a set of standard wheelchairs or a similar load apparatus. Braun favored the dynamic outer barrier test, claiming that tests cannot be duplicated by static testing. Thomas Built, Lift-U, and the Florida Department of Education also favored dynamic testing.

We have decided to propose adding a 7117 N (1,600 pound) static overload requirement, in addition to the NPRM's dynamic impact test for wheelchair retention. This static load requirement (S5.5.7.3) is consistent with the SAE and DVA Standards. Testing at VRTC [25] has shown that the dynamic impact test alone is insufficient to measure a restraining device's structural integrity because the load it applies to the barrier begins and ends in a fraction of a second and does not achieve a 7,117 N (1,600 lbs) level. We believe that having both a dynamic impact and static test on the wheelchair retention device would be complementary since they test for different problems. (The static test only tests for structural integrity, while the dynamic test ensures that the wheelchair (especially a powered chair) cannot climb over the barrier.) We note that even though the SAE and DVA standards have only a static load requirement, they also specify that the wheelchair retention device must be an outer barrier with a minimum height of 76 mm (3 in). In order to avoid specifying a particular design, the SNPRM proposes the dynamic test to ensure the wheelchair would be kept on the lift if the wheelchair were driven into the wheelchair retention device. For outer barriers, which are the most common wheelchair retention device, these failure modes include climbing over and pushing down the barrier. By contrast, the static overload requirement provides a means of determining whether the wheelchair retention device has a sufficient design factor of safety.

Based on testing at VRTC, [26] we have decided to propose certain revisions to the test procedure for wheelchair retention (S6.4.3). We have added proposed text to clarify that the test device, representing a motorized wheelchair, must be under its own power when impacting the wheelchair retention device. We believe that this modification more accurately reflects the real world, particularly in determining if the test device could go over an outer barrier. The proposed impact speeds have also been changed to match more closely the speeds a powered wheelchair is capable of achieving. The test device would be set up so the foot rests, at their lowest point, have a height one inch below the barrier. This would allow the front of the foot rest to clear the barrier; this tends to raise the wheelchair upon impact with the barrier, causing higher barriers to be climbed. The test would be run with no load in the wheelchair and with the lift platform level with the ground. The testing at VRTC found this configuration to be the worst case scenario in relation to the height of barrier climbed. The testing also indicated that a load in the wheelchair and inclination of the lift platform contributed to the wheelchair tipping over the barrier. The modified impact test procedure is designed to avoid this failure mode which cannot be prevented by the traditional outer barrier designs.

It should be noted that the selection of this test device should in no way be interpreted as an indication that only mobility aids fitting such description may be safely carried. NHTSA recognizes that all types of mobility aids including all designs of manual and powered wheelchairs, scooters, and other devices are used as seats on motor vehicles.

A new dynamic requirement is being proposed for rotary lifts, which are loaded at the vehicle level while the lift is inside the vehicle (S.5.5.7.2). These types of lifts are typically referred to by the industry as rotary lifts because the platform rotates out of the vehicle with its plane parallel with the vehicle floor. The direction of ground level loading is parallel to the vehicle's side rather than perpendicular to it. Rotary lifts usually have outer barriers on both ends of the platform which are perpendicular to the direction of loading. The new test procedure for rotary lifts (S6.4.4) would assess the wheelchair retention device on both sides of the platform at a point in the lift operation between the ground and vehicle floor.

Instead of proposing a specific wheelchair model, we have decided to propose the critical dimensions, configuration and components necessary to define a wheelchair with sufficient specificity to ensure that any wheelchair used for testing purposes would perform equivalently in the dynamic impact of the wheelchair retention device. These parameters include the center of gravity, mass, wheel size and wheel type, axle separation, frame configuration, seat type and footrest design. The proposed parameters are consistent with several of the most popular wheelchairs currently being produced.[27] Should there be a significant change in wheelchair design, these criteria would have to be changed.

g. Inner Roll Stop

We propose requiring an inner roll stop to prevent a wheelchair from rolling off the platform's inner edge. For arc lifts, i.e., lifts which move in arcing motion from vehicle edge to a distance away from the vehicle edge during operation, this device prevents the lift occupant from falling off the inner edge. For all lifts, it prevents injuries due to pinching and shearing of the occupant's legs or feet between the platform and the vehicle. For elevator lifts, i.e., lifts which move vertically during operation, it is possible for the vehicle wall below the wheelchair lift entry door to perform the function of the inner roll stop.

In the NPRM, we proposed a static test, noting that we had no information about any incidents involving a failure of the inner roll stop to retain a wheelchair on the platform. We further

[25] Further details of this testing can be found in report, *Wheelchair Retention Device Impact Test Analysis,* (July, 1996) Docket No. NHTSA–4511.

[26] Id.

[27] Further detail on the selection of parameters for the test wheelchair can be found in report, *Determination of Center of Gravity of Cross-Bar Framed Power Wheelchairs,* (July, 1996) Docket No. NHTSA–4511.

noted that the possible scenarios appear to involve less risk of serious injury than if a wheelchair were to fall off the outer edge of the platform. The NPRM's proposed inner roll stop test was based on the FTA-sponsored guidelines (section 3.1.6.2), modified by specifying the length of time that the load is applied and the amount of permissible deflection.

The NPRM allowed the deployment of outer barriers or inner roll stops when occupied by a user or mobility aid. AATP and Alameda-Contra Costa Transit District recommended that barriers not be allowed to rise when occupied. Alameda commented that a wheelchair user had been injured when her chair flipped over due to the caster being on the outer barrier when it began to deploy. The agency has decided to propose a requirement in the section on interlocks (S5.11.2.7–8) to reduce the likelihood of this occurring.

Thomas Built believed that while an inner roll stop should be required, the requirement should depend entirely on the lift configuration. For instance, with its elevator lift, the inner roll stop is inherent to the lift design, so a separate stop is unnecessary. Stewart and Stephenson stated that a deployable inner roll stop (or inner barrier) should be a part of all lifts.

We believe that the new proposal, along with its associated test procedure (S6.5), is more comprehensive and representative of the real world than the NPRM. It both assures adequate strength for the roll stop and more clearly specifies a test to determine if the roll stop prevents pinching.

We have decided to propose a two part requirement (S5.5.8.3). First, to ensure an inner roll stop has adequate strength, the proposed regulation would require the inner roll stop to prevent the front wheels of a wheelchair from passing over the inboard edge of the platform when it is at ground level. This would be tested by impacting the roll stop with a wheelchair. Second, the roll stop would have to prevent pinching of the wheelchair between the platform and any other structure throughout the range of passenger operation. This would be tested by placing a wheelchair on the platform and attempting to move it toward the roll stop as the platform is raised.

We have decided to propose requiring the inner roll stop for all lifts designed for installation all vehicles over 3,220 kg (7,100 lbs) GVWR. The inner roll stop would not be required for lifts designed for vehicle under this GVW rating. However, if one were not supplied for those vehicles, the vehicle owner's manual and the operating instructions would be required to specify that when the lift is loaded at ground level, the wheelchair must face outward. Lack of an inner roll stop is consistent with the SAE standard and current lift designs on the market for personally-licensed vehicles. Due to the small size of many lifts in personally-licensed vehicles, the wheelchair must face away from the vehicle to fit on the platform. It is unlikely that wheelchair or scooter users in this orientation would be pinched between the vehicle and the platform. It is also unlikely that multiple mobility device users would use a lift in a personal vehicle. Consequently, we believe that there is no need to require the inner roll stop in this instance. Likewise, the rear wheels are unlikely to pass over the edge of the platform without first impacting the side of the vehicle due to their size. We are not proposing to exempt lifts designed for truck tractors, trailer, motor homes, or other larger vehicles typically used only by individuals from the inner roll stop requirement, because we are concerned that the rear wheels of a wheelchair could pass over the edge of the platform without first impacting the vehicle, given the distance of the vehicle's undercarriage from the ground.

(16) We request comments on whether there are any platform lifts designed for installation on vehicles under 3,220 kg (7,100 lbs) which, when used appropriately with compatible wheelchairs, allow the wheelchair occupant to be pinched between the vehicle and the lift.

h. Handrails

We have decided to propose that handrail displacement be limited to 25 mm (1 in) when a force of 445 N (100 lbs) is applied and to 102 mm (4 in) when a force of 1,112 N (250 lbs) is applied. We believe that it is more appropriate to test at two force levels than at a single force level of 445 N (100 lbs). The 445 N (100 lbs) force's purpose is to assure that the handrail is stable and has adequate clearance around it. The 1,112 N (250 lbs) force's purpose is to assure that the handrail is sufficiently strong to prevent catastrophic failure.

In the NPRM, we proposed requiring lifts to have movable handrails. The NPRM specified such characteristics as the handrails' length (203 mm (8 inches)) and a maximum allowable deflection of 3.2 mm (0.125 in) (i.e., ability to withstand a 100 pound force).[28]

Ricon commented that the requirement of a maximum handrail deflection of 3.2 mm (0.125 in) while under a load of 445 N (100 lbs) ''is not consistent with current industry practice nor is it practical in terms of the wheelchair lift design environment.'' The commenter reported measuring handrail deflections of 45 to 51 mm (1.75–2.0 in) when subjected to 334 N (75 lbs) applied load. Ricon recommended a displacement limit of 32 mm (1.25 in) with a 334 N (75 lb) applied load.

We believe Ricon's recommendation is too lenient. We agree, however, that the requirement proposed in the NPRM may have been too stringent. We believe that the allowable displacements proposed in this SNPRM are achievable goals for a well designed handrail. Handrails assist passengers in moving on and off the platform, provide a sense of security to occupants during lift operation, and help prevent lateral movement of wheelchairs. ADAAG require movable handrails for all lifts (49 CFR 38.23(b)(13)).

In evaluating handrail displacement due to applied load, we assumed a U-shaped handrail with a maximum height of 965 mm (38 in) and tube diameter of 38 mm (1.5 in). We further assumed that the handrail is made of 1010 hot-rolled steel with a wall thickness of 1.6 mm (0.0625 in). A load applied perpendicular to the vertical plane of the handrail at the top would yield the maximum displacement. We also assumed that the handrail is cantilevered or rigidly attached to the lift platform at its base. The displacement of the handrail under these conditions can be represented by equation (1), which is half of the displacement of a single cantilever beam.

Equation One: $x = (PL^3)/(6EI)$

P = Applied Load

L = Distance from base to applied load = 0.946 m (37.25 in)

E = Modulus of Elasticity of handrail material = 20×10^{10} Pa (29×10^6 psi)

I = Moment of inertia of handrail cross-section

The moment of inertia of a hollow tube is given in equation (2).

Equation Two: $I = (D^4 - d^4)\pi/64$

D = Tube outer diameter = 0.0381 m (1.5 in)

d = Tube inner diameter = 0.0349 m (1.375 in)

Substitution of values into equations (1) and (2) results in a displacement of x = 10.3 mm (0.41 in) for a 445 N (100 lb) force, an amount that exceeds the

[28] Handrail displacement consists of three parts: (1) looseness in the handrail's components at the attachment point to the platform, (2) deformation of the handrail components due to applied load, and (3) deformation of the lift platform where the handrail is attached.

NPRM's proposed limit of 3.2 mm (0.125 in).

A real-world handrail design would not be as rigid as a cantilever beam because the handrail is attached to the lift platform which would deform when loaded. It is difficult to estimate the displacement caused by deformation of the platform since it is design dependent. However, any deformation at the platform attachment point would have an even greater effect at the opposite end of the handrail. Thus, the actual displacement due to applied load could be much greater than calculated from the deformation of the handrail alone.

There are several problems with estimating displacement caused by any looseness in the handrail components at the point of attachment. Such a measurement would be both design and construction dependent as well as being affected by wear in specific components. Any looseness at the point of attachment to the lift platform would be multiplied at the distal end of the handrail.

In tentatively selecting the displacement limit for the 445 N (100 lb) force, we have assumed that the components of displacement caused by the deformation of the handrail and the deformation of the lift platform each cause 10.2 mm (0.4 in) of displacement. We further assume that the component of displacement due to looseness in the handrail contributes half as much to the total displacement. Thus, the proposed displacement limit is set to a value of x = 25 mm (1.00 in).

We took a different approach to determine the displacement limit at the 1,112 N (250 lb) force level. At this force level, it is possible that the yield strength of handrail components may be exceeded. Therefore, while it is acceptable for the handrail to permanently bend, it would be impermissible for it to break. With the yield strength of the material exceeded, equation (1) is no longer valid. The requirement for displacement must be sufficient to assure that the handrail has not fractured in a catastrophic way. The displacement for the 1112 N (250 lb) force is, therefore, set at x = 102 mm (4 in).

We note that handrails would not be required for lifts designed for vehicles other than buses and MPVs with a GVWR greater than 3,220 kg (7,100 lbs). While handrails are important in public transit where there may be standees on the lift platform, lifts in personally licensed MPVs, trucks, truck tractors, or motor homes are usually occupied each time by the same wheelchair user. Additionally, a wheelchair user may be unfamiliar with the lift on a public transit vehicle, leading to a greater risk of injury if a support mechanism is not provided. However, unfamiliarity should not be a problem with the lifts installed on personally-owned vehicles. A user who desires a handrail on the lift installed in his personal vehicle has the option of purchasing a lift equipped with one.

i. Platform Markings

NHTSA tentatively concludes that it is appropriate to require lifts on buses and MPVs with a GVWR over 3,220 kg (7,100 lbs) to be equipped with platform markings. We are proposing platform markings to provide greater visibility for the edges of the lift, thus reducing the potential for injuries. Throughout the range of operation, all platform edges, the visible edge of the vehicle floor or bridging device, and any designated standing areas would be outlined with markings at least one inch wide and of a color that contrasts with the color of the rest of the platform by 60 percent. These requirements are based on the FTA-sponsored guidelines (section 2.2.9).

In the NPRM, which proposed the same requirements (for buses fitted with lifts) without specifying the degree of color contrast, NHTSA requested comments about two alternate methods of designating the amount of contrast required. Under the first alternative, the lift would be marked with a contrasting color or shade observable with the unaided eye from 3.05 meters (10 ft). Under the second alternative, the lift would be marked with a contrasting color or shade with at least 70 percent contrast, defined as follows:

$$\text{Contrast} = 100*((L1–L2)/L1)$$

where:

L1 = luminance in footlamberts of the lighter color or shade, and

L2 = luminance in footlamberts of the darker color or shade.

While Lift-U and Iowa stated that platform marking requirements were not necessary, PVA and Braun supported such requirements. Several other commenters addressed specific aspects of the marking and illumination requirements. All American Transit stated that the designated standing area should be 305 mm to 330 mm (12–13 in) wide with a solid contrasting color band running laterally across the lift. It also stated that 15 different color patterns and contrasting color shades do not comply with NHTSA's 70 percent contrast alternative. Analytical Engineering favored the 70 percent contrast alternative, but requested clarification about whether the source of illumination was natural or artificial. Flxible stated that it uses white or yellow platform markings which meet ADA contrast criteria and that the mat area is always black. Flxible suggested allowing either footprints or a boxed perimeter area to designate the lift standing zone. Braun and Lift-U favored specifying a degree of contrast with a test procedure that would involve testing the degree of contrast in platform markings with the unaided eye from ten feet. Iowa recommended specifying a single color to keep costs low. Florida stated that the degree of contrast for platform perimeter markings should be specified and that only the perimeter should be marked. TMC stated that the degree of color contrast on the standing area of the platform should be left to the judgment of the lift manufacturer and/or transit provider.

Based on our continued belief that platforms should be marked, we are proposing the same platform marking information as in the NPRM. The agency believes marking the platform surface, as well as any roll stops and retention devices contributes to the safety of lift users because they will be able to accurately gauge the lift's perimeter both during daylight and when the lift is illuminated. One minor change to the NPRM is that rather than proposing footprints, the standing area would be outlined. NHTSA is proposing alternative number two, with a color contrast of 60 percent. We have decreased the amount of color contrast proposed in the NPRM because, based on testing at VRTC, we believe significantly more contrast combinations will be able to satisfy a contrast requirement of 60 percent and that there is no diminution of safety.

j. Platform Lighting

NHTSA tentatively concludes that it is appropriate to require lifts on buses and MPVs with a GVWR over 3,220 kg (7,100 lbs) to be equipped with lighting. We are concerned that without such lighting, a lift user could be injured in poor light conditions. We believe that the lighting from the vehicle's interior would be insufficient to illuminate the lift. Under the proposed standard, based on the FTA guidelines, the vehicle would have sufficient lighting to provide at least 54 lumens per square meter (5 lm/ft^2) of illuminance on all portions of the lift platform throughout the range of operation. At ground level, all portions of the lift's unloading ramp would be required to have at least one lumen per square foot of illuminance.

The proposed lighting requirements would apply to all lifts designed for installation on buses, including school

buses, and MPV over 3,220 kg (7,100 lbs).

In the NPRM, we decided not to propose a lighting requirement, even though the FTA-sponsored guidelines and ADAAG contained such requirements. We stated that even though lighting is an important safety feature at night time or during times of low ambient light, this may be one area that does not need to be covered by both the ADA standards and a safety standard. Any bus required to be accessible by the ADA will have illumination for the lift. We believed that the only lift-equipped vehicles which will not be subject to the ADA are school buses.

We requested comments about whether there should be a lighting requirement for school buses.

Thomas, Iowa, and PVA supported a lighting requirement for both lift operation and lift control illumination, because buses operate at night. Washington State stated that the lighting requirement should be uniform for all vehicles. In contrast, St. Paul Schools stated that lights should not be required because the light from the interior of the bus is sufficient to light the lift.

We have tentatively decided not to apply the lift lighting requirements to lifts designed for vehicles other than buses and MPVs with a GVWR of greater than 3,220 kg (7,100 lbs). The NPRM did not contemplate a distinction between lighter and heavier MPVs. However, the agency notes that the current industry standard for lifts in personally-licensed vehicles (SAE J2093) does not require lighting. Moreover, users of personally-licensed vehicle are typically familiar with the use of their lifts and in many cases the user is the operator. These individuals can have lighting installed if they believe it is necessary.

k. Platform Slip Resistance

A slip resistant platform surface is important to reduce the potential for injuries for both wheelchair and non-wheelchair lift users. The FTA-sponsored guidelines (section 2.2.2) and the ADAAG (49 CFR 38.23(b)(6)) specify that the platform surface should be slip resistant. NHTSA proposes that the lift platform surfaces have a static coefficient of friction of at least 0.65 when tested, while wet, in any direction. The test procedure for testing slip resistance is based on the ANSI/RESNA WC–13 test procedure.[29]

The coefficient of friction would be tested by wetting the platform surface in the manner prescribed in the standard. Testing would occur within 30 seconds of wetting the platform surface with distilled water.

The proposed test procedure differs completely from the one proposed in the NPRM. The previously proposed test called for the equivalent of a coefficient of friction of not less than 0.6. Instead of specifying the requirement in terms of coefficient of friction, we proposed a surrogate requirement whose satisfaction by a platform surface would be equivalent to its compliance with this coefficient of friction. We believed that the 30 degree value required under that test was consistent with the 0.6 coefficient of friction. The agency requested comments on the merits of both the test proposed and other methods of measuring surface friction.

Commenters stated that the test was too costly and cumbersome since it required testing with three separate wheelchairs and because no wheelchair could remain upright when positioned on a platform that was angled 30 degrees.

We believe that the commenters' concerns were valid since many wheelchairs will tip over at any angle greater than seventeen degrees. Since the originally proposed test was impractical, the SNPRM proposes, with some modification, an established voluntary industry standards test.

l. Platform Free Fall Limits

This proposal would limit the free fall velocity of a failing lift system to 305 mm/s (12 in/s) as the result of a single-point failure. Additionally, any single-point failure could not change the lift platform's angular orientation by more than two degrees in any direction. These two limitations would need to be met when the lift is under its own power. The requirements proposed today differ from the one in the NPRM only in the addition of a maximum allowance in the change of platform angle due to a single-point failure of the lift system.

Commenters on the NPRM had stated that they believed it was impossible to protect against multi-system failures of the lift system. NHTSA tentatively agrees with this assessment and has accordingly made the platform requirement on the change in angle applicable only to single-point system failures.

We believe that a free fall speed in excess of 305 mm/s (12 in/s) and excessive change in platform angle could result in serious injury to lift occupants. We believe the requirement is now consistent with the ADA standard which specifies that no single-point failure may cause an occupant to be dropped.

m. Control Systems

New requirements for the control panel are being proposed today. The new requirements would still require that the controls be clearly marked in English, but otherwise differ substantially from a panel similar to the one illustrated in the NPRM.

The new proposal differs significantly from the NPRM because the original proposal was deemed too design restrictive. The new proposal should allow for all types of controls on all types of lifts.

Concerns were raised in response to the NPRM that many lift operators may have a limited command of English. NHTSA recognizes this as a potential problem and considered using visual icons to explain appropriate lift use. Such symbols, however, may only complicate any potential problem since there is no universal system of icons which apply to the required lift functions. We believe that individuals with limited English can be properly trained on how to operate the lift and to recognize the few words required for the control panel.

Under this proposal, a vehicle with a platform lift system would be required to have a minimum set of switches. More switches could be provided at the discretion of the manufacturer, but those listed below would be the required minimum.

The system must have a switch which can activate the control system. This would be marked as the ''power switch''. The system would also have a switch used to move the lift from a stowed position to the vehicle floor loading position (marked either ''deploy'' or ''unfold''), a switch to lower the lift platform (marked ''down'') and to raise the lift (marked ''up''), and a switch to move the lift from the vehicle floor loading position to a stowed position (marked ''stow'' or ''fold''). The characters would be at least one inch in height to allow for easy viewing and, in buses and MPVs over 3,220 kg (7,100 lbs), would be illuminated when the vehicle's headlights are on. All functions in the control system would be required to be activated in a sequential fashion so that no two functions could be performed at the same time. The controls could be activated through the use of one or more switches. To avoid confusion, we would like to point out that a switch commonly called a ''rocker switch'' is, in fact two switches, one at either end of the rocker. Hence a rocker switch with ''up'' on one end and ''down'' on

[29] *Evaluation of ANSI/RESNA WC/13 to Determine the Coefficient of Friction of wheelchair Lift Platforms,* (July, 1996), Docket No. NHTSA–4511.

the other would meet the requirement for a switch for each of those functions.

On lifts designed for installation in buses and on MPVs over 3,200 kg (7,100 pounds), all controls would be required to be located together in an area where the lift operator has an unobstructed view of the lift and any occupants at all times. However, additional power switches could be installed in another location to protect against inadvertent activation of the lift system. The requirement that all controls be located together is proposed to address the following concerns:

- A lift operator should be able to immediately appraise all the available controls with the assurance that there are no other controls in a different location.
- A single set of controls would prevent the inadvertent operation of the platform lift by a second person.

This requirement is not proposed for MPVs under 3,200 kg and the other vehicle types typically used as personal vehicles, because these lifts must be operated by the user and hence controls for different functions must be available in different locations. For example, ''on'', ''fold'', and ''unfold'' may be located at the vehicle driver's position and/or near the lift's doorway, while ''up'' and ''down'' may need to be located on the lift itself. This presents no safety hazard to someone who is both the lift operator and its passenger and who is familiar with its operation through daily use.

Simple instructions, including instructions on how to operate the lift's back-up system, would be provided near the controls and would be in English. This requirement would not preclude a manufacturer from additionally providing instructions in a language other than English.

The agency is aware that lift systems on personally-licensed vehicles are commonly equipped with remote control systems which use fewer than four switches and have no ''power'' switch. These systems are powered at all times. We are considering exempting lifts designed for installation on vehicles other than buses and multipurpose passenger vehicles with a GVWR greater than 3,200 kg (7,100 lbs) from the control requirements, however we have several safety concerns about the controls currently available. The agency is seeking comment on those control systems to help us address those concerns.

Any single-point failure in the control system would not prevent operation of the vehicle's interlocks.

(17) NHTSA requests comments on whether there are icons for lift operation adopted by voluntary standards groups or by the lift industry.

(18) NHTSA requests comments on whether, absent industry-accepted icons, pictographs depicting proper lift operation would be helpful or practicable.

(19) NHTSA requests comments on whether commenters have experienced, or know of instances involving, inadvertent lift deployments, or other unsafe situations, which would not have occurred had the user needed to first switch on the power system?

(20) NHTSA requests comments on whether commenters have experienced, or know of instances involving, inadvertent lift deployments, or other unsafe situations, that were the result of different switches for opening doors, unfolding lift platforms, or lowering the lift platform to the ground?

(21) NHTSA requests comments on whether application of the control requirements described above, and given in S5.7 of the proposed regulatory text, would result in undue hardship to the users of lifts in private vehicles or increase the cost to manufacture the control systems for lifts in those vehicles?

n. Jacking Prevention

Jacking, or the continued effort of the lift mechanism to lower the lift platform after it has already contacted the ground, can cause serious damage to a lift system. This continued force on the ground leads to the vehicle lifting from the ground, much like a tire jack raises a vehicle. Such damage, while not harmful to the individual using the lift at the time, can result in an unsafe condition for future lift occupants. Accordingly, NHTSA proposes that the lift's control system or design prevent the raising of any portion of the vehicle by the lift system if continued force is exerted in a downward motion on a lift that is at its ground level loading position. This requirement would not apply to lift systems that are being operated in their manual back-up mode.

This proposal is unchanged from the one in the NPRM and is adopted from the FTA guidelines (section 2.5.6)

o. Backup Operation

Under this proposal, a lift system would be required to have a manually-operated backup system that allows for full use of the lift in the event of a power failure. The backup would allow for full lift use so that any occupants in the vehicle or on the lift could be safely transported off the vehicle or lift and the lift could then be stowed so that vehicle movement is not impeded. Operating instructions would be located near the control panel and in the vehicle owner's manual. This requirement, which is essentially unchanged from the one proposed in the NPRM, is consistent with the FTA guidelines (section 2.5.7) and the ADAAG (49 CFR 38.23 (b)(3), which require ''an emergency method of operation.''

p. Interlocks

Interlocks are electrical or mechanical devices which prevent the operation of a device until a particular event has occurred. The use of interlocks in a lift system is designed to prevent injury due to mechanical or human error. The interlock system proposed today consists of ten separate interlocks.

Five of these interlocks were proposed, in some form, in the NPRM and are consistent with FTA guidelines (section 2.5.8) and ADAAG (49 CFR 38.23(b)(2) and 38.23(b)(5)).

The first interlock would prevent the forward and rearward motion of the vehicle when the lift is not in its stowed position (S5.11.2.1). This is to prevent injury to a lift passenger from the vehicle's beginning to move while the lift is occupied and also to prevent injuries to passengers and bystanders and property damage that could be caused by moving the vehicle with the lift deployed. The second interlock would prevent the deployment of the lift system unless the vehicle's lift access door is open and some affirmative action has been taken to prevent the vehicle from moving (S5.11.2.2). This action may be as simple as setting the parking brake.

Two separate interlocks are proposed to prevent movement of the lift, either up or down, if the lift's inner roll stop (S5.11.2.4) or its wheelchair retention device (S5.11.2.5) is not deployed. These two requirements are designed to keep lift occupants secure during lift movement.

The lift must be incapable of stowage if any portion of the lift platform is occupied by either a portion of the lift user's body or a mobility aid (S5.11.2.3). The interlock proposed in the NPRM only prevented platform stowage when the lift was occupied by an object weighing 50 pounds or more. It did not account for very small occupants who may use the lift. A new interlock is being proposed that would prevent the stowage of a wheelchair retention device unless the lift platform is within three inches of the ground (S5.11.2.6). This interlock should prevent serious injury due to the retention device prematurely releasing a wheelchair while the lift platform is a considerable distance from the ground. The agency is not proposing to add an interlock

addressing the possible stowage of an inner roll stop. Lift manufacturers would already have to satisfy an operational test in which the inner roll stop would prevent any pinching or shearing. Additionally, we are not aware of any injuries caused by a prematurely stowing inner roll stop and, therefore, an interlock may constitute an unnecessary expense.

Two additional interlocks were added to this proposal based on comments by the Alameda-Contra Costa Transit District which reported that it knew of an incident in which a wheelchair flipped over because the outer barrier began to deploy while the wheelchair was on it, as well as on comments by AATP, Inc. The new interlock requirements would not allow the deployment of an occupied outer barrier (S5.11.2.8) or inner roll stop (S5.11.2.9).

In addition to the three new interlocks designed to prevent injuries from moving retention barriers, two new interlock requirements are being proposed in this document. First, the lift would have to stop moving once it encounters resistance while moving in a downward manner (5.11.2.7). This is to prevent potential crushing injuries and jacking and is consistent with SAE standards. Second, the lift could not move either up or down when both the vehicle floor or its bridging device and the lift is occupied (S5.2.11.10). This new interlock proposal is intended to prevent any injury from the bridging device shifting before the lift occupant is safely aboard either the vehicle or the lift.

We are not proposing at this time to quantify the amount of resistance necessary to activate the interlock that is designed to prevent jacking or crush injuries, even though NHTSA has required a quantifiable level of force not be exceeded in FMVSS No. 118 on power windows and sun roofs. Likewise, we have not proposed a specific test to measure whether a lift platform, outer barrier or inner roll stop are occupied. The agency recognizes that it will need to develop some way of measuring an unacceptable level of resistance and lift occupation as part of its compliance test procedure. However, we first seek comment on how best to measure an unacceptable threshold for resistance and occupancy.

(22) The agency seeks comment on any known injuries which have occurred due to an improperly stowing inner roll stop. In addition, the agency seeks comment on whether it should add an interlock that would prevent or limit the stowage of an inner roll stop while the lift platform is moving and the form this interlock should take.

(23) NHTSA requests comment on whether it should specify a quantifiable amount of resistance that would trigger the operation of an interlock to prevent jacking and crush injuries, and if so, what that amount should be.

(24) NHTSA requests comment on whether it should specify a means of determining if a lift platform, inner roll stop, vehicle floor, bridging device, or outer barrier are occupied, and if so, what that means should be.

(25) The agency requests comment on whether there are methods that platform lift manufacturers are using or contemplate using to determine resistance and occupancy other than force or weight detection.

q. Owner's Manual Insert

Under this proposal, the lift manufacturer would be required to provide a lift installer with an insert for the vehicle owner's manual that would contain three important pieces of information:

- A maintenance schedule, since insufficient maintenance has been identified as a safety risk to users;
- Lift usage instructions, which provide redundancy in case the instructions located near the lift are lost or damaged; and,
- For lifts designed for vehicles other than buses and MPVs over 3,220 kg (7,100 lbs), the lift's platform operating volume and whether the wheelchair user must enter the lift with the rear wheels nearest the vehicle.

This last set of instructions is to protect lift users from shearing or pinching their feet between the lift and the vehicle due to the possible lack of an inner roll stop which is not required for lifts on vehicles other than buses and MPVs greater than 3,220 kg (7,100 lbs).

r. Installation Instruction Insert

Lifts may be manufactured according to all of the proposed requirements discussed above but still be unsafe due to improper installation. NHTSA believes the lift manufacturers are in the best position to know how to properly install their lifts, as well as which vehicles are suitable for their lifts. Accordingly, we assume that each lift is delivered to the installer with printed instructions for proper installation, as well as a diagram or schematic depicting proper lift installation.

We are proposing a new requirement that lift manufacturers include with each set of installation instructions a page which specifies a list of vehicle make/models for which the lift was designed or a list of vehicle characteristics necessary for lift installation consistent with the lift manufacturer's compliance certification (*e.g.,* appropriate vehicle weight, dimensions, structural integrity), and any instructions that must be placed in the vehicle owner's manual, or elsewhere in the vehicle in order to comply with the requirements of FMVSS No. 141 once the lift is installed. Lift manufacturers may choose to include simple test procedures to assure that the lift, once installed, is fully operational and continues to meet the lift requirements of the standard.

(26) The agency requests comment on whether, and to what extent, it is common for lifts to be delivered to the installer without printed installation instructions and whether installers believe the new regulation should require lift manufacturers to include installation instructions with each lift.

4. Test Conditions and Procedures

NHTSA is proposing a series of test procedures to determine whether a lift complies with the various sections of the proposed standard. Each lift would be required to be capable of meeting all of the tests specified in the proposed standard, both separately and in the sequence specified. The point in the testing at which compliance with each requirement is to be checked is also specified. Where a range of values is specified, the equipment must be able to meet the requirements at all points within the range.

Although compliance with the proposed requirements may be tested with the lift attached to a vehicle, several of the required tests can also be performed on test jigs without the loss of rigor or an alteration in test outcome. Testing via a test jig may prove substantially cheaper than performing all tests while the lift is attached to the test vehicle. Tests that may have an effect on the vehicle/lift interface (*i.e.,* the inner roll stop, static load I, fatigue endurance, and static load II), must be performed on the lift while it is attached to the vehicle. All other tests may be performed on the test jig.

The slip resistance test, environmental resistance test, wheelchair retention impact test, handrail test, wheelchair retention overload test, and static load test III could be performed on a test jig rather than on the lift when attached to the vehicle. The attachment hardware could be replaced if damaged as a result of removing the lift from or installing the lift on the vehicle or test jig. The static load test III, which tests for ultimate load, could be performed on the test jig since the intent of the test is to over-stress the lift to determine if the design

safety factor has been met rather than to over-stress the hardware attaching the lift to the vehicle.

Static load test I is an operational test in which the lift is exercised through its full cycle of movement. The lift is required to function in both loaded (272 kg (600 lb)) and unloaded conditions.

Static load test II would require testing the lift system with a load of 816 kg (1,800 lbs) (proof load). Static load test II has a safety factor of three (*i.e.,* three times the weight requirement of static load test I) and tests the durability of the lift system and its components. The 816 kg (1,800 lb) static load test requires proof of lift operation after the test and is consistent with the applicable FTA guideline.

The proposed static load test III would require testing the entire lift system with a load of 1,088 kg (2,400 lbs) (ultimate load), which is the same as the highest load under the DVA and SAE standards. Since both the DVA standard and the SAE standard require an ultimate load of 1,088 kg (2,400 lbs) for the entire lift system, we have tentatively determined that 1,088 kg (2,400 lbs) is an appropriate weight for testing the lift system with an ultimate load. The ADAAG takes a different approach by specifying a design factor of safety of six for components likely to wear (such as cables, pulleys and shafts) and a design factor of safety of three for non-working components (like the platform, frame and attachment hardware) with a working load of 600 pounds. [30]. This requires no testing on the part of the manufacturer, but a design analysis. We are confident that a lift which meets the battery of tests proposed here would meet, or exceed, the ADAAG factor of safety requirements.

We believe our proposal, using three static tests and a fatigue test is consistent with the level of safety sought by the SAE, DVA, FTA, and ADAAG. [31]

a. Test Pallet and Load

All static load tests would be conducted using a test pallet which would mimic the size of a standard powered wheelchair. The test pallet base would measure 660 mm × 686 mm (26 in × 27 in). The test pallet for the static load test I and the fatigue endurance test (if adopted) would be made of a rectangular steel plate of uniform thickness. The load which rests on the pallet would be made of rectangular steel plates of uniform thickness with dimensions between 533 mm and 686 mm (21–27 in). This proposal varies from the NPRM in that it specifies the test pallet base rather than allowing a base within a range of dimensions.

b. Static Load Test I—Working Load

Using the control panel, the test operator would deploy the stowed platform, center a test pallet on the lift platform and center a load with a total mass of 272 kg (600 lbs) on the pallet, and lower the platform to the ground level loading position, stopping once midway through the process. The pallet would be removed from the platform and the lift cycled up, stowed, and cycled back down, stopping midway in each up or down cycle. The test pallet would then be reloaded onto the platform which would be cycled up to the vehicle floor level loading position, stopping once midway through the cycle. The pallet would be removed and the lift stowed. The operator would turn off the power supply and repeat the test manually, using the lift's manual backup mode.

The test procedure for the static load test I has not changed since the NPRM, except that more aspects of lift performance would be required to be measured under this proposal. In all, 44 specific requirements of proposed FMVSS No. 141 would be assessed using the static load test I; only six of these standard requirements are new. Unlike the NPRM, this proposal clearly specifies which requirements must be checked under static load test I.

c. Static Load Test II—Proof Load

The static load test II, which tests the lift system with a load of 816 kg (1,800 lbs), is designed to ensure that the lift/vehicle system can safely sustain loads up to three times the maximum expected load of 272 kg (600 lbs) and remain operable. The test would require a loaded pallet to be placed on the lift platform while the lift is at the vehicle floor level loading position. The load would remain on the platform for two minutes, after which it would be removed. The lift and vehicle would be examined for separation, fractures or breakage, and static load test I would be repeated. Repeating static load test I will determine whether all lift components still function.

This proposed test is the same as the static load test II in the NPRM except that the repeated static load test I was referred to as static load test III in the NPRM. This proposal specifies a different test for static load test III.

d. Static Load Test III—Ultimate Load

NHTSA has incorporated static load test III into this proposal to ensure that the lift could support the heaviest wheelchair/user combination without catastrophic failure. The lift is not required to operate at this static load. It is anticipated that a load this size is likely to cause permanent deformation to the lift/vehicle system. The test would require a test pallet and load with a mass of 1,088 kg (2,400 lbs) be placed on the lift platform. The loaded pallet would be left on the platform for two minutes and then removed. The lift would then be inspected for separation, fracture, or breakage.

This test differs from Static Load Test II, the proof test, in that the lift need not remain operable after application of this load. Static Load Test I is *not* repeated after Static Load Test III as it is with Test II.

We have included questions below about the extent to which test III adds to the safety benefits and cost of test II and how our proposed test procedures compare to the requirements of ADAAG.

(27) NHTSA requests comments about the extent to which static load test III adds safety benefits to those of static load test II.

(28) NHTSA requests comments on the estimated costs of testing based on the proposed requirements, for tests performed by or for lift manufacturers, vehicle manufacturers, and, if applicable, lift installers.

(29) NHTSA requests comments from lift manufacturers currently making ADA-compliant lifts on how they test their lift systems for compliance with 49 CFR 38.23(b)(1), and whether the level of safety required by the tests proposed here meets that required by 49 CFR 38.23(b)(1).

G. Additional Platform Lift Requirements Under Consideration

This section sets forth some additional requirements being considered by the agency for inclusion in the final rule. These proposed requirements are new and were not addressed in the NPRM. We request comment on whether, based on their costs and their safety benefits, any or all the requirements should be adopted in the final rule.

[30] 49 CFR 38.23 (b)(1)Design Load. The design load of the lift shall be at least 600 pounds. Working parts, such as cables, pulleys, and shafts, which can be expected to wear, and upon which the lift depends for support of the load, shall have a safety factor of at least six, based on the ultimate strength of the material. Nonworking parts, such as platform, frame, and attachment hardware which would not be expected to wear, shall have a safety factor of at least three, based on the ultimate strength of the material.

[31] Fatigue testing is more appropriate for identifying problems with components that wear, than a separate, higher, safety factor for these components during a static test.

We considered proposing requirements that would require lift components to meet voluntary industry standards regarding mechanical, electrical and hydraulic components.[32] Platform lifts have a variety of designs and may utilize many different types of mechanical, hydraulic, and electrical components. The FTA guidelines and SAE standards identify relevant industry standards for such components and require compliance with those standards. We believe incorporation of relevant voluntary industry standards could be design restrictive and may provide for a level of redundancy at the component level which would not add to the overall safety of the lift system. Accordingly, NHTSA has decided against proposing these component requirements.

(30) NHTSA requests comments on whether these requirements on components have sufficient safety value to merit inclusion in FMVSS No. 141.

1. Environmental Resistance

Some lifts are designed to be stowed outside the vehicle. Many of these lifts are stowed under the vehicle's undercarriage, but they may also be stowed in another manner. Accordingly, the lifts are exposed to the weather at all times. The SAE standard requires such externally mounted lifts to comply with the salt spray tests of FMVSS No. 209. Since corrosion may accelerate wear, NHTSA is proposing to adopt the SAE requirements for externally mounted lifts. Attachment hardware, whether located outside of the vehicle or within the vehicle compartment, would likewise be subject to the hardware requirements of FMVSS No. 209, which permit compliance either by passing the salt spray test or by being electroplated. These requirements are proposed as S5.4 and S6.3 of the standard.

(31) NHTSA requests comments on whether these or other environmental resistance tests merit inclusion in FMVSS No. 141.

2. Fatigue Endurance

If adopted, fatigue cycle testing would be required for all platform lifts. The testing is intended to simulate the real world use of the lift and would identify failure modes associated with wear and the fatigue fracture of components. Static testing alone is insufficient since the ability to carry a static load, even with an added factor of safety, does not always correlate with the ability to withstand the repeated application of lower level loads. With repeated loading, small flaws in lift components may increase in size and become cracks. The cracks can spread until there is insufficient material to sustain the applied load, creating the possibility of catastrophic failure. The FTA guideline requires a fatigue test in which the lift is tested through 15,600 cycles, with the first 600 cycles using 272 kg mass (600 lb load) and the remaining 15,000 cycles using 181 kg mass (400 lb load). The SAE standard requires 4,400 cycles using 272 kg mass (600 lb load), with one-half of the cycles tested with a load and one-half of the cycles tested empty. The California Highway Patrol and U-Lift support the adoption of a test similar to the one found in the FTA guidelines.

NHTSA has decided to propose incorporating these two requirements for lifts designed to be installed on buses and MPVs over 3,220 kg (7,100 lbs). We believe the form of fatigue testing in the SAE standard more closely represents actual use. However, lifts designed for buses and larger MPVs are more appropriately subjected to a larger number of cycles than those designed for other vehicles, since the lift systems for transit and paratransit vehicles will be subjected to more use than the lift system on a personally-owned vehicle. A single load level of 600 pounds is consistent with ADAAG.

Lifts designed for installation on vehicle other than buses and larger MPVs would be required to meet the SAE test. The applied load would be 272 kg (600 lbs) during half of the 15,600 up and down cycles of the fatigue testing. Half of the 15,600 cycles would be unloaded and incorporate a fold and unfold sequence. These requirements would be included as S5.6.1 and S6.7 of the proposed standard.

(32) NHTSA requests comments on whether these fatigue endurance tests merit inclusion in FMVSS No. 141.

3. Operations Counter

NHTSA is considering whether to require lift systems to have an operations counter that would record each complete up and down cycle of the lift. The counter would enable the vehicle owner to closely follow the manufacturer's maintenance schedule. Proper maintenance has been identified as a crucial factor related to lift safety. The FTA guidelines make the use of such a counter optional. These requirements would be included as S5.11, S5.12 and S5.12.2 of the standard.

(33) NHTSA requests comments on whether an operations counter should be included in FMVSS No. 141.

H. Proposed Vehicle Requirements

NHTSA is also proposing a vehicle standard, FMVSS No. 142, which would apply to new vehicles equipped with platform lifts. We are concerned that a lift that meets the proposed platform lift standard could nevertheless be unsafe if the lift were improperly installed or if the required instructions and warnings were not placed in the vehicle by the lift installer. The proposed vehicle standard would apply to all motor vehicles. Certification that a lift complies with FMVSS No. 141 is the responsibility of the platform lift manufacturer. The proposed vehicle standard does not impose any additional certification requirements. However, vehicle manufacturers, including alterers who modify a vehicle prior to sale to the vehicle's first purchaser, should be aware that under the applicable statute,[33] they will be responsible for the recall (and all associated costs) on non-compliant platform lifts. They may seek reimbursement for the cost of a recall from the lift manufacturer. Lift manufacturers would be responsible for the recall of all non-compliant lifts installed in a vehicle after first purchase.

1. Installation Requirements

Under the proposed vehicle standard, the vehicle manufacturer would have to install a platform lift in accordance with the lift manufacturer's written instructions. Since not all platform lifts are appropriate for all types of vehicles, and the proposed lift standard is less stringent for some types of vehicles, a platform lift could only be installed on a vehicle of the type identified by the lift manufacturer as appropriate for that particular lift. Likewise, the platform lift must be installed according to the installation instructions which may include operational tests to assure that the lift is properly installed and operates safely.

(34) NHTSA requests comments on whether a vehicle standard requiring compliance with a platform lift manufacturer's installation instructions will adequately ensure that platform lifts are safely installed. If not, what additional requirements are necessary?

2. Owner's Manual Insert Requirements

The vehicle manufacturer would also be required to ensure that the vehicle owner's manual inserts required by the proposed platform lift standard are

[32] *E.g.,* ANSI B1.5, ''Acme Screw Threads, 1994''; SAE EJ429, ''Mechanical & Material Requirements for Externally Threaded Fasteners'', August 1983; SAE J1292, ''Automobile, Truck, Truck Tractor, Trailer & Motor Coach Wiring'', October 1981; and SAE J517, ''Hydraulic Hose'', June 1994.

[33] 49 U.S.C. 30118.

actually placed in the vehicle owner's manual. The inserts can serve their purpose only if they are placed where a vehicle user can readily find and use them. NHTSA believes that only the vehicle manufacturer can guarantee the insert's proper placement. The items that a vehicle manufacturer would have to ensure were placed in the vehicle owner's manual under this proposed standard are (a) simple instructions regarding lift operation, including back-up operation, as specified in S5.10 of the proposed FMVSS No. 141; (b) the maintenance schedule specified in S5.12 of the proposed FMVSS No. 141; and (c) for vehicles with a GVWR less than or equal to 3,220 kg (7,100 lb), the dimensions constituting the unobstructed platform operating volume and information on whether a wheelchair user must back on to the lift platform because the lift does not have an inner roll stop.

3. Control System

NHTSA believes that only the vehicle manufacturer can ensure that the control system set forth in the proposed lift standard is installed in a manner consistent with that standard. Accordingly, we have tentatively determined that for buses and MPVs over 3,220 kg (7,100 lbs) GVWR, the vehicle manufacturer should be required to ensure that all lift operating controls be located together and in a position where the control operator has a direct, unobstructed view of the lift passenger, and any wheelchair, throughout the range of lift operation. The platform lift manufacturer would be required to provide the vehicle manufacturer with instructions regarding proper placement of the control system as part of the installation instructions.

The vehicle manufacturer would also be required to place a copy of the lift operating instructions near the controls so that all potential lift operators would have ready access to those instructions.

VI. Regulatory Analyses and Notices

Executive Order 12866 and DOT

Regulatory Policies and Procedures

Executive Order 12866, ''Regulatory Planning and Review'' (58 FR 51735, October 4, 1993), provides for making determinations whether a regulatory action is ''significant'' and therefore subject to Office of Management and Budget (OMB) review and to the requirements of the Executive Order. The Order defines a ''significant regulatory action'' as one that is likely to result in a rule that may:

(1) Have an annual effect on the economy of $100 million or more or adversely affect in a material way the economy, a sector of the economy, productivity, competition, jobs, the environment, public health or safety, or State, local, or Tribal governments or communities;

(2) Create a serious inconsistency or otherwise interfere with an action taken or planned by another agency;

(3) Materially alter the budgetary impact of entitlements, grants, user fees, or loan programs or the rights and obligations of recipients thereof; or

(4) Raise novel legal or policy issues arising out of legal mandates, the President's priorities, or the principles set forth in the Executive Order.

We have considered the impact of this rulemaking action under Executive Order 12866 and the Department of Transportation's regulatory policies and procedures. This rulemaking document was reviewed by the Office of Management and Budget under E.O. 12866, ''Regulatory Planning and Review.'' This action has been determined to be ''significant'' under the Department of Transportation's regulatory policies and procedures because of the level of public interest in the rulemaking.

However, this action would not be economically significant. The agency estimates that between 8,288 and 10,425 buses and MPVs larger than 3,220 kg (7,100 lbs) would be subject to the proposed standards, either directly or indirectly, annually. We believe the average cost of a new lift, excluding the cost of installation, is approximately $5000. This rulemaking would add approximately $291 to the cost of each lift system of the type design for larger vehicles. The cost of upgrade per lift would be approximately $280, and the cost of certification per lift would be approximately $11.

For lifts designed for installation on MPVs under 3,220 kg (7,100 lbs), trucks, truck tractors, and motor homes, and any other motor vehicles we believe that between 8,800 and 17,000 lifts per year would be required to comply with the proposed platform lift standard. This rulemaking would add approximately $268 to the cost of each lift system. The cost of upgrade per lift would be approximately $255, and the cost of certification per lift would be approximately $13.

The figures given for upgrade costs are relatively low because we anticipate that most lift manufacturers are already complying with the existing voluntary and Federal standards. The proposed vehicle standard would impose no additional upgrade costs on the vehicle manufacturers, although operational testing may impose some additional costs. NHTSA anticipates that those tests would be relatively simple (e.g., does the threshold warning work, is there an excessive gap between the lift and the vehicle) and, therefore, a nominal additional cost.

Regulatory Flexibility Act

Pursuant to the Regulatory Flexibility Act (5 U.S.C. 601 *et seq.*, as amended by the Small Business Regulatory Enforcement Fairness Act (SBREFA) of 1996) whenever an agency is required to publish a notice of rulemaking for any proposed or final rule, it must prepare and make available for public comment a regulatory flexibility analysis that describes the effect of the rule on small entities (i.e., small businesses, small organizations, and small governmental jurisdictions). However, no regulatory flexibility analysis is required if the head of an agency certifies the rule will not have a significant economic impact on a substantial number of small entities. SBREFA amended the Regulatory Flexibility Act to require Federal agencies to provide a statement of the factual basis for certifying that a rule will not have a significant economic impact on a substantial number of small entities.

The businesses and organizations likely to be affected by a rulemaking concerning this rulemaking are:

- Transit, paratransit, intercity, and school bus manufacturers (SB),
- Life manufacturers (SB),
- Public/private transit and paratransit bus owners and operators (e.g., municipal transit authorities) (SO/SB),
- Public/private and city/county school bus operators (SB/SO/SGJ),
- School bus manufacturers that make/sell their own lift equipment (SB), and
- Dealers and distributors of school buses (SB).

We have prepared a regulatory flexibility analysis (RFA) which is contained in the Preliminary Regulatory Evaluation (PRE). The PRE is entered in the docket. Based on this analysis, we have tentatively concluded that the proposed rule will not have a significant economic impact on a substantial number of small entities.

Executive Order 13132

We have analyzed this proposal in accordance with Executive Order 13132 (''Federalism''). We have determined that this proposal may have federalism implications. Many states and local transit authorities already have their own minimum lift performance

requirements for transit, paratransit, intercity and school buses in order to safely accommodate persons with disabilities. However, our initial determination is that the federalism implications are not sufficiently defined at this time to warrant preparation of a Federalism consultation. It should be noted that, regardless of that determination, the we find that the objective of the proposed rulemaking, establishing minimum performance requirements for transit, paratransit, intercity, school bus and personal transport lifts, requires action that can only be implemented effectively at the national level.

Executive Order 13045

Executive Order 13045 (62 FR 19885, April 23, 1997) applies to any rule that: (1) is determined to be ''economically significant'' as defined under E.O. 12866, and (2) concerns an environmental, health or safety risk that NHTSA has reason to believe may have a disproportionate effect on children. If the regulatory action meets both criteria, we must evaluate the environmental health or safety effects of the planned rule on children, and explain why the planned regulation is preferable to other potentially effective and reasonably feasible alternatives considered by us.

This rule is not subject to the Executive Order because it is not economically significant as defined in E.O. 12866. Nor does it involve decisions based on health risks that disproportionately affect children.

Executive Order 12778

Pursuant to Executive Order 12778, ''Civil Justice Reform,'' we have considered whether this proposed rule would have any retroactive effect. We conclude that it would not have such effect. Under 49 U.S.C. 30103, whenever a Federal motor vehicle safety standard is in effect, a State may not adopt or maintain a safety standard applicable to the same aspect of performance which is not identical to the Federal standard, except to the extent that the state requirement imposes a higher level of performance and applies only to vehicles procured for the State's use. 49 U.S.C. 30161 sets forth a procedure for judicial review of final rules establishing, amending or revoking Federal motor vehicle safety standards. That section does not require submission of a petition for reconsideration or other administrative proceedings before parties may file suit in court.

National Environmental Policy Act

We have analyzed this proposed amendment for the purposes of the National Environmental Policy Act and determined that it would not have any significant impact on the quality of the human environment.

Paperwork Reduction Act

Under the Paperwork Reduction Act of 1995, a person is not required to respond to a collection of information by a Federal agency unless the collection displays a valid OMB control number. This proposal proposes new information collection requirements in that both new regulations would require certain disclosures to third parties. These requirements and our estimates of the burden to lift and vehicle manufacturers are given below. There is no burden to the general public.

- Estimated burden to lift manufacturers to produce an insert for the vehicle owner's manual stating the lift's platform operating volume, maintenance schedule, and instructions regarding the lift operating procedures: 10 manufacturers × 24 hrs amortized over 5 yrs = 48 hrs per year.
- Estimated burden to lift manufacturers to produce an insert for the lift installation instructions identifying the vehicles on which the lift is designed to be installed: 10 manufacturers × 24 hrs amortized over 5 yrs = 48 hrs per year.
- Estimated burden to lift manufacturers to produce two labels for operating and backup lift operation:

10 manufacturers × 24 hrs amortized over 5 yrs = 48 hrs per year
Total estimated burden = 144 hrs per year

- Cost to lift manufacturers to produce:

Label for operating instructions: 27,398 lifts × $0.13 per label = $3,561.74
Label for backup operations: 27,398 lifts × $0.13 per label = $3,561.74
Owner's manual insert: 27,398 lifts × $0.04 per page × 1 page = $1,095.92
Installation instruction insert: 27,398 lifts × $0.04 per page × 1 page = $1,095.92
Total annual cost = $9,315.32

Organizations and individuals desiring to submit comments on the information collection requirements should direct them to the Office of Information and Regulatory Affairs, OMB, Room 10235, New Executive Office Building, Washington, DC 20503; Attention Desk Officer for National Highway Traffic Safety Administration.

NHTSA will consider comments by the public on this proposed collection of information in evaluating:

- Whether the proposed collection of information is necessary for the safety of lift users,
- The accuracy of the agency's estimate of the burden of the proposed collection of information,
- The quality, utility, and clarity of the information to be collected, and
- The opportunities to minimize the information collection burden.

OMB is required to make a decision concerning the collection of information contained in this proposal between 30 and 60 days after publication of this notice in the **Federal Register**. Therefore, a comment to OMB is best assured of having its full effect if OMB receives it within 30 days of the publication of this proposal. This does not affect the deadline for public comment to the National Highway Traffic Safety Administration on the merits of the proposed regulations.

National Technology Transfer and Advancement Act

Section 12(d) of the National Technology Transfer and Advancement Act (NTTAA) requires NHTSA to evaluate and use existing voluntary consensus standards [34] in its regulatory activities unless doing so would be inconsistent with applicable law (*e.g.,* the statutory provisions regarding NHTSA's vehicle safety authority) or otherwise impractical. In meeting that requirement, we are required to consult with voluntary, private sector, consensus standards bodies. Examples of organizations generally regarded as voluntary consensus standards bodies include the American Society for Testing and Materials (ASTM), the Society of Automotive Engineers (SAE), and the American National Standards Institute (ANSI). If NHTSA does not use available and potentially applicable voluntary consensus standards, we are required by the Act to provide Congress, through OMB, an explanation of the reasons for not using such standards.

We have considered and, to the extent consistent with our statutory obligations, proposed several voluntary standards and guidelines as part of this rulemaking. A full description of the agency's actions in this regard can be found elsewhere in this document under section V. C ''Harmonization with Governmental and Industry Standards''

[34] Voluntary consensus standards are technical standards developed or adopted by voluntary consensus standards bodies. Technical standards are defined by the NTTAA as ''performance-based or design-specific technical specifications and related management systems practices.'' They pertain to ''products and processes, such as size, strength, or technical performance of a product, process or material.''

as well as throughout the discussion on the specific requirements proposed today.

Unfunded Mandates Reform Act

Section 202 of the Unfunded Mandates Reform Act of 1995 (UMRA) requires Federal agencies to prepare a written assessment of the costs, benefits and other effects of proposed or final rules that include a Federal mandate likely to result in the expenditure by State, local or tribal governments, in the aggregate, or by the private sector, of more than $100 million in any one year (adjusted for inflation with base year of 1995). Before promulgating a NHTSA rule for which a written statement is needed, section 205 of the UMRA generally requires us to identify and consider a reasonable number of regulatory alternatives and adopt the least costly, most cost-effective or least burdensome alternative that achieves the objectives of the rule. The provisions of section 205 do not apply when they are inconsistent with applicable law. Moreover, section 205 allows us to adopt an alternative other than the least costly, most cost-effective or least burdensome alternative if we publish with the final rule an explanation why that alternative was not adopted.

This proposal does not propose to impose any unfunded mandates under the Unfunded Mandates Reform Act of 1995. This proposal does not meet the definition of a Federal mandate because it would not result in costs of $100 million or more to either State, local, or tribal governments, in the aggregate, or to the private sector. We anticipate that the total cost of this rule, if issued, would be between eight and ten million dollars, well below the $100 million threshold of the Unfunded Mandates Reform Act. Thus, this proposal is not subject to the requirements of sections 202 and 205 of the UMRA.

Regulation Identifier Number (RIN)

The Department of Transportation assigns a regulation identifier number (RIN) to each regulatory action listed in the Unified Agenda of Federal Regulations. The Regulatory Information Service Center publishes the Unified Agenda in April and October of each year. You may use the RIN contained in the heading at the beginning of this document to find this action in the Unified Agenda.

VII. Comments

How Do I Prepare and Submit Comments?

Your comments must be written and in English. To ensure that your comments are correctly filed in the Docket, please include the docket number of this document in your comments.

Your comments must not be more than 15 pages long. (49 CFR 553.21). We established this limit to encourage you to write your primary comments in a concise fashion. However, you may attach necessary additional documents to your comments. There is no limit on the length of the attachments.

Please submit two copies of your comments, including the attachments, to Docket Management at the address given above under ADDRESS.

How Can I Be Sure That My Comments Were Received?

If you wish Docket Management to notify you upon its receipt of your comments, enclose a self-addressed, stamped postcard in the envelope containing your comments. Upon receiving your comments, Docket Management will return the postcard by mail.

How Do I Submit Confidential Business Information?

If you wish to submit any information under a claim of confidentiality, you should submit three copies of your complete submission, including the information you claim to be confidential business information, to the Chief Counsel, NHTSA, at the address given above under **FOR FURTHER INFORMATION CONTACT**. In addition, you should submit two copies, from which you have deleted the claimed confidential business information, to Docket Management at the address given above under ADDRESS. When you send a comment containing information claimed to be confidential business information, you should include a cover letter setting forth the information specified in our confidential business information regulation. (49 CFR part 512.)

Will the Agency Consider Late Comments?

We will consider all comments that Docket Management receives before the close of business on the comment closing date indicated above under DATES. To the extent possible, we will also consider comments that Docket Management receives after that date. If Docket Management receives a comment too late for us to consider it in developing a final rule (assuming that one is issued), we will consider that comment as an informal suggestion for future rulemaking action.

How Can I Read the Comments Submitted by Other People?

You may read the comments received by Docket Management at the address given above under **ADDRESS.** The hours of the Docket are indicated above in the same location.

You may also see the comments on the Internet. To read the comments on the Internet, take the following steps:

1. Go to the Docket Management System (DMS) Web page of the Department of Transportation (http://dms.dot.gov/).
2. On that page, click on ''search.''
3. On the next page (http://dms.dot.gov/search/), type in the four-digit docket number shown at the beginning of this document. Example: If the docket number were ''NHTSA–1998–1234,'' you would type ''1234.'' After typing the docket number, click on ''search.''
4. On the next page, which contains docket summary information for the docket you selected, click on the desired comments. You may download the comments.

Please note that even after the comment closing date, we will continue to file relevant information in the Docket as it becomes available. Further, some people may submit late comments. Accordingly, we recommend that you periodically check the Docket for new material.

List of Subjects in 49 CFR Part 571

Imports, Motor vehicle safety, Motor vehicles, Rubber and rubber products, Tires.

In consideration of the foregoing, it is proposed that 49 CFR part 571 be amended as follows:

PART 571—FEDERAL MOTOR VEHICLE SAFETY STANDARDS

1. The authority citation for part 571 of title 49 would continue to read as follows:

Authority: 49 U.S.C. 322, 30111, 30115, 30117, 30166 delegation of authority at 49 CFR 1.50.

2. Section 571.3 would be amended by adding a definition of ''motor home'' to § 571.3(b) as follows:

§ 571.3 Definitions.

* * * * *

(b) *Other definitions.* As used in this chapter—

* * * * *

Motor home means a motor vehicle with motive power that is designed to

provide temporary residential accommodations, as evidenced by the presence of at least four of the following facilities: Cooking; refrigeration or ice box; self-contained toilet; heating and/or air conditioning; a potable water supply system including a faucet and a sink; and a separate 110–125 volt electrical power supply and/or an LP gas supply.

* * * * *

§ 571.105 [Amended]

3. Section 571.105 would be amended by removing the definition of ''motor home'' contained in § 571.105 S4., Definitions.

4. Section 571.141 would be added to read as follows:

§ 571.141 Standard No. 141; Platform lift systems for motor vehicles.

S1. *Scope.* This standard specifies requirements for platform lifts used to assist persons with limited mobility in entering or leaving a vehicle.

S2. *Purpose.* The purpose of this standard is to prevent injuries and fatalities to passengers and bystanders during the operation of platform lifts installed in motor vehicles.

S3. *Application.* This standard applies to platform lifts designed to carry passengers into and out of motor vehicles.

S4. *Definitions.*

Bridging device means that portion of a platform lift which provides a transitional surface between the lift platform and vehicle floor.

Cycle means deploying a platform lift from a stowed position, lowering the lift to the ground level loading position, raising the lift to the vehicle floor level loading position, and stowing the lift. The term includes operation of any wheelchair retention device, bridging device, and inner roll stop.

Deploy means with respect to a platform lift, its movement from a stowed position to a vehicle floor level loading position. With respect to a wheelchair retention device or inner roll stop, the term means the movement of the device or stop to a fully functional position intended to prevent a passenger from disembarking the lift platform or being pinched between the platform and vehicle.

Floor reference plane means the plane nominally perpendicular to the longitudinal vehicle reference plane for platform lifts that deploy from the side of the vehicle or perpendicular to the transverse vehicle reference plane for lifts that deploy from the rear of the vehicle, and tangent to the outermost edge of the vehicle floor surface adjacent to the lift platform. (See figure 1.)

Gap means a discontinuity in a plane surface, or between two adjacent surfaces.

Lift reference plane means the nominally vertical plane that is defined by two orthogonal axes passing through the geometric center of the lift platform surface. One axis is perpendicular to the platform reference plane and the other is parallel to the direction of wheelchair travel during loading of the lift. (See figure 1.)

Loading position means, with respect to a platform lift, a position at which a passenger can either embark or disembark a lift. The two loading positions are at vehicle floor and ground level.

Longitudinal vehicle reference plane means the nominally vertical longitudinal plane that contains the longitudinal axis of the vehicle and that moves along with the vehicle body in response to the loading of the vehicle suspension. (See figure 1.)

Platform lift means a level change device, including any integration of existing vehicle components, and excluding a ramp, used to assist persons with limited mobility in entering or leaving a vehicle.

Platform reference plane means a plane tangent to the platform surface at its geometric center. (See figure 1.)

Platform surface means the passenger carrying surface of the lift platform.

Platform threshold area means the rectangular area of the vehicle floor defined by moving a line that lies on the portion of the edge of the vehicle floor directly adjacent to the lift platform, through a distance of 457 mm (18 inches) across the vehicle floor in a direction perpendicular to the edge. Any portion of a bridging device which lies on this area must be considered part of that area.

Range of passenger operation means the portion of the lift cycle during which the platform is at or between the ground and vehicle level loading positions.

Stow means with respect to a platform lift, its movement from a vehicle floor level loading position to the position maintained during normal vehicle travel; and, with respect to a wheelchair retention device, bridging device, or inner roll stop, its movement from a fully functional position to a position intended to allow a passenger to embark or disembark the lift platform.

Test pallet means a platform on which required test loads are placed for handling and moving.

Transverse vehicle reference plane means the nominally vertical transverse plane that contains the transverse axis of the vehicle and that moves along with the vehicle body in response to the loading of the vehicle suspension. (See figure 1.)

Wheelchair means a wheeled seating system for the support and conveyance of a person with physical disabilities, comprised of at least a frame, a seat, and wheels.

S5. *Requirements.* Each platform lift manufactured for installation on a motor vehicle must meet the applicable requirements in this section. Where a range of values is specified, the equipment must be able to meet the requirements at all points within the range. The test procedures in S6 will be used to determine compliance with all requirements, except S5.3, S5.7, S5.8.9 and S5.13. Compliance with those paragraphs will be determined through inspection and/or analysis.

S5.1 *Threshold warning signal.*

S5.1.1 Except when the platform lift is operated manually in backup mode as required by S5.10, the lift must meet the requirements of S5.1.2 during the lift operation specified in S6.6.

S5.1.2 Except for platform lifts where platform loading takes place wholly over the vehicle floor, a visual or audible warning must activate if the platform is more than 25 mm (1 inch) below the floor reference plane and any portion of a passenger's body or mobility aid is on the platform threshold area.

S5.1.2.1 For platform lifts designed for installation on buses and multipurpose passenger vehicles with a GVWR greater than 3,220 kg (7,100 lbs), the threshold warning signal must have both a visual and an audible component.

S5.1.2.2 The visual warning required by S5.1.2 must be a flashing red beacon having a minimum of 20 candela and provision must be made for the beacon to be installed such that it can be seen by a passenger backing onto the platform lift from the interior of the vehicle.

S5.1.2.3 The audible warning required by S5.1.2 must be a minimum of 85 dBA between 500 and 3000 Hz.

S5.1.2.4 The intensity of the visual or audible warnings required by S5.1.2 must be measured at the location 914 mm (3 ft) above the center of the platform threshold area. (See figure 3.)

S5.2 *Platform lift operational requirements.*

S5.2.1 The platform lift must meet the requirements of S5.2.2 through S5.2.4, during the lift operations specified in S6.6. These requirements must be satisfied both with and without a 272 kg mass (600 lb load) on the lift platform, except for S5.2.2.2. S5.2.2.2 must be satisfied without any load.

S5.2.2 *Maximum platform velocity.*

S5.2.2.1 Throughout the range of passenger operation, neither the vertical nor the horizontal velocity of the platform must be greater than 152 mm (6 inches) per second.

S5.2.2.2 During the stow and deploy operations, neither the vertical nor horizontal velocity of the platform must be greater than 305 mm (12 inches) per second.

S5.2.3 *Maximum platform acceleration.* Throughout the range of passenger operation, neither the horizontal nor vertical acceleration of the platform must exceed 0.3 g, after the accelerometer output is filtered with a channel frequency class (CFC) 3 filter. The filter must meet the requirements of SAE J211 with F_H = 3 Hz and F_N = 5 Hz. The accelerometer is to be located at the geometric center of the platform and must be mounted directly on the platform when it is unloaded and on the 272 kg mass (600 lb load) specified in S6.1 when the platform is loaded.

S5.2.4 *Maximum noise level.* Except as provided in S5.1.2 and S5.1.4, the noise level of the platform lift may not exceed 80 dB as measured at any lift operator's position designated by the platform lift manufacturer for the intended vehicle and in the area on the lift defined in S5.5.2.2 and 5.5.2.3, during the range of passenger operation.

S5.3 *Environmental resistance.*

S5.3.1 *Attachment hardware.* Attachment hardware of a platform lift, after being subjected to the conditions specified in S6.3, must be free of ferrous corrosion on significant surfaces except for permissible ferrous corrosion, as defined in FMVSS No. 209, at peripheral surface edges or edges of holes on underfloor reinforcing plates and washers. Alternatively, such hardware at or near the vehicle floor must be protected against corrosion by an electrodeposited coating of nickel, or copper and nickel with at least a service condition number of SC2, and other attachment hardware must be protected by an electrodeposited coating of nickel, or copper and nickel with a service condition number of SC1, in accordance with American Society for Testing and Materials B456–94, ''Standard Specification for Electrodeposited Coatings of Copper Plus Nickel Plus Chromium and Nickel Plus Chromium,'' but such hardware may not be racked for electroplating in locations subjected to maximum stress.

S5.3.2 *Externally mounted platform lifts.* A platform lift or its components, which are not located in the occupant compartment of the motor vehicle when the lift is in a stowed position, after being subjected to the conditions specified in S6.3, must be free of ferrous corrosion on significant surfaces except for permissible ferrous corrosion, as defined in FMVSS No. 209, at peripheral surface edges and edges of holes and continue to function properly.

S5.4 *Platform requirements.*

S5.4.1 During the platform lift operations specified in S6.6, the vehicle must meet the requirements of S5.4.2 through S5.4.6, S5.4.7.4, S5.4.9.2 through S5.4.9.5, S5.4.10 and S5.4.11, both with and without a 272 kg mass (600 lb load) on the platform.

S5.4.2 *Unobstructed platform operating volume.*

S5.4.2.1 Except as provided in S5.4.3, no portion of the platform lift must intersect the platform operating volume as specified in S5.4.2.2 and S5.4.2.3 throughout the range of passenger operation.

S5.4.2.2 For platform lifts designed for installation on buses and multipurpose passenger vehicles with a GVWR greater than 3,220 kg (7,100 lbs), the platform operating volume is the sum of an upper part and a lower part. The lower part is a rectangular solid whose base is 724 mm (28.5 inches) wide by the length of the platform surface, whose height is 51 mm (2 inches), and which is resting on the platform surface with each side of the base parallel with the nearest side of the platform surface. The width is perpendicular to the lift reference plane and the length is parallel to the lift reference plane (See Figure 2). The upper part is a rectangular solid whose base is 762 mm (30 inches) by 1,219 mm (48 inches), whose height is 711 mm (28 inches), whose base is tangent to the top surface of the lower rectangular solid, and whose vertical centroidal axis coincides with that of the lower rectangular solid.

S5.4.2.3 For platform lifts designed for installation on vehicles other than buses and multipurpose passenger vehicles with a GVWR greater than 3,220 kg (7,100 lbs), the platform operating volume is as specified in the vehicle owner's manual.

S5.4.3 *Platform surface protrusions.*

S5.4.3.1 For platform lifts designed for installation on buses and multipurpose passenger vehicles with a GVWR greater than 3,220 kg (7,100 lbs), except as required for deployment of the wheelchair retention device and inner roll stop, throughout the range of passenger operation, the platform surface may have no protrusions which rise more than 6.5 mm (0.25 inches) above the platform surface, measured perpendicular to the platform surface by a device with its base centered between 50 mm (1.97 inches) and 100mm (3.94 inches) from the protrusion. The base of the protrusion measurement device shall have a cross-section not less than 25mm (0.98 inches) and not more than 50 mm (1.97 inches).

S5.4.3.2 For platform lifts designed for installation vehicles other than buses and multipurpose passenger vehicles with a GVWR greater than 3,220 kg (7,100 lbs), except as required for deployment of the wheelchair retention device and inner roll stop, throughout the range of passenger operation, the platform surface may have no protrusions which rise more than 13 mm (0.50 inches) above the platform surface, measured perpendicular to the platform surface by a device with its base centered between 50 mm (1.97 inches) and 100mm (3.94 inches) from the protrusion. All portions of the sides of a protrusion that are between 6.5 mm (0.25 inches) and 13 mm (0.50 inches) above the platform must have a slope not greater than 1:2, measured with respect to the platform surface at the location of the protrusion. The base of the protrusion measurement device shall have a cross-section not less than 25mm (0.98 inches) and not more than 50 mm (1.97 inches).

S5.4.4 *Gaps, transitions and openings.*

S5.4.4.1 When the platform lift is at the ground level loading position, any vertical surface transition measured perpendicular to the ground over which a passenger may traverse to enter or exit the platform, may be not greater than 6.5 mm (0.25 inches). When the lift is at the vehicle level loading position, any vertical surface transition measured perpendicular to the floor reference plane over which a passenger may traverse to enter or exit the platform, may be not greater than 6.5 mm (0.25 inches).

S5.4.4.2 When the platform lift is at the ground or vehicle level loading position, the slope of any surface over which a passenger must traverse to enter or exit the platform must have a rise to run not greater than 1:2 on the portion of the rise between 6.5 mm (0.25 inches) and 13 mm (0.5 inches), and 1:8 on the portion of the rise between 13 mm (0.5 inches) and 76 mm (3.0 inches). The rise of any sloped surface may not be greater than 76 mm (3.0 inches). When the lift is at the ground level loading position, measurements must be made perpendicular to the ground. When the lift is at the vehicle level loading position, measurements must be made perpendicular to the floor reference plane.

S5.4.4.3 When the inner roll stop or any outer barrier is deployed, any gap between the inner roll stop and lift

platform and any gap between the outer barrier and lift platform must prevent passage of the clearance test block when its long axis is held perpendicular to the platform reference plane. The clearance test block is made of a rigid material and is 15.9 × 15.9 × 102 mm (0.625 × 0.625 × 4.0 inches) with all corners having a 1.6 mm (0.0625 inch) radius.

S5.4.4.4 When the lift platform is at the ground or vehicle level loading position, any horizontal gap over which a passenger must traverse to enter or exit the platform must prevent passage of a 13 mm (0.5 inch) diameter sphere.

S5.4.4.5 Throughout the range of passenger operation, any opening in the platform surface must prevent passage of a 19 mm (0.75 inch) diameter sphere.

S5.4.4.6 Throughout the range of passenger operation, any gap between the platform sides and edge guards which move with the platform must prevent passage of a 13 mm (0.5 inch) diameter sphere. Where structures fixed to the vehicle are used as edge guards, the horizontal gap between the platform side and vehicle structure must prevent passage of a 6.5 mm (0.25 inch) diameter sphere.

S5.4.5 *Platform deflection.* Throughout the range of passenger operation, the angle of the stationary lift platform relative to the vehicle, may not be more than 1 degree with no load on the platform and may not be more than 3 degrees with a 272 kg mass (600 lb load) on the platform. The angle must be measured between axes perpendicular to the floor and platform reference planes.

S5.4.6 *Edge guards.*

S5.4.6.1 The platform lift must have edge guards which extend continuously along each side of the lift platform parallel to the direction of wheelchair movement during loading and unloading.

S5.4.6.2 Edge guards which move with the platform must have vertical sides facing the platform surface and have a minimum height of 38 mm (1.5 inches), measured vertically from the platform surface.

S5.4.6.3 *Deployment.* Except whenever any part of the platform surface is below a horizontal plane 76 mm (3 in) above the ground, the edge guard must be deployed throughout the range of passenger operation.

S5.4.7 *Wheelchair retention.*

S5.4.7.1 *Impact I.* Except for platform lifts designed so that platform loading takes place wholly over the vehicle floor, the lift must have a means of retaining the test device specified in S6.4.2 upright with all of its wheels on the platform surface, vehicle floor, bridging device or on a combination of the platform surface, vehicle floor, and bridging device, throughout its range of passenger operation, except as provided in S5.4.7.4. The lift will be tested in accordance with S6.4.3 to determine compliance with this section.

S5.4.7.2 *Impact II.* For platform lifts designed so that platform loading takes place wholly over the vehicle floor, the lift must have means of retaining the test device specified in S6.4.2 upright with all of its wheels on the platform surface, throughout the range of passenger operation, except as provided in S5.4.7.4. The lift will be tested in accordance with S6.4.4 to determine compliance with this section.

S5.4.7.3 *Overload.* The deployed wheelchair retention device(s) must be capable of sustaining 7,117 N (1,600 lb force) when tested in accordance with S6.10. No separation, fracture, or breakage of the wheelchair retention device may occur as a result of conducting the test in S6.10.

S5.4.7.4 *Deployment.* Except whenever any part of the platform surface is below a horizontal plane 76 mm (3 inches) above the ground, the wheelchair retention device(s) must be deployed throughout the range of passenger operation.

S5.4.8 *Inner roll stop.*

S5.4.8.1 Platform lifts designed for installation on vehicles with a GVWR greater than 3,220 kg (7,100 lbs) must have an inner roll stop that meets the requirements of S5.4.8.3.

S5.4.8.2 Platform lifts designed for installation on vehicles with a GVWR less than or equal to 3,220 kg (7,100 lbs) must:

(a) Have an inner roll stop that meets the requirements of S5.4.8.3; or

(b) have operating instructions near the lift controls and in the vehicle owner's manual, as specified in S5.7.6 and S5.12.3, that contain a warning that wheelchairs should back onto the platform when entering from the ground.

S5.4.8.3 When tested in accordance with S6.5, platform lifts with a ground level loading direction towards the vehicle, must have an inner roll stop that provides a means that prevents:

(a) The front wheels of the test device specified in S6.4.2 from passing over the edge of the platform where the roll stop is located, when the lift is at the ground level loading position; and

(b) any portion of the test device specified in S6.4.2 from being contacted simultaneously with a portion of the lift platform and any other structure, throughout the lift's range of passenger operation.

S5.4.9 *Handrails.*

S5.4.9.1 For platform lifts designed for installation on buses and multipurpose passenger vehicles with a GVWR greater than 3,220 kg (7,100 lbs), throughout the range of passenger operation, there must be a handrail located on each side of the lift that meets the requirements of S5.4.9.2 through S5.4.9.8. For lifts designed for installation on vehicles other than buses and multipurpose passenger vehicles with a GVWR greater than 3,220 kg (7,100 lbs) and equipped with handrails, the handrails must meet the requirement of S5.4.9.2 through 5.4.9.8, throughout the range of passenger operation.

S5.4.9.2 The graspable portion of each handrail may be not less than 762 mm (30 inches) and not more than 965 mm (38 inches) above the platform surface, measured vertically.

S5.4.9.3 The cross section of the graspable portion of each handrail may be not less than 31.5 mm (1.25 inches) and not more than 38 mm (1.5 inches) in diameter or width, and may have not less than a 3.2 mm (0.125 inch) radii on any corner.

S5.4.9.4 The vertical projection of the graspable portion of each handrail must intersect two vertical planes that are perpendicular to the direction of travel of a wheelchair on the lift when entering or exiting the platform, and are 203 mm (8 inches) apart.

S5.4.9.5 Throughout the range of passenger operation, the handrails must move such that the position of the handrails relative to the platform surface does not change.

S5.4.9.6 When tested in accordance with S6.9.1, each handrail must withstand 445 N (100 pounds force) applied at any point and in any direction on the handrail without more than 25 mm (1.00 inches) of displacement relative to the platform surface. After removal of the load, the handrail must exhibit no permanent deformation.

S5.4.9.7 When tested in accordance with S6.9.1, there must be at least 38 mm (1.5 inches) of clearance between each handrail and any portion of the vehicle, throughout the range of passenger operation.

S5.4.9.8 When tested in accordance with S6.9.2, each handrail must withstand 1,112 N (250 pounds force) applied at any point and in any direction on the handrail without sustaining any failure, such as cracking, separation, fracture, or more than 102 mm (4 inches) of displacement of any point on the handrails relative to the platform surface.

S5.4.10 *Platform Markings.* For platform lifts designed for installation

on buses and multipurpose passenger vehicles with a GVWR greater than 3,220 kg (7,100 lbs), throughout the range of passenger operation, all edges of the platform surface, the visible edge of the vehicle floor or bridging device adjacent to the platform lift, and any designated standing area must be outlined. The outlines must be at least 25 mm (1 inch) wide and of a color that contrasts with its background by 60 percent, determined according to the following equation:

$$\text{Contrast} = 100 \times [(L1 - L2)/L1]$$

where:

L1 = luminance of the lighter color or shade, and

L2 = luminance of the darker color or shade.

L1 and L2 are measured perpendicular to the platform surface with illumination provided by a diffuse light and a resulting illuminance of the platform surface of 323 lm/m² (30 lumen/sqft).

S5.4.11 *Platform lighting.* Platform lifts designed for installation on buses and multipurpose passenger vehicles with a GVWR greater than 3,220 kg (7,100 lbs) must have a light or a set of lights which provides at least 54 lm/m² (5 lumen/sqft) of illuminance on all portions of the surface of the lift platform, throughout the range of passenger operation. The illuminance measured on all portions of the surface of a passenger unloading ramp at ground level must be at least 11 lm/m² (1 lumen/sqft).

S5.4.12 *Platform slip resistance.* When tested in accordance with S6.2, the coefficient of friction, in any direction, of any part of a wet platform surface may be not less than 0.65.

S5.5 *Structural integrity.*

S5.5.1 *Fatigue endurance.* Platform lifts designed for installation on buses and MPVs with a GVWR greater than 3,220 kg (7,100 lbs.) must be operated through 15,600 cycles as specified in S6.7. Lifts designed for installation on vehicles other than buses and multipurpose vehicles with a GVWR over 3,220 kg (7,100 lbs) must be operated through 4,400 cycles as specified in S6.7. No separation, fracture, or breakage of any vehicle or lift component may occur as a result of conducting the fatigue test in S6.7.

S5.5.2 *Proof load.* The platform lift must be capable of holding an 816 kg mass (1,800 lb load), as specified in S6.8, without separation, fracture, or breakage of any vehicle or lift component. After the test, the lift must pass Static Load Test I, see S6.6.

S5.5.3 *Ultimate Load.* The platform lift must be capable of holding a 1,088 kg mass (2,400 lb load), as specified in S6.11, without separation, fracture, or breakage of the platform, supporting structure, or lifting mechanism.

S5.6 *Platform Free Fall Limits.* In the event of any single-point failure of systems for raising, lowering or supporting the platform, the platform, loaded as specified in S6.6.3, may not fall vertically faster than 305 mm (12 inches) per second or change angular orientation more than 2 degrees from the orientation prior to the failure. This requirement applies whenever the lift is under primary power source operation or manual backup operation.

S5.7 Control systems.

S5.7.1 The platform lift must meet the requirements of S5.7.2 through S5.7.8 and, when operated by means of the control system specified in 5.7.2, must perform the lift operations specified in S6.6.

S5.7.2 The platform lift system must have a control system that performs at least the following functions:

(a) Activates the control system by providing power to the system. This function must be identified as ''POWER'' on the control.

(b) Moves the lift from a stowed position to a vehicle floor level loading position. This function must be identified as ''DEPLOY'' or ''UNFOLD'' on the control.

(c) Lowers the lift platform. This function must be identified as ''DOWN'' on the control.

(d) Raises the lift platform. This function must be identified as ''UP'' on the control.

(e) Moves the lift from a vehicle floor level loading position to a stowed position. This function must be identified as ''STOW'' or ''FOLD'' on the control.

S5.7.3 The functions specified in S5.7.2 must be activated in a momentary fashion, by one switch or by a combination of switches.

S5.7.4 The control system specified in S5.7.2 must prevent the simultaneous performance of more than one function.

S5.7.5 For platform lifts designed for installation on buses and multipurpose passenger vehicles with a GVWR greater than 3,220 kg (7,100 lbs), all controls, including those specified in S5.7.2, must be positioned together and in a location such that a person standing at and facing the controls has a direct, unobstructed view of the platform lift passenger and the passenger's wheelchair, if the passenger is using a wheelchair, throughout the lift's range of passenger operation. Additional power controls may be positioned in other locations.

S5.7.6 Simple instructions regarding the platform lift operating procedures, including backup operations as specified by S5.9, must be located near the controls. These instructions must be written in English.

S5.7.7 Each operating function of each platform lift control must be identified with characters which are at least 2.5 mm (0.1 inch) in height. For lifts designed for installation on buses and multipurpose passenger vehicles with a GVWR greater than 3,220 kg (7,100 lbs), the characters must be illuminated in accordance with S5.3 of Standard No. 101, when the vehicle's headlights are illuminated.

S5.7.8 The power switch must have two functions: ''ON'' and ''OFF''. The ''ON'' function must allow platform lift operation. When the power switch is in the ''ON'' position, an indicator light near the controls must be activated. The ''OFF'' function must prevent lift movement.

S5.7.9 Any single-point failure in the control system may not prevent the operation of any of the interlocks as specified in S5.10.

S5.8 *Jacking prevention.*

S5.8.1 Except when the platform lift is operated in backup mode as required by S5.9, during the lift operations specified in S6.6, the lift system must meet the requirements of S5.8.2, both with and without a 272 kg mass (600 lb load) on the lift.

S5.8.2 The control system or platform lift design must prevent raising of any portion of the vehicle by the lift system when lowering the lift is attempted while the lift is at the ground level loading position.

S5.9 *Backup operation.*

S5.9.1 During the lift operations specified in S6.6, the platform lift must meet the requirements of S5.9.2, both with and without a 272 kg mass (600 lb load) on the lift.

S5.9.2 The platform lift must be equipped with a manual backup operating mode that can, in the event there is a loss of the primary power source for operating the lift, lower the platform to the ground level loading position and raise the platform to the vehicle floor level loading position from any position in its cycle. During backup operation of the lift, the wheelchair retention device and inner roll stop must be manually deployable and stowable. The operating instructions near the lift controls and in the vehicle owner's manual, as specified in S5.7.6 and S5.12.3, must contain information on manual operation of the wheelchair retention device and inner roll stop during backup operation of the lift.

S5.10 *Interlocks.*

S5.10.1 Except when the platform lift is operated in backup mode as required by S5.9, during the lift

operations specified in S6.6, the requirements of S5.10.2 must be met, both with and without a 272 kg mass (600 lb load) on the lift.

S5.10.2 The platform lift system must have interlocks that prevent:

S5.10.2.1 Forward or rearward mobility of the vehicle unless the platform lift is stowed;

S5.10.2.2 Operation of the platform lift from the stowed position until forward and rearward mobility of the vehicle is inhibited, by means of a parking brake, placing the transmission in park, or other positive device other than the vehicle's service brakes, and the lift access door is open;

S5.10.2.3 Except for platform lifts designed to be occupied while stowed, stowing of the platform lift when occupied by any portion of a passenger's body, and/or a mobility aid;

S5.10.2.4 Movement of the platform lift up or down unless any inner roll stop required to comply with S5.4.8.3 is deployed;

S5.10.2.5 Movement of the platform lift up or down when the platform surface is above the horizontal plane which is 76 mm (3 inches) above the ground level loading positions unless the wheelchair retention device required to comply with S5.4.7 is deployed;

S5.10.2.6 Stowing of the wheelchair retention device required to comply with S5.4.7 unless the platform surface is below the horizontal plane 76 mm (3 inches) above the ground level loading position.

S5.10.2.7 Further downward motion of the platform lift, when the lift contacts an object in its path while lowering;

S5.10.2.8 In the case of a platform lift that is equipped with an outer barrier, deployment of the outer barrier, when occupied by any portion of a passenger's body or mobility aid;

S5.10.2.9 Deployment of any inner roll stop required to comply with S5.4.8.3, when the inner roll stop is occupied by any portion of a passenger's body or mobility aid; and

S5.10.2.10 Movement of the platform lift down, when both the vehicle floor or any bridging device and lift platform are occupied by any portion of a passenger's body or mobility aid.

S5.11 *Operations counter.* The platform lift must have an operations or cycle counter that records each complete up and down cycle through the range of passenger operation. Determination of compliance with this requirement will be made during the lift operations specified in S6.6.

S5.12 *Vehicle owner's manual insert.* The lift manufacturer must provide with the lift inserts for the vehicle owner's manual which provide specific information about the platform lift:

S5.12.1 For vehicles other than buses and multipurpose vehicles with a GVWR over 3,220 kg (7,100 lbs), the dimensions which constitute the unobstructed platform operating volume;

S5.12.2 Maintenance schedule based on the number of cycles on the operations counter specified in S5.11.

S5.12.3 Simple instructions regarding the platform lift operating procedures, including backup operations, as specified by S5.9.

S5.13 *Installation instructions insert.* The manufacturer of a platform lift must include with the installation instructions for each lift, a page that identifies:

(a) The vehicles on which the lift is designed to be installed. Vehicles may be identified by listing the make and model of the vehicles for which the lift is suitable, or by specifying the design elements that would make a vehicle an appropriate host for the particular lift, and for which the platform lift manufacturer has certified compliance.

(b) Any informational material that must be placed in the vehicle owner's manual or elsewhere in the vehicle in order to comply with the requirements of this standard.

S6. *Test conditions and procedures.* Each platform lift must be capable of meeting all of the tests specified in this standard, both separately, and in the sequence specified in this section. The tests specified in S6.5 through S6.8 are performed on a single lift and vehicle combination. The tests specified in S6.2 through S6.4, and S6.9 through S6.11 may be performed with the same lift installed on a test jig rather than in a vehicle. Certification tests of requirements in S5.1 through S5.11 may be performed on a single lift and vehicle combination, except for the requirements of S5.5.3. Attachment hardware may be replaced if damaged by removal and reinstallation of the lift between a test jig and vehicle.

S6.1 *Test Pallet and Load.* The surface of the test pallet that rests on the platform used for the tests specified in S6.6 through S6.8 and S6.11 has sides that measure between 660 mm (26 inches) and 686 mm (27 inches). For the tests specified in S6.6 and S6.7, the test pallet is made of a rectangular steel plate of uniform thickness and the load which rests on the test pallet is made of rectangular steel plate or plates of uniform thickness and sides that measure between 533 mm (21 inches) and 686 mm (27 inches).

S6.2 *Slip Resistance Test.*

S6.2.1 To determine compliance with S5.4.12:

S6.2.2 Clean any 450mm × 100mm (17.5 in × 3.94 in) section of the platform, with household glass cleaner (ammonia hydroxide solution). Wet the cleaned section of the platform by evenly spraying 3 ml (0.10 oz) of distilled water per 100 cm^2 (15.5 in^2)of surface area. Begin the test specified in S6.2.3 within 30 seconds of completion of the wetting process.

S6.2.3 Use the test procedure defined in ANSI/RESNA Standard WC13–1991, ''Wheelchairs—Determination of Coefficient of Friction of Test Surfaces'' except for clauses 5.3, Force gage and 6, Test procedure, on the wet section of platform. In lieu of clauses 5.3 and 6.1, implement the requirements of S6.2.3.1 and 6.2.3.2.

S6.2.3.1 *Force Gage.* The pulling force is measured, at a frequency of at least 10 Hz, by a force gauge that has been calibrated to an accuracy of 2 percent in the range of 25N to 100N.

S6.2.3.2 *Test procedure.* Before the test, prepare the surface of the test rubber by lightly abrading with waterproof silicon carbide paper, grade P120, weight D (120 wet and dry). Then wipe the surface clean with a dry cloth or brush. No solvents or other cleaning materials may be used. To determine the coefficient of friction for the wet platform section pull the test block, with the test rubber attached, by machine at a rate of 20 ± 2mm/s. The machine and test block must be rigidly linked by a device which exhibits a stiffness ≥ $1x10^5$ N/m. Pull the test block for a minimum of 13 seconds. Record the pulling force over the final 10 seconds of the test at a minimum frequency of 10 Hz. Repeat the test at least 5 times, on any one area of the platform surface, in a single direction. Calculate the average pulling force for each trial, F_1 through F_n, where n is the number of trials. Measure the weight of the test block with the force gauge and call it F_b. Calculate the coefficient of friction, μ_p, from the following equation:

$$\mu_p = \frac{F_1 + F_2 + F_3 + \ . \ . \ . \ F_n}{n \times F_b}$$

S6.3 *Environmental Resistance Test.*

S6.3.1 Perform the procedures specified in S6.3.2 through S6.3.5 to determine compliance with S5.3.

S6.3.2 Attachment hardware, as specified in S5.3.1, and externally mounted platform lifts or components, as specified in S5.3.2, must be tested in accordance with American Society of Testing and Materials B117–94, ''Standard Method of Salt Spray (Fog) Testing.'' Any surface coating or material not intended for permanent retention on the metal parts during service life must be removed prior to testing. Except as specified in S6.3.3, the period of the test is to be 50 hours, consisting of two periods of 24 hours exposure to salt spray followed by one hour drying.

S6.3.3 For attachment hardware located within the occupant compartment of the motor vehicle and not at or near the floor, the period of the test is to be 25 hours, consisting of one period of 24 hours exposure to salt spray followed by one hour drying.

S6.3.4 For performance of this test, externally mounted platform lifts or components may be installed on test jigs rather than on the vehicle. The lift must be in a stowed position. The configuration of the test setup must be such that areas of the lift which would be exposed to the outside environment during actual use are not protected from the salt spray by the test jig.

S6.3.5 At the end of the test, any surface exposed to the salt spray must be washed thoroughly with water to remove the salt. After drying for at least 24 hours under laboratory conditions the platform lift or components is to be examined for ferrous corrosion on significant surfaces, that is, all surfaces that can be contacted by a sphere 2 centimeters in diameter.

S6.4 *Wheelchair Retention Impact Test.*

S6.4.1 Determine compliance with S5.4.7.1 and S5.4.7.2 using the test device specified in S6.4.2, under the procedures specified in S6.4.3 and S6.4.4.

S6.4.2 The test device is an unloaded power wheelchair whose size is appropriate for a 95th percentile male and that has the dimensions, configuration and components described in paragraphs (a)–(j). If the dimension in paragraph (i) is measured for a particular wheelchair by determining its tipping angle, the batteries are prevented from moving from their original position—

(a) A cross-braced steel frame;

(b) A sling seat integrated in the frame;

(c) Belt drive;

(d) Detachable footrests, with the lowest point of the footrest adjustable in a range not less than 25 mm (1 inch) to 123 mm (5 inches) from the ground;

(e) Pneumatic rear wheels with a diameter not less than 495 mm (19.5 inches) and not more than 521 mm (20.5 inches);

(f) Pneumatic front wheels with a diameter not less than 190 mm (7.5 inches) and not more than 216 mm (8.5 inches);

(g) A distance between front and rear axles not less than 457 mm (18 inches) and not more than 533 mm (21 inches);

(h) A horizontal distance between rear axle and center of gravity not less than 114 mm (4.5 inches) and not more than 152 mm (6.0 inches);

(i) A vertical distance between ground and center of gravity not less than 260 mm (10.25 inches) and not more than 298 mm (11.75 inches);

(j) A mass of not less than 72.5 kg (160 lbs) and not more than 86.0 kg (190 lbs).

S6.4.3 Conduct the test in accordance with the procedures in paragraphs (a) through (e) to determine compliance with S5.4.7.1. In the case of platform lifts designed for installation on vehicles with a GVWR equal to or less than 3,220 kg (7,100 lbs), perform both (e)(1) and (2), unless the operating directions specify a required direction of wheelchair movement onto the platform. When a direction is indicated in the operating instructions, perform the procedure specified in paragraph (e)(1) or (2) with the test device oriented as required by the operating instructions.

(a) Place the lift platform at the vehicle floor level loading position.

(b) If the wheelchair retention device is an outer barrier, the footrests are adjusted such that at their lowest point they have a height 25 mm (1 inch) less than the outer barrier. If the wheelchair retention device is not an outer barrier, the footrests are adjusted such that at their lowest point they have a height 51 mm (2 inches) above the platform.

(c) Position the test device with its plane of symmetry coincident with the lift reference plane and at a distance from the platform sufficient to achieve the impact velocities required by paragraph (e) of this section.

(d) Accelerate the test device onto the platform under its own power such that the test device impacts the wheelchair retention device at each speed, direction, and load condition combination specified in paragraph (e) of this section. Maintain power to the drive motors until all wheelchair motion has ceased except rotation of the drive wheels. Note the position of the wheelchair after its motion has ceased following each impact to determine compliance with S5.4.7. If necessary, after each impact, adjust or replace the footrests to restore them to their original condition.

(e) The test device is operated at the following speeds, in the following directions—

(1) At a speed of not less than 2.0 m/s (4.4 mph) and not more than 2.1 m/s (4.7 mph), forward, with a load of 0 kg (0 lbs).

(2) At a speed of not less than 1.75 m/s (3.9 mph) and not more than 1.85 m/s (4.1 mph), rearward, with a load of 0 kg (0 lbs).

S6.4.4 For rotary platform lifts, conduct the test under the procedures in (a)–(e) to determine compliance with S5.4.7.2. In the case of lifts designed for installation on vehicles with a GVWR less than or equal to 3,220 kg (7,100 lbs), perform the test in both possible test device orientations unless a required direction of wheelchair movement onto the platform is indicated in the operating instructions. For lifts designed for installation on vehicles with a GVWR less than or equal to 3,220 kg (7,100 lbs) where a required direction of wheelchair movement onto the platform is indicated in the operating instructions, perform the test with the test device oriented as required by the operating instructions.

(a) Adjust the footrests of the test device to the shortest length. Place the test device on the platform with its plane of symmetry coincident with the lift reference plane.

(b) Position the platform surface 90 mm (3.5 in) ± 10 mm (0.4 in) above the ground level position.

(c) Slowly move the test device in the forward direction until it contacts a wheelchair retention device. Activate the controller of the test device such that, if the test device were unloaded and unrestrained on a flat, level surface, it would achieve a maximum forward velocity of not less than 2.0 m/s (4.4 mph) and not more than 2.1 m/s (4.7 mph).

(d) Realign the test device on the platform so that its plane of symmetry is coincident with the lift reference plane. Slowly move the test device in the rearward direction until it contacts a wheelchair retention device. Activate the controller of the test device such that, if the test device were unloaded and unrestrained on a flat, level surface, it would achieve a maximum rearward velocity of not less than 1.75 m/s (3.9 mph) and not more than 1.85 m/s (4.1 mph).

(e) During the impacts specified in paragraphs (c) and (d), maintain power to the drive motors until all test device motion has ceased except rotation of the drive wheels. Note the position of the test device after its motion has ceased following each impact to determine compliance with S5.4.7.2.

S6.5 *Inner Roll Stop Test.* Determine compliance with S5.4.8 using the test device specified in S6.4.2, in an unloaded condition, in accordance with the procedures specified in (a) through (f).

(a) Place the lift platform at the ground level loading position, such that the platform is level.

(b) Adjust the footrests of the test device to the shortest length. Position the test device on the ground at a distance from the platform sufficient to achieve the impact velocity required by (c) of this section. The plane of symmetry of the test device is coincident with the lift reference plane and the forward direction of travel is onto the platform.

(c) Accelerate the test device onto the platform such that the vehicle impacts the inner roll stop at a speed of not less than 1.5 m/s (3.4 mph) and not more than 1.6 m/s (3.6 mph). Determine compliance with S5.4.8.3(a).

(d) If necessary, adjust or replace the footrests to restore them to the condition they were in prior to the impact. Reposition the test device on the platform with its plane of symmetry coincident with the lift reference plane. Slowly move the test device in the forward direction until it contacts the inner roll stop.

(e) Apply a static load to the inner roll stop by activating the controller of the test device such that, if the test device were unrestrained on a flat and level surface, it would achieve a maximum forward velocity of not less than 2.0 m/s and not more than 2.1 m/s.

(f) Raise the platform to the vehicle loading position. Determine compliance with S5.4.8.3(b).

S6.6 *Static Load Test I—Working Load.*

S6.6.1 By use of the lift controls specified in S5.7.2, perform the operations specified in S6.6.2 through S6.6.8 in the order they are specified. During the lift operations specified in:

(a) S6.6.3, determine compliance of the platform lift with S5.1.2;

(b) S6.6.3 through S6.6.8, determine compliance of the platform lift with S5.7.2 through 5.7.8 and 5.10.2.1;

(c) S6.6.4 through 6.6.7, determine compliance of the platform lift with S5.2.2.1, S5.2.3, S5.2.4, S5.4.2 through S5.4.6, S5.4.7.4, S5.4.9.2 through S5.4.9.5, S5.4.10, S5.4.11, S5.10.2.4, S5.10.2.5 and S5.11;

(d) S6.6.3 and S6.6.8, determine compliance of the platfrom lift with S5.2.2.2;

(e) S6.6.9, determine compliance of the platform lift with S5.10;

(f) S6.6.2 and S6.6.3, determine compliance of the platform lift with S5.10.2.2;

(g) S6.6.7 and S6.6.8, determine compliance of the platform lift with S5.10.2.3;

(h) S6.6.5 and S6.6.7, determine compliance of the platform lift with S5.10.2.7;

(i) S6.6.4 and S6.6.6, determine compliance of the platform lift with S5.8, S5.10.2.6, S5.10.2.8 and S5.10.2.9.

S6.6.2 Put the lift platform in the stowed position.

S6.6.3 Deploy the lift platform. Center a static load on the upper surface of the test pallet such that the total mass (weight) of the static load and test pallet is 272 kg (600 lbs). Center the loaded test pallet on the platform surface.

S6.6.4 Lower the lift platform from the vehicle floor level loading position to the ground level loading position, stopping once midway between the two positions. Remove the test pallet from the lift platform.

S6.6.5 Raise the lift platform from the ground level loading position to the vehicle floor level loading position, stopping once midway between the two positions.

S6.6.6 Lower the lift platform from the vehicle floor level loading position to the ground level loading position, stopping once midway between the two positions.

S6.6.7 Center the loaded test pallet on the platform surface. Raise the lift platform from the ground level loading position to the vehicle floor level loading position, stopping once midway between the two positions.

S6.6.8 Remove the pallet from the lift platform. Stow the lift.

S6.6.9 Turn power off to the lift and repeat 6.6.3 through 6.6.8, using the backup operating mode as specified by S5.9.

S6.7 *Fatigue endurance test.*

S6.7.1 Perform the test procedure specified in S6.7.2 through S6.7.9 and determine compliance with S5.5.1.

S6.7.2 Put the unloaded lift platform at the ground level loading position. Center a static load on the upper surface of the test pallet such that the total weight (mass) of the static load and test pallet is 272 kg (600 lbs.). Center the loaded test pallet on the platform surface.

S6.7.3 For platform lifts designed for installation on buses and MPVs with GVWR greater than 3,220 kg (7,100 lbs.), by use of the lift controls specified in S5.7.2, perform the operation specified in S6.7.3.1 through S6.7.3.3 in the order they are given.

S6.7.3.1 Raise and lower the lift platform through the range of passenger operation 3,900 times.

S6.7.3.2 Remove the test pallet from the lift platform. Raise the lift platform to the vehicle floor loading position, stow the lift, deploy the lift and lower the lift platform to the ground level loading position 3,900 times.

S6.7.3.3 Perform the test sequence specified in S6.7.3.1 and S6.7.3.2 four times.

S6.7.4 For platform lifts designed for installation on vehicles other than buses and multipurpose vehicles with a GVWR over 3,220 kg (7,100 lbs), by use of the lift controls specified in S5.7.2, perform the operation specified in S6.7.4.1 through S6.7.4.3 in the order they are given.

S6.7.4.1 Raise and lower the lift platform through the range of passenger operation 1,100 times.

S6.7.4.2 Remove the test pallet from the lift platform. Raise the lift platform to the vehicle floor loading position, stow the lift, deploy the lift and lower the lift platform to the ground level loading position 1,100 times.

S6.7.4.3 Perform the test sequence specified in S6.7.3.1 and S6.7.4.2 four times.

S6.7.5 Each sequence of lift operations specified in S6.7.3.1, S6.7.3.2, S6.7.4.1 and S6.7.4.2 must be done in blocks of 10 cycles with a 1 minute maximum rest period between each cycle in any block. The minimum rest period between each block of 10 cycles is to be such that the temperature of the lift components is maintained below the values specified by the manufacturer or that degrade the lift function.

S6.7.6 During the test sequence specified in S6.7.2 through S6.7.4, perform any lift maintenance as specified in the vehicle owner's manual.

S6.8 *Static Load Test II—proof load.*

S6.8.1 Perform the test procedures specified in S6.8.2 through S6.8.5 and determine compliance with S5.5.2.

S6.8.2 Center a static load on the upper surface of the test pallet such that the total mass (weight) of the static load and test pallet is 816 kg (1,800 lbs).

S6.8.3 When the lift platform is at the vehicle floor level loading position, center the loaded test pallet on the platform surface. Fully place the pallet on the platform within 1 minute of beginning to place it.

S6.8.4 Two minutes after fully placing the loaded test pallet on the platform surface, remove the loaded test pallet and examine the platform lift and vehicle for separation, fracture or breakage.

S6.8.5 After completing the static load test specified in S6.8.2 through S6.8.4, repeat Static Load Test I specified in S6.6.

S6.9 *Handrail test.*

S6.9.1 To determine compliance with S5.4.9.6 and S5.4.9.7, apply 4.4 N (1 lb. force) through an area of 1290 mm^2 (2 $in.^2$) in any direction at any point on the handrail. Use this position of the handrail relative to the lift platform as the reference point for the measurement of handrail displacement. Apply 445 N (100 lb. force) through an area of 1290 mm^2 (2 $in.^2$) in a direction and location opposite to that of the 4.4 N (1 lb. force). Attain the force within 1 minute after beginning to apply it. Five seconds after attaining the force, measure the amount of displacement of the handrail relative to the reference point, and measure the distance between the outside of the handrail and the nearest portion of the vehicle. Release the 445 N (100 lb. force) and reapply the 4.4 N (1 lb. force) in the direction and location that it was first applied. Five seconds after attaining the force, measure the position of the handrail with respect to the reference point to determine if there is any permanent deformation of the handrail relative to the lift platform.

S6.9.2. To determine compliance with S5.4.9.8, apply 4.4 N (1 lb. force) through an area of 1,290 mm^2 (2 in^2) in any direction at any point on the handrail. Use this position of the handrail relative to the lift platform as the reference point for the measurement of handrail displacement. Apply 1,112 N (250 lb. force) through an area of 1,290 mm^2 (2 in^2) in a direction and location opposite to that of the 1 4.4 N (1 lb force). Attain the force within 1 minute after beginning to apply it. Five seconds after attaining the force, measure the amount of displacement of the handrail relative to the reference point. Maintain the force for two minute. Release the force and inspect the handrail for cracking, separations or fractures.

S6.10 *Wheelchair Retention Overload Test.*

S6.10.1 Perform the test procedures as specified in S6.10.2 through S6.10.5 to determine compliance with S5.4.7.2.

S6.10.2 Position the platform surface 89 mm (3.5 inches) above the ground level loading position. Apply 7,117 N (1,600 lb. force) to the wheelchair retention device in a direction parallel to both the platform lift and platform reference planes. Attain the force within 1 minute after beginning to apply it.

S6.10.3 For a wheelchair retention device that is in the form of an outer barrier, apply the force through a rectangular area with a height of 25 mm (1 inch) and a width spanning the entire barrier. Distribute the force evenly about an axis 64 mm (2.5 inches) above the platform reference plane. If the bottom edge of the outer barrier falls 51 mm (2 inches) or more above the platform reference plane, distribute the force about an axis 13 mm (0.5 inches) above the bottom edge of the barrier.

S6.10.4 For a wheelchair retention device other than an outer barrier, place the test device specified in S6.4.2 on the lift platform with its plane of symmetry coincident with the lift reference plane and directed such that forward motion is impeded by the wheelchair retention device. Move the test device forward until it contacts the wheelchair retention device. Remove the test device from the platform. Apply the force specified in S6.10.2 distributed evenly at all areas of the wheelchair retention device which made contact with the test device when it was moved forward. Attain the force within 1 minute after beginning to apply it.

S6.10.5 After maintaining the force for two minutes, remove it and examine the wheelchair retention device for separation, fracture or breakage.

S6.11 *Static Load Test III—ultimate load.*

S6.11.1 Perform the test procedures as specified in S6.11.2 through S6.11.5 to determine compliance with S5.5.3.

S6.11.2 Reinforce the vehicle structure where the lift is attached such that it will not deform to an extent perceptible without a measuring instrument during application of the load specified in S6.11.3 or remove the platform lift from the vehicle and install it on a test jig that will not deform to an extent perceptible without a measuring instrument during application of the load specified in S6.11.3.

S6.11.3 Place a static load on the upper surface of the test pallet such that the center of gravity of the load is over the geometric center of the pallet and the total mass (weight) of the static load and test pallet is 1,088 kg (2,400 pounds).

S6.11.4 When the lift platform is at the vehicle floor level loading position, center the loaded test pallet on the platform surface. Fully place the pallet on the platform within 1 minute of beginning to place it.

S6.11.5 Two minutes after fully placing the loaded test pallet on the platform surface, remove the loaded test pallet and examine the platform lift for separation, fracture or breakage.

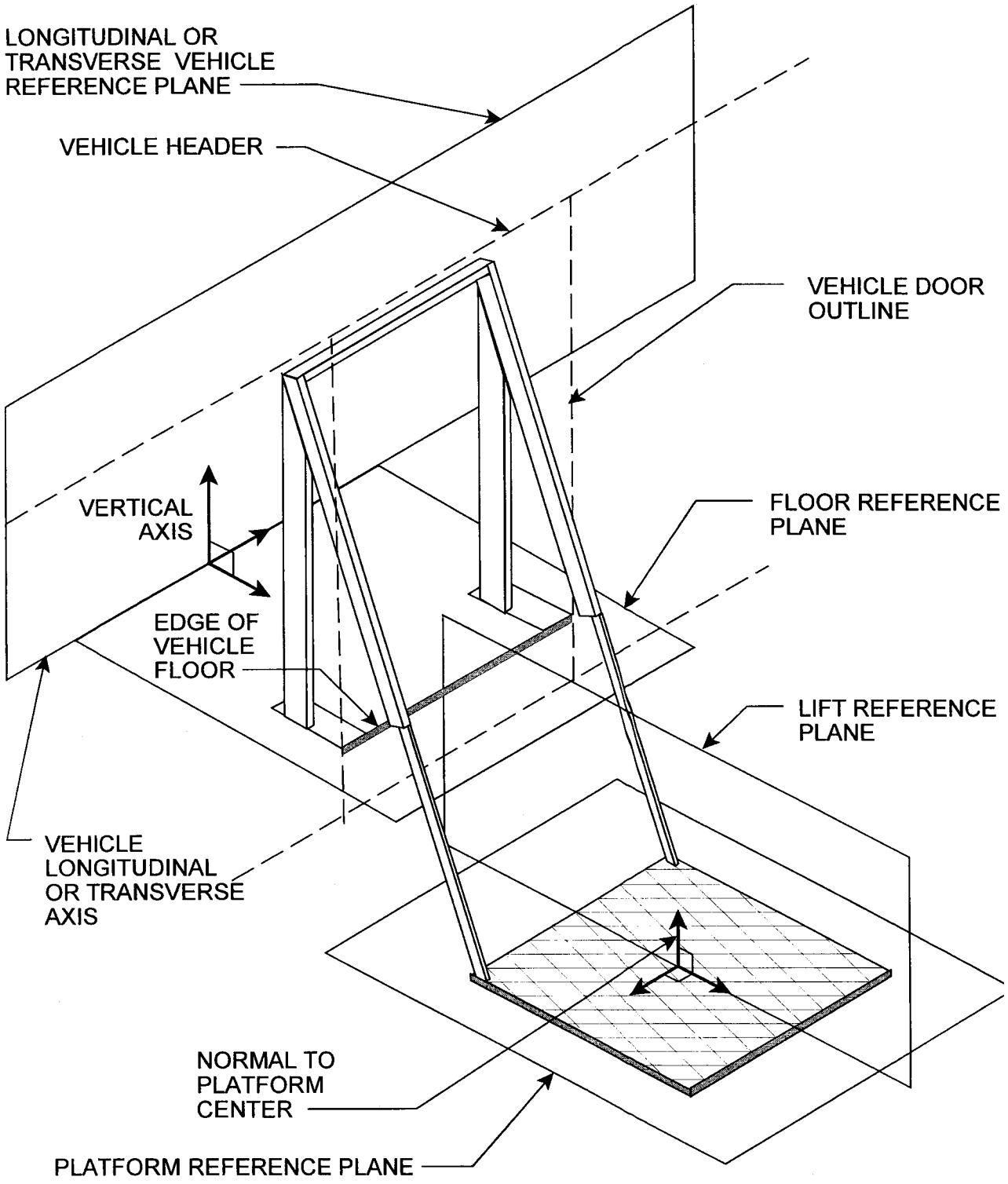

PLANES OF REFERENCE

FIGURE 1

BILLING CODE 4910–59–C

5. Section 571.142 would be added to read as follows:

§ 571.142 Standard No. 142; Platform lift installations in motor vehicles.

S1. *Scope.* This standard specifies requirements for vehicles equipped with a platform lift used to assist persons with limited mobility in entering or leaving a vehicle.

S2. *Purpose.* The purpose of this standard is to prevent injuries and fatalities to passengers and bystanders during the operation of platform lifts installed in motor vehicles.

S3. *Application.* This standard applies to motor vehicles, with a platform lift to carry passengers into and out of the vehicle.

S4. *Requirements.*

S4.1 *Installation Requirements.*

S4.1.1 Each vehicle must be equipped with a platform lift certified as meeting Federal Motor Vehicle Safety Standard No. 141, Lift Systems for Motor Vehicles (§ 571.141).

S4.1.2 Platform lifts must be attached to the vehicle in accordance with the installation instructions or procedures provided pursuant to S5.13 of Standard 141. The vehicle must be of a type identified in the installation instructions as appropriate for the platform lift and as certified by the platform lift manufacturer.

S4.1.3 Once installed, the platform lift must be fully operational and capable of meeting all operational tests specified in the platform lift manufacturer's installation instructions.

S4.2 *Owner's Manual Insert Requirements.* The vehicle owner's manual must contain inserts pertaining to the platform lift which specify:

S4.2.1 For vehicles other than buses and multipurpose vehicles with a GVWR over 3,220 kg (7,100 lbs), the dimensions which constitute the unobstructed platform operating volume;

S4.2.2 For vehicles with a GVWR less than or equal to 3,220 kg (71,000 lbs), information on whether a wheelchair user must back on to the lift platform due to the absence of an inner roll stop;

S4.2.3 Maintenance schedule based on the number of cycles on the operations counter specified in S5.11 of Standard 141; and

S4.2.4 Simple instructions regarding the platform lift operating procedures, including back-up operations, as specified in S5.9 of Standard 141.

S4.3 *Control System.*

S4.3.1 For buses and MPVs with a GVWR greater than 3,220 kg (7,100 lbs), any and all controls provided for the lift by the platform lift manufacturer, including those specified in S5.7 of standard 141, must be located together and in a position such that the control operator has a direct, unobstructed view of the platform lift passenger and their wheelchair (if the passenger is using a wheelchair) throughout the lift's range of passenger operation. Additional power controls may be located in other positions.

S4.3.2 Simple instructions regarding the platform lift operating procedures, including backup operations as specified by S5.9 of Standard 141, must be located near the controls. These instructions must be written in English.

§ 571.201 [Amended]

6. Section 571.201 would be amended by removing the definition of ''motor home'' contained in § 571.201 S3, Definitions.

§ 571.205 [Amended]

7. Section 571.205 would be amended by removing the definition of ''motor home'' contained in § 571.205 S4, Definitions.

§ 571.208 [Amended]

8. Section 571.208 would be amended by removing and reserving S4.2.4.1(a).

Issued on July 20, 2000.

Stephen R. Kratzke,

Associate Administrator for Performance Safety Standards.

[FR Doc. 00–18773 Filed 7–21–00; 2:04 pm]

BILLING CODE 4910–59–P

Federal Register

Thursday,
July 27, 2000

Part IV

Nuclear Regulatory Commission

Revision of Management Directive for Review of 10 CFR 2.206 Petitions; Request for Comments; Notice

NUCLEAR REGULATORY COMMISSION

Revision of Management Directive for Review of 10 CFR 2.206 Petitions; Request for Comments

AGENCY: Nuclear Regulatory Commission.

ACTION: Request for comments.

SUMMARY: NRC Management Directive (MD) 8.11 describes the Nuclear Regulatory Commission's (NRC's) review process for 10 CFR 2.206 petitions. In a continuing effort to improve the review process, the NRC staff has developed process changes and a draft revision to MD 8.11. This notice invites public comment on the draft revision to MD 8.11.

DATES: The comment period ends September 1, 2000. Comments received after this date will be considered if it is practical to do so, but the staff is able to assure consideration only for those comments received on or before this date.

ADDRESSES: Mail written comments to David L. Meyer, Chief, Rules and Directives Branch, Division of Administrative Services, Office of Administration, U.S. Nuclear Regulatory Commission, Washington, DC 20555–0001. Comments may also be sent by completing the online comment form for MD 8.11 at *http://www.nrc.gov/NRC/MD/index.html.*

In addition, comments may be delivered to Room 6D59, Two White Flint North, 11555 Rockville Pike, Rockville, Maryland, between 7:30 a.m. and 4:15 p.m. Federal workdays. Copies of the draft revision to MD 8.11, the complete text of which follows this notice, are available for a fee at the NRC's Public Document Room, the Gelman Building, 2120 L Street, NW., Washington, DC. Publicly available records are accessible electronically from the ADAMS Public Library component on the NRC Web site, *http://www.nrc.gov* (the Electronic Reading Room). This notice and the draft revision to MD 8.11 are also available electronically on the Internet at *http://www.nrc.gov/NRC/MD/index.html.*

FOR FURTHER INFORMATION CONTACT: Herbert N. Berkow, Mail Stop O–8H12, Office of Nuclear Reactor Regulation, U.S. Nuclear Regulatory Commission, Washington, DC 20555–0001; telephone (301) 415–1485 and e-mail at hnb@nrc.gov.

SUPPLEMENTARY INFORMATION: The process changes to MD 8.11 were identified and developed based on the comments received from the NRC staff and members of the public. The staff requested public comments on the current revision of MD 8.11 in a **Federal Register** notice that was published on October 7, 1999 (64 FR 54654). The staff held public meetings on December 15, 1999, and February 10, 2000, to discuss potential process improvements. Based on the comments received, the staff developed three major process changes:

1. The review process, as revised in July 1999, offers petitioners an opportunity to meet with the staff's petition review board (PRB), either in person or by teleconference, before the initial PRB meeting. The purpose of this meeting is to allow the petitioner an opportunity to provide elaboration and clarification of the petition and any requests for immediate action. The staff is planning to provide an opportunity for petitioners to meet with the PRB *after* the PRB has discussed the petition, as well as before. The purpose of a meeting at this stage is to allow the petitioner to comment on the PRB's recommendations regarding whether (1) the petition meets the criteria for review under 10 CFR 2.206 and (2) any requested immediate actions will be granted. As is currently the case, the licensee would also be invited to participate.

2. The staff plans to eliminate the criteria in MD 8.11 that must be satisfied before a technical meeting can be offered during the staff's review of the petition.

3. The staff's response to a petition is a director's decision which may grant the petition, in whole or in part, or deny the petition. The staff plans to provide a copy of the proposed director's decision to the petitioner and the licensee for comments before it is issued in final form. The proposed director's decision would also be placed in the public document room. The intent of this new provision in the process is to allow the petitioner and the licensee an opportunity to review the proposed director's decision and identify any potential errors or issues that have not been addressed. The staff would then reconsider any affected portions of the proposed director's decision. Because the staff's disposition of the comments would be included in the director's decision, NRC management would have an opportunity to evaluate the staff's handling of the comments before the director's decision is formally issued.

In addition to these specific changes, the staff has completely rewritten MD 8.11 to improve the flow of the document and make it easier to use.

The Commission met with the staff and a public panel on May 25, 2000, to discuss the staff's planned process changes. As background for the meeting, the staff sent a memorandum to the Commission on May 4, 2000 (accession number ML003708647), outlining the history behind previous process changes and the basis for the new changes. In a staff requirements memorandum on June 20, 2000, the Commission stated that it supported the staff's plans to make changes to the review process for 10 CFR 2.206 petitions.

The NRC staff has developed the revision to MD 8.11, incorporating the changes described above, and requests comments on the revision. Management directives are internal NRC procedures which are not ordinarily published for public comment. However, MD 8.11 deals with a process that directly involves the public, and the NRC staff has determined that its efforts to improve the process will benefit from public participation. All comments received will be considered. The result of this effort will be reflected in a future revision of MD 8.11.

Dated at Rockville, Maryland, this 19th day of July 2000.

For the Nuclear Regulatory Commission.

Herbert N. Berkow,

Director, Project Directorate II, Division of Licensing Project Management, Office of Nuclear Reactor Regulation.

BILLING CODE 7590–01–P

ATTACHMENT TO NOTICE

Review Process for 10 CFR 2.206 Petitions

Directive 8.11

Contents

Policy 1

Objectives 1

Organizational Responsibilities and Delegations of Authority 2

Executive Director for Operations (EDO) 2
Chief Information Officer (CIO) 2
General Counsel (GC) 2
Office Directors 2
Regional Administrators 3
2.206 PRB Chairperson 3
Division Directors 4
Director, Division of Licensing Project Management, (DLPM)
Office of Nuclear Reactor Regulation (NRR) 4

Applicability 4

Handbook 4

Definitions 4

References 5

U. S. Nuclear Regulatory Commission

Volume: 8 Licensee Oversight Programs NRR

Review Process for 10 CFR 2.206 Petitions Directive 8.11

Policy
(8.11–01)

Through Section 2.206 of Title 10 of the *Code of Federal Regulations* (10 CFR 2.206), the U.S. Nuclear Regulatory Commission provides members of the public with the means to request enforcement-related (as distinguished from others such as licensing or rulemaking) action. The Commission may grant a request for action it receives, in whole or in part, take other action that satisfies the concerns raised by the requester, or deny the request. Requests that raise health and safety and other concerns without requesting enforcement-related action will be reviewed by means other than the 10 CFR 2.206 process.

Objectives
(8.11–02)

- To ensure the public health and safety through the prompt and thorough evaluation of any potential problem addressed by a petition filed under 10 CFR 2.206. (021)
- To provide for appropriate participation by the petitioners in, and observation by the public of, NRC's decisionmaking activities related to a 10 CFR 2.206 petition. (022)
- To ensure effective communication with the petitioner and other stakeholders on the status of the petition, including providing relevant documents and notification of interactions between the NRC staff and a licensee or certificate holder relevant to the petition. (023)

Organizational Responsibilities and Delegations of Authority
(8.11–03)

Executive Director for Operations (EDO)
(031)

Receives and assigns action for all petitions filed under 10 CFR 2.206.

Chief Information Officer (CIO)
(032)

Provides hardware, software, and communication services support of the NRC Home Page for making information publicly available on the status of the petitions.

General Counsel (GC)
(033)

- Gives legal review and advice on 10 CFR 2.206 petitions and director's decisions upon specific request from the staff in special cases or where the petition raises legal issues. (a)
- Gives legal advice to the EDO, office directors, and staff on relevant 2.206 matters. (b)

Office Directors
(034)

- Have overall responsibility for assigned petitions. (a)
- Approve or deny a petitioner's request for immediate action. (b)
- Sign acknowledgment letters, *Federal Register* notices and director's decisions. (c)
- Provide up-to-date information for the monthly status report on all assigned petitions. (d)
- Appoint a petition review board (PRB) chairperson. (e)
- Designate a petition manager for each petition. (f)

Office Directors
(034) (continued)

- Promptly notify (1) the Office of Investigations of any allegations of suspected wrongdoing by a licensee or certificate holder, applicant for a license or certificate, their contractors, or their vendors or (2) the Office of the Inspector General of suspected wrongdoing by an NRC staff person or NRC contractor, that are contained in the petitions they may receive. (g)
- Provide drafted director's decisions to the Office of Enforcement for review. (h)
- Designate an office 2.206 petition coordinator (Office of Nuclear Materials Safety and Safeguards). (i)

Regional Administrators
(035)

- Promptly refer any 2.206 petitions they may receive to the EDO. (a)
- As needed, provide support and information for the preparation of an acknowledgment letter and/or a director's decision on a 2.206 petition. (b)
- Make the petition manager aware of information that is received or that is the subject of any correspondence relating to a pending petition. (c)
- Participate, as necessary, in meetings with the petitioner and public, in technical review of petitions and in deliberations of the PRB. (d)

2.206 PRB Chairperson
(036)

Each program office has a board chairperson, generally a Senior Executive Service manager, who will—

- Convene PRB meetings. (a)
- Ensure appropriate review of all new petitions in a timely manner. (b)
- Ensure appropriate documentation of PRB meetings. (c)
- Convene periodic PRB meetings with the petition managers to discuss the status of open petitions and to provide guidance for timely issue resolution. (d)

Division Directors
(037)

Concur, as appropriate, in each extension request from petition managers in their organization and forward the extension request to the Office of the EDO for approval.

Director, Division of Licensing Project Management, (DLPM)
Office of Nuclear Reactor Regulation (NRR)
(038)

Appoints the Agency 2.206 Petition Coordinator, normally a DLPM staff person.

Applicability
(8.11–04)

The policy and guidance in this directive and handbook apply to all NRC employees.

Handbook
(8.11–05)

Handbook 8.11 details the procedures for staff review and disposition of petitions submitted under Section 2.206.

Definitions
(8.11–06)

A 10 CFR 2.206 Petition. A written request filed by any person that the Commission modify, suspend, or revoke a license, or take any other enforcement-related action that may be proper. The request must meet the criteria for review under 10 CFR 2.206 (see Part III of Handbook 8.11).

A 10 CFR 2.206 Technical Review Meeting. A meeting open to the public and held by NRC staff to provide an opportunity to the petitioner and the licensee, certificate holder, or other affected party to supply information to assist NRC staff in the evaluation of petitions.

References
(8.11–07)

Code of Federal Regulations—

10 CFR 2.206, "Requests for Action Under this Subpart."

10 CFR 2.790, "Public Inspections, Exemptions, Requests for Withholding."

10 CFR 2.1205, "Request for a hearing; petition for leave to intervene."

Management Directives—

— 3.5, "Public Attendance at Certain Meetings Involving the NRC Staff."

— 8.8, "Management of Allegations."

— 12.6, "NRC Sensitive Unclassified Information Security Program."

Memorandum of Understanding Between the NRC and the Department of Justice, December 12, 1988.

"Nuclear Regulatory Commission Issuances," published quarterly as NUREG-0750.

Review Process for 10 CFR 2.206 Petitions

Handbook 8.11

Contents

Part I

Introduction 1

Title 10 of the *Code of Federal Regulations*, Section 2.206 (10 CFR 2.206) (A) 1

General Cautions (B) 1

Part II

Initial Staff Actions 3

NRC's Receipt of a Petition (A) 3

Process Summary (1) 3

Assignment of Staff Action (2) 3

Office Action (B) 4

Petition Manager Action (C) 4

Part III

Petition Review Board (PRB) 7

General (A) 7

Schedule (1) 7

Board Composition (2) 7

Preparation for the PRB Meeting (B) 8

Criteria for Petition Evaluation (C) 10

Criteria for Reviewing Petitions Under 10 CFR 2.206 (1) 10

Criteria for Rejecting Petitions Under 10 CFR 2.206 (2) 11

Criteria for Consolidating Petition (3) 12

PRB Meeting (D) 12

Informing the Petitioner of the Results (E) 14

Meeting with the Petitioner (F) 14

Response to the Petitioner (G) 15

Requests That Do Not Meet the Criteria (1) 15

Requests That Meet the Criteria (2) 15

Sending Documents to the Petitioner (H) 16

Contents (continued)

Part IV

Petition Review Activities 18

Reviewing the Petition (A) 18
Interoffice Coordination (1) 18
Request for Licensee Input (2) 19
Technical Review Meeting With the Petitioner (3) 19
Additional Petition Review Board (PRB) Meetings (4) 19
Schedule (B) 19
Keeping the Petitioner Informed (C) 20
Updates to Management and the Public (D) 21

Part V

The Director's Decision 22

Content and Format (A) 22
Final Versus Partial Director's Decisions (B) 23
Granting the Petition (C) 23
Denying the Petition (D) 24
Issuing the Proposed Director's Decision for Comment (E) 24
Comment Disposition (F) 25
Issuing the Director's Decision (G) 25
Administrative Issues (H) 26
Commission Actions (I) 28

Exhibits

1 Simplified 2.206 Process Flow Chart 29
2 Petition Manager Checklist 31
3 Sample Closure Letter for Requests That are not 2.206 Petitions 33
4 Sample Acknowledgment letter 34
5 Sample *Federal Register* Notice 35
6 Sample Director's Decision and Cover Letter 36
7 Sample *Federal Register* Notice for Director's Decision 40
8 Sample Letters Requesting Comments on the Proposed Director's Decision 42

Part I

Introduction

Title 10 of the *Code of Federal Regulations*, Section 2.206 (10 CFR 2.206) (A)

This section of the regulations has been a part of the Commission's regulatory framework since the Commission was established in 1975. 10 CFR 2.206 permits any person to file a petition to request that the Commission take enforcement-related action., i.e., to modify, suspend, or revoke a license or to take other appropriate action. (1)

Section 2.206 requires that the petition be submitted in writing and provide the grounds for taking the proposed action. The NRC staff will not treat general opposition to nuclear power or a general assertion of a safety problem, without supporting facts, as a formal petition under 10 CFR 2.206. The staff will treat general requests as allegations or routine correspondence. Petitioners are encouraged to provide a telephone number or email address through which the staff may make contact. (2)

General Cautions (B)

Management Directive 8.8, "Management of Allegations," provides agency policy with regard to notifying the Office of Investigations (OI) and the Office of the Inspector General (OIG) of wrongdoing matters, as well as initiating, prioritizing, and terminating investigations. The petition manager should become familiar with the current version of this directive and follow the policy outlined therein when dealing with issues requiring OI or OIG investigations. (1)

Any mention outside NRC of an ongoing OI or OIG investigation, for example, as an explanation for schedule changes, requires the approval of the Director, OI or OIG, respectively. (2)

General Cautions (B) (continued)

If the petition contains information on alleged wrongdoing on the part of a licensee or certificate holder, an applicant for a license or certificate, their contractors, or their vendors, treat the petition, or the relevant part of the petition, as an allegation and promptly notify OI. If the petition contains information on alleged wrongdoing involving an NRC employee, NRC contractors, or NRC vendors, promptly notify OIG. (3)

Note that throughout the balance of this handbook, any references to a licensee shall be interpreted to include certificate holders, applicants for licenses or certificates, or other affected parties. (4)

Part II
Initial Staff Actions

NRC's Receipt of a Petition (A)

Process Summary (1)

After NRC receives a petition, the Executive Director for Operations (EDO) assigns it to the director of the appropriate office for evaluation and response. The original incoming petition is sent to the office and a copy of the petition is sent to the Office of the General Counsel (OGC). The official response is the office director's written decision addressing the issues raised in the petition. The office director can grant, partially grant, or deny the petition. The Commission may, on its own initiative, review the director's decision, although it will not entertain a request for review of the director's decision

Assignment of Staff Action (2)

Petitions may be in the form of correspondence or requests for NRC action that may or may not cite 10 CFR 2.206 and may initially be directed to staff other than the EDO. In any of these cases, the staff member who receives the document should make an initial evaluation as to whether the document meets the criteria for review under 10 CFR 2.206 provided in Part III of this handbook. Staff members who are uncertain whether or not the document meets the criteria should consult their management or office coordinators for further guidance. If a petition meets the criteria but does not specifically cite 10 CFR 2.206, the staff will attempt to contact the petitioner by telephone to determine if the he or she wants the request processed pursuant to 10 CFR 2.206. The staff may determine that a request forwarded for staff action is not a petition for enforcement-related action but, rather, a petition for rulemaking, for example. If there is any uncertainty about whether or not a request is a petition under 10 CFR 2.206, it should be treated as one so that a petition review board (PRB) can make its recommendations, as described in Part III of this handbook. (a)

NRC's Receipt of a Petition (A) (continued)

Assignment of Staff Action (2) (continued)

If the staff receives a request that it believes is a 10 CFR 2.206 petition, it will forward the request to the Office of the EDO (OEDO) for assignment of action. Petitions also may be forwarded to the OEDO from an Atomic Energy and Licensing Board or from a Presiding Officer in accordance with 10 CFR 2.1205(l)(2). The EDO will assign each petition to the appropriate office for action. If the document does not cite 10 CFR 2.206 and does not meet the criteria for review under that section, the staff will respond to it under some other process (e.g., routine correspondence, allegations). (b)

Petitions that cite 10 CFR 2.206 and are addressed to the EDO will be added to the Agencywide Documents Access and Management Systems (ADAMS) by OEDO. OEDO will not declare these petitions official agency records nor will it make them publicly available. Those steps will be carried out by the assigned office as described below. (c)

Office Action (B)

Upon receipt, office management will assign the petition to a petition manager. (1)

The Agency 2.206 Petition Coordinator (appointed by the Director, Division of Licensing Project Management, Office of Nuclear Regulation (NRR)), receives copies of all 2.206 petitions from OEDO and will add them to the 2.206 database. (2)

Petition Manager Action (C)

The petition manager will promptly review the petition and determine whether or not it contains allegations or sensitive information. The timing of this step is particularly important for petitions that are not addressed to the EDO. These documents have been entered into ADAMS through the Document Control Desk (DCD). The documents are initially coded as not publicly available. However, after a specified period of time the documents are released to the public. The delay allows the staff time to review the petition for allegations or other sensitive information. If the petition manager determines that such a document contains allegations or other sensitive information, he or she should immediately contact the DCD to prevent releasing the document to the public. (1)

Petition Manager Action (C) (continued)

Before the petition is released to the public, before the PRB meeting, and in any event within 1 week of receipt of the petition by the assigned office, the petition manager will inform the petitioner by telephone that the 2.206 petition process is a public process in which the petition and all the information in it will be made public. If the petitioner requests anonymity and that the petition not be made public, the petition manager will advise the petitioner that, because of its public nature, the 2.206 process cannot provide protection of the petitioner's identity. In such cases, the petition manager will obtain the agreement of the petitioner as to how the matter will be handled (i.e., as an allegation or not) and document the petitioner's agreement in writing. In cases where the staff identifies certain issues in a petition that it believes are more appropriately addressed using the allegation process, the petition manager will obtain the agreement of the petitioner as to how these issues will be handled (i.e., as an allegation or not) and document the petitioner's agreement in writing. The treatment of all or part of the petition as an allegation may be documented in the allegation acknowledgment letter (see Management Directive (MD) 8.8, "Management of Allegations"). (2)

If the request clearly does not meet the criteria for review as a 10 CFR 2.206 petition, the petition manager will also discuss this issue with the petitioner. The petitioner may be able to help the petition manager better understand the basis for the petition or the petitioner may realize that a 10 CFR 2.206 petition is not the correct forum for the issues raised in the request. Finally, the petition manager will offer the petitioner an opportunity to have one or more representatives give a presentation to the PRB and cognizant supporting staff either by telephone (or videoconference, if available) or in person. This is an opportunity for the petitioner to provide any relevant additional explanation and support for the request. This type of meeting is described in more detail in Part III of this handbook. (3)

After the initial contact with the petitioner, the petition manager will promptly advise the licensee(s) of the petition, send the appropriate licensee(s) a copy of the petition, and ensure that the petition and all subsequent related correspondence are made available to the public. (Note that if the petitioner wishes to have the request handled as an allegation, the request is no longer a 2.206 petition.) Any information related to allegations or other sensitive information that make up a part of the petition will be redacted from copies sent to the licensee or made

Petition Manager Action (C) (continued)

available to the public. For allegations, the petition manager should refer to MD 8.8. As discussed in MD 8.8, allegations must be forwarded to the associated Office Allegations Coordinator expeditiously. MD 8.8 also addresses the referral of wrongdoing issues to the Office of Investigations and the Office of the Inspector General. (4)

See Exhibit 1, Simplified Process Flow Chart and Exhibit 2, Checklist of Petition Manager Actions for further information on petition manager actions. (5)

Part III
Petition Review Board (PRB)

General (A)

Schedule (1)

The assigned office holds a PRB meeting on the 2.206 petition to determine the appropriate schedule as well as how best to respond to the petitioner's concerns. The PRB meeting is normally held within 2 weeks of receipt of the petition. The PRB meeting may be held much sooner if staff decisions are required on short-term immediate actions (e.g., a request to shut down an operating facility or prevent restart of a facility that is ready to restart). In unusual situations, it may not be possible to hold the meeting in time to address immediate actions. In these cases, the staff will decide how the immediate actions will be addressed and obtain appropriate management concurrence as soon as possible. If the staff plans to take an action that is contrary to an immediate action requested in the petition before issuing the acknowledgment letter (such as permitting restart of a facility when the petitioner has requested that restart not be permitted), the petition manager must promptly notify the petitioner by telephone of the pending staff action. (a)

Board Composition (2)

The PRB consists of—(a)

- A PRB chairperson (generally a Senior Executive Service manager) (i)
- A petition manager (ii)
- Cognizant management and staff, as necessary (iii)
- A representative from the Office of Investigations (OI), as needed (iv)
- A representative from the Office of Enforcement (OE) and, for petitions assigned to the Office of Nuclear Regulation (NRR), the NRR Senior Enforcement Coordinator, as needed (v)

General (A) (continued)

Board Composition (2) (continued)

In addition, a representative from the Office of the General Counsel (OGC) will normally participate. (b)

Preparation for the PRB Meeting (B)

The petition manager will provide copies of the petition to PRB and assist in scheduling the review board meeting. The petition manager also will arrange for cognizant technical staff members to attend the meeting, as necessary, and prepare a presentation for the review board. In assigning technical staff members to the petition, management will consider any potential conflict from assigning the same staff who were previously involved with the issue that gave rise to the petition. (1)

The PRB presentation should include—(2)

- A recommendation as to whether or not the petition meets the criteria for review under 10 CFR 2.206 (a)
- A discussion of the safety significance of the issues raised (b)
- Recommendations for any immediate actions (whether requested or not) (c)
- Recommendations on whether or not assistance from OI, OE, or OGC is necessary (d)
- Request confirmation concerning referral to OI or the Office of the Inspector General (OIG), as appropriate (e)
- The proposed schedule, including the review schedule for the affected technical branches (f)

The petition manager also will offer a meeting or teleconference between the petitioner and the PRB before the board reviews the petition. This meeting or teleconference, if held, is an opportunity for the petitioner to provide any relevant additional explanation and support for the request in advance of the PRB's evaluation. The staff will hold this type of meeting if the petitioner desires it. If staff decisions on any of the petitioner's immediate action requests are required before the petitioner's presentation can be scheduled, those decisions will not be delayed. (3)

Preparation for the PRB Meeting (B) (continued)

The petition manager also will invite the licensee to participate in the meeting or teleconference to ensure that it understands the concerns about its facility or activities. The PRB members may ask any questions needed to clarify the petitioner's request. The licensee may also ask questions to clarify the issues raised by the petitioner. The petitioner can choose whether or not to respond to the licensee's questions. Any member of the public may attend (or listen in by telephone for a teleconference) as an observer. Meetings between PRB and the petitioner normally will be held at NRC headquarters in Rockville, Maryland, with provisions for participation by telephone or videoconference. This public meeting or teleconference is separate from the (closed) PRB meeting during which the PRB members develop their recommendations with respect to the petition. (4)

The petition manager will ensure that staff at the meeting or teleconference are aware of the need to protect sensitive information from disclosure. Sensitive information includes safeguards or facility security information, proprietary or confidential commercial information, or information relating to an ongoing investigation of wrongdoing. (5)

If the petitioner chooses to address PRB by telephone, it is not considered a meeting and no public notice is necessary. The petition manager will establish a mutually agreeable time and date and arrange to conduct the teleconference on a recorded line through the NRC Headquarters Operations Center (301-816-5100). The tape recording from the Operations Center is converted to a printed transcript that is treated as a supplement to the petition and is sent to the petitioner and the same distribution as the original petition. The petition manager will make arrangements for transcription service by submitting an NRC Form 587 to the Atomic Safety and Licensing Board Panel or by sending an email to Court Reporter, giving the same information as requested on the Form 587. (6)

If the petitioner chooses to attend in person, the meeting will take place at NRC headquarters at a mutually agreeable time. For the meeting, the petition manager will follow the prior public notice period and other provisions of Management Directive (MD) 3.5, "Public Attendance at Certain Meetings Involving the NRC Staff." However, time constraints associated with this type of meeting will often dictate that the 10-day public notice period described in MD 3.5 will not be

Preparation for the PRB Meeting (B) (continued)

met. MD 3.5 allows for less than 10 days public notice, if necessary, with appropriate management concurrence. The meeting should be noticed as a meeting between the NRC staff, the petitioner, and the licensee (unless the licensee chooses not to participate). The licensee is invited to participate, as in the teleconference described above, and members of the public may attend as observers. The meeting is transcribed and the transcript is treated in the same manner as in the case of a telephone briefing. (7)

At the meeting or teleconference, the chairperson will provide a brief summary of the 2.206 process, the petition, and the purpose of the discussion that will follow. The petitioner may designate a reasonable number of associates to assist him or her in addressing PRB concerning the petition. The petitioner representative(s) will be allowed a reasonable amount of time to articulate the bases for the petition. The NRC staff and the licensee will have an opportunity to ask the petitioner questions for purposes of clarification. The petitioner can choose whether or not to respond to the licensee's questions. PRB may meet in closed session before and/or after the meeting with the petitioner to conduct its normal business. (8)

The requirements for scheduling and holding the petitioner presentation may impact the established time goals for holding the regular PRB meeting and issuing the acknowledgment letter. Any such impacts should be kept to a minimum. (9)

Criteria for Petition Evaluation (C)

The staff will use the criteria discussed in this section to determine whether or not a petition should be considered under 10 CFR 2.206 and whether or not similar petitions should be consolidated.

Criteria for Reviewing Petitions Under 10 CFR 2.206 (1)

The staff will review a petition under the requirements of 10 CFR 2.206 if the request meets all of the following criteria—(a)

- The petition contains an explicit or implicit request for enforcement-related action such as issuing an order modifying, suspending, or revoking a license, issuing a notice of violation, with or without a proposed civil penalty, etc. (i)

Criteria for Petition Evaluation (C) (continued)

Criteria for Reviewing Petitions Under 10 CFR 2.206 (1) (continued)

- The facts that constitute the bases for taking the particular action are specified. The petitioner must provide some element of support beyond the bare assertion. The supporting facts must be credible and sufficient to warrant further inquiry. (ii)

- Acceptance for review under 10 CFR 2.206 will not result in circumventing an available proceeding in which the petitioner is or could be a party. For example, if a petitioner raises an issue that he or she has raised or could raise in a licensing proceeding, the staff will deny the petitioner treatment under 10 CFR 2.206. (iii)

An exception to the first two criteria is any petition to intervene and request for hearing in a licensing proceeding that is referred to the 10 CFR 2.206 process in accordance with 10 CFR 2.1205(l)(2). These referrals may be made when the petition does not satisfy the legal requirements for a hearing or intervention and the Atomic Safety and Licensing Board Panel or the Presiding Officer determines that referral to the 10 CFR 2.206 process is appropriate. For these referrals, the substantive issues in the request for a hearing or intervention will be read as an implicit request for enforcement-related action, thus satisfying the criteria for treatment under the 10 CFR 2.206 review process. (b)

Criteria for Rejecting Petitions Under 10 CFR 2.206 (2)

The staff will not review a petition under 10 CFR 2.206, whether specifically cited or not, under the following circumstances—

- The incoming correspondence does not ask for an enforcement-related action or fails to provide sufficient facts to support the petition but simply alleges wrongdoing, violations of NRC regulations, or existence of safety concerns. The request cannot be simply a general statement of opposition to nuclear power or a general assertion without supporting facts (e.g., the quality assurance at the facility is inadequate). These assertions will be treated as routine correspondence or as allegations which will be referred for appropriate action in accordance with MD 8.8, "Management of Allegations." (a)

Criteria for Petition Evaluation (C) (continued)

Criteria for Rejecting Petitions Under 10 CFR 2.206 (2) (continued)

- The petitioner raises issues that have already been the subject of NRC staff review and evaluation either on that facility, other similar facilities, or on a generic basis, for which a resolution has been achieved, the issues have been dispositioned, and the resolution is applicable to the facility in question. This would include requests to reconsider or reopen a previous enforcement action (including a decision not to initiate an enforcement action) or a director's decision. Such requests will not be treated as a 2.206 petition unless they present significant new information. (b)
- The request is to deny a license application or amendment. This type of request should initially be addressed in the context of the relevant licensing action, not under 10 CFR 2.206. (c)
- The request addresses deficiencies within existing NRC rules. This type of request should be addressed as a petition for rulemaking. (d)

Criteria for Consolidating Petition (3)

Generally, all requests submitted by different individuals will be treated and evaluated separately. When two or more petitions request action against the same licensee, specify essentially the same bases, provide adequate supporting information, and are submitted at about the same time, PRB will consider the benefits of consolidating the petitions against the potential of diluting the importance of any petition and recommend whether or not consolidation is appropriate. The assigned office director will determine whether or not to consolidate the petitions.

PRB Meeting (D)

PRB ensures that an appropriate petition review process is followed. The purposes of the PRB process are to—(1)

- Determine whether or not the petitioner's request meets the criteria for review as a 10 CFR 2.206 petition (see Part III(C) of this handbook) (a)
- Determine whether or not the petitioner should be offered or informed of an alternative process (e.g., consideration of issues as allegations, consideration of issues in a pending license proceeding, or rulemaking). (b)

PRB Meeting (D) (continued)

- Determine whether there is a need for any immediate actions (whether requested or not) (c)
- Establish a schedule for responding to the petitioner so that a commitment is made by management and the technical review staff to respond to the petition in a timely manner (see Part IV of this handbook for guidance regarding schedules) (d)
- Address the possibility of issuing a partial director's decision (e)
- Determine whether or not the petition should be consolidated with another petition (f)
- Determine whether or not referral to OI or OIG is appropriate (g)
- Determine whether or not there is a need for OGC to participate in the review (h)
- Determine whether or not the licensee should be requested to respond to the petition (i)
- Determine whether or not the petition is sufficiently complex that additional review board meetings should be scheduled to ensure that suitable progress is being made (j)

The PRB meeting is a closed meeting, separate from any meeting with the petitioner and the licensee, during which the PRB members develop their recommendations with respect to the petition. At the meeting, the petition manager briefs PRB on the petitioner's request(s), any background information, the need for an independent technical review, and a proposed plan for resolution, including target completion dates. The petition manager, with the assistance of the Agency 2.206 Petition Coordinator, ensures appropriate documentation of all petition recommendations in the summary of the PRB meeting. (2)

The OGC representative provides legal review and advice on 10 CFR 2.206 petitions. OGC may be assigned as the responsible office for the review, if appropriate. (3)

Informing the Petitioner of the Results (E)

After PRB meets, and before issuing the acknowledgment letter, the petition manager will ensure that appropriate levels of management in the assigned office are informed of the board's recommendations and that they concur. The petition manager will then inform the petitioner by telephone as to whether or not the petition meets the criteria for review under 10 CFR 2.206, of the disposition of any requests for immediate action, of how the review will proceed, and that an acknowledgment letter is forthcoming. If the staff plans to take an action that is contrary to an immediate action requested in the petition before issuing the acknowledgment letter, the petition manager must promptly notify the petitioner by telephone of the pending staff action. An example of a contrary action would be if NRC permitted restart of a facility when the petitioner had requested that restart not be permitted. The petitioner will not be advised of any wrongdoing investigation being conducted by OI or OIG. (1)

Meeting with the Petitioner (F)

After informing the petitioner of the pertinent PRB recommendations, the petition manager will offer the petitioner an opportunity to comment on the recommendations. This opportunity will be in the form of a meeting or teleconference between the petitioner and the PRB. If the petitioner accepts this offer, the petition manager will establish a mutually agreeable date for the meeting or teleconference with the petitioner. The petition manager also will request the licensee to participate and will coordinate the schedules and dates with the licensee. The meeting or teleconference should be scheduled so as not to adversely affect the established petition review schedule. (1)

This meeting or teleconference, if held, is an opportunity for the petitioner to provide any relevant additional explanation and support for the request in light of PRB's recommendations. The PRB members may ask any questions needed to clarify the petitioner's request. If staff decisions on any of the petitioner's immediate action requests are required before the petitioner's presentation can be scheduled, those decisions will not be delayed. The format of the meeting or teleconference, application of MD 3.5, transcription, etc., are the same as for a meeting or teleconference held prior to the PRB's review of the petition. (2)

After this discussion, PRB will consider the need to modify any of its recommendations. The final recommendations will be included in the

Meeting with the Petitioner (F) (continued)

acknowledgment letter. The acknowledgment letter will address any comments the petitioner made concerning the initial PRB recommendations and the staff's response. The petitioner will be promptly notified of staff decisions on any immediate action requests. If the petitioner presents significant new information to the staff, PRB may determine that this new information constitutes a new petition that will be treated separately from the initial petition. (3)

The requirements for scheduling and holding the petitioner presentation may impact the established time goals for issuing the acknowledgment letter. Any such impacts should be kept to a minimum. (4)

Response to the Petitioner (G)

After PRB finalizes its recommendations, the petition manager prepares a written response to the petitioner.

Requests That Do Not Meet the Criteria (1)

If PRB, with office-level management concurrence, determines that the petition does not meet the criteria for review as a 10 CFR 2.206 petition, the petition manager then prepares a letter that (1) explains why the request is not being reviewed under 10 CFR 2.206, responds, to the extent possible at that time, to the issues in the petitioner's request, and (3) explains what further actions, if any, the staff intends to take in response to the request (e.g., treat it as an allegation or routine correspondence). See Exhibit 3 for an example letter. (a)

The petition manager will attach the original petition and any enclosure(s) to the Reading File copy of the letter. (b)

Requests That Meet the Criteria (2)

If the PRB finds that the petition meets the criteria for review as a 10 CFR 2.206 petition, the petition manager prepares an acknowledgment letter and associated Federal Register notice (see Exhibits 4 and 5). The letter should acknowledge the petitioner's efforts in bringing issues to the staff's attention. If the petition contains a request for immediate action by the NRC, such as a request for immediate suspension of facility operation until final action is taken on

Response to the Petitioner (G) (continued)

Requests That Meet the Criteria (2) (continued)

the request, the acknowledgment letter must explain the staff's response to the immediate action requested. If the immediate action is denied, the staff must explain the basis for the denial in the acknowledgment letter. (a)

The petition manager ensures that a copy of this management directive and of the pamphlet "Public Petition Process," prepared by the Office of Public Affairs, are included with the acknowledgment letter. The acknowledgment letter also should include the name and telephone number of the petition manager, identify the technical staff organizational units that will participate in the review, and provide the planned schedule for the staff's review. A copy of the acknowledgment letter must be sent to the appropriate licensee and the docket service list(s). (b)

The petition manager will attach the original 2.206 petition and any enclosure(s) to the Reading File copy of the acknowledgment letter. (c)

In rare cases the staff may be prepared to respond to the merits of the petition immediately. In such a case, the staff can combine the functions of the acknowledgment letter and the director's decision into one document. A similar approach would be taken in combining the associated Federal Register notices. (d)

Sending Documents to the Petitioner (H)

If the PRB determines that the request is a 2.206 petition, then the petition manager will—

- Place the petitioner on distribution for all relevant NRC correspondence to the licensee to ensure that the petitioner receives copies of all NRC correspondence with the licensee pertaining to the petition. (1)
- Add the petitioner to the service list(s) for the topic or affected licensee(s) for all headquarters and regional documents on the affected dockets. (2)

Sending Documents to the Petitioner (H) (continued)

- Request the licensee to send copies of any future correspondence related to the petition to the petitioner, with due regard for proprietary, safeguards, and other sensitive information. The licensee should continue to send these documents to the petitioner for 90 days after the director's decision is issued. (3)

- To the extent that he or she is aware of such documents, ensure that the petitioner is placed on distribution for other NRC correspondence relating to the issues raised in the petition, including relevant generic letters or bulletins that are issued during the pendency of the NRC's consideration of the petition. This does not include NRC correspondence or documentation related to an OI or OIG investigation, which will not be released outside NRC without the approval of the Director, OI or OIG, respectively. (4)

Part IV

Petition Review Activities

Reviewing the Petition (A)

Interoffice Coordination (1)

The petition manager coordinates all information required for the petition review. The petition manager also advises his or her management of the need for review and advice from the Office of the General Counsel (OGC) regarding a petition in special cases. When appropriate, an Associate Director in the Office of Nuclear Regulation, a Division Director in the Office of Nuclear Material Safety and Safeguards, or the Director of the Office of Enforcement, requests OGC involvement through the OGC special counsel assigned to 2.206 matters. (a)

All information related to a wrongdoing investigation by the Office of Investigations (OI) or the Office of the Inspector General (OIG), or even the fact that an investigation is being conducted, will receive limited distribution within NRC and will not be released outside NRC without the approval of the Director, OI or OIG, respectively (see Management Directive (MD) 8.8). Within NRC, access to this information is limited to those having a need-to-know. Regarding a 2.206 petition, the assigned office director, or his designee, maintains copies of any documents required and ensures that no copies of documents related to an OI or OIG investigation are placed in the docket file, the agencywide documents access and management systems (ADAMS), or the Public Document Room (PDR), without the approval of the Director, OI or OIG, respectively. (b)

Reviewing the Petition (A) (continued)

Request for Licensee Input (2)

If appropriate, the petition manager will request the licensee to provide a response to the NRC on the issues specified in the petition, usually within 30 days. This staff request will usually be made in writing. The petition manager will advise the licensee that the NRC will place the licensee's response in the PDR and provide the response to the petitioner. (a)

Unless necessary for NRC's proper evaluation of the petition, the licensee should avoid using proprietary or personal privacy information that requires protection from public disclosure. If such information is necessary to properly respond to the petition, the petition manager ensures the information is protected in accordance with 10 CFR 2.790. (b)

Technical Review Meeting With the Petitioner (3)

A technical review meeting with the petitioner will be held whenever the staff believes that such a meeting (whether requested by the petitioner, the licensee, or the staff) would be beneficial to the staff's review of the petition. Meeting guidance is provided in MD 3.5. The petition manager will ensure that the meeting does not compromise the protection of sensitive information. A meeting will not be held simply because the petitioner claims to have additional information and will not present it in any other forum.

Additional Petition Review Board (PRB) Meetings (4)

Additional PRB meetings may be scheduled for complex issues. Additional meetings also may be appropriate if the petition manager finds that significant changes must be made to the original plan for the resolution of the petition.

Schedule (B)

The goal is to issue the proposed director's decision for comment within 120 days after issuing the acknowledgment letter. The proposed director's decision for uncomplicated petitions should be issued in less than 120 days. The Office of the Executive Director for Operations (OEDO) tracks the target date, and any change of the date requires approval by the EDO. The petition manager monitors the progress of any OI investigation and related enforcement actions. Enforcement

Schedule (B) (continued)

actions that are prerequisites to a director's decision should be expedited and completed in time to meet the 120-day goal. Investigations by OI and OIG associated with petitions should be expedited to the extent practicable. However, the goal of issuing the proposed director's decision for comment within 120 days after issuing the acknowledgment letter applies only to petitions whose review schedules are within the staff's control. If issues in a petition are the subject of an investigation by OI or OIG, or a referral to the Department of Justice (DOJ), or if NRC decides to await a Department of Labor decision, the clock for the 120-day goal is stopped for the portion of the petition awaiting disposition by those organizations. The clock will start again when the staff receives the results of the investigation. If the staff can respond to some portions of the petition without the results of the investigation, then a partial director's decision should be issued within the original 120 days. When the staff receives the results of the investigation, it will promptly develop and issue a final director's decision. See Part V of this handbook for a discussion of partial director's decisions. (1)

If the director's decision cannot be issued in 120 days for other reasons (e.g., very complex issues), the assigned division director determines the need for an extension of the schedule and requests the extension from the EDO. In addition, the petition manager will promptly contact the petitioner to explain the reason(s) for the delay and will maintain a record of such contact. (2)

Keeping the Petitioner Informed (C)

The petition manager ensures that the petitioner is notified at least every 60 days of the status of the petition, or more frequently if a significant action occurs. The petition manager makes the bimonthly status reports by telephone. The petition manager should speak directly to the petitioner or otherwise confirm that the petitioner has received the status report. The petition manager keeps up-to-date on the status of the petition so that reasonable detail can be provided with the status reports. However, the status report to the petitioner will not indicate—

- An ongoing OI or OIG investigation, unless approved by the Director, OI or OIG (1)
- The referral of the matter to DOJ (2)
- Enforcement action under consideration (3)

Updates to Management and the Public (D)

On a monthly basis, the Agency 2.206 Petition Coordinator will contact all petition managers reminding them to prepare a status report regarding 2.206 petitions in their offices. The petition managers should email the status report for each open petition, with the exception of sensitive information as described below, to Petition. The Agency 2.206 Petition Coordinator combines all the status reports, including staff performance metrics for petitions processed under 10 CFR 2.206 for the current year, in a monthly report to the EDO from the Associate Director, Project Licensing and Technical Analysis, and provides a copy of the report to the Document Control Desk (PUBLIC) and the Web operator for placement on the NRC Home Page. (1)

If the status of the petition includes sensitive information that may need to be protected from disclosure, the petition manager will so indicate in the email and in the status report itself. Sensitive information includes safeguards or facility security information, proprietary or confidential commercial information, information relating to an ongoing investigation of wrongdoing or enforcement actions under development, or information about referral of matters to the DOJ, and should be handled in accordance with MD 12.6, "NRC Sensitive Unclassified Information Security Program." The Agency 2.206 Petition Coordinator will protect this information from disclosure by placing the affected status report(s) in a separate enclosure to the status report, clearly marking the status report to the EDO, and redacting the sensitive information from the version of the report that is made public. (2)

The NRC Home Page provides the up-to-date status of pending 2.206 petitions, director's decisions issued, and other related information. The NRC external home page (*http://www.nrc.gov*) is accessible via the World Wide Web, and documents related to petitions may be found on the "Public Participation & School Programs" page under "Petitions to Modify, Suspend, or Revoke a License Under 10 CFR 2.206." Director's decisions are also published in NRC Issuances (NUREG-0750). (3)

Part V

The Director's Decision

Content and Format (A)

The petition manager prepares the director's decision on the petition and the associated *Federal Register* notice for the office director's consideration, including coordination with the appropriate staff supporting the review. See Exhibits 6 and 7 for a sample director's decision with cover letter and the associated *Federal Register* notice, respectively. The petition manager will also prepare letters to the petitioner and the licensee that will enclose the proposed director's decision and request comments on it (see Exhibit 8). These letters will be routed with the director's decision for concurrence. (1)

The director's decision will clearly describe the issues raised by the petitioner, provide a discussion of the safety significance of the issues, and clearly explain the staff's disposition for each issue. The petition manager will bear in mind the broader audience (i.e., the public) when preparing the explanation of technical issues. Refer to the NRC Plain Language Action Plan, available on the internal web page, for further guidance. In addition, the petition manager will ensure that any documents referenced in the decision are available to the public. If a partial director's decision was issued previously, the final director's decision will refer to, but does not have to repeat the content of, the partial director's decision. After management's review, the petition manager incorporates any proposed revisions in the decision. (2)

If appropriate, the decision and the transmittal letter for the director's decision or partial director's decision should acknowledge that the petitioner identified valid issues and should specify the corrective actions that have been or will be taken to address these issues, notwithstanding that some or all of the petitioner's specific requests for action have not been granted. (3)

Content and Format (A) (continued)

If the Office of Investigations (OI) has completed an investigation before either granting or denying the petition and the wrongdoing matter has been referred to the Department of Justice (DOJ), the petition manager will contact OI and the Office of Enforcement (OE) to coordinate NRC's actions. For petitions assigned to the Office of Nuclear Regulation (NRR), the petition manager also will contact the NRR Senior Enforcement Coordinator. The staff may need to withhold action on the petition in keeping with the Memorandum of Understanding with DOJ. (4)

If the results of a wrongdoing investigation by OI in relation to the petition are available, the staff will consider these results in completing the action on the petition. OI must concur in the accuracy and characterization of the OI findings and conclusions that are used in the decision. (5)

The petition manager will obtain OE's review of the director's decision for potential enforcement implications. For petitions assigned to NRR, the petition manager also will provide a copy of the director's decision to the NRR Senior Enforcement Coordinator. (6)

Final Versus Partial Director's Decisions (B)

The staff will consider preparing a partial director's decision when some of the issues associated with the 2.206 petition are resolved in advance of other issues and if significant schedule delays are anticipated before resolution of the entire petition. (1)

The format and content of a partial director's decision is the same as that of a final director's decision and an accompanying *Federal Register* notice would still be prepared (see Exhibit 7). However, the partial director's decision should clearly indicate those portions of the petition that remain open, explain the reasons for the delay to the extent practical, and provide the staff's schedule for the final director's decision. If all of the issues in the petition can be resolved together, then the final director's decision will address all of the issues. (2)

Granting the Petition (C)

Once the staff has determined that the petition will be granted, in whole or in part, the petition manager will prepare a "Director's Decision Under 10 CFR 2.206" for the office director's signature. The decision will explain the bases upon which the petition has been granted and identify the actions that NRC staff has taken or will take to grant all or that portion of the petition. The decision also should describe any

Granting the Petition (C) (continued)

actions the licensee took voluntarily that address aspects of the petition. The Commission may grant a request for enforcement-related action, in whole or in part, and also may take other action to satisfy the concerns raised by the petition. A petition is characterized as being granted in part when the NRC grants only some of the actions requested and/or takes actions other than those requested to address the underlying problem. If the petition is granted in full, the director's decision will explain the bases for granting the petition and state that the Commission's action resulting from the director's decision is outlined in the Commission's order or other appropriate communication. If the petition is granted in part, the director's decision will clearly indicate the portions of the petition that are being denied and the staff's bases for the denial.

Denying the Petition (D)

Once the staff has determined that the petition will be denied, the petition manager will prepare a "Director's Decision Under 10 CFR 2.206" for the office director's signature. The decision will explain the bases for the denial and discuss all matters raised by the petitioner in support of the request.

Issuing the Proposed Director's Decision for Comment (E)

After the assigned office director has concurred in the proposed director's decision, the petition manager will issue the letters to the petitioner and the licensee enclosing the proposed director's decision and requesting comments on it. The letters, with the enclosure, will be made available to the public through ADAMS. (1)

The intent of this step is to give the petitioner and licensee an opportunity to identify errors in the decision. The letters will request a response within a set period of time, nominally two weeks. The amount of time allowed for the response may be adjusted depending on circumstances. For example, for very complex technical issues it may be appropriate to allow more time for the petitioner and licensee to develop their comments. The letters should be transmitted to the recipients electronically or by fax, if possible. (2)

Comment Disposition (F)

The petition manager will evaluate any comments received on the proposed decision, obtaining the assistance of the technical staff, as appropriate. Although the staff requested comments from only the petitioner and the licensee, comments from other sources (e.g., other members of the public) may be received. These additional comments must be addressed in the same manner as the comments from the petitioner and licensee. A copy of the comments received and the associated staff responses will be included in the final director's decision. An attachment to the decision will generally be used for this purpose. (1)

If no comments are received on the proposed decision, the petition manager will include in the final decision a reference to the letters that requested comments and a statement that no comments were received. (2)

If the comments from the petitioner include new information, the petition review board will be reconvened to determine whether to treat the new information as part of the current petition or as a new petition. (3)

Issuing the Director's Decision (G)

A decision under 10 CFR 2.206 consists of a letter to the petitioner, the director's decision, and the *Federal Register* notice. The petition manager will obtain a director's decision number (i.e., DD-YY-XX) from the Office of the Secretary (SECY). A director's decision number is assigned to each director's decision in numerical sequence. This number is included on the letter to the petitioner, the director's decision, and the *Federal Register* notice. Note that the director's decision itself is not published in the *Federal Register*; only the notice of its availability, containing a summary of the substance of the decision, is published (see Exhibits 6 and 7). (1)

The petition manager will prepare a letter to transmit the director's decision to the petitioner and also prepare the associated *Federal Register* notice. If the staff's response to the petition involves issuing an order, the petition manager will prepare a letter to transmit the order to the licensee. The petition manager also will include a copy of the order in the letter to the petitioner. When the director's decision has been signed, the petition manager will promptly send a copy of the decision, electronically or by fax if possible, to the petitioner. Copies of the

Issuing the Director's Decision (G) (continued)

director's decision and *Federal Register* notice that are sent to the licensee and individuals on the service list(s) are dispatched simultaneously with the petitioner's copy. Before dispatching the director's decision (or partial decision), the petition manager will inform the petitioner of the imminent issuance of the decision and the substance of the decision. (2)

The assigned office director will sign the cover letter, the director's decision, and the *Federal Register* notice. After the notice is signed, the staff forwards it to the Rules and Directives Branch, Office of Administration (ADM/DAS/RDB), for transmittal to the Office of the *Federal Register* for publication. The staff shall NOT include a copy of the director's decision in the package that is sent to RDB. RDB only forwards the *Federal Register* notice to be published. (3)

Administrative Issues (H)

The administrative staff of the assigned office will review the 10 CFR 2.206 package before it is dispatched and determine appropriate distribution. The administrative staff also will immediately (same day) hand -carry the listed material to the following offices (in the case of the petitioner, promptly dispatch the copies.)—(1)

- Rulemakings and Adjudications staff, SECY (a)
  - Five copies of the director's decision (i)
  - Two courtesy copies of the entire decision package including the distribution and service lists (ii)
  - Two copies of the incoming petition and any supplement(s) (iii)
- Petitioner (b)
  - Signed original letter (i)
  - Signed director's decision (ii)
  - A copy of the *Federal Register* notice (iii)
- Chief, Rules and Directives Branch (c)
  - Original signed *Federal Register* notice only (do not include the director's decision) (i)

Administrative Issues (H) (continued)

- Five paper copies of the notice (ii)

The staff must fulfill these requirements promptly because the Commission has 25 calendar days from the date of the decision to determine whether or not the director's decision should be reviewed. (2)

Although 2.206 actions are controlled as green tickets, the staff should use the following guidelines when distributing copies internally and externally—(3)

- When action on a 2.206 petition is completed, the petition manager will ensure that all publicly releasable documentation is placed in the Public Document Room and the agency document control system. (a)
- The assigned office will determine the appropriate individuals and offices to include on the distribution list. (b)

The administrative staff of the assigned office will complete the following actions within 2 working days of issuance of the director's decision: (4)

- Provide one paper copy of the director's decision to the special counsel in the Office of the General Counsel assigned to 2.206 matters. (a)
- Email the final version of the director's decision to the NRC Issuances (NRCI) Project Officer, Publishing Services Branch (PSB), Office of the Chief Information Officer (OCIO). If other information (opinions, partial information (such as errata), or footnotes) is included in the email, clearly identify the director's decision number at the beginning of each file to avoid administrative delays and improve the technical production schedule for proofreading, editing, and composing the documents. In addition, send two paper copies of the signed director's decision to the NRCI Project Officer. (b)
- Email a signed, dated, and numbered copy of the director's decision to NRCWEB for posting on the NRC Home Page. (c)

Administrative Issues (H) (continued)

The petition manager will prepare headnotes, which are a summary of the petition, consisting of no more than a few paragraphs describing what the petition requested and how the director's decision resolved or closed out the petition. The petition manager will email the headnotes to the NRCI Project Officer, PSB, OCIO, for monthly publication in the NRC Issuances, NUREG-0750. The headnotes should reach PSB before the 5th day of the month following the issuance of the director's decision. (5)

Finally, the petition manager will remove the petitioner's name from distribution and/or the service list(s) 90 days after issuance of the director's decision. (6)

Commission Actions (I)

SECY will inform the Commission of the availability of the director's decision. The Commission, at its discretion, may determine to review the director's decision within 25 days of the date of the decision and may direct the staff to take some other action than that in the director's decision. If the Commission does not act on the director's decision within 25 days (unless the Commission extends the review time), the director's decision becomes the final agency action and SECY sends a letter to the petitioner informing the petitioner that the Commission has taken no further action on the petition.

Exhibit 1

Simplified 2.206 Process Flow Chart

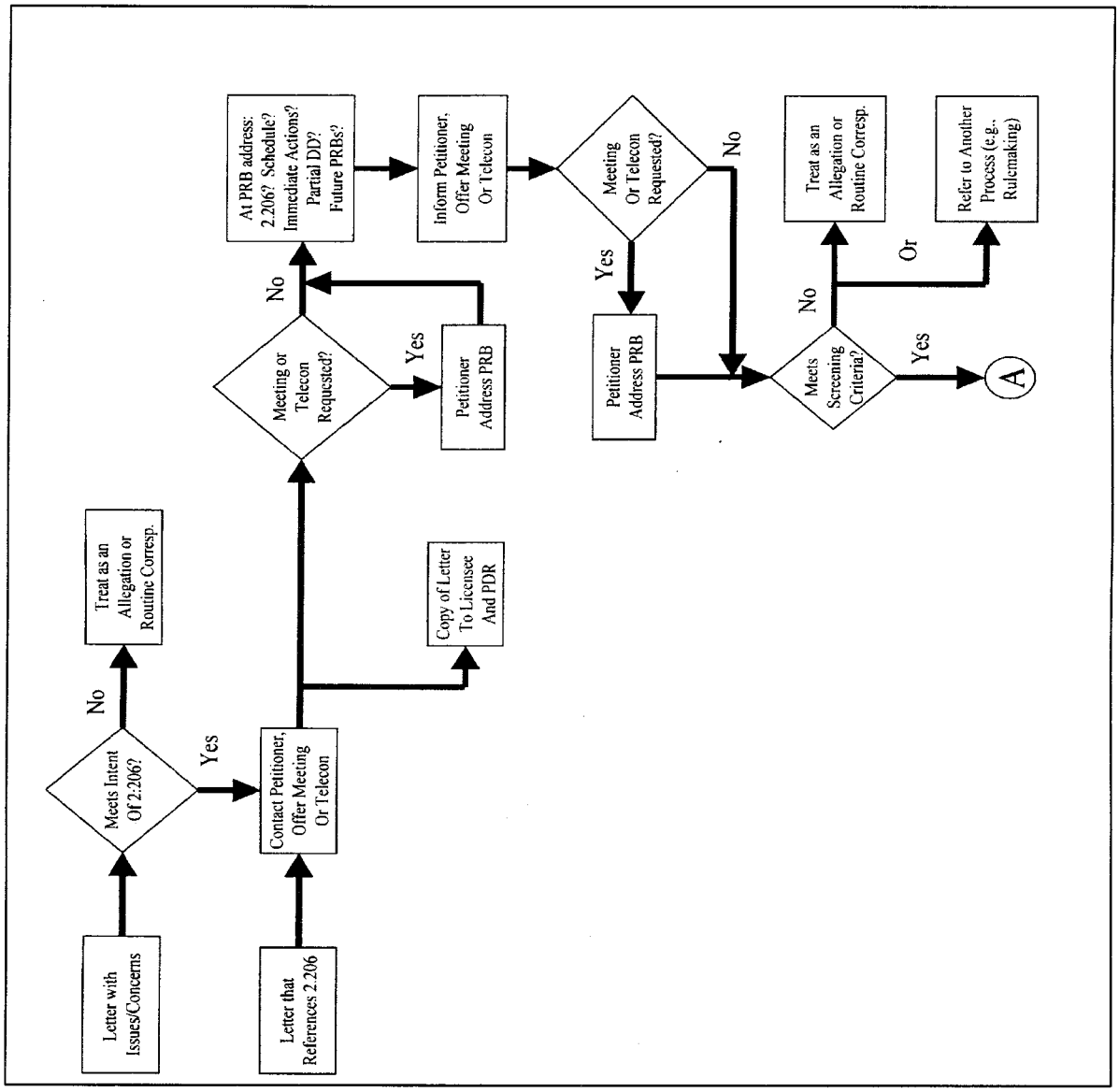

Exhibit 1

Simplified 2.206 Process Flow Chart (continued)

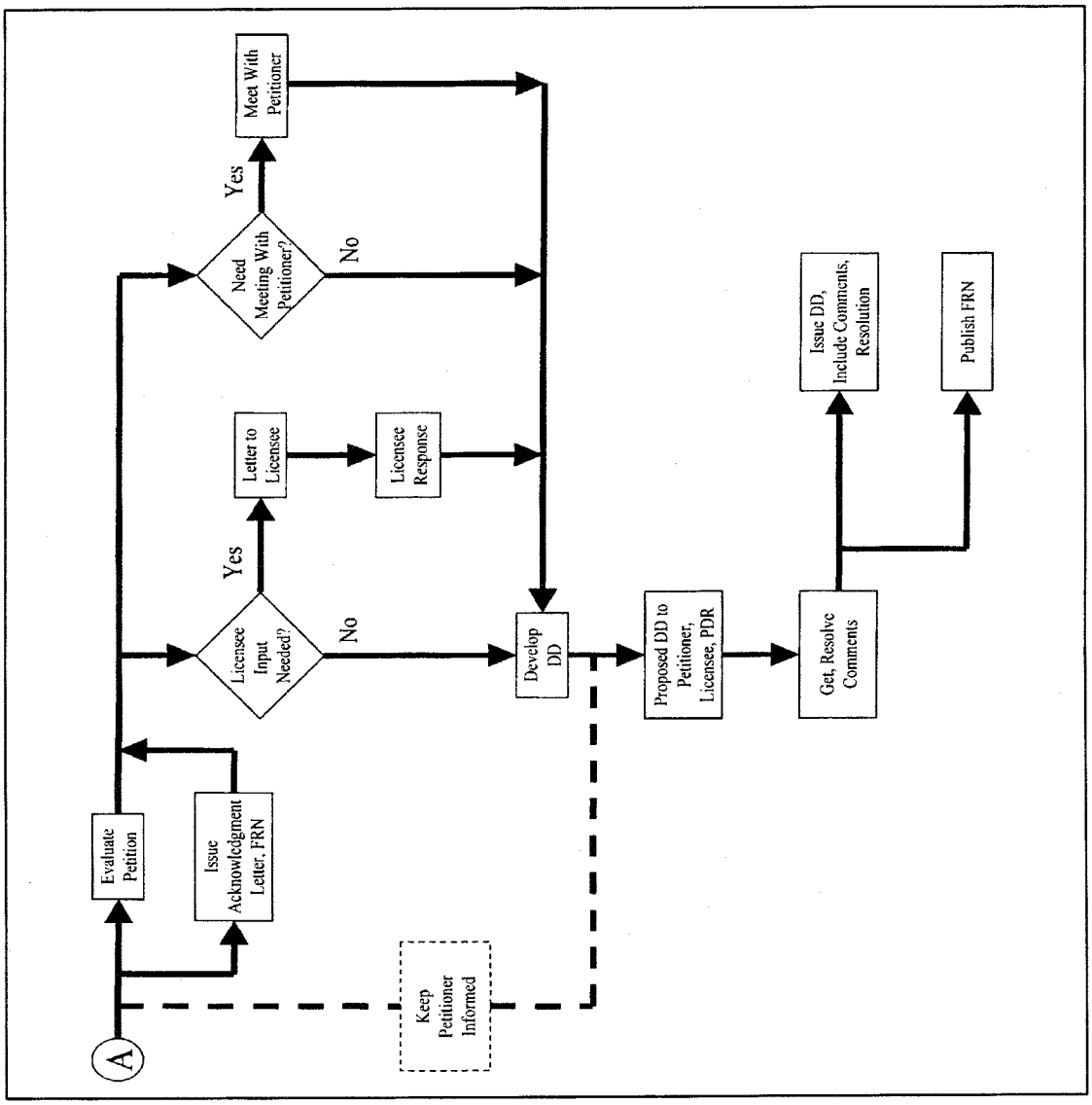

Exhibit 2
Petition Manager Checklist

☐ Review the petition for allegations and sensitive material. Also determine whether or not any immediate actions requested require expedited staff response.

☐ Contact the petitioner and discuss the public nature of the process. Offer a pre-PRB meeting or telecon to the petitioner.

☐ Send a copy of the incoming petition to the licensee and Document Control Desk (Public), with redactions as appropriate.

☐ If a pre-PRB meeting or telecon is held, notice it (meeting only) and arrange for it to be recorded and transcribed.

☐ Prepare a PRB presentation. Include the following information:

- Does the request meet the criteria for review under 2.206?
- What are the issues and their significance?
- Is there a need for immediate action (whether requested or not)?
- Is there a need for OE, OI, OIG, or OGC involvement?
- What is your recommended approach to the response?
- What schedule is proposed?

☐ Prepare a PRB presentation. Include the following information:

☐ Arrange for the PRB meeting. Address the PRB.

☐ Ensure assigned office management agrees with the PRB recommendations.

☐ Inform the petitioner of the PRB recommendations. Offer a post-PRB meeting.

☐ If a post-PRB meeting or telecon is held, notice it (meeting only) and arrange for it to be recorded and transcribed.

☐ Arrange a follow-up PRB meeting to resolve petitioner comments

☐ Ensure assigned office management agrees with the PRB final recommendations.

☐ If the assigned office's management agrees with the PRB that the request is not a 2.206 petition, send a letter to the petitioner, treat any open issues under the appropriate process (e.g., rulemaking). Stop here.

☐ If the assigned office's management agrees with the PRB that the request is a 2.206 petition, continue with this checklist.

Exhibit 2 (continued)

☐ Add petitioner to appropriate service list(s).

☐ Issue acknowledgment letter and associated *Federal Register* notice.

☐ If licensee input is needed, send a written request.

☐ If further petitioner input is needed, arrange for a technical review meeting.

☐ Make periodic status updates to the petitioner.

☐ Prepare the director's decision, addressing:

- Each of the petitioners' issues
- The safety significance of each issue
- The staff's evaluation of each issue and actions taken

☐ Ensure all referenced documents are available to the public

☐ Send the proposed director's decision to the petitioner and licensee for comment, with a copy to the PDR.

☐ Include comments received and their resolution in the final director's decision.

☐ Prepare the *Federal Register* notice for the director's decision.

☐ As soon as the director's decision is signed:

- Inform the petitioner of the substance of the decision and that issuance is imminent.
- Hand-carry two full copies of the package (including the incoming(s) and distribution and service lists) and five additional copies to the Rulemakings and Adjudication Staff in SECY
- Hand-carry the original signed *Federal Register* notice (ONLY) and five copies to the Rules and Directives branch. Do NOT include the director's decision in this package.
- Immediately dispatch the signed original letter and decision and a copy of the *Federal Register* notice to the petitioner.

☐ Within 2 working days of issuing the Director's decision:

- Provide a copy of the director's decision to the OGC special counsel assigned to 2.206 matters.
- Email and send two paper copies of the director's decision to the NRC Issuances Project Officer in OCIO.
- Email a signed, dated, and numbered copy of the director's decision to NRCWEB.
- Email headnotes on the petition to the NRC Issuances Project Officer in OCIO.

Exhibit 3

Sample Closure Letter for Requests That are not 2.206 Petitions

[Petitioner's Name]
[Petitioner's Address]

Dear Mr. :

Your petition dated [**insert date**] and addressed to the [**insert addressee**] has been referred to the Office of [insert] pursuant to 10 CFR 2.206 of the Commission's regulations. You request [**state petitioner's requests**]. As the basis for your request, you state that [**insert basis for request**].

You met with our petition review board (PRB) on [**insert date**] to discuss your petition. The results of that discussion have been considered in the PRB's determination regarding your request for immediate action and whether or not the petition meets the criteria for consideration under 10 CFR 2.206. **OR** Our petition review board has reviewed your submittal. The staff has concluded that your submittal does not meet the criteria for consideration under 10 CFR 2.206 because [**explain our basis, addressing all aspects of the submittal and making reference to the appropriate criteria in this MD**].

[**Provide the staff's response, if available, to the issues raised.**] AND/OR [**Explain what further actions, if any, the staff intends to take in response to the request (e.g., treat it as an allegation or routine correspondence**).]

Thank you for bringing these issues to the attention of the NRC.

Sincerely,

[Insert Division Director's Name]

[Office of [insert Office Name]

Docket Nos. [ ]

cc: [**Licensee (w/copy of incoming 2.206 request) & Service List**]

Exhibit 4

Sample Acknowledgment Letter

[Petitioner's Name]
[Petitioner's Address]

Dear Mr. :

Your petition dated [**insert date**] and addressed to the [**insert addressee**] has been referred to me pursuant to 10 CFR 2.206 of the Commission's regulations. You request [**state petitioner's requests**]. As the basis for your request, you state that [**insert basis for request**]. I would like to express my sincere appreciation for your effort in bringing these matters to the attention of the NRC.

You met with our Petition Review Board (PRB) on [**insert date**] to discuss your petition. The results of that discussion have been considered in the PRB's determination regarding [**your request for immediate action and in establishing**] the schedule for the review of your petition. Your request to [**insert request for immediate action**] at [**insert facility name**] is [**granted or denied**] because [**staff to provide explanation**].

As provided by Section 2.206, we will take action on your request within a reasonable time. I have assigned **[first and last name of petition manager]** to be the petition manager for your petition. Mr. **[last name of petition manager]** can be reached at **[301-415-extension of petition manager]** Your petition is being reviewed by **[organizational units]** within the Office of [**name of appropriate Office**]. **If necessary, add**: I have referred to the NRC Office of the Inspector General (OIG) those allegations of NRC wrongdoing contained in your petition. I have enclosed for your information a copy of the notice that is being filed with the Office of the *Federal Register* for publication. I have also enclosed for your information a copy of Management Directive 8.11 "Review Process for 10 CFR 2.206 Petitions," and the associated brochure NUREG/BR-0200, "Public Petition Process," prepared by the NRC Office of Public Affairs.

Sincerely,

[**Office Director**]

Enclosures: *Federal Register* Notice
Management Directive 8.11
NUREG/BR-0200

cc: [**Licensee (w/copy of incoming 2.206 request) & Service List**]

Exhibit 5

[7590–01–P]

Sample *Federal Register* Notice

U.S. NUCLEAR REGULATORY COMMISSION

Docket No(s).

License No(s).

[Name of Licensee]

RECEIPT OF REQUEST FOR ACTION UNDER 10 CFR 2.206

Notice is hereby given that by petition dated [insert date], [insert petitioner's name] (petitioner) has requested that the NRC take action with regard to [insert facility or licensee name]. The petitioner requests [state petitioner's requests].

As the basis for this request, the petitioner states that [**state petitioner's basis for request**].

The request is being treated pursuant to 10 CFR 2.206 of the Commission's regulations. The request has been referred to the Director of the Office of [**insert action office**]. As provided by Section 2.206, appropriate action will be taken on this petition within a reasonable time. The petitioner met with the [**insert action office**] petition review board on [**insert date**] to discuss the petition. The results of that discussion were considered in the board's determination regarding [**the petitioner's request for immediate action and in establishing**] the schedule for the review of the petition. [**If necessary, add**] By letter dated _____ , the Director (**granted or denied**) petitioner's request for [**insert request for immediate action**] at [**insert facility/licensee name**]. A copy of the petition is available for inspection at the Commission's Public Document Room at 2120 L Street, NW. (Lower Level), Washington, DC 20555-0001, and electronically from the ADAMS Public Library component on the NRC Web site, *http://www.nrc.gov* (the Electronic Reading Room).

FOR THE NUCLEAR REGULATORY COMMISSION

[**Office Director**]

Dated at Rockville, Maryland

This _____ day of _____, 200X.

Exhibit 6

Sample Director's Decision and Cover Letter

[Insert petitioner's name & address]

Dear **[insert petitioner's name]**:

This letter responds to the petition you filed with [**EDO or other addressee of petition**] pursuant to Section 2.206 of Title 10 of the *Code of Federal Regulations* (10 CFR 2.206) on [**date of petition**] as supplemented on [**dates of any supplements**]. In your petition you requested that the NRC [**list requested actions**].

On [**date of acknowledgment letter**] the NRC staff acknowledged receiving your petition and stated pursuant to 10 CFR 2.206 that your petition was being referred to me for action and that it would be acted upon within a reasonable time. You were also told that [**staff response to any request for immediate action**].

You met with the petition review board on [**date(s) of the pre- and/or post-PRB meeting(s)**] to clarify the bases for your petition. The transcript(s) of this/these meeting(s) was/were treated as (a) supplement(s) to the petition and are available for public inspection at the Commission's Public Document Room, the Gelman Building, 2120 L Street, NW., Washington, DC, and electronically from the ADAMS Public Library component on the NRC Web site, *http://www.nrc.gov* (the Electronic Reading Room).

By letter dated [**insert date**], the NRC staff requested [**name of licensee**] to provide information related to the petition. [**Name of licensee**] responded on [**insert date**] and the information provided was considered by the staff in its evaluation of the petition..

In your petition you stated that [**summarize the issues raised**]. [**Briefly summarize the safety significance of the issues and the staff's response.**]

The NRC issued a Partial Director's Decision (DD-YY-XX) dated [**insert**] which [**explain what aspects of the petition were addressed**]. [**Explain which issues remained to be addressed in this director's decision and briefly explain the reason for the delay on these issues.**]

The staff sent a copy of the proposed director's decision to you and to [**licensee(s)**] for comment on [**date**]. You responded with comments on [**date**] and the licensee responded on [**date**]. The comments and the staff's response to them are included in the director's decision. OR The staff did not receive any comments on the proposed director's decision.

Exhibit 6 (continued)

[**Summarize the issues addressed in this director's decision and the staff's response.**]

A copy of the Director's Decision (DD-YY-XX) will be filed with the Secretary of the Commission for the Commission to review in accordance with 10 CFR 2.206(c). As provided for by this regulation, the decision will constitute the final action of the Commission 25 days after the date of the decision unless the Commission, on its own motion, institutes a review of the decision within that time. [**The documents cited in the enclosed decision are available for public inspection at the Commission's Public Document Room, the Gelman Building, 2120 L Street, NW., Washington, DC, and electronically from the ADAMS Public Library component on the NRC Web site, *http://www.nrc.gov* (the Electronic Reading Room) (cite any exceptions involving proprietary or other protected information)**].

I have also enclosed a copy of the notice of "Issuance of Final Director's Decision Under 10 CFR 2.206" that has been filed with the Office of the *Federal Register* for publication.

[**If appropriate, acknowledge the efforts of the petitioner in bringing the issues to the attention of the NRC.**] Please feel free to contact [**petition manager name and number**] to discuss any questions related to this petition.

Sincerely,

[Insert Office Director's Name]

Docket Nos. [ ]

Enclosures: Director's Decision YY-XX
Federal Register Notice

DD-YY-XX

UNITED STATES OF AMERICA
NUCLEAR REGULATORY COMMISSION
OFFICE OF [INSERT]
[**Office Director Name**], Director

In the Matter of	)	Docket No(s).
	)	
	)	
[**LICENSEE NAME**]	)	License No(s).
	)	
	)	
([**Plant or facility name(s)**])	)	(10 CFR 2.206)

I. Introduction

By letter dated [**insert date**], as supplemented on [**dates of supplements**], [**petitioner names and, if applicable, represented organizations**] filed a Petition pursuant to Title 10 of the *Code of Federal Regulations*, Section 2.206. The petitioner(s) requested that the U.S. Nuclear Regulatory Commission (NRC) take the following actions: [**list requests**]. The bases for the requests were [**describe**].

In a letter dated [**insert**], the NRC informed the Petitioners that their request for [**list immediate actions requested**] was approved/denied and that the issues in the Petition were being referred to the Office of [**insert**] for appropriate action.

The Petitioner(s) met with the (**assigned office abbreviation**) petition review board on [**date(s) of the pre- and/or post-PRB meeting(s)**] to clarify the bases for the Petition. The transcript(s) of this/these meeting(s) was/were treated as (a) supplement(s) to the petition and are available for public inspection at the Commission's Public Document Room, the Gelman Building, 2120 L Street, NW., Washington, DC, and electronically from the ADAMS Public Library component on the NRC Web site, *http://www.nrc.gov* (the Electronic Reading Room).

By letter dated [**insert date**], the NRC staff requested [**name of licensee**] to provide information related to the petition. [**Name of licensee**] responded on [**insert date**] and the information provided was considered by the staff in its evaluation of the petition.

The NRC issued a Partial Director's Decision (DD-YY-XX) dated [**insert**] which [**explain what aspects of the petition were addressed**]. [**Explain which issues remained to be**

addressed in this director's decision and briefly explain the reason for the delay on these issues.]

The NRC sent a copy of the proposed director's decision to the Petitioner and to [**licensee(s)**] for comment on [**date**]. The Petitioner responded with comments on [**date**] and the licensee(s) responded on [**date**]. The comments and the NRC staff's response to them are included in the director's decision. OR The staff did not receive any comments on the proposed director's decision.

II. Discussion

[**Discuss the issues raised, the significance of the issues (or lack thereof), and the staff's response with supporting bases. Acknowledge any validated issues, even if the staff or the licensee decided to take corrective actions other than those requested by the petitioner. Clearly explain all actions taken by the staff or the licensee to address the issues, even if these actions were under way or completed before the petition was received. This discussion must clearly present the staff response to all of the valid issues so that it is clear that they have been addressed.**]

III. Conclusion

[**Summarize the staff's conclusions with respect to the issues raised and how they have been, or will be, addressed.**]

As provided in 10 CFR 2.206(c), a copy of this Final Director's Decision will be filed with the Secretary of the Commission for the Commission to review. As provided for by this regulation, the decision will constitute the final action of the Commission 25 days after the date of the decision unless the Commission, on its own motion, institutes a review of the decision within that time.

Dated at Rockville, Maryland, this [**insert date**] day of [**insert month, year**].

[**Office director's name**], Director
Office of [**insert**]

Exhibit 7

[7590–01–P]

Sample *Federal Register* Notice for Director's Decision

U.S. NUCLEAR REGULATORY COMMISSION

Docket No(s).

License No(s).

[Name of Licensee]

NOTICE OF ISSUANCE OF DIRECTOR'S DECISION UNDER 10 CFR 2.206

Notice is hereby given that the Director, **[name of office]**, has issued a director's decision with regard to a petition dated **[insert date]**, filed by **[insert petitioner's name]**, hereinafter referred to as the "petitioner." **[The petition was supplemented on [insert date, include transcripts from meeting(s) with the PRB]**. The petition concerns the operation of the **[insert facility or licensee name]**.

The petition requested that **[insert facility or licensee name]** should be **[insert request for enforcement-related action]**. **[If necessary, add]** The petitioner also requested that a public meeting be held to discuss this matter in the Washington, DC, area.

As the basis for the **[insert date]** request, the petitioner raised concerns stemming from **[insert petitioner's supporting basis for the request]**. The **[insert petitioner's name]** considers such operation to be potentially unsafe and to be in violation of Federal regulations. In the petition, a number of references to **[insert references]** were cited that the petitioner believes prohibit operation of the facility with **[insert the cause for the requested enforcement-related action]**.

The petition of **[insert date]** raises concerns originating from **[insert summary information on more bases/rationale/discussion and supporting facts used in the disposition of the petition and the development of the director's decision]**.

Exhibit 7 (continued)

On [**insert date**], the petitioner [**and the licensee**] met with the staff's petition review board. On **[insert date of public meeting]**, the NRC conducted a meeting regarding **[insert facility or licensee name]**. The(se) meeting(s) gave the petitioner and the licensee an opportunity to provide additional information and to clarify issues raised in the petition.

The NRC sent a copy of the proposed Director's Decision to the Petitioner and to [**licensee(s)**] for comment on [**date**]. The Petitioner responded with comments on [**date**] and the licensee(s) responded on [**date**]. The comments and the NRC staff's response to them are included in the Director's Decision. OR The staff did not receive any comments on the proposed Director's Decision.

The Director of the Office of **[name of office]** has determined that the request(s), to require **[insert facility or licensee name]** to be **[insert request for enforcement-related action]**, be **[granted/denied]**. The reasons for this decision are explained in the director's decision pursuant to 10 CFR 2.206 **[Insert DD No.]**, the complete text of which is available for public inspection at the Commission's Public Document Room, the Gelman Building, 2120 L Street, NW. (Lower Level), Washington, DC 20555-0001, and via the NRC Home Page (*http://www.nrc.gov*) on the World Wide Web, under the "Public Participation & School Programs" icon.

A copy of the director's decision will be filed with the Secretary of the Commission for the Commission's review in accordance with 10 CFR 2.206 of the Commission's regulations. As provided for by this regulation, the director's decision will constitute the final action of the Commission 25 days after the date of the decision, unless the Commission, on its own motion, institutes a review of the director's decision in that time.

Dated at Rockville, Maryland, this **[insert date]** day of **[insert month, year]**.

FOR THE NUCLEAR REGULATORY COMMISSION

Original Signed By

[Insert Office Director's Name]
Office of **[insert Office Name]**

Exhibit 8

Sample Letters Requesting Comments on the Proposed Director's Decision

(**Note**: For clarity, separate letters will need to be sent to the petitioner and the licensee. This sample provides guidance for both letters.)

[**Insert petitioner's address**]

Dear [**Insert petitioner's name**]

Your petition dated [**insert date**] and addressed to the [**insert addressee**] has been reviewed by the NRC staff pursuant to 10 CFR 2.206 of the Commission's regulations. The staff's proposed director's decision on the petition is enclosed. I request that you provide comments to me on any portions of the decision that you believe involve errors. The staff is making a similar request of the licensee. The staff will then review any comments provided by you and the licensee and consider them before finalizing the director's decision.

Please provide your comments by [**insert date, nominally 2 weeks from the date of this letter**].

Sincerely,

[**Signed by Division Director**]

Docket Nos. []

cc w/o encl: [**Service List**]

[**Insert licensee's address**]

Dear [**Insert licensee's name**]

By letter dated [**insert date**], [**insert name of petitioner**] submitted a petition pursuant to 10 CFR 2.206 of the Commission's regulations with respect to [**insert name(s) of affected facilities**]. The petition has been reviewed by the NRC staff and the staff's proposed director's decision on the petition is enclosed. I request that you provide comments to me on any portions of the decision that you believe involve errors. The staff is making a similar request of the petitioner. The staff will then review any comments provided by you and the petitioner and consider them before finalizing the director's decision.

Exhibit 8 (continued)

Please provide your comments by [**insert date, nominally 2 weeks from the date of this letter**].

Sincerely,

[**Signed by Division Director**]

Docket Nos. [ ]

cc w/encl: [**Service List**]

[FR Doc. 00–18921 Filed 7–26–00; 8:45 am]
BILLING CODE 7590–01–C

Federal Register

Thursday,
July 27, 2000

Part V

Department of Education

34 CFR Parts 682 and 685

Federal Family Education Loan Program and William D. Ford Federal Direct Loan Program; Proposed Rule

DEPARTMENT OF EDUCATION

34 CFR Parts 682 and 685

RIN 1845–AA16

Federal Family Education Loan (FFEL) Program and William D. Ford Federal Direct Loan Program

AGENCY: Office of Postsecondary Education, Education.

ACTION: Notice of proposed rulemaking.

SUMMARY: The Secretary proposes to amend the Federal Family Education Loan (FFEL) Program regulations and the William D. Ford Federal Direct Loan (Direct Loan) Program regulations. The Secretary is amending these regulations to reduce administrative burden for program participants, provide benefits to borrowers, and protect the taxpayers' interests.

DATES: We must receive your comments on or before September 11, 2000.

ADDRESSES: Address all comments about these proposed regulations to Ms. Pamela A. Moran, U.S. Department of Education, P.O. Box 23272, Washington, DC 20026–3272. If you prefer to send your comments through the Internet, use the following address: ffelnprm@ed.gov.

You must include the term ''Team 1 FFEL'' in the subject line of your electronic message.

If you want to comment on the information collection requirements, you must send your comments to the Office of Management and Budget at the address listed in the Paperwork Reduction Act section of this preamble. You may also send a copy of these comments to the Department representative named in this section.

FOR FURTHER INFORMATION CONTACT: For the FFEL Program, Mr. George Harris, or for the Direct Loan Program, Mr. Jon Utz; U.S. Department of Education, 400 Maryland Avenue, SW., room 3045, ROB–3, Washington, DC 20202–5449. Telephone: (202) 708–8242. If you use a telecommunications device for the deaf (TDD) you may call the Federal Information Relay Service (FIRS) at 1–800–877–8339.

Individuals with disabilities may obtain this document in an alternative format (e.g., Braille, large print, audiotape, or computer diskette) on request to the contact person listed under **FOR FURTHER INFORMATION CONTACT**.

SUPPLEMENTARY INFORMATION:

Invitation To Comment

We invite you to submit comments regarding these proposed regulations. To ensure that your comments have maximum effect in developing the final regulations, we urge you to identify clearly the specific section or sections of the proposed regulations that each of your comments addresses and to arrange your comments in the same order as the proposed regulations.

We invite you to assist us in complying with the specific requirements of Executive Order 12866 and its overall requirement of reducing regulatory burden that might result from these proposed regulations. Please let us know of any further opportunities we should take to reduce potential costs or increase potential benefits while preserving the effective and efficient administration of the programs.

During and after the comment period, you may inspect all public comments about these proposed regulations in room 3045, ROB–3, 7th and D Streets, SW., Washington, DC, between the hours of 8:30 a.m. and 4 p.m., Eastern time, Monday through Friday of each week except Federal holidays.

Assistance to Individuals With Disabilities in Reviewing the Rulemaking Record

On request, we will supply an appropriate aid, such as a reader or print magnifier, to an individual with a disability who needs assistance to review the comments or other documents in the public rulemaking record for these proposed regulations. If you want to schedule an appointment for this type of aid, you may call (202) 205–8113 or (202) 260–9895. If you use a TDD, you may call the Federal Information Relay Service at 1–800–877–8339.

Negotiated Rulemaking

Section 492 of the Higher Education Act of 1965, as amended (HEA) requires that, before publishing any proposed regulations for programs under Title IV of the HEA, the Secretary obtain public involvement in the development of the proposed regulations. After obtaining advice and recommendations, the Secretary must conduct a negotiated rulemaking process to develop the proposed regulations. All published proposed regulations must conform to agreements resulting from the negotiated rulemaking process unless the Secretary reopens the negotiated rulemaking process or provides a written explanation to the participants in that process why the Secretary has decided to depart from the agreements.

To obtain public involvement in the development of the proposed regulations, we held listening sessions in Washington, DC, Atlanta, Chicago, and San Francisco. Four half-day sessions were held on September 13 and 14, 1999, in Washington, DC. In addition, we held three regional sessions in Atlanta on September 17, in Chicago on September 24, and in San Francisco on September 27, 1999. The Office of Student Financial Assistance's Customer Service Task Force also conducted listening sessions to obtain public involvement in the development of our regulations.

We then published a notice in the **Federal Register** (64 FR 73458, December 30, 1999) to announce our intention to establish two negotiated rulemaking committees to draft proposed regulations affecting Title IV of the HEA. The notice requested nominations for participants from anyone who believed that his or her organization or group should participate in this negotiated rulemaking process. The notice announced that we would select participants for the process from the nominees of those organizations or groups. The notice also announced a tentative list of issues that each committee would negotiate.

Once the two committees were established, they met to develop proposed regulations over the course of several months, beginning in February. The proposed regulations contained in this NPRM reflect the final consensus of Negotiating Committee I (committee), which was made up of the following members:

- American Association of Collegiate Registrars and Admissions Officers
- American Association of Cosmetology Schools
- American Association of State Colleges and Universities (in coalition with American Association of Community Colleges)
- American Council on Education
- Career College Association
- Coalition of Higher Education Assistance Organizations
- Consumer Bankers Association
- Education Finance Council
- Education Loan Management Resources
- Legal Services
- National Association of College and University Business Officers
- National Association of Independent Colleges and Universities
- National Association of State Universities and Land-Grant Colleges
- National Association of Student Financial Aid Administrators
- National Association of Student Loan Administrators
- National Council of Higher Education Loan Programs
- National Direct Student Loan Coalition

- Sallie Mae, Inc.
- Student Loan Servicing Alliance
- The College Fund/United Negro College Fund
- United States Department of Education
- United States Student Association
- US Public Interest Research Group

As stated in the committee protocols, consensus means that there must be no dissent by any member in order for the committee to be considered to have reached agreement. Consensus was reached on all of the proposed regulations in this document.

Significant Proposed Regulations

We discuss substantive issues under the sections of the proposed regulations to which they pertain. Generally, we do not address proposed regulatory provisions that are technical or otherwise minor in effect. The proposed regulations address changes that are specific to the FFEL Program and changes that are common to both the FFEL and Direct Loan programs.

FFEL and Direct Loan Program Changes

Sections 682.210 and 685.204—Deferment

Current Regulations: In the FFEL and Direct Loan programs, the current regulations and policy provide that, except in the case of an in-school deferment, a deferment may not be granted for a period beginning more than 6 months before the date the lender (or the Department on a Direct Loan) receives the request and the documentation required for the deferment.

For a borrower who requests an unemployment deferment on the basis of providing documentation of employer contacts, current regulations require the name of the employer contacted, the employer's address and telephone number, and the name or title of the person contacted.

Proposed Regulations: Proposed § 682.210(a)(5) would remove the 6-month limitation from all deferment categories except for the unemployment deferment. No change to the Direct Loan regulations is needed because the explicit 6-month limitation is not included in the Direct Loan regulations and only applies to Direct Loans through a cross-reference to the FFEL deferment regulations.

The proposed regulations would also modify the requirement that loan holders obtain specific documentation of employment contact from borrowers who request an unemployment deferment. These requirements only apply to borrowers who request continuations of their deferments based on their attempts to get employment, and not to borrowers who apply for an initial period of unemployment deferment or to those borrowers who qualify based on their eligibility for unemployment benefits. These changes will allow loan holders to accept alternative documentation that provides sufficient information to support a borrower's claim that he or she is seeking employment as required. No change to the Direct Loan regulations is needed because the explicit unemployment deferment rules are not included in the Direct Loan regulations. Instead, unemployment deferments in the Direct Loan Program are granted using the same provisions that exist in the FFEL unemployment deferment regulations.

Reasons: On October 29, 1999 (64 FR 58622), the Department eliminated the 6-month limitation for retroactive application of a deferment for the in-school deferment only. During this year's negotiated rulemaking, the committee agreed to make the deferment rules more consistent for borrowers and for the parties that administer the FFEL Program by removing the 6-month limitation from all other deferment categories except the unemployment deferment.

The 6-month limitation on retroactively granting deferments was intended, in part, to motivate borrowers to make timely deferment requests and provide the necessary deferment documentation. However, the committee concluded that the limitation does not serve that purpose. Instead, the limitation causes confusion and complexity for borrowers. Moreover, the limitation reduces the usefulness of deferments for borrowers who are delinquent on payments and are trying to avoid default. The 6-month limitation means that the application of a deferment to which the borrower is entitled might still leave the borrower significantly delinquent. We hope the elimination of this limitation will allow loan holders to better assist borrowers to avoid default.

The committee considered removing the 6-month limitation on retroactive application of the unemployment deferment but decided not to do so. Under the current regulations, (including the rule that the deferment may not begin earlier than 6 months before the date the lender receives the borrower's deferment request) a borrower can be granted an initial period of unemployment deferment without documenting a search for full-time employment. This provision, unique to the unemployment deferment for borrowers who do not qualify based on their eligibility for unemployment benefits, is based on the understanding that borrowers may not immediately begin a job search on the date they become unemployed. However, it means that, unlike in other cases, the borrower is able to get a deferment without proving that he or she meets all the conditions for the deferment.

In light of this situation, the committee decided to retain the 6-month retroactive limit for an unemployment deferment that was granted based on an ongoing search for employment. The Secretary believes the integrity of the FFEL and Direct Loan programs would be jeopardized if there was no retroactive limit for granting this kind of unemployment deferment.

Several of the non-federal negotiators also proposed to modify the types of documentation required from a borrower to show that he or she had conducted a diligent search for employment. The committee discussed situations in which job announcements do not specify some or most of the information required under current regulations, such as the name of the employer, or the name and title of the person to be contacted. In response to these concerns, the committee agreed to propose regulations that include less prescriptive language so that borrowers could provide various forms of employment contact documentation acceptable to the loan holder.

Sections 682.210(s)(6) and 685.204(b)(3)—Economic Hardship Deferment

Statute: Section 435(o)(1) of the HEA uses the borrower's ''adjusted gross income'' as the income measurement to determine if a borrower would have an economic hardship in repaying a loan, but also authorizes the Department to establish additional criteria.

Current Regulations: Current regulations only refer to the borrower's total monthly gross income in identifying the income that is used when determining a borrower's eligibility for an economic hardship deferment.

Proposed Regulations: The committee agreed that the regulations should be modified to incorporate the adjusted gross income standard included in the HEA. Accordingly, in these proposed regulations, § 682.210(s)(6) would be revised so that a borrower could qualify for an economic hardship deferment based on either his or her monthly gross income from all sources, or a monthly amount calculated as one-twelfth of the borrower's adjusted gross income, as recorded on the borrower's most

recently filed Federal income tax return. No change to the Direct Loan regulations is needed because the Direct Loan regulations implement the statutory requirements through a cross-reference to the FFEL economic hardship deferment regulations.

Reasons: The committee noted that section 435(o)(1)(B) of the HEA used ''adjusted gross income'' when referring to a borrower's income. It was agreed that the regulations should add the statutory standard to the regulations while retaining the existing regulatory standard to provide greater flexibility for any borrower to document his or her income. The committee believed that some borrowers found it difficult to document their total monthly income from all sources, as is required under current § 682.210(s)(6)(x). The committee believed that a borrower should be given the option of using the adjusted gross income amount from the borrower's most recent Federal income tax return as a simplified way to demonstrate that he or she qualifies for an economic hardship deferment.

Sections 682.402 and 685.214—False Certification Discharge

Current Regulations: The FFEL and Direct Loan regulations on false certification discharges have the same rules with respect to a discharge based on an improper determination of the student's ability-to-benefit (ATB). Under those rules, if a valid ATB determination was not made, the borrower can qualify for a false certification loan discharge if the student is unable to obtain employment in the occupation for which the training was intended, or if the student finds a job only after receiving training that was not provided by the school that certified the borrower's loan application. Current regulations in both programs require borrowers who want a false certification discharge to file an application for the discharge.

Proposed Regulations: With regard to a false certification discharge based upon an ATB issue, all requirements related to a student's employment after leaving school are being removed from the FFEL and Direct Loan regulations. In addition, for both programs, the proposed rules would permit an ATB false certification discharge to be granted without an application if it is determined that the borrower qualifies based on information in the possession of the Secretary or guaranty agency.

Reasons: On November 16, 1999, the U.S. Court of Appeals for the District of Columbia, in *Jordan* v. *Riley* (99–5024), ruled invalid the employment attempt provisions in the false certification discharge regulations. The Court of Appeals found that section 437(c) of the HEA does not authorize us to include criteria in the regulations that attempt to measure whether, despite any deficient ATB certification, the student nevertheless had the ability to benefit from the training offered by the school. The Court concluded that a student's post-training employment experience is irrelevant to the truth or falsity of the certification. Rather, the Court ruled that the HEA only authorizes us to determine whether the school properly tested the student and the student passed the test. We have decided to extend the Court's ruling to all borrowers, not just those covered by the Court's ruling. Thus, we will no longer consider the student's employment or employment attempts in resolving false certification discharge claims.

We (or a guaranty agency) occasionally learn of information that strongly suggests that all borrowers in a certain category would likely qualify for a false certification discharge. For example, we might determine that all students at a specific school during a certain time period had incorrect ATB determinations. In the interest of assisting those borrowers, (many of whom may be unaware of the possibility of receiving a loan discharge), the committee decided that it would be appropriate to discharge those loans without an individual discharge request from each borrower. On October 29, 1999 (64 FR 58622), we issued regulations that authorized the granting of closed school loan discharges in certain cases without individual requests from each borrower. These proposed regulations would extend that approach to false certification discharges.

During the negotiations, the committee agreed that a borrower should be able to receive a false certification discharge based on an invalid ATB determination, even if the school was not directly involved in the invalid testing or other determination of the student's ATB because the invalid testing was done by an independent test administrator. Although we believed that this was consistent with the current regulations, to avoid potential confusion, we agreed to remove the words ''the school's'' in the reference to invalid testing of a student's ATB in § 682.402(e)(3)(ii) and § 685.214(c)(1). The committee agreed that the regulatory language that would remain after that deletion was sufficient to apply to all invalid ATB determinations made, regardless of who made them.

FFEL Changes

Section 682.410—Fiscal, Administrative, and Enforcement Requirements

Current Regulations: In collecting on defaulted loans, a guaranty agency currently must follow the regulatory requirements contained in § 682.410(b). Those regulations state, with a great amount of specificity, precisely when certain collection activities must occur in collecting a defaulted loan. They also restrict a guaranty agency's use of litigation in collecting defaulted loans. The collection rules in current § 682.410(b) were developed when guaranty agencies used Federal money to pay for their collection activities and were designed to require certain collection activities while ensuring the proper use of Federal funds.

Proposed Regulations: We would generally no longer require a guaranty agency to perform routine collection activities (collection letters and telephone calls) within the specific time periods, prescribed in the current regulations. The guaranty agency could develop its own collection strategy, as long as, for a non-paying borrower, the guaranty agency performed at least one activity every 180 days to collect the debt, locate the borrower (if necessary), or determine if the borrower has the means to repay the debt. The proposed regulations would also eliminate the general prohibition against a guaranty agency suing borrowers who owe defaulted loans. The proposed regulations would permit a guaranty agency to file a civil suit against a borrower to compel repayment if the borrower had no garnishable wages or the guaranty agency determined that the borrower had sufficient attachable assets or non-garnishable income that could be used to repay the debt, and the use of litigation would be more effective in collection of the debt.

The proposed regulations would require a guaranty agency to undertake a small number of required activities and borrower notifications that the committee believed would protect borrowers and comply with other applicable laws. The proposed regulations would require that, within 45 days after paying a lender's default claim, the guaranty agency must send a notice advising the borrower that a default claim has been paid and that the borrower has an opportunity to enter into a repayment agreement with the guaranty agency and to request an administrative review of the status of the debt. In addition, the guaranty agency must notify the borrower that he or she may have certain legal rights in

the collection of debts, and that the borrower may wish to contact a counselor or lawyer regarding those rights. The guaranty agency must also warn the borrower that it may: (1) Report the default to credit bureaus (if it does so, the guaranty agency must notify the borrower of that action and that the borrower's credit rating may thereby have been damaged); (2) assess collection costs against the borrower; (3) administratively garnish the borrower's wages; (4) file a civil suit to compel repayment; (5) offset the borrower's State and Federal income tax refunds and other payments made by the Federal Government to the borrower; (6) assign the loan to the Secretary in accordance with § 682.409; and (7) take other lawful collection means to collect the debt, at the discretion of the guaranty agency.

Reasons: As a result of changes made to the HEA in 1998, a guaranty agency now pays for collection activities on defaulted loans with money in its ''Operating Fund,'' which is the property of the guaranty agency. Thus, guaranty agencies now have strong financial incentives to collect defaults in a cost effective manner. A guaranty agency that is an effective collector of defaulted loans will be financially better off than one that is an ineffective collector. The committee believed that these financial incentives eliminate the need for the prescriptive collection activities found in the current regulations (other than the borrower protection provisions discussed under ''proposed regulations''). The current sequence of required phone calls and letters, and the general restrictions against litigation, served a purpose when guaranty agencies funded their collection efforts with Federal Reserve Fund money. The new financing structure for guaranty agencies created by the 1998 Amendments to the HEA reduced the need for those prescriptive regulations.

Guaranty agencies have frequently expressed the view that they could do a better job in collecting defaults if they were free to develop their own collection strategies unhindered by the current default due diligence rules. The proposed regulations would give the agencies that flexibility.

Section 682.414—Records, Reports, and Inspection Requirements for Guaranty Agency Programs.

Current Regulations: Guaranty agencies generally are required to maintain records for 5 years after a loan has been paid in full or determined to be uncollectible.

Proposed Regulations: The length of time a guaranty agency must retain required loan records for loans paid in full by the borrower would be reduced from 5 years to 3 years from the date the loan is repaid in full by the borrower. For all other loans for which a guaranty agency receives payment in full from any other source (for example, payoff of a loan by a consolidation loan), or for those loans that are not paid in full, the 5-year retention period would continue to be in effect. In particular cases, we could require a guaranty agency to retain records beyond the 3-year or 5-year minimum periods.

Reasons: On October 29, 1999 (64 FR 58622), we issued regulations that generally reduced record retention requirements for lenders in the FFEL Program from 5 years to 3 years from the date the loan is repaid in full by the borrower. Several non-federal negotiators involved in this year's negotiated rulemaking session proposed a similar reduction in guaranty agency record retention requirements for defaulted loans paid in full by borrowers as a result of guaranty agency collection efforts. The committee generally agreed that reducing the record retention period to 3 years in these limited cases would not diminish program integrity and borrower protections, and would greatly reduce the costs of maintaining records for this portion of the guaranty agency's portfolio.

Executive Order 12866

1. Potential Costs and Benefits

Under Executive Order 12866, we have assessed the potential costs and benefits of this regulatory action.

The potential costs associated with the proposed regulations are those resulting from statutory requirements and those we have determined as necessary for administering these programs effectively and efficiently. Elsewhere in this **SUPPLEMENTARY INFORMATION** section we identify and explain burdens specifically associated with information collection requirements. See the heading Paperwork Reduction Act of 1995.

In assessing the potential costs and benefits—both quantitative and qualitative—of this regulatory action, we have determined that the benefits would justify the costs.

Summary of Potential Costs and Benefits

These proposed regulations benefit borrowers and institutions by simplifying and providing additional flexibility in administering loan deferments. The proposed regulations also provide additional flexibility by permitting false certification discharges without an application for qualified borrowers on the basis of information possessed by the guaranty agency or the Secretary. Further flexibility is provided to guaranty agencies by proposed changes that simplify collection requirements by making them less prescriptive, and reduce the required retention of records from 5 years to 3 years for loans fully repaid by borrowers.

2. Clarity of the Regulations

Executive Order 12866 and the President's Memorandum of June 1, 1998 on ''Plain Language in Government Writing'' require each agency to write regulations that are easy to understand.

The Secretary invites comments on how to make these proposed regulations easier to understand, including answers to questions such as the following:

- Are the requirements in the proposed regulations clearly stated?
- Do the proposed regulations contain technical terms or other wording that interferes with their clarity?
- Does the format of the proposed regulations (grouping and order of sections, use of headings, paragraphing, etc.) aid or reduce their clarity?
- Would the proposed regulations be easier to understand if we divided them into more (but shorter) sections? (A ''section'' is preceded by the symbol ''§ '' and a numbered heading; for example, *§ 682.210 Deferment.*)
- Could the description of the proposed regulations in the **SUPPLEMENTARY INFORMATION** section of this preamble be more helpful in making the proposed regulations easier to understand? If so, how?
- What else could we do to make the proposed regulations easier to understand?

Send any comments that concern how the Department could make these proposed regulations easier to understand to the person listed in the **ADDRESSES** section of the preamble.

Regulatory Flexibility Act Certification

The Secretary certifies that these proposed regulations would not have a significant economic impact on a substantial number of small entities. These proposed regulations would affect guaranty agencies and lenders that participate in the FFEL Program, as well as individual FFEL and Direct Loan borrowers. The U.S. Small Business Administration Size Standards define institutions as ''small entities'' if they are for-profit or nonprofit institutions with total annual revenue below

$5,000,000 or if they are institutions controlled by governmental entities with populations below 50,000.

The 36 guaranty agencies are State and private nonprofit entities that act as agents of the Federal government, and as such are not considered ''small entities'' for this purpose. Individual FFEL and Direct Loan borrowers also are not considered ''small entities'' under the Regulatory and Flexibility Act. A number of the over 4,000 lenders participating in the FFEL Program meet the definition of ''small entities.'' The Secretary has determined that the proposed regulations will not have a significant economic impact on these lenders.

The Secretary invites comments on this determination, and welcomes proposals on any significant alternatives that would satisfy the same legal and policy objectives of these proposals while minimizing the economic impact on small entities.

Paperwork Reduction Act of 1995

Sections 682.210, 682.402, 682.414, 685.204, and 685.214 contain information collection requirements. Under the Paperwork Reduction Act of 1995 (44 U.S.C. 3507(d)), the Department of Education has submitted a copy of these sections to the Office of Management and Budget (OMB) for its review.

Collection of Information: Federal Family Education Loan Program and William D. Ford Federal Direct Loan Program. Deferment documentation requirements.

These proposed regulations would affect the potential ability of borrowers to qualify for an economic hardship deferment. A borrower could qualify for an economic hardship deferment based on one-twelfth of the borrower's adjusted gross income, as recorded on the borrower's most recently filed Federal income tax return, instead of the borrower's total monthly gross income as under current regulations. The total burden hour reduction (based on approximately 6 minutes per application) is not expected to be substantial because of the small number of borrowers who would choose this option.

Collection of Information: Federal Family Education Loan Program and William D. Ford Federal Direct Loan Program. False certification discharge of a borrower's loan obligation without an application form.

These proposed regulations would affect the potential loan discharge for borrowers if the Secretary or the guaranty agency, with the Secretary's permission, determines that a borrower qualifies for a discharge based on information in the Secretary's or guaranty agency's possession. In these cases, the borrower would not need to submit a false certification loan discharge application to receive a discharge. Included in this category would be FFEL borrowers who have received false certification discharges of their Federal Direct Loans based on the same qualifying conditions, and Direct Loan borrowers who have received the same discharges of their FFEL loans. The total burden hour reduction (based on approximately 30 minutes per application) is not expected to be substantial because of the small number of borrowers who would not be required to submit a false certification loan discharge application.

Collection of Information: Reduction in the length of time a guaranty agency must retain loan records.

These proposed regulations would affect all FFEL guaranty agencies by reducing the length of time a guaranty agency must retain required loan records for loans paid in full by the borrower from 5 years to 3 years from the date the loan is repaid in full by the borrower. For all other loans for which the guaranty agency receives payment in full from any other source (for example, payoff of a loan by a consolidation loan), or for those loans that are not paid in full, the 5-year retention period will continue to be in effect, except that in particular cases, the Secretary may require the retention of records beyond the 3-year or 5-year minimum periods. The total burden hour reduction is not expected to be substantial because most of the burden in record retention is associated with the initial assembling and transfer of records to a retention system.

If you want to comment on the information collection requirements, please send your comments to the Office of Information and Regulatory Affairs, OMB, room 10235, New Executive Office Building, Washington, DC 20503; Attention: Desk Officer for U.S. Department of Education. You may also send a copy of these comments to the Department representative named in the **ADDRESSES** section of this preamble.

We consider your comments on these proposed collections of information in—

- Deciding whether the proposed collections are necessary for the proper performance of our functions, including whether the information will have practical use;
- Evaluating the accuracy of our estimate of the burden of the proposed collections, including the validity of our methodology and assumptions;
- Enhancing the quality, usefulness, and clarity of the information we collect; and
- Minimizing the burden on those who must respond. This includes exploring the use of appropriate automated, electronic, mechanical, or other technological collection techniques or other forms of information technology; *e.g.,* permitting electronic submission of responses.

OMB is required to make a decision concerning the collections of information contained in these proposed regulations between 30 and 60 days after publication of this document in the **Federal Register**. Therefore, to ensure that OMB gives your comments full consideration, it is important that OMB receives the comments within 30 days of publication. This does not affect the deadline for your comments to us on the proposed regulations.

Intergovernmental Review

The FFEL Program and the William D. Ford Federal Direct Loan Program are not subject to Executive Order 12372 and the regulations in 34 CFR part 79.

Assessment of Educational Impact

The Secretary particularly requests comments on whether these proposed regulations would require transmission of information that any other agency or authority of the United States gathers or makes available.

Electronic Access to This Document

You may view this document in text or Adobe Portable Document Format (PDF) on the Internet at the following sites:

http://ocfo.ed.gov/fedreg.htm
http://ifap.ed.gov/csb_html/fedlreg.htm

To use the PDF, you must have the Adobe Acrobat Reader Program with Search, which is available free at the first of the previous sites. If you have questions about using the PDF, call the U.S. Government Printing Office (GPO), toll free, at 1–888–293–6498; or in the Washington, D.C. area at (202) 512–1530.

Note: The official version of this document is the document published in the **Federal Register**. Free Internet access to the official edition of the **Federal Register** and the Code of Federal Regulations is available on GPO Access at: http://www.access.gpo.gov/nara/index.html.

(Catalog of Federal Domestic Assistance Number 84.032 Federal Family Education Loan Program)

List of Subjects in 34 CFR Parts 682 and 685

Administrative practice and procedure, Colleges and universities,

Education, Loan programs—education, Reporting and recordkeeping requirements, Student aid, Vocational education.

Dated: July 19, 2000.

Richard W. Riley,

Secretary of Education.

For the reasons discussed in the preamble, the Secretary proposes to amend parts 682 and 685 of Title 34 of the Code of Federal Regulations as follows:

PART 682—FEDERAL FAMILY EDUCATION LOAN (FFEL) PROGRAM

1. The authority citation for part 682 continues to read as follows:

Authority: 20 U.S.C. 1071 to 1087–2, unless otherwise noted.

2. Section 682.210 is amended by:

A. Revising paragraph (a)(5).

B. Revising paragraph (h)(2)(i).

C. Removing the words ''of up to one year at a time'' from paragraph (s)(6) introductory text.

D. Revising paragraphs (s)(6)(iii), (iv), (v), (ix), and (x).

The revisions read as follows:

§ 682.210 Deferment.

(a) * * *

(5) An authorized deferment period begins on the date that the holder determines is the date that the condition entitling the borrower to the deferment first existed, except that an initial unemployment deferment as described in paragraph (h)(2) of this section cannot begin more than 6 months before the date the holder receives a request and documentation required for the deferment.

* * * * *

(h) * * *

(2) * * *

(i) Describing the borrower's diligent search for full-time employment during the preceding 6 months, except that a borrower requesting an initial period of unemployment deferment, which may not exceed 6 months prospectively, is not required to describe his or her search for full-time employment. To continue an unemployment deferment, the borrower's written certification must include information showing that the borrower made at least six diligent attempts to secure employment to support the period covered by the certification. This information could be the name of the employer contacted and the employer's address and telephone number, or other information acceptable to the holder showing that the borrower made six diligent attempts to obtain full-time employment;

* * * * *

(s) * * *

(6) * * *

* * * * *

(iii) Is working full-time and has a monthly income that does not exceed the greater of (as calculated on a monthly basis)—

(A) The minimum wage rate described in section 6 of the Fair Labor Standards Act of 1938; or

(B) An amount equal to 100 percent of the poverty line for a family of two, as determined in accordance with section 673(2) of the Community Services Block Grant Act.

(iv) Is working full-time and has a Federal education debt burden that equals or exceeds 20 percent of the borrower's monthly income, and that income, minus the borrower's Federal education debt burden, is less than 220 percent of the amount described in paragraph (s)(6)(iii) of this section.

(v) Is not working full-time and has a monthly income that—

(A) Does not exceed twice the amount described in paragraph (s)(6)(iii) of this section; and

(B) After deducting an amount equal to the borrower's Federal education debt burden, the remaining amount of the borrower's income does not exceed the amount described in paragraph (s)(6)(iii) of this section.

* * * * *

(ix) To qualify for a subsequent period of deferment that begins less than one year after the end of a period of deferment under paragraphs (s)(6)(iii) through (v) of this section, the lender must require the borrower to submit evidence showing—

(A) The amount of the borrower's most recent monthly income or a copy of the borrower's most recently filed Federal income tax return; and

(B) For periods of deferment under paragraphs (s)(6)(iv) and (v) of this section, evidence that would enable the lender to determine the amount of the monthly payments to all other entities for Federal postsecondary education loans that would have been owed by the borrower during the deferment period.

(x) For purposes of paragraph (s)(6) of this section, a borrower's monthly income is the gross amount of income received by the borrower from employment and from other sources, or one-twelfth of the borrower's adjusted gross income, as recorded on the borrower's most recently filed Federal income tax return.

* * * * *

3. Section 682.402 is amended by:

A. In paragraph (e)(3)(ii), removing the words ''the school's''.

B. In paragraph (e)(3)(ii)(A) adding the word ''and'' after the semicolon, and in paragraph (e)(3)(ii)(B), removing the word ''and'' after the semi-colon.

C. Removing paragraph (e)(3)(ii)(C).

D. Revising paragraph (e)(13)(ii)(A).

E. Revising paragraph (e)(13)(ii)(B) introductory text.

F. In paragraph (e)(13)(ii)(B)(*2*), removing the word ''or'' that appears after the semi-colon.

G. In paragraph (e)(13)(ii)(C), removing the period and adding in its place, ''; or''.

H. Adding a new paragraph (e)(13)(ii)(D).

I. Adding a new paragraph (e)(14).

The additions and revisions read as follows:

§ 682.402 Death, disability, closed school, false certification, unpaid refunds, and bankruptcy payments.

* * * * *

(e) * * *

(13) * * *

(ii) * * *

(A) For periods of enrollment beginning prior to July 1, 1987, was determined by the school to have the ability to benefit from the school's training in accordance with the requirements of 34 CFR 668.6, as in existence at the time the determination was made;

(B) For periods of enrollment beginning between July 1, 1987 and June 30, 1996, achieved a passing grade on a test—

* * * * *

(D) For periods of enrollment beginning on or after July 1, 1996—

(*1*) Has a high school diploma or its recognized equivalent;

(*2*) Has obtained within 12 months before the date the student initially receives title IV, HEA program assistance, a passing score specified by the Secretary on an independently administered test in accordance with subpart J of 34 CFR part 668; or

(*3*) Is enrolled in an eligible institution that participates in a State process approved by the Secretary under subpart J of 34 CFR part 668.

* * * * *

(14) *Discharge without an application.* A borrower's obligation to repay all or a portion of an FFEL Program loan may be discharged without an application from the borrower if the Secretary, or the guaranty agency with the Secretary's permission, determines that the borrower qualifies for a discharge based on information in the Secretary or guaranty agency's possession.

* * * * *

4. Section 682.406 is amended by revising paragraph (a)(11) to read as follows:

§ 682.406 Conditions for claim payments from the Federal Fund and for reinsurance coverage.

(a) * * *

(11) The agency exercised due diligence in collection of the loan in accordance with § 682.410(b)(6).

* * * * *

5. Section 682.410 is amended by:

A. Amending paragraph (b)(5)(i) introductory text by removing the reference to paragraph ''(b)(6)(iii)'' and adding in its place ''(b)(6)(v)''.

B. Amending paragraph (b)(5)(ii) introductory text by removing the reference to paragraph ''(b)(6)(ii)'' and adding in its place ''(b)(6)(v)''.

C. Revising paragraph (b)(6).

D. Removing paragraph (b)(7).

E. Redesignating paragraphs (b)(8) through (b)(11) as paragraphs (b)(7) through (b)(10), respectively.

F. Amending redesignated paragraph (b)(7)(ii) by removing the reference to paragraph ''(b)(8)(i)'' and adding in its place ''(b)(7)(i)''.

G. Amending redesignated paragraph (b)(7)(ii)(D) by removing the reference to paragraph ''(b)(6)(i)'' and adding in its place ''(b)(6)''.

H. Amending redesignated paragraph (b)(8) by removing the reference to paragraphs ''(b)(2), (5), (6), and (7)'' and adding in its place ''(b)(2), (5), and (6)''.

I. Amending redesignated paragraph (b)(9)(i)(E) by removing the references to paragraphs ''(b)(10)(i)(D)'' and ''(b)(10)(i)(J)'' and adding in their place ''(b)(9)(i)(D)'' and ''(b)(9)(i)(J)'', respectively.

J. Amending redesignated paragraph (b)(9)(i)(F) by removing the reference to paragraph ''(b)(10)(i)(H)'' and adding in its place ''(b)(9)(i)(H)''.

K. Amending redesignated paragraph (b)(9)(i)(I) by removing the reference to paragraph ''(b)(10)(i)(H)'' and adding in its place ''(b)(9)(i)(H)''.

L. Amending redesignated paragraph (b)(9)(i)(K) by removing both references to paragraph ''(b)(10)(i)(B)'' and adding in their place ''(b)(9)(i)(B)''.

M. Amending redesignated paragraph (b)(9)(i)(L) by removing both references to paragraph ''(b)(10)(i)(B)'' and adding in their place ''(b)(9)(i)(B)''.

N. Amending redesignated paragraph (b)(10)(ii) by removing the reference to ''§ 682.410(b)(11)(i)'' and adding in its place ''§ 682.410(b)(10)(i)''.

The revisions read as follows:

§ 682.410 Fiscal, administrative, and enforcement requirements.

* * * * *

(b) * * *

(6) *Collection efforts on defaulted loans.*

(i) A guaranty agency must engage in reasonable and documented collection activities on a loan on which it pays a default claim filed by a lender. For a non-paying borrower, the agency must perform at least one activity every 180 days to collect the debt, locate the borrower (if necessary), or determine if the borrower has the means to repay the debt.

(ii) A guaranty agency must attempt an annual Federal offset against all eligible borrowers. If an agency initiates proceedings to offset a borrower's State and Federal income tax refunds and other payments made by the Federal Government to the borrower, it may not initiate those proceedings sooner than 60 days after sending the notice described in paragraph (b)(5)(ii)(A) of this section.

(iii) A guaranty agency must initiate administrative wage garnishment proceedings against all eligible borrowers, except as provided in paragraph (b)(6)(iv) of this section, by following the procedures described in paragraph (b)(9) of this section.

(iv) A guaranty agency may file a civil suit against a borrower to compel repayment only if the borrower has no wages that can be garnished under paragraph (b)(9) of this section, or the agency determines that the borrower has sufficient attachable assets or income that is not subject to administrative wage garnishment that can be used to repay the debt, and the use of litigation would be more effective in collection of the debt.

(v) Within 45 days after paying a lender's default claim, the agency must send a notice to the borrower that contains the information described in paragraph (b)(5)(ii) of this section. During this time period, the agency also must notify the borrower, either in the notice containing the information described in paragraph (b)(5)(ii) of this section, or in a separate notice, that if he or she does not make repayment arrangements acceptable to the agency, the agency will promptly initiate procedures to collect the debt. The agency's notification to the borrower must state that the agency may administratively garnish the borrower's wages, file a civil suit to compel repayment, offset the borrower's State and Federal income tax refunds and other payments made by the Federal Government to the borrower, assign the loan to the Secretary in accordance with § 682.409, and take other lawful collection means to collect the debt, at the discretion of the agency. The agency's notification must include a statement that borrowers may have certain legal rights in the collection of debts, and that borrowers may wish to contact counselors or lawyers regarding those rights.

(vi) Within a reasonable time after all of the information described in paragraph (b)(6)(v) of this section has been sent, the agency must send at least one notice informing the borrower that the default has been reported to all national credit bureaus (if that is the case) and that the borrower's credit rating may thereby have been damaged.

* * * * *

6. Section 682.414 is amended by revising paragraph (a)(2) to read as follows:

§ 682.414 Records, reports, and inspection requirements for guaranty agency programs.

(a) * * *

(2) A guaranty agency must retain the records required for each loan for not less than 3 years following the date the loan is repaid in full by the borrower, or for not less than 5 years following the date the agency receives payment in full from any other source. However, in particular cases, the Secretary may require the retention of records beyond this minimum period.

* * * * *

PART 685—WILLIAM D. FORD FEDERAL DIRECT LOAN PROGRAM

7. The authority citation for part 685 continues to read as follows:

Authority: 20 U.S.C. 1087 *et seq.*, unless otherwise noted.

8. Section 685.214 is amended by:

A. Removing the words ''the school's'' in paragraph (c)(1).

B. Adding the word ''and'' after the semicolon at the end of paragraph (c)(1)(i).

C. Removing ''; and'' at the end of paragraph (c)(1)(ii) and adding, in its place, a period.

D. Removing paragraph (c)(1)(iii).

E. Adding a new paragraph (c)(6).

The revisions read as follows:

§ 685.214 Discharge for false certification of student eligibility or unauthorized payment.

* * * * *

(c) * * *

(6) *Discharge without an application.* The Secretary may discharge a loan under this section without an application from the borrower if the Secretary determines, based on information in the Secretary's possession, that the borrower qualifies for a discharge.

* * * * *

[FR Doc. 00–18953 Filed 7–26–00; 8:45 am]

BILLING CODE 4000–01–U

Federal Register

Thursday,
July 27, 2000

Part VI

Department of Education

34 CFR Part 682

Special Leveraging Educational Assistance Partnership Program; Proposed Rule

DEPARTMENT OF EDUCATION

34 CFR Part 692

RIN 1845–AA18

Special Leveraging Educational Assistance Partnership Program

AGENCY: Office of Postsecondary Education, Department of Education.

ACTION: Notice of proposed rulemaking.

SUMMARY: The proposed regulations govern the new Special Leveraging Educational Assistance Partnership (SLEAP) Program. These proposed regulations would implement changes made to the Higher Education Act of 1965, as amended (HEA), by the Higher Education Amendments of 1998, Public Law 105–481 (1998 Amendments).

DATES: We must receive your comments on or before September 11, 2000.

ADDRESSES: Address all comments about these proposed regulations to Jackie Butler, U.S. Department of Education, P.O. Box 23272, Washington, DC 20026–3272. If you prefer to send your comments through the Internet use the following address: sleapnprm@ed.gov.

If you want to comment on the information collection requirements you must send your comments to the Office of Management and Budget at the address listed in the Paperwork Reduction Act section of this preamble. You may also send a copy of these comments to the Department representative named in this section.

FOR FURTHER INFORMATION CONTACT: Jackie Butler, U.S. Department of Education, 400 Maryland Avenue, SW., room 3045, ROB–3, Washington, DC 20202–5447. Telephone: (202) 708–8242.

If you use a telecommunications device for the deaf (TDD), you may call the Federal Information Relay Service (FIRS) at 1–800–877–8339.

Individuals with disabilities may obtain this document in an alternate format (*e.g.*, Braille, large print, audiotape, or computer diskette) on request to the contact person listed under **FOR FURTHER INFORMATION CONTACT**.

SUPPLEMENTARY INFORMATION:

Invitation To Comment

We invite you to submit comments regarding these proposed regulations. To ensure that your comments have maximum effect in developing the final regulations, we urge you to identify clearly the specific section or sections of the proposed regulations that each of your comments addresses and to arrange your comments in the same order as the proposed regulations.

We invite you to assist us in complying with the specific requirements of Executive Order 12866 and its overall requirement of reducing regulatory burden that might result from these proposed regulations. Please let us know of any further opportunities we should take to reduce potential costs or increase potential benefits while preserving the effective and efficient administration of the program.

During and after the comment period, you may inspect all public comments about these proposed regulations in Room 3053, ROB–3, 7th & D Streets, SW., Washington, DC, between the hours of 8:30 a.m. and 4 p.m., Eastern time, Monday through Friday of each week except Federal holidays.

Assistance to Individuals With Disabilities in Reviewing the Rulemaking Record

On request, we will supply an appropriate aid, such as a reader or print magnifier, to an individual with a disability who needs assistance to review the comments or other documents in the public rulemaking record for these proposed regulations. If you want to schedule an appointment for this type of aid, you may call (202) 205–8113 or (202) 260–9895. If you use a TDD, you may call the Federal Information Relay Service at 1–800–877–8339.

Negotiated Rulemaking

Section 492 of the HEA requires that, before publishing any proposed regulations for programs under Title IV of the HEA, we obtain public involvement in the development of the proposed regulations. After obtaining advice and recommendations, we must conduct a negotiated rulemaking process to develop the proposed regulations. All published proposed regulations must conform to agreements resulting from the negotiated rulemaking process unless we reopen the negotiated rulemaking process or provide a written explanation to the participants in that process why we have decided to depart from the agreements.

To obtain public involvement in the development of the proposed regulations, we held listening sessions in Washington, DC, Atlanta, Chicago, and San Francisco. We held four half-day sessions on September 13 and 14, 1999, in Washington, DC. In addition, we held three regional sessions; one in Atlanta on September 17, one in Chicago on September 24, and one in San Francisco on September 27, 1999. The Office of Student Financial Assistance's Customer Service Task Force also conducted listening sessions to obtain public involvement in the development of our regulations.

We then published a notice in the **Federal Register** (64 FR 73458, December 30, 1999) to announce our intention to establish two negotiated rulemaking committees to draft proposed regulations affecting Title IV of the HEA. The notice requested nominations for participants from anyone who believed that his or her organization or group should participate in this negotiated rulemaking process. The notice announced that we would select participants for the process from the nominees of those organizations or groups. The notice also announced a tentative list of issues that each committee would negotiate.

Once the two committees were established, they met to develop proposed regulations over the course of several months, beginning in February, 2000. The proposed regulations contained in this NPRM reflect the final consensus of Negotiating Committee II (committee), which was made up of the following members:

American Association of Collegiate Registrars and Admissions Officers
American Association of Cosmetology Schools
American Association of State Colleges and Universities (in coalition with American Association of Community Colleges)
American Council on Education
Association of Jesuit Colleges and Universities
Career College Association
Coalition of Publicly Traded Educational Institutions
Consumer Bankers Association
Legal Services
NAFSA: Association of International Educators
National Accrediting Commission of Cosmetology Arts and Sciences, Inc.
National Association of College and University Business Officers
National Association of Independent Colleges and Universities
National Association of Student Financial Aid Administrators
National Association for State Student Grant and Aid Programs
National Association of State Universities and Land-Grant Colleges
National Council of Higher Education Loan Programs
National Direct Student Loan Coalition
Student Loan Servicing Alliance
The College Fund/United Negro College Fund
United States Department of Education
United States Student Association
US Public Interest Research Group

University Continuing Education Association

As stated in the committee protocols, consensus means that there must be no dissent by any member in order for the committee to be considered to have reached agreement. Consensus was reached on all of the proposed regulations in this document.

Proposed SLEAP Regulations

The 1998 Amendments added a new section 415E to subpart 4 of Title IV of the HEA to establish the SLEAP Program. The SLEAP Program is an additional component of the Leveraging Educational Assistance Partnership (LEAP) Program, which was formerly known as the State Student Incentive Grant (SSIG) Program. The SLEAP Program was created by Congress to provide incentive grants to States to assist them in providing financial assistance to eligible needy postsecondary students and services to eligible needy preschool, elementary school, and secondary school students.

These proposed SLEAP Program regulations were developed as a result of the new statutory provisions in the HEA that created the SLEAP Program. All of the proposed regulations support the specific SLEAP provisions in the HEA, including the requirement that every LEAP statutory provision that is not inconsistent with a specific SLEAP provision applies to the SLEAP Program. The proposed SLEAP Program regulations are presented under the reserved subpart B in title 34 of the Code of Federal Regulations (CFR) by amending part 692 (LEAP Program regulations).

Significant Proposed Regulations

We discuss issues under the sections of the proposed regulations to which they pertain. Generally, we do not address proposed regulatory provisions that are technical or otherwise minor in effect.

Section 692.53 What Requirements Must a State Satisfy to receive SLEAP Program Funds?

Proposed § 692.53 specifies the requirements that a State must meet to receive funds under the SLEAP Program. The proposed regulations provide that the State must participate in the LEAP Program to be able to receive SLEAP Program funds for a specific fiscal year and thus, meet all the requirements under the LEAP Program. The State is required to submit a SLEAP application in accordance with proposed § 692.60 in addition to satisfying the other requirements discussed later under that section.

Further, the proposed regulations require the State to have a SLEAP Program that provides assistance only to eligible students as discussed later under proposed § 692.54. Under the proposed regulations, the SLEAP Program must be administered by the same single State agency that administers the LEAP Program. That agency would have to submit all required SLEAP Program reports. These reports include an annual performance report detailing how the Federal dollars and non-Federal dollars were expended for the SLEAP Program. The proposed regulations also require that the State's SLEAP Program not allow any student or parent to be charged a fee that is payable to any organization, other than the State, for the collection of information needed to determine financial need.

A State's SLEAP Program that gives financial assistance to postsecondary students must ensure that all public and private nonprofit institutions of higher education and all postsecondary vocational institutions in the State are eligible to participate in the SLEAP Program unless the participation of certain types of institutions is in violation of the constitution of the State or a State statute enacted prior to October 1, 1978. If the State awards funds to independent students or less-than-full-time students enrolled in an institution of higher education, the proposed regulations require that the State's SLEAP Program for postsecondary students ensure that a reasonable portion of the State's SLEAP allocation be awarded to those students.

Section 692.54 What Eligibility Requirements Must a Student Satisfy to Participate in the SLEAP Program?

Proposed § 692.54 specifies the eligibility requirements that postsecondary students must meet to receive SLEAP financial assistance and non-postsecondary students must meet to receive services under the SLEAP Program. This proposed regulation, by referencing § 692.40, requires a postsecondary student to meet the relevant eligibility requirements contained in § 668.32 to receive SLEAP financial assistance. These include, among other things, the requirements that the student:

- Be a regular student;
- Not be enrolled in either an elementary or secondary school;
- Satisfy citizenship and residency requirements;
- Maintain satisfactory progress;
- Not be in default on a title IV, HEA program loan;
- Not owe a title IV, HEA overpayment; and
- Satisfy the Selective Service registration requirements.

The proposed regulation, by referencing § 692.40, requires the postsecondary student to also demonstrate financial need according to a system the State establishes and that we approve. This would be the same requirement that exists under the LEAP Program for having an approved system for determining need. To determine financial need, the State may use one of the following systems:

- A system that uses part F of title IV of the HEA;
- The State's own need analysis system, if approved by the Secretary; or
- A combination of these systems, if approved by the Secretary.

To receive program services under the SLEAP Program, the proposed regulations require a preschool, elementary school, or secondary school student to meet the relevant citizenship and residency requirements contained in § 668.33, and demonstrate financial need as determined by the State. The State would not need to receive our approval of the system it uses to determine the financial need of these non-postsecondary students under the proposed regulations.

Section 692.60 What Must a State Do To Receive an Allotment Under the SLEAP Program?

Proposed § 692.60 specifies the procedures that a State must follow to receive a SLEAP allotment. A State is required to submit an application for each fiscal year for which it wants to participate in the SLEAP Program. The application must be submitted by the same single State agency that administers the State's LEAP Program. In the application to participate in the SLEAP Program, the State is responsible for identifying the authorized activities, included in § 692.71, that it will fund under the SLEAP Program.

Under the proposed regulations, the State must satisfy the SLEAP maintenance-of-effort (MOE) requirement and assure us of that fact on its application. To satisfy the SLEAP MOE requirement, a State receiving SLEAP funding for a fiscal year would have to expend non-Federal funds, in total or per student, in the preceding fiscal year for authorized activities that were not less than it expended in the second preceding fiscal year. Note that although the statute and regulations refer to funding in terms of a fiscal year, States receive and award LEAP and

SLEAP funds operationally on an award year (July 1 through June 30) basis. Therefore, the States' MOE and matching requirements are also measured on an award year basis.

For example, a State wants to participate in the SLEAP Program for the 2000–2001 award year. In the 1999–2000 award year the total State expenditures for authorized SLEAP activities totaled $150,000. In the 1998–1999 award year, the State spent $100,000 on the authorized activities. The State expenditures for the activities for the 1999–2000 award year exceed the expenditures for the 1998–1999 award year and thus, satisfy the SLEAP MOE requirement.

In calculating the SLEAP MOE under the proposed regulations, the State reports any non-Federal funds that it spends for any activity or program that meets the definition of any of the authorized SLEAP activities, even if the State does not use those funds in the SLEAP Program. For the purpose of the SLEAP MOE, this applies even if the non-Federal funds were used to match another Federal program.

For example, if a State participates in the Gaining Early Awareness and Readiness for Undergraduate Programs (GEAR UP) Program, the State matching dollars for GEAR UP would be included as part of the State's SLEAP MOE because GEAR UP activities meet the definition of SLEAP authorized activity seven, which includes early intervention and mentoring programs. However, those State matching dollars used for GEAR UP, while acceptable for SLEAP MOE purposes, can not be used as matching dollars for any of the SLEAP authorized activities, because those State dollars are already used to match another Federal program which would be in violation of § 80.24 of the Education Department General Administrative Regulations (EDGAR). As another example, assume that a State awards teaching scholarships to students, which corresponds with SLEAP activity five, but does not use those funds as matching dollars for the SLEAP Program. Those State dollars for teaching scholarships would still be included in the State's SLEAP MOE.

The proposed regulations also require that the Federal SLEAP Program funds be matched with non-Federal funds. For every Federal SLEAP dollar a State spends, it must spend at least two matching dollars from non-Federal funds. A State may use any non-Federal funds that are spent for any of the authorized SLEAP activities, as long as those funds are not also being used to match other Federal programs. Non-Federal funds include, but are not limited to, State-appropriated funds or privately donated funds. The proposed regulations allow the Federal SLEAP dollars to be spent by the State for one authorized SLEAP activity and the non-Federal funds to be spent for a different authorized SLEAP activity.

Section 692.70 How Does the Secretary Allot Funds to the States?

Proposed § 692.70, by referencing § 692.10, specifies the formula used to allocate SLEAP funds to the participating States. Under the proposed regulations, Federal SLEAP funds are allocated to each State in the SLEAP Program based on the same formulas used for the LEAP Program. The LEAP and SLEAP programs are funded under one appropriation. The initial $30 million of the appropriation funds the LEAP Program. Any amount in excess of the initial $30 million must be used to carry out authorized activities under the SLEAP Program.

The proposed regulations require that a State's SLEAP allocation from the first $76,452,287 appropriated for both LEAP and SLEAP be calculated by a formula that provides a statutory hold-harmless provision based on the funds allocated as SSIG funds to the State for the 1979 fiscal year. The formula would calculate the State's SLEAP portion of the total LEAP and SLEAP appropriation that does not exceed the $76,452,287 amount that was provided to States in the 1979 fiscal year as follows:

$$\frac{\text{Students Per State (1979 Enrollment Data)}}{\text{Total Number of Students for All States (1979 Enrollment Data)}} \times \text{SLEAP Portion of First \$76,452,287 Appropriated for LEAP and SLEAP} = \text{Amount for SLEAP Allocation Per State}$$

When the total LEAP and SLEAP appropriation exceeds $76,452,287, the amount of the appropriation that exceeds $76,452,287 also has to be allocated to each participating State for its SLEAP Program. The proposed regulations require that a set formula be used to calculate the additional SLEAP amount that must be added to the results of the formula shown above to derive the total SLEAP allocation for a State. To determine this portion of the SLEAP allocation, when applicable, the formula is as follows:

$$\frac{\text{Students Deemed Eligible Per State (Latest Data)}}{\text{Total Number of Students Deemed Eligible for All States (Latest Data)}} \times \text{Amount of Appropriation Above \$76,452,287} = \text{Additional Amount of SLEAP Allocation Per State}$$

Section 692.71 What Activities May be Funded Under the SLEAP Program?

Proposed § 692.71 specifies the authorized SLEAP activities for which a State may use SLEAP Program funds. The authorized activities assist States in providing assistance to eligible students who demonstrate financial need. The proposed regulations allow a State to implement one or more of the activities under the SLEAP Program. Under the proposed regulations, a State may use SLEAP funds to do one or more of the following:

(1) *LEAP Grant Supplement*—Supplement its LEAP Program by increasing LEAP grant amounts for postsecondary students who demonstrate financial need (including exceeding the $5,000 maximum LEAP grant limit), or by increasing the number of LEAP recipients. This supplement may consist of Federal SLEAP funds or SLEAP matching funds, or both, and is accounted for and reported under the SLEAP Program and not the LEAP Program.

(2) *Transition Programs*—Implement transition programs for students who demonstrate financial need and are enrolled in secondary school or who have graduated from secondary school and are accepted for enrollment in a postsecondary institution.

(3) *Aid Programs for Critical Careers*—Award financial aid to postsecondary students who demonstrate financial need and wish to enter careers in information technology, or other fields of study that the State determines are critical to the State's workforce needs.

(4) *Community Service Work-Study Jobs*—Pay wages or salaries for community service work-study jobs to postsecondary students who demonstrate financial need.

(5) *Teaching Scholarship Programs*—Establish a postsecondary scholarship program that makes awards to students who demonstrate financial need and wish to become teachers, and award financial aid from that program.

(6) *Mathematics, Computer Science, or Engineering Scholarship Programs*—Establish a postsecondary scholarship program that makes awards to students who demonstrate financial need and wish to pursue a program of study leading to a degree in mathematics, computer science, or engineering, and award financial aid from that program.

(7) *Early Intervention, Mentoring, and Career Education Programs*—Implement early intervention, mentoring, and career education programs for preschool, elementary school, or secondary school students who demonstrate financial need.

(8) *Merit and Academic Scholarships*—Award merit or academic scholarships for any field of study, including teaching, mathematics, computer science, and engineering to postsecondary students who demonstrate financial need.

Executive Order 12866

1. Potential Costs and Benefits

Under Executive Order 12866, we have assessed the potential costs and benefits of this regulatory action.

The potential costs associated with the proposed regulations are those resulting from statutory requirements and those we have determined as necessary for administering this program effectively and efficiently.

In assessing the potential costs and benefits—both quantitative and qualitative—of this regulatory action, we have determined that the benefits would justify the costs.

We have also determined that this regulatory action would not unduly interfere with State, local, and tribal governments in the exercise of their governmental functions.

2. Clarity of the Regulations

Executive Order 12866 and the President's Memorandum of June 1, 1998, on ''Plain Language in Government Writing'' require each agency to write regulations that are easy to understand.

We invite comments on how to make these proposed regulations easier to understand, including answers to questions such as the following:

- Are the requirements in the proposed regulations clearly stated?
- Do the proposed regulations contain technical terms or other wording that interferes with their clarity?
- Does the format of the proposed regulations (grouping and order of sections, use of headings, paragraphing, etc.) aid or reduce their clarity?
- Would the proposed regulations be easier to understand if we divided them into more (but shorter) sections? (A ''section'' is preceded by the symbol ''§ '' and a numbered heading; for example, § 692.70 *How does the Secretary allot funds to the States?*)
- Could the description of the proposed regulations in the **SUPPLEMENTARY INFORMATION** section of this preamble be more helpful in making the proposed regulations easier to understand? If so, how?
- What else could we do to make the proposed regulations easier to understand?

Send any comments that concern how the Department could make these proposed regulations easier to understand to the person listed in the **ADDRESSES** section of the preamble.

Regulatory Flexibility Act Certification

We certify that these proposed regulations would not have a significant economic impact on a substantial number of small entities. These proposed regulations would affect institutions of higher education that participate in title IV, HEA programs, States, and State agencies. The U.S. Small Business Administration Size Standards define institutions as ''small entities'' if they are for-profit or nonprofit institutions with total annual revenue below $5,000,000 or if they are institutions controlled by governmental entities with populations below 50,000. Although States and State agencies are impacted by these regulations, they are not defined as ''small entities'' in the Regulatory Flexibility Act. Therefore, these proposed regulations would not have a significant economic impact on small entities.

Paperwork Reduction Act of 1995

Proposed § 692.60 contains information collection requirements. These requirements are accounted for under OMB No. 1845–0034, the information collection clearance package for the application to participate in the SLEAP Program. Proposed § 692.53 contains information collection requirements. These requirements will be accounted for in an information collection clearance package for the SLEAP Program performance report that will be submitted to OMB for review and approval. Therefore, all collection requirements found in 34 CFR part 692 will be accounted for in the previously mentioned information collection clearance packages for the reports and not the regulations.

Under the Paperwork Reduction Act of 1995 (44 U.S.C. 3507(d)), we have submitted a copy of these sections to the Office of Management and Budget (OMB) for its review.

Collection of information: Special Leveraging Educational Assistance Partnership Program—§ 692.60—What must a State do to receive an allotment under the SLEAP Program?—Application to Participate in the Special Leveraging Educational Assistance Partnership (SLEAP) Program—OMB No. 1845–0034. Section 415C(a) of the HEA requires a State that desires to obtain a payment under this program for any fiscal year to submit an annual application containing information necessary to enable us to carry out the functions under this program. The current application is approved for use through September 30, 2000. A new form will be developed and submitted to OMB for approval.

Section 76.720 of EDGAR requires a State to submit an annual performance report, unless we allow less frequent reporting. Although a performance report has not currently been developed for the SLEAP Program, we expect to have a form approved and available for distribution to participating States before October 1, 2001, the deadline for States to report their 2000–2001 award year SLEAP Program expenditures.

The annual Application to Participate in the SLEAP Program provides data used in program management. The complete application shows State qualifications for Federal funds, including the matching requirements, MOE capability, and methods of determining student financial need. With its signed assurances, the document commits a State to administer the Federal funds and State matching funds in compliance with the statute.

If you want to comment on the information collection requirements, please send your comments to the Office of Information and Regulatory Affairs, OMB, room 10235, New Executive Office Building, Washington, DC 20503; Attention: Desk Officer for U.S. Department of Education. You may also send a copy of these comments to the Department representative named in the **ADDRESSES** section of this preamble.

We consider your comments on these proposed collections of information in—

• Deciding whether the proposed collections are necessary for the proper performance of our functions, including whether the information will have practical use;

• Evaluating the accuracy of our estimate of the burden of the proposed collections, including the validity of our methodology and assumptions;

• Enhancing the quality, usefulness, and clarity of the information we collect; and

• Minimizing the burden on those who must respond. This includes exploring the use of appropriate automated, electronic, mechanical, or other technological collection techniques or other forms of information technology; *e.g.,* permitting electronic submission of responses.

OMB is required to make a decision concerning the collection of information contained in these proposed regulations between 30 and 60 days after publication of this document in the **Federal Register**. Therefore, to ensure that OMB gives your comments full consideration, it is important that OMB receive the comments within 30 days of publication. This does not affect the deadline for your comments to us on the proposed regulations.

Intergovernmental Review

The SLEAP Program is subject to Executive Order 12372 and the regulations in 34 CFR part 79. One of the objectives of the Executive order is to foster an intergovernmental partnership and a strengthened federalism. The Executive order relies on processes developed by State and local governments for coordination and review of proposed Federal financial assistance.

This document provides early notification of our specific plans and actions for this program.

Assessment of Educational Impact

We particularly request comments on whether these proposed regulations would require transmission of information that any other agency or authority of the United States gathers or makes available.

Electronic Access to This Document

You may view this document in text or Adobe Portable Document Format (PDF) on the Internet at the following sites:

http://ocfo.ed.gov/fedreg.htm
http://ifap.ed.gov/csb_html/fedlreg.htm

To use PDF you must have Adobe Acrobat Reader Program, which is available free at the first of the previous sites. If you have questions about using PDF, call the U.S. Government Printing Office (GPO), toll free, at 1–888–293–6498; or in the Washington, DC area at (202) 512–1530.

Note: The official version of this document is the document published in the **Federal Register**. Free Internet access to the official edition of the **Federal Register** and the Code of Federal Regulations is available on GPO Access at: http://www.access.gpo.gov/nara/index.html

(Catalog of Federal Domestic Assistance Number: 84.069 Special Leveraging Educational Assistance Partnership Program)

List of Subjects in 34 CFR Part 692

Grant programs—education, Postsecondary education, State administered—education, Student aid—education, Reporting and recordkeeping requirements.

Dated: July 19, 2000.

Richard W. Riley,

Secretary of Education.

For the reasons stated in the preamble, the Secretary proposes to amend title 34 of the Code of Federal Regulations by amending part 692 as follows:

PART 692—LEVERAGING EDUCATIONAL ASSISTANCE PARTNERSHIP PROGRAM

1. The authority citation for part 692 continues to read as follows:

Authority: 20 U.S.C. 1070c through c–4, unless otherwise noted.

2. Subpart B is revised to read as follows:

Subpart B—Special Leveraging Educational Assistance Partnership Program

General

Sec.
692.50 What is the Special Leveraging Educational Assistance Partnership Program?
692.51 What other regulations apply to the SLEAP Program?
692.52 What definitions apply to the SLEAP Program?
692.53 What requirements must a State satisfy to receive SLEAP Program funds?
692.54 What eligibility requirements must a student satisfy to participate in the SLEAP Program?

How Does a State Apply to Participate in the SLEAP Program?

692.60 What must a State do to receive an allotment under the SLEAP Program?

What Is the Amount of Assistance and How May It Be Used?

692.70 How does the Secretary allot funds to the States?
692.71 What activities may be funded under the SLEAP Program?

How Does a State Administer Its Community Service Work-Study Program?

692.80 How does a State administer its community service work-study program?

Subpart B—Special Leveraging Educational Assistance Partnership Program

General

§ 692.50 What is the Special Leveraging Educational Assistance Partnership Program?

The Special Leveraging Educational Assistance Partnership (SLEAP) Program assists States in providing—

(a) Grants, scholarships, and community service work-study assistance to eligible postsecondary education students who demonstrate financial need;

(b) Assistance to fund early intervention, mentoring, and career education programs for eligible students enrolled in preschool, elementary school, or secondary school who demonstrate financial need; and

(c) Assistance to fund transition programs for eligible students enrolled in secondary school who demonstrate financial need.

(Authority: 20 U.S.C. 1070c–3a)

§ 692.51 What other regulations apply to the SLEAP Program?

The regulations listed in § 692.3 also apply to the SLEAP Program.

(Authority: 20 U.S.C. 1070c–3a)

§ 692.52 What definitions apply to the SLEAP Program?

The following definitions apply to the SLEAP Program:

(a) The definitions listed in § 692.4.

(b) The definitions of the following terms in 34 CFR 77.1 (EDGAR):

Elementary school.

Preschool.

Secondary school.

(Authority: 20 U.S.C. 1070c–3a)

§ 692.53 What requirements must a State satisfy to receive SLEAP Program funds?

To receive SLEAP Program funds for any fiscal year, a State must—

(a) Participate in the LEAP Program;

(b) Meet the requirements in § 692.60; and

(c) Have a program that—

(1) Provides assistance only to students who meet the eligibility requirements in § 692.54;

(2) Satisfies the requirements in §§ 692.21(a) and (k); and

(3)(i) Satisfies the requirements in §§ 692.21(e), (f), (g), and (j), if that program provides students with postsecondary education assistance; or

(ii) Provides that no student or parent may be charged a fee that is payable to an organization other than the State for the purpose of collecting data to make a determination of financial need for preschool, elementary, or secondary school students.

(Authority: 20 U.S.C. 1070c–3a)

§ 692.54 What eligibility requirements must a student satisfy to participate in the SLEAP Program?

(a) To receive postsecondary financial assistance under the SLEAP Program, a student must meet the eligibility requirements contained in § 692.40.

(b) To receive early intervention, mentoring, career education or transition program services under the SLEAP Program, a preschool, elementary, or secondary school student must—

(1) Meet the applicable citizenship and residency requirements in 34 CFR 668.33; and

(2) Demonstrate financial need as determined by the State.

(Authority: 20 U.S.C. 1070c–3a)

How Does a State Apply To Participate in the SLEAP Program?

§ 692.60 What must a State do to receive an allotment under the SLEAP Program?

To receive an allotment under the SLEAP Program, a State must—

(a) Submit an application in accordance with the provisions in § 692.20;

(b) Identify the activities in § 692.71 that it plans to carry out;

(c) Provide an assurance that for the fiscal year prior to the fiscal year for which the State is requesting Federal funds, the amount the State expended from non-Federal sources per student, or the aggregate amount the State expended, for all the authorized activities in § 692.71 will be no less than the amount the State expended from non-Federal sources per student, or in the aggregate, for those activities for the second fiscal year prior to the fiscal year for which the State is requesting Federal funds; and

(d) Ensure that the Federal share will not exceed one-third of the total funds expended under the SLEAP Program.

(Authority: 20 U.S.C. 1070c–3a)

What Is the Amount of Assistance and How May It Be Used?

§ 692.70 How does the Secretary allot funds to the States?

For each fiscal year, the Secretary allots to each eligible State that applies for SLEAP funds an amount in accordance with the provisions in § 692.10.

(Authority: 20 U.S.C. 1070c–3a)

§ 692.71 What activities may be funded under the SLEAP Program?

A State may use the funds it receives under the SLEAP Program to implement one or more of the following:

(a) Increase the dollar amount of grants awarded under the LEAP Program to eligible students who demonstrate financial need as determined in § 692.41.

(b) Carry out transition programs from secondary school to postsecondary education for eligible students who demonstrate financial need as determined by the State.

(c) Carry out a financial aid program for eligible students who demonstrate financial need as determined in § 692.41 and who wish to enter careers in information technology or other fields of study determined by the State to be critical to the State's workforce needs.

(d) Make funds available for community service work-study activities for eligible students who demonstrate financial need as determined in § 692.41.

(e) Create a postsecondary scholarship program for eligible students who demonstrate financial need as determined in § 692.41 and who wish to enter teaching.

(f) Create a scholarship program for eligible students who demonstrate financial need as determined in § 692.41 and who wish to enter a program of study leading to a degree in mathematics, computer science, or engineering.

(g) Carry out early intervention programs, mentoring programs, and career education programs for eligible students who demonstrate financial need as determined by the State.

(h) Award merit or academic scholarships to eligible students who demonstrate financial need as determined in § 692.41.

(Authority: 20 U.S.C. 1070c–3a)

How Does a State Administer Its Community Service Work-Study Program?

§ 692.80 How does a State administer its community service work-study program?

When administering its community service work-study program, a State must follow the provisions in § 692.30, other than the provisions of paragraph (a)(1) of that section.

(Authority: 20 U.S.C. 1070c–3a)

[FR Doc. 00–18971 Filed 7–26–00; 8:45 am]

BILLING CODE 4000–01–U

Federal Register

Thursday,
July 27, 2000

Part VII

Department of Defense
General Services Administration
National Aeronautics and Space Administration

48 CFR Parts 42 and 52

Federal Acquisition Regulation; Final Contract Voucher Submission; Proposed Rule

DEPARTMENT OF DEFENSE

GENERAL SERVICES ADMINISTRATION

NATIONAL AERONAUTICS AND SPACE ADMINISTRATION

48 CFR Parts 42 and 52

[FAR Case 1999–026]

RIN 9000–AI86

Federal Acquisition Regulation; Final Contract Voucher Submission

AGENCIES: Department of Defense (DoD), General Services Administration (GSA), and National Aeronautics and Space Administration (NASA).

ACTION: Proposed rule.

SUMMARY: The Civilian Agency Acquisition Council and the Defense Acquisition Regulations Council (Councils) are proposing to amend the Federal Acquisition Regulation (FAR) to explicitly state the right of the contracting officer to unilaterally determine the final contract payment amount when the contractor does not submit the final invoice or voucher within the time specified in the contract. This contracting officer decision is final and binding upon the contractor and will not be subject to the right of appeal under the Contract Disputes Act.

DATES: Interested parties should submit comments in writing on or before September 25, 2000 to be considered in the formulation of a final rule.

ADDRESSES: Submit written comments to: General Services Administration, FAR Secretariat (MVRS), 1800 F Street, NW, Room 4035, ATTN: Laurie Duarte, Washington, DC 20405.

Submit electronic comments via the Internet to: farcase.1999–026@gsa.gov

Please submit comments only and cite FAR case 1999–026 in all correspondence related to this case.

FOR FURTHER INFORMATION CONTACT: The FAR Secretariat, Room 4035, GS Building, Washington, DC, 20405, at (202) 501–4755 for information pertaining to status or publication schedules. For clarification of content, contact Ms. Linda Klein, Procurement Analyst, at (202) 501–3775. Please cite FAR case 1999–026.

SUPPLEMENTARY INFORMATION:

A. Background

The Department of Defense established the Contract Close-out Working Integrated Process Team (CCWIPT) to improve the contract closeout process and reduce associated paperwork. On April 7, 1999, the team issued a report with a number of recommendations. The report found that the leading reason for contracts to remain open after they are physically complete is the contractor's failure to submit a final voucher to the Government. Therefore, one of the CCWIPT's recommendations is to revise the FAR to indicate that if a contractor has failed to submit any final invoice or voucher for a physically completed contract within the time provided, the contractor shall not have the right to appeal under the Disputes Clause at FAR 52.233–1, Disputes, any determination made by the contracting officer regarding the amount of final payment.

The Councils have adopted the CCWIPT's recommendation in this proposed rule. The rule revises FAR 42.705, Final indirect cost rates, and FAR 52.216–7, Allowable Cost and Payment, to—

- Explicitly state that the contracting officer may issue a unilateral modification that reflects the contracting officer's determination of the amounts due to the contractor under a completed contract. The contracting officer may make this determination if the contractor fails to submit a completion invoice or voucher within the time specified (normally 120 days after settlement of the final indirect cost rates but may be longer, if approved in writing by the contracting officer); and
- Make the contracting officer's determination not subject to appeal under the Disputes Clause of the contract.

This rule was not subject to Office of Management and Budget review under Section 6(b) of Executive Order 12866, Regulatory Planning and Review, dated September 30, 1993. This rule is not a major rule under 5 U.S.C. 804.

B. Regulatory Flexibility Act

The Councils do not expect this proposed rule to have a significant economic impact on a substantial number of small entities within the meaning of the Regulatory Flexibility Act, 5 U.S.C. 601, *et seq.*, because it is unlikely that a contractor would appeal the contracting officer's determination. The contractor would have little left to dispute regarding the amount of final payment on the contract once the contractor has submitted a final indirect cost rate proposal, the auditor has completed a final incurred cost audit; and the contractor and the Government have negotiated and agreed to the final indirect rates. An Initial Regulatory Flexibility Analysis has, therefore, not been performed. We invite comments from small businesses and other interested parties. The Councils will consider comments from small entities concerning the affected FAR parts in accordance with 5 U.S.C. 610. Interested parties must submit such comments separately and should cite 6 U.S.C. 601, *et seq.* (FAR case 1999–026), in correspondence.

C. Paperwork Reduction Act

The Paperwork Reduction Act does not apply because the proposed changes to the FAR do not impose information collection requirements that require the approval of the Office of Management and Budget under 44 U.S.C. 3501, *et seq.*

List of Subjects in 48 CFR Parts 42 and 52

Government procurement.

Dated: July 24, 2000.

Edward C. Loeb,

Director, Federal Acquisition Policy Division.

Therefore, DoD, GSA, and NASA propose that 48 CFR parts 42 and 52 be amended as set forth below:

1. The authority citation for 48 CFR parts 42 and 52 continues to read as follows:

Authority: 40 U.S.C. 486(c); 10 U.S.C. chapter 137; and 42 U.S.C. 2473(c).

PART 42—CONTRACT ADMINISTRATION AND AUDIT SERVICES

2. Amend Section 42.705 by revising paragraph (b) and by adding paragraph (c) to read as follows:

42.705 Final indirect cost rates.

* * * * *

(b) Within 120 days (or longer period, if approved in writing by the contracting officer,) after settlement of the final annual indirect cost rates for all years of a physically complete contract, the contractor shall submit a completion invoice or voucher reflecting the settled amounts and rates.

(c)(1) If the contractor fails to submit a completion invoice or voucher within the time specified in paragraph (b) of this section, the contracting officer may—

(i) Determine the amounts due to the contractor under the contract; and

(ii) Record this determination in a unilateral modification to the contract.

(2) This contracting officer determination is—

(i) Final and binding upon the contractor in discharge of all obligations to the contractor arising under the contract; and

(ii) Not subject to the right of appeal under the Disputes clause.

PART 52—SOLICITATION PROVISIONS AND CONTRACT CLAUSES

3. Amend Section 52.216–7 by revising the date of the clause; in paragraph (d) by redesignating paragraph (d)(4) as (d)(5) and paragraph (d)(5) as (d)(4), respectively; revising the newly designated (d)(5); by adding paragraph (d)(6); and by amending paragraph (h)(1) by removing ''paragraph (d)(4)'' and adding, in its place, ''paragraph (d)(5)''. The revised text reads as follows:

52.216–7 Allowable Cost and Payment.

* * * * *

ALLOWABLE COST AND PAYMENT (DATE)

* * * * *

(d) * * *

(5) Within 120 days (or longer period, if approved in writing by the Contracting Officer,) after settlement of the final annual indirect cost rates for all years of a physically complete contract, the Contractor shall submit a completion invoice or voucher to reflect the settled amounts and rates.

(6)(i) If the Contractor fails to submit a completion invoice or voucher within the time specified in paragraph (d)(5) of this clause, the Contracting Officer may—

(A) Determine the amounts due to the Contractor under the contract; and

(B) Record this determination in a unilateral modification to the contract.

(ii) This Contracting Officer determination is—

(A) Final and binding upon the Contractor in discharge of all obligations to the Contractor arising under the contract; and

(B) Not subject to the right of appeal under the Disputes clause.

* * * * *

[FR Doc. 00–19017 Filed 7–26–00; 8:45 am]

BILLING CODE 6820–EP–P

Reader Aids

Federal Register

Vol. 65, No. 145

Thursday, July 27, 2000

CUSTOMER SERVICE AND INFORMATION

Federal Register/Code of Federal Regulations

General Information, indexes and other finding aids	**202–523–5227**
Laws	**523–5227**
Presidential Documents	
Executive orders and proclamations	**523–5227**
The United States Government Manual	**523–5227**
Other Services	
Electronic and on-line services (voice)	**523–4534**
Privacy Act Compilation	**523–3187**
Public Laws Update Service (numbers, dates, etc.)	**523–6641**
TTY for the deaf-and-hard-of-hearing	**523–5229**

ELECTRONIC RESEARCH

World Wide Web

Full text of the daily Federal Register, CFR and other publications:

http://www.access.gpo.gov/nara

Federal Register information and research tools, including Public Inspection List, indexes, and links to GPO Access:

http://www.nara.gov/fedreg

E-mail

PENS (Public Law Electronic Notification Service) is an E-mail service for notification of recently enacted Public Laws. To subscribe, send E-mail to

listserv@www.gsa.gov

with the text message:

subscribe PUBLAWS-L your name

Use listserv@www.gsa.gov only to subscribe or unsubscribe to PENS. We cannot respond to specific inquiries.

Reference questions. Send questions and comments about the Federal Register system to:

info@fedreg.nara.gov

The Federal Register staff cannot interpret specific documents or regulations.

FEDERAL REGISTER PAGES AND DATE, JULY

40967–41320 3
41321–41550 5
41551–41864 6
41865–42272 7
42273–42596 10
42597–42854 11
42855–43212 12
43213–43676 13
43677–43960 14
43961–44402 17
44403–44640 18
44641–44944 19
44945–45274 20
45275–45510 21
45511–45700 24
45701–45830 25
45831–46084 26
46085–46334 27

CFR PARTS AFFECTED DURING JULY

At the end of each month, the Office of the Federal Register publishes separately a List of CFR Sections Affected (LSA), which lists parts and sections affected by documents published since the revision date of each title.

3 CFR

Proclamations:
7325 41313
7326 41547
7327 41865
7328 42595
7329 43673
7330 44641
7331 45701

Executive Orders:
13129 (See Notice of June 30, 2000) 41549
13161 41543
13162 43211

Administrative Orders:
Memorandums:
July 5, 2000 43213
July 17, 2000 45511
Notices:
June 30, 2000 41549
Presidential Determinations:
No. 2000-25 of June 29, 2000 42273
No. 2000-26 of July 7, 2000 44403

5 CFR

3 41867
177 44945
178 40967
213 41867
315 41867
532 ..... 42597, 43215
550 ..... 41868, 44643
591 ..... 44099, 44100
890 44644
892 44644

7 CFR

29 46085
272 ..... 41321, 41752
273 ..... 41321, 41752
274 41321
723 41551
929 42598
931 41557
947 42275
958 40967
982 40970
985 40973
989 ..... 40975, 44405
1140 44408
1218 43961
1230 43498
1464 41551
1735 42615

Proposed Rules:
51 46114
205 43259
215 45725
225 45725
226 45725
245 45725
905 ..... 41608, 42642
927 41018
1424 46115
4280 45319

8 CFR

103 43528
214 43528
236 43677
274a 43677
299 43677

Proposed Rules:
3 44476
103 43527
212 44477
214 43527
248 43527
264 43527

9 CFR

74 45275
94 ..... 43680, 43682
130 44947
590 44948

Proposed Rules:
1 42304
2 42304
391 45545
590 45545

10 CFR

2 44649
50 44649
170 44574
171 44574

Proposed Rules:
54 42305
55 41021
71 44360
72 42647
490 44988

11 CFR

104 42619

12 CFR

5 41559
563b 43088
575 43088
622 46087
700 44950
701 44974
702 44950
900 ..... 43969, 44414
915 41560
917 44414
925 40979
926 44414
940 43969
944 44414

950 .....40979, 43969, 44414
952.....44414
955.....43969
956.....43969
961.....44414
966.....43969
980.....44414
Proposed Rules:
205.....44481
226.....42092, 45547
563b.....43092
575.....43088
614.....45933
619.....45933
917.....43408
925.....43408
930.....43408
931.....43408
932.....43408
933.....43408
956.....43408
960.....43408
Ch. XVII 46119

13 CFR

120.....42624
121 .....44574, 45143, 45831
125.....45831
Proposed Rules:
123.....43261

14 CFR

35.....42278
39 .....40981, 40983, 40985, 40988, 41326, 41869, 41871, 42281, 42855, 43215, 43217, 43219, 43221, 43223, 43228, 43406, 44432, 44661, 44662, 44663, 44667, 44670, 44672, 44977, 45277, 45513, 45515, 45517, 45703, 45705, 45835, 46200
71 .....40990, 40991, 41328, 41329, 41330, 41576, 42856, 42858, 42859, 42860, 43406, 43683, 43684, 43686, 44435, 45425, 45519, 45520, 45521, 45707, 45708, 45837, 45838, 45839, 45840, 45841, 45842
95.....41578
97 .....43230, 43232, 46088, 46090
Proposed Rules:
Ch. 1 43265
13.....41528
21.....42796
36.....42796
39 .....41381, 41385, 41884, 42306, 43265, 43720, 44013, 44991, 44994, 44995, 44997, 45319, 45323, 45934, 45936, 46119, 46203, 46204, 46206, 46210, 46211, 46214, 46216, 46218, 46221, 46223
71 .....41387, 41388, 43406, 43722
255.....45551

15 CFR

30.....42556
732.....42556
740.....42556, 43130
743.....42556
744.....45842
746.....46091
748.....42556
750.....42556
752.....42556
758.....42556
762.....42556
772.....42556, 43130
774 .....42556, 43130, 43406
902.....43687, 45844

16 CFR

Proposed Rules:
436.....44484
1500.....44703

17 CFR

143.....45709
211.....40992
Proposed Rules:
4.....46122
210.....43148
240.....43148

18 CFR

35.....45854
157.....45856
270.....45859
284 .....41581, 41873, 43688
375.....45859
381.....45859
Proposed Rules:
35.....45938
284.....41885

19 CFR

Ch. I 42634
4.....44432
12.....45873
132.....43689
163.....43689
Proposed Rules:
4.....42893
19.....42893
122.....42893
123.....42893
127.....42893
141.....42893
142.....42893

20 CFR

404.....42283, 42772
416.....42283, 42772
655.....43539
Proposed Rules:
655.....43547
656.....46082

21 CFR

73.....41581, 41584
173.....45522
178.....41874
179.....45280
314.....43233
510.....45875
520.....45876, 45877
522 .....45876, 45877, 45878, 45879
524.....41587, 45282
556.....41588
558 .....41589, 41876, 45522, 45711, 45879, 45880, 45881
801.....44432
821.....43690
884.....41330
895.....43690
900.....43690
1300.....44673
1301.....44673, 45829
1304.....44673
1306.....45712
1307.....44673, 45829
1308.....43690
Proposed Rules:
20.....43269
58.....43269
101.....41029
170.....43269
171.....43269
174.....43269
179.....43269
1271.....44485

22 CFR

124.....45282
125.....45282
126.....45282, 45286

23 CFR

140.....45882, 45883
1325.....45713
1327.....45713
Proposed Rules:
1.....45941
172.....44486
450.....41891
655.....45942
771.....41892
940.....45942
1410.....41891
1420.....41892
1430.....41892

24 CFR

960.....42518
964.....42512
982.....42508
Proposed Rules:
15.....42578
27.....41538
290.....41538
990.....42488

25 CFR

Proposed Rules:
15.....43874
84.....43874
114.....43874
115.....43874
162.....43874
166.....43874
580.....45558

26 CFR

1 .....40993, 41332, 44436, 44437, 44574, 44679
31.....44679
602.....44437
Proposed Rules:
1 .....41610, 42900, 43723, 44491, 44709

27 CFR

275.....45523
Proposed Rules:
9.....45739

28 CFR

0.....44682
2.....45885
Proposed Rules:
540.....44400
544.....44400

29 CFR

4.....45903
4022.....43694
4044.....43694
Proposed Rules:
4.....45943
4022.....41610
4044.....41610

30 CFR

3.....42769
250.....41000, 46092
Proposed Rules:
70.....42122, 45742
72.....42068, 45743
75.....42122, 45742
90.....42122, 45742
250.....41892, 46126
934.....44015
946.....43723

31 CFR

501.....41334
598.....41334

32 CFR

199 .....41002, 45288, 45425

33 CFR

100.....41003
117.....45523, 45716
165 .....41004, 41005, 41007, 41009, 41010, 41342, 41590, 42287, 42289, 43236, 43244, 43695, 43697, 45289, 45290, 45292, 45293, 45525, 45908, 45910, 45911
Proposed Rules:
100.....45326
165.....45328

34 CFR

99.....41852
Proposed Rules:
674.....46127
682.....46316
685.....46324
692.....46324

36 CFR

Proposed Rules:
800.....42834
1191.....45331

37 CFR

Proposed Rules:
1.....42309
102.....41903
201.....41612

38 CFR

3.....43699
21.....44979
Proposed Rules:
1.....45332
3.....45952
9.....44999
39.....45333

39 CFR

20.....44438
111.....41877
775.....41011

40 CFR

9.....43586, 43840

50 45182
51 45526
52 ....41344, 41346, 41350, 41352, 41355, 41592, 42290, 42861, 43700, 43986, 43994, 44683, 44685, 44981, 45294, 45297, 45718, 45912, 45915, 45918
60 42292
62 43702
63 ....41594, 42292
81 ....45182, 45829
112 43840
122 ....43586, 43840
123 ....43586, 43840
124 ....43586, 43840
130 ....43586, 43840
180 ....41365, 41594, 41601, 42863, 43704, 44448, 44454, 44470, 44473, 44689, 44693, 44696, 45920, 45922
261 42291
270 42292
271 ....42871, 43246, 45925
300 ....41369, 46096
430 46104
712 ....41371, 45535

Proposed Rules:

50 45953
52 ....41389, 41390, 41391, 42312, 42649, 42900, 42907, 42913, 42919, 43726, 43727, 44709, 44710, 45002, 45003, 45335, 45566, 45743, 45953, 45955, 45956, 46131
62 43730
63 ....43730, 44616
80 42920
81 ....42312, 45953
82 42653
125 42936
131 ....41216, 45569
136 41391
141 41031
142 41031
146 42248
180 45569
260 42937
261 ....42937, 44492
268 42937
271 ....42937, 42960, 43284, 45955
300 ....41392, 45014, 46131
434 41613

41 CFR

Ch. 301 45299
60–741 45174
101–49 45539
102–42 45539

42 CFR

59 41268
409 41128
410 41128
411 41128
413 41128
424 41128
484 41128

Proposed Rules:

410 444176
414 444176

45 CFR

96 45301
1635 41879

46 CFR

298 45146
356 44860

Proposed Rules:

15 45955
67 46137
110 46143
111 46143

47 CFR

0 43713
1 ....43995, 44576, 46108
2 43995
15 43995
24 46109
27 42879
51 44699
52 43251
54 44699
64 ....43251, 45929
73 ....41012, 41013, 41375, 41376, 41377, 44010, 44011, 44476, 44984, 44985, 44986, 45720, 45721, 45722, 45723
80 43713
90 ....43713, 43716, 43995
95 43995
101 41603

Proposed Rules:

1 41613
2 41032
24 41034
27 42960
54 44507
73 ....41035, 41036, 41037, 41393, 41401, 41620, 41621, 44017, 44018, 44507, 45016, 45017, 45743, 45744
74 41401
87 41032

48 CFR

Ch. 1 (2 documents) 46052, 46074
2 46053
4 46074
5 ....46053, 46055
7 46053
10 46053
11 46064
12 ....46055, 46068
15 46053,
19 ....46053, 46055, 46069
22 ....46064, 46074
23 46055
28 46069
31 46071
36 46064
43 46072
49 46064
50 46073
52 ....46055, 46064, 46068, 46069, 46072
53 46055
501 41377
511 41377
512 41377
525 41377
532 41377
537 41377
552 41377
1804 43717
1807 45305
1815 45305
1825 45305
1827 45306
1835 45306
1842 45308
1852 ....43717, 45306

Proposed Rules:

2 42852
3 42852
8 41264
14 42852
15 ....41264, 42852
28 42852
30 44710
35 42852
42 46332
44 41264
52 ....41264, 42852, 46332
215 45574
225 41037
242 41038
252 41038
538 44508
552 44508
1837 43730

49 CFR

1 41282
80 44936
209 42529
211 42529
215 41282
220 41282
238 41282
260 41838
821 42637

Proposed Rules:

571 ....44710, 46228
594 44713
613 41891
621 41891
622 41892
623 41892
1247 44509

50 CFR

223 ....42422, 42481
600 45308
622 ....41015, 41016, 41379
635 42883
648 ....41017, 43687, 45543, 45844
660 45308
679 ....41380, 41883, 42302, 42641, 42888, 44011, 44699, 44700, 44701, 45316, 45723, 45745, 45930

Proposed Rules:

17 ....41404, 41405, 41782, 41812, 41917, 42316, 42662, 42962, 42973, 43450, 43730, 44509, 44717, 45336, 45956
20 45957
25 42318
32 42318
600 41622
622 ....41041, 42978
635 44753
648 42979
660 ....41424, 41426
679 ....41044, 44018, 45579

REMINDERS

The items in this list were editorially compiled as an aid to Federal Register users. Inclusion or exclusion from this list has no legal significance.

RULES GOING INTO EFFECT JULY 27, 2000

ENVIRONMENTAL PROTECTION AGENCY

Hazardous waste:
- Project XL program; site-specific projects—
  - International Paper Androscoggin Mill Facility, ME; effluent improvement project; published 7-27-00

FEDERAL COMMUNICATIONS COMMISSION

Practice and procedure:
- Computation of time; published 7-27-00

FEDERAL EMERGENCY MANAGEMENT AGENCY

Flood insurance program:
- Insurance coverage and rates—
  - Insured structures; inspection by communities; published 6-27-00

JUSTICE DEPARTMENT

Immigration and Naturalization Service

Executive Office for Immigration Review:
- Representation and appearances; professional conduct for practitioners; published 6-27-00

TRANSPORTATION DEPARTMENT

Maritime Administration

Merchant Marine training:
- Service obligations, deferments, and waivers; compliance determinations; appeal procedures; published 6-27-00

COMMENTS DUE NEXT WEEK

AGRICULTURE DEPARTMENT

Agricultural Marketing Service

Cherries (tart) grown in—
- Michigan et al.; comments due by 8-1-00; published 6-2-00

Peanut promotion, research, and information order:
- National Peanut Board; membership; comments due by 8-1-00; published 6-2-00

AGRICULTURE DEPARTMENT

Animal and Plant Health Inspection Service

Plant-related quarantine, domestic:
- Plum pox disease; interstate movement of articles from Adams County, PA restricted; comments due by 8-1-00; published 6-2-00

COMMERCE DEPARTMENT

Census Bureau

Decennial population information:
- State and local tabulations reports pursuant to 13 U.S.C. 141(c); comments due by 8-4-00; published 6-20-00

COMMERCE DEPARTMENT

National Oceanic and Atmospheric Administration

Fishery conservation and management:
- Alaska; fisheries of Exclusive Economic Zone—
  - Western Alaska Community Development Quota Program; comments due by 7-31-00; published 5-30-00
- Caribbean, Gulf of Mexico, and South Atlantic fisheries
  - South Atlantic snapper-grouper; comments due by 8-2-00; published 7-3-00
- Caribbean, Gulf, and South Atlantic fisheries—
  - Caribbean Fishery Management Council; meetings; comments due by 7-31-00; published 6-30-00
- West Coast State and Western Pacific fisheries—
  - Pacific Coast groundfish; comments due by 8-3-00; published 7-5-00
- West Coast States and Western Pacific fisheries—
  - Pacific Coast groundfish; comments due by 8-2-00; published 7-21-00

Ocean and coastal resource management:
- Marine sanctuaries—
  - Florida Keys National Marine Sanctuary; boundary expansion; comments due by 7-31-00; published 5-18-00
  - Florida Keys National Marine Sanctuary; boundary expansion; correction; comments due by 7-31-00; published 6-6-00

DEFENSE DEPARTMENT

Civilian health and medical program of uniformed services (CHAMPUS):
- National Institutes of Health-sponsored clinical trials; coverage methodology; comments due by 7-31-00; published 5-31-00
- TRICARE program—
  - Professional services in low-access locations; payments; comments due by 7-31-00; published 5-30-00

Federal Acquisition Regulation (FAR):
- Contract action and contracting action definitions; comments due by 7-31-00; published 5-31-00

Transactions other than contracts, grants, or cooperative agreements for prototype projects; comments due by 8-4-00; published 6-5-00

ENERGY DEPARTMENT

Energy Efficiency and Renewable Energy Office

Commercial and industrial equipment; energy conservation program:
- Commercial heating, air conditioning, and water heating equipment; workshop; comments due by 7-31-00; published 5-15-00

ENVIRONMENTAL PROTECTION AGENCY

Air quality implementation plans; approval and promulgation; various States:
- Connecticut; comments due by 7-31-00; published 6-30-00
- Florida; comments due by 8-4-00; published 6-20-00
- Indiana; comments due by 8-4-00; published 7-5-00
- Massachusetts; comments due by 8-4-00; published 7-5-00
- Oregon; comments due by 8-4-00; published 7-5-00

Hazardous waste program authorizations:
- Hawaii; comments due by 8-4-00; published 6-22-00

Pesticides; tolerances in food, animal feeds, and raw agricultural commodities:
- Methyl parathion; comments due by 8-1-00; published 6-2-00

Superfund program:
- National oil and hazardous substances contingency plan—
  - National priorities list update; comments due by 8-4-00; published 7-5-00
- National oil and hazardous substances contingency plan-
  - National priorities list update; comments due by 8-4-00; published 7-5-00

Water pollution; effluent guidelines for point source categories:
- Centralized waste treatment and landfills; comments due by 8-4-00; published 7-5-00

FARM CREDIT ADMINISTRATION

Farm credit system:
- Standards of conduct and loan policies; comments due by 7-31-00; published 6-30-00

FEDERAL COMMUNICATIONS COMMISSION

Digital television stations; table of assignments:
- Oklahoma; comments due by 7-31-00; published 6-16-00
- Texas; comments due by 7-31-00; published 6-16-00

Radio stations; table of assignments:
- Arizona; comments due by 7-31-00; published 7-3-00
- Missouri; comments due by 8-4-00; published 7-3-00

FEDERAL EMERGENCY MANAGEMENT AGENCY

Flood insurance program:
- Insurance coverage and rates—
  - Standard Flood Insurance Policy; changes; comments due by 7-31-00; published 5-31-00

GENERAL SERVICES ADMINISTRATION

Federal Acquisition Regulation (FAR):
- Contract action and contracting action definitions; comments due by 7-31-00; published 5-31-00

HEALTH AND HUMAN SERVICES DEPARTMENT

Health Care Financing Administration

Medicare Program:

State health insurance assistance program; terms and conditions; comments due by 7-31-00; published 6-1-00

INTERIOR DEPARTMENT

Fish and Wildlife Service

Endangered and threatened species:

Buena Vista Lake shrew; comments due by 7-31-00; published 6-1-00

Critical habitat designations—

Coastal California gnatcatcher; comments due by 7-31-00; published 6-29-00

Nesogenes rotensis, etc.; comments due by 7-31-00; published 6-1-00

Importation, exportation, and transportation of wildlife:

Injurious wildlife—

Black carp; information review; comments due by 8-1-00; published 6-2-00

JUSTICE DEPARTMENT

Immigration and Naturalization Service

Immigration:

Aliens—

Detention of aliens ordered removed; comments due by 7-31-00; published 6-30-00

LABOR DEPARTMENT

Mine Safety and Health Administration

Coal mine and metal and nonmetal mine safety and health:

Underground mines—

Diesel particulate matter exposure of miners; comments due by 7-31-00; published 6-30-00

NATIONAL AERONAUTICS AND SPACE ADMINISTRATION

Federal Acquisition Regulation (FAR):

Contract action and contracting action definitions; comments due by 7-31-00; published 5-31-00

TRANSPORTATION DEPARTMENT

Coast Guard

Drawbridge operations:

Louisiana; comments due by 7-31-00; published 5-10-00

TRANSPORTATION DEPARTMENT

Federal Aviation Administration

Airworthiness directives:

Boeing; comments due by 7-31-00; published 6-15-00

Dornier; comments due by 7-31-00; published 6-30-00

International Aero Engines; comments due by 7-31-00; published 6-30-00

Israel Aircraft Industries, Ltd.; comments due by 7-31-00; published 6-30-00

Raytheon; comments due by 7-31-00; published 6-16-00

Short Brothers; comments due by 7-31-00; published 6-30-00

Turbomeca; comments due by 7-31-00; published 5-31-00

Class E airspace; comments due by 8-3-00; published 6-22-00

TRANSPORTATION DEPARTMENT

Federal Motor Carrier Safety Administration

Motor carrier safety standards:

Drivers' hours of service—

Fatigue prevention; driver rest and sleep for safe operations; comments due by 7-31-00; published 5-2-00

TRANSPORTATION DEPARTMENT

National Highway Traffic Safety Administration

Consumer information:

Passenger cars and light multipurpose passenger vehicles and trucks; rollover prevention; comments due by 7-31-00; published 6-1-00

TRANSPORTATION DEPARTMENT

Saint Lawrence Seaway Development Corporation

Seaway regulations and rules:

Miscellaneous amendments; comments due by 7-31-00; published 6-29-00

TREASURY DEPARTMENT

Internal Revenue Service

Income taxes:

Cafeteria plans; tax treatment

Hearing; comments due by 8-3-00; published 7-14-00

LIST OF PUBLIC LAWS

This is a continuing list of public bills from the current session of Congress which have become Federal laws. It may be used in conjunction with "P L U S" (Public Laws Update Service) on 202–523–6641. This list is also available online at http://www.nara.gov/fedreg.

The text of laws is not published in the **Federal Register** but may be ordered in "slip law" (individual pamphlet) form from the Superintendent of Documents, U.S. Government Printing Office, Washington, DC 20402 (phone, 202–512–1808). The text will also be made available on the Internet from GPO Access at http://www.access.gpo.gov/nara/index.html. Some laws may not yet be available.

S. 1892/P.L. 106–248

To authorize the acquisition of the Valles Caldera, to provide for an effective land and wildlife management program for this resource within the Department of Agriculture, and for other purposes. (July 25, 2000; 114 Stat. 598)

Last List July 26, 2000

Public Laws Electronic Notification Service (PENS)

PENS is a free electronic mail notification service of newly enacted public laws. To subscribe, go to www.gsa.gov/archives/publaws-l.html or send E-mail to **listserv@www.gsa.gov** with the following text message:

SUBSCRIBE PUBLAWS-L Your Name.

Note: This service is strictly for E-mail notification of new laws. The text of laws is not available through this service. **PENS** cannot respond to specific inquiries sent to this address.