AUTHENTICATED
U.S. GOVERNMENT
INFORMATION
GPO

Federal Register

Wednesday,
September 20, 2000

Part II

Department of Transportation

Federal Aviation Administration

14 CFR Part 25, et al.

Improved Flammability Standards for Thermal/Acoustic Insulation Materials Used in Transport Category Airplanes; Proposed Rule

DEPARTMENT OF TRANSPORTATION

Federal Aviation Administration

14 CFR Parts 25, 91, 121, 125, and 135

[Docket No. FAA–2000–7909; Notice No. 00–09]

RIN 2120–AG91

Improved Flammability Standards for Thermal/Acoustic Insulation Materials Used in Transport Category Airplanes

AGENCY: Federal Aviation Administration (FAA), DOT.

ACTION: Notice of proposed rulemaking (NPRM).

SUMMARY: This document proposes upgraded flammability standards for thermal/acoustic insulation materials typically installed behind interior panels in transport category airplanes, by adopting new flammability test methods and criteria that specifically address flame propagation and entry of an external fire into the airplane (burnthrough) under realistic fire scenarios. This proposed rule change is considered necessary because the current standards do not realistically address situations in which thermal/acoustic insulation materials may contribute to the propagation of a fire. The proposed standards are intended to reduce the incidence and severity of cabin fires, particularly those ignited in inaccessible areas where thermal/acoustic insulation materials are typically installed. In addition, these proposed standards are also intended to provide an increased level of safety with respect to post-crash fires by delaying the entry of such a fire into the cabin, thereby providing additional time for evacuation and enhancing survivability. These new standards, in addition to being proposed for new type designs, are also proposed for newly manufactured airplanes entering part 121 service. Additionally, the proposed flame propagation standards are also proposed for newly manufactured airplanes entering parts 91, 125, and 135 service.

DATES: Comments must be received on or before January 18, 2001.

ADDRESSES: Comments on this document should be mailed or delivered, in duplicate, to: U.S. Department of Transportation Dockets, Docket No. FAA–2000–7909, 400 Seventh Street SW., Room Plaza 401, Washington, DC 20590. Comments also may be sent electronically to the following Internet address: 9-NPRM-CMTS@faa.gov. Comments may be filed and examined in Room Plaza 401 between 10 a.m. and 5 p.m. weekdays, except Federal holidays, In addition, the FAA is maintaining an information docket of comments in the Transport Airplane Directorate (ANM–100), Federal Aviation Administration, Northwest Mountain Region, 1601 Lind Avenue SW., Renton, WA 98055–4056. Comments in the information docket may be examined between 7:30 a.m. and 4 p.m. weekdays, except Federal holidays.

FOR FURTHER INFORMATION CONTACT: Jeff Gardlin, FAA Airframe and Cabin Safety Branch, ANM–115, Transport Airplane Directorate, Aircraft Certification Service, 1601 Lind Avenue SW., Renton, Washington 98055–4056; telephone (425) 227–2136, facsimile (425) 227–1149, e-mail: jeff.gardlin@faa.gov.

SUPPLEMENTARY INFORMATION:

Comments Invited

Interested persons are invited to participate in the making of the proposed action by submitting such written data, views, or arguments as they may desire. Comments relating to the environmental, energy, federalism, or economic impact that might result from adopting the proposals in this document are also invited. Substantive comments should be accompanied by cost estimates. Comments must identify the regulatory docket or notice number and be submitted in duplicate to the DOT Rules Docket address specified above.

All comments received, as well as a report summarizing each substantive public contact with FAA personnel concerning this proposed rulemaking, will be filed in the docket. The docket is available for public inspection before and after the comment closing date.

All comments received on or before the closing date will be considered by the Administrator before taking action on this proposed rulemaking. Comments filed late will be considered as far as possible without incurring expense or delay. The proposals in this document may be changed in light of the comments received.

Commenters wishing the FAA to acknowledge receipt of their comments submitted in response to this document must include a pre-addressed, stamped postcard with those comments on which the following statement is made: ''Comments to Docket No. FAA–2000–7909.'' The postcard will be date stamped and mailed to the commenter.

Availability of NPRMs

An electronic copy of this document may be downloaded using a modem and suitable communications software from the FAA regulations section of the Fedworld electronic bulletin board service (telephone: 703–321–3339), or the Government Printing Office's (GPO) electronic bulletin board service (telephone: 202–512–1661).

Internet users may reach the FAA's web page at http://www.faa.gov/avr/arm/nprm/nprm.htm or the GPO's web page at http://www.access.gpo.gov/nara for access to recently published rulemaking documents.

Any person may obtain a copy of this document by submitting a request to the Federal Aviation Administration, Office of Rulemaking, ARM–1, 800 Independence Avenue, SW., Washington, DC 20591, or by calling (202) 267–9680. Communications must identify the notice number or docket number of this NPRM.

Persons interested in being placed on the mailing list for future rulemaking documents should request from the above office a copy of Advisory Circular No. 11–2A, Notice of Proposed Rulemaking Distribution System, which describes the application procedure.

Background

Insulation is installed, typically behind airplane interior panels, in order to protect the occupants, cargo, and equipment of an airplane from thermal and acoustic extremes associated with environmental conditions and engine noise sources. This insulation is typically located in the passenger or cargo compartments of an airplane, although it may be located in any other compartment where insulation may be desired.

Insulation is usually constructed in the form of what is commonly referred to as a ''blanket.'' These insulation blankets are typically composed of: (1) A batting, of a material generically referred to as fiberglass (or glass fiber, or glass wool, with Owens Corning's Fiberglas® being one example); and (2) a film covering to contain the batting and to resist moisture penetration, usually metalized or non-metalized polyethylene terephthalate (PET), with DuPont's Mylar® being one example, or metalized polyvinyl fluoride (PVF), with DuPont's Tedlar® being one example. Another type of film, used on certain specific airplanes, is polyimide. It should be noted that, irrespective of the type of film, there are variations associated with its assembly for manufacture that result in differences in performance from a fire safety standpoint. These variations include the density of the film, the type and fineness of the scrim bonded to the film, and the adhesive used to bond the scrim

to the film. The scrim is usually constructed of either nylon or polyester and is bonded to the backside of the film to add shape and strength to the surface area. The scrim resembles a screen, and the mesh can vary in fineness. The type of adhesive used to bond the scrim to the film also varies. Adhesive is frequently the repository of any fire retardant in the assembled sheet.

Current Regulations Pertinent to Thermal/Acoustic Insulation Materials

The current regulations pertaining to thermal/acoustic insulation address neither the thermal nor acoustic performance aspects, but rather the materials' tendency to propagate flame. The intent of the requirement is to ensure that insulation materials do not represent a significant fuel source in the event of a fire, or provide a medium for a fire to spread inside the airplane. The existing FAA regulations have focused on ensuring that insulation blankets comply with the basic ''Bunsen burner'' flammability requirements described below.

In addition to performing their originally intended functions, thermal/acoustic blankets have also been shown to delay what is termed fuselage burnthrough. (Fuselage burnthrough refers to the penetration of a post-crash external fire through the fuselage skin and insulation into an interior compartment.) This delay of burnthrough serves to increase the time available for occupants to evacuate an airplane. However, this valuable attribute, which is believed to be a characteristic inherent to some degree in all existing insulation blankets, has not been addressed or required in the regulations.

The FAA has adopted a number of regulations that address flammability concerns on airplanes. The current flammability requirements pertinent to discussions in this notice are as follows:

Section 25.853(a), ''Compartment interiors,'' requires that materials in compartments occupied by crew or passengers must meet the applicable test criteria of part I of appendix F to 14 CFR part 25.

Section 25.855(d), ''Cargo or baggage compartments,'' requires that for cargo and baggage compartments not occupied by crew or passengers, materials used in the construction of said compartments must meet the applicable test criteria of part I of appendix F to part 25.

The applicable test criteria referenced in the requirements listed above are defined in paragraph (a)(1)(ii) of part I of appendix F to part 25, and prescribe that insulation materials must be self-extinguishing after having been subjected to the flame of a Bunsen burner for 12 seconds, in accordance with the procedures defined in paragraph (b)(4) of part I of appendix F. The average burn length may not exceed 8 inches, and the average flame time after removal of the flame source may not exceed 15 seconds. Drippings from the test specimen may not continue to flame for more than an average of 5 seconds after falling. These criteria were adopted in 1972 and are those in use today. The purpose of these test criteria is to ensure that materials be self-extinguishing when exposed to likely ignition sources under actual conditions. Based on the service record at the time these criteria were adopted, these criteria appeared to provide the level of protection intended.

Section 91.613, ''Materials for compartment interiors,'' requires that airplanes certificated in accordance with SFAR No. 41, with a maximum certificated takeoff weight in excess of 12,500 pounds, comply within 1 year of issuance of the airworthiness certificate with the requirements of §§ 25.853(a), (b), (b–1), (b–2), and (b–3), in effect on September 26, 1978.

Section 121.312(c), ''All interior materials, airplanes type certificated in accordance with SFAR No. 41 of 14 CFR part 21,'' requires that affected airplanes with a maximum certificated takeoff weight in excess of 12,500 pounds must have interior materials that comply with § 25.853(a), in effect on March 6, 1995 (formerly § 25.853(a), (b), (b–1), (b–2), and (b–3) in effect on September 26, 1978). Section 121.312(d), ''All interior materials; other airplanes,'' requires that materials must comply with the applicable requirements under which the airplane was type certificated.

Section 125.113(a)(1) & (2), ''Cabin interiors,'' requires that upon the first major overhaul of an airplane cabin or refurbishing of the cabin interior, all materials in each compartment used by the crew or passengers that do not meet the following requirements must be replaced with materials that meet these requirements: § 25.853 in effect on April 30, 1972, for airplanes for which the type certificate application was filed prior to May 1, 1972; and the materials requirement under which the airplane was type certificated for airplanes for which the type certificate application was filed on or after May 1, 1972.

Section 135.170, ''Materials for compartment interiors,'' specifically applies to airplanes that conform to an amended or supplemental type certificate issued in accordance with SFAR No. 41 for a maximum certificated takeoff weight in excess of 12,500 pounds. Paragraph (a) of this section requires that, one year after issuance of the initial airworthiness certificate issued in accordance with SFAR No. 41, the airplane must meet the compartment interior requirements set forth in § 25.853(a) in effect on March 6, 1995 [formerly § 25.853(a), (b), (b–1), (b–2), and (b–3) in effect on September 26, 1978]. This section also requires certain additional airworthiness requirements concerning the use of particular materials for various cabin interior components on airplanes other than commuter category airplanes and airplanes certificated under SFAR No. 41.

Incidents Involving Insulation Materials

The FAA is aware of at least six events in which the flammability characteristics of thermal/acoustic insulation material may have been a contributing factor. In November of 1993, a fire occurred in a McDonnell Douglas MD–87 airplane while it was taxiing in from a landing at Copenhagen, Denmark. The fire was found to have been initiated by an electrical fault behind a sidewall, but investigators later determined that the insulation materials contributed to the propagation of the fire. In November of 1995, a cabin fire occurred in a McDonnell Douglas MD–82 airplane prior to takeoff at Turin, Italy. The cause of the fire was attributed to a ruptured lighting ballast. In that case, other interior materials played a more significant role in propagating the fire, but there was evidence that the fire also propagated on the film of the insulation.

In June of 1996, the FAA received a letter from the Civil Aviation Authority of China (CAAC), which described three incidents of interior fires that occurred in China in 1994 and 1995. Those incidents involved McDonnell Douglas and Boeing airplanes and were caused by electrical problems or inappropriate maintenance actions. In each of those cases, physical damage to the airplane was minimal, but there was clear evidence that the fires had propagated on the insulation.

The FAA had been doing research to develop a new standard and had issued several reports on evaluations of test methods. The FAA initiated investigations and research, described later in this notice, to determine the appropriateness of applying existing Bunsen burner flammability criteria to thermal/acoustic insulation, as typically installed in concealed and inaccessible areas, and to develop more suitable criteria if considered necessary.

On September 2, 1998, an MD–11 airplane experienced a catastrophic accident as the result of an inflight fire. Although the cause of the accident has not been determined, the FAA considers that it is likely that the fire spread on the thermal/acoustic insulation, and has published proposed airworthiness directives to address the affected material (64 FR 43966, August 12, 1999). Those airworthiness directives are applicable to certain model DC–9–80 (MD–80), MD–90, DC–10–30/30F, and MD–11/11F airplanes and require removal of the worst performing material (metalized Mylar).

Fire Safety Research—General

The FAA has adopted an aggressive program to improve airplane fire safety. As a result, stringent new test methods were adopted that significantly upgraded the flammability standards for airplane materials associated with seat cushions, large interior panels, cargo compartment liners, and fire detection and suppression equipment for the majority of cargo compartments in the fleet. In order to maximize the safety benefit, the most significant areas were addressed first, with subsequent rulemaking addressing additional areas according to their relative priority in fire safety.

Those improvements addressed what the FAA considered to be the most significant areas of airplane interiors, from a flammability standpoint, and provided improved design requirements for new airplanes, as well as upgraded requirements for the existing fleet. All of these improvements were supported by research conducted, for the most part, at the FAA William J. Hughes Technical Center.

Fire Safety Research—Thermal/Acoustic Insulation Materials

As an initial response to the incidents described above, the FAA conducted a review of both the part 25, appendix F, required test method, and a test method used by certain segments of the industry to assess the flammability of thermal/acoustic insulation. That test method involves the use of alcohol-soaked cotton swabs that are ignited and then placed on a 16- × 24-inch sample of insulation material. Tests utilizing this method were conducted at the FAA Technical Center in 1997, and at other test facilities around the world. (Ref. FAA Report DOT/FAA/AR–97/58, ''Evaluation of Fire Test Methods for Aircraft Thermal Acoustical Insulation,'' dated September 1997, a copy of which is available in the docket for this rulemaking.) This multi-facility test program showed that the ''cotton-swab'' test did provide better discrimination among materials than did the existing Bunsen burner certification test method.

During 1997 and 1998, the Aerospace Industries Association (AIA) conducted additional testing at the FAA Technical Center, using a full-scale fuselage frame section. The purpose of these tests was to determine whether the cotton-swab test method was an adequate certification test method. The results of these tests showed that there were materials that could pass the cotton-swab test but would still propagate a flame in a large-scale environment. In addition, because the ignition source used was limited to a large cotton swab, the test did not simulate other sources of ignition, specifically any other burning material or electrical arcing. Based on these results, the FAA concluded that there was no effective test method that represented material behavior under full-scale test conditions. It was determined that a new test method was required.

Thermal/acoustic insulation impacts fire safety in two ways. First, due to its concealed location behind interior panels, if not sufficiently fire resistant it can provide a path for undetected fire propagation. As noted earlier, the current certification test requires that these materials be self-extinguishing after exposure to a Bunsen burner flame. Second, the insulation blankets can provide protection against fuselage burnthrough.

The FAA has been studying fuselage burnthrough since the late 1980's and has determined that by improving thermal/acoustic insulation, the time before an external fire penetrates the fuselage can be extended. In conjunction with the Civil Aviation Authority (CAA) of the United Kingdom (UK), and the Direction Generale de l'Aviation Civile (DGAC) of France, research was undertaken to assess the current capability of airplane fuselages to resist burnthrough from an external fuel fire. That research demonstrated the importance of thermal/acoustic insulation in the burnthrough process and is documented in the following reports: ''Fuselage Burnthrough from Large Exterior Fuel Fires,'' Federal Aviation Administration final report DOT/FAA/CT–90/10, July 1994; ''Full-Scale Test Evaluation of Aircraft Fuel Fire Burnthrough Resistance Improvements,'' Federal Aviation Administration report DOT/FAA/AR–98/52, January 1999; and ''Burnthrough Resistance of Fuselages: Further Investigation,'' CAA Paper 95003, Civil Aviation Authority, London 1995. (A copy of each report is in the docket for this rulemaking.) Findings as a result of that research indicate that without making any other change to the airplane, improved thermal/acoustic insulation can delay the entry of a post-crash fuel fire by several minutes, thus prolonging the time available for escape. Conversely, the absence of thermal/acoustic insulation can allow earlier entry of a fire into the airplane. Although there are other factors that affect fuselage burnthrough (*e.g.,* fuselage skin and floor panel characteristics, ventilation systems, etc.), research demonstrated that the simplest and most effective approach to improving burnthrough resistance was to improve the fire resistance of the insulation.

In the course of carrying out this research, a medium-scale test method that could be correlated with full-scale testing was developed in the UK. This test method was valuable in reducing the number of full-scale tests required to establish baseline data, but the size and complexity of the apparatus made it impractical for regulatory purposes. Consequently, smaller-scale testing, using a modified apparatus of the type currently used for certification testing of seat cushions and cargo compartment liners, was developed in France. This work was coordinated with the International Aircraft Materials Fire Test Working Group (IAMFTWG). The IAMFTWG consists of experts in the materials and fire testing specialties who help refine and support the development of test methods used in aviation, and includes representatives from the airlines, airframe manufacturers, material suppliers, and regulatory authorities, among others. A representative from the FAA Technical Center chairs this group. The IAMFTWG is a participative technical peer group that contributes to FAA research, but its activities are not regulatory in nature.

In July of 1997, the FAA determined that the separate investigative work on burnthrough and on flame propagation should be combined, with the aim of producing a single test method. The reason for this decision was to maximize the benefit from any requirements that resulted from the test method. However, during the test development period, it became clear that a single test was not practical. This is because the two phenomena are distinctly different, and performance in one area does not predict performance in the other. Therefore, the FAA has developed two tests, which are discussed below. (These tests are documented in draft FAA Report DOT/FAA/AR–99/44, ''Development of Improved Flammability Criteria for Aircraft Thermal/Acoustic Insulation,''

a copy of which will be placed in the docket when finalized. Additionally, Internet users may access the FAA Technical Center's web page at http://www.fire.tc.faa.gov for additional research relating to the test methods.)

Flame Propagation

In order to address the issue of fire propagation, the FAA conducted a series of small, medium, and full-scale tests with various insulation materials. These tests identified various characteristics of these materials that were significant as to whether or not the materials would spread a fire from an otherwise small ignition source. In particular, the FAA found that a piloted controlled ignition under conditions of radiant heat tends to predict the materials' performance in a full-scale fire. The influence of these characteristics is further dependent on the fire threat, and much of the FAA's work was aimed at identifying a realistic threat.

In conducting small-scale tests, the FAA found that many of the materials currently used tend to shrink or, in some cases, melt away from a flame faster than the flame can propagate on the material. That is, the mechanical properties of the material tend to dominate its combustion properties. However, the FAA also found that the same materials could behave differently if they were pre-heated, such as might occur in a confined space. In that case, some materials that self-extinguish when tested as a small test specimen at room temperature exhibit flame propagation tendencies that suggest the potential to grow into a large fire. The size of the ignition source and degree to which heat can be trapped determine whether the material will exhibit this behavior. If the ignition source is large enough, and the space confined, even highly fire-resistant materials will propagate a fire. However, confined spaces and potential ignition sources of varying sizes exist throughout the airplane.

The FAA has adapted American Society of Testing and Materials (ASTM) test method E 648, which uses a modest ignition source combined with exposure to radiant heat, to determine fire propagation performance. This test was developed to qualify flooring, but lends itself very effectively to insulation materials. (A copy of the ASTM test method is in the public docket for this rulemaking.) The FAA has developed a calibration method that will impose representative heat flux, as derived from full-scale tests, on the insulation materials. This test is considered to represent a realistic fire threat, and at the same time imposes reasonable success criteria, considering the state-of-the-art of insulation materials. The tests conducted by the FAA to qualify this standard indicate that some of the materials currently used will pass the new standard. This method is described in detail in proposed part VI to appendix F of part 25.

Burnthrough

This test method involves use of a kerosene burner apparatus, modified slightly from its configuration as used in other certification testing, that realistically simulates the thermal characteristics of a post-crash fire. The test stand and specimen are configured to simulate a small section of fuselage frames and stringers, with insulation material mounted over them. Fuselage skin is not represented in this test, since the delay in burnthrough afforded by the skin is not directly related to the performance of the insulation. The test is intended to measure the performance of the insulation itself. This test method is described in detail in proposed part VII to appendix F of part 25.

Discussion of the Proposal

Both service history and laboratory testing demonstrate that the current flammability requirements applicable to thermal/acoustic insulation materials may not be providing the intended protection against the spread of fires. Additionally, the FAA considers that increased protection against external fire penetrating the fuselage can be provided by proper selection of the same material. The FAA considers that the new test methods described earlier would not only provide for increased in-flight fire safety, by reducing the flammability of thermal/acoustic insulation blankets, but would also provide increased time for evacuation during externally fed, post-crash fires by increasing fuselage burnthrough resistance. The FAA therefore proposes to amend the current regulations as follows:

Proposed Part 25 Requirements

The FAA proposes to adopt the new test methods described earlier as new part VI and part VII requirements to appendix F. One aspect of the proposed requirements is a test to measure the propensity of the insulation to spread a fire. This test method is specified in proposed part VI to appendix F. The second aspect of the proposal is a test to measure the fire penetration resistance of the insulation, and is specified in proposed part VII to appendix F. The proposed requirements are new flammability test standards that would be applied to thermal/acoustic insulation in lieu of the current standard.

In addition, in view of the fact that current flammability requirements focus almost exclusively on materials located in occupied compartments (§ 25.853) and cargo compartments (§ 25.855), this proposal includes the adoption of a new § 25.856, which would address thermal/acoustic insulation materials wherever installed. This aspect of the proposal recognizes the role that thermal/acoustic insulation in other areas may have in either flame propagation and/or fuselage burnthrough protection, and would subject the thermal/acoustic materials in those compartments to the proposed flammability standards.

In accordance with § 21.17, these new standards would apply to new type certificates for which application is made after the effective date of the final rule.

Flame Propagation

The FAA proposes a new standard to address flame propagation of thermal/acoustic insulation, regardless of where it is installed in the airplane. The current flammability requirements focus almost exclusively on materials located in occupied compartments (§ 25.853) and cargo compartments (§ 25.855). However, the FAA considers that the potential for an inflight fire is not limited to those specific compartments. Thermal/acoustic insulation is installed throughout the airplane in other areas, such as electrical/electronic (E/E) compartments or surrounding air ducts, where there is the potential for materials to spread a fire as well. By applying the standards only to certain compartments, the intended safety benefit would not be realized for materials installed in other areas of the airplane. The proposal would therefore account for insulation installed in areas such as equipment bays and wrapped around ducts that might not otherwise be considered within a specific compartment. The flame propagation provisions of this proposal would apply to all transport category airplanes, regardless of size or passenger capacity, since the consequences of an inflight fire are not related to those factors.

Burnthrough

Lower Half: The FAA has considered whether to make the burnthrough requirement applicable to only certain areas of the fuselage; that is, those areas considered to be most susceptible to penetration by an external fire. The lower portion of the fuselage is the most susceptible to burnthrough from an external fuel fire because flames from

such a fire would typically impinge on the fuselage from below. Therefore, the lower portion would derive the most benefit from enhanced burnthrough protection. Although the additional costs associated with providing this same protection to the remainder of the airplane are not great, the benefits would be negligible. Therefore, the proposed requirement for burnthrough protection would apply only to insulation materials installed in the lower half of the fuselage. It should be noted that the ''lower half'' is above the cabin floor for most airplanes. This point was chosen based on full-scale fire test data, as documented in the previously referenced reports, and the potential for the airplane to be off its landing gear. That is, in conditions of landing gear collapse, the airplane can roll significantly and the area most susceptible to burnthrough can be correspondingly higher on the fuselage than when the airplane is on its gear. By providing burnthrough protection for the lower half of the fuselage, this situation is also accounted for.

Applicability: The FAA considers that the requirement for burnthrough protection should be made applicable only to airplanes with a passenger capacity of 20 or greater. This effectively excludes the smaller transport category airplanes, as well as airplanes operating in an all-cargo mode. The primary reason for this is that airplanes with small passenger capacities are not expected to realize a significant benefit from enhanced burnthrough protection owing to their very rapid evacuation capability; that is, they have a favorable exit-to-passenger ratio. Since it is expected that enhanced burnthrough protection will impose additional cost, there must be a commensurate benefit to justify such a proposal. The FAA does not consider that such benefits are substantial for airplanes with low passenger capacities. The specific discriminant of 20 passengers was chosen to be consistent with other occupant safety regulations, such as those for interior materials and cabin aisle width. The FAA considers that the evacuation capability of airplanes with 20 or more passengers, regardless of the exit arrangement, could be improved by enhanced burnthrough protection. The FAA invites comments on this aspect of the proposal.

Installation Details: For new designs, the proposed new burnthrough test method would apply to the insulation as installed on the airplane. Thus, consistent with similar flammability testing of other installed materials, the means intended to be used for fastening the insulation to the fuselage would have to be accounted for when performing tests. For consistency, the test method would impose a standard methodology for fastening. In addition to this proposal, the FAA is developing advisory material concerning the installation of insulation that would enable the installer to avoid a specific test on the fasteners, etc. Although failures of fasteners or seams during this test may not exacerbate flame propagation characteristics, such failures could adversely affect the burnthrough protection capability. Since research has shown practical fastening means are available for ensuring that the insulation material remains in place, it is proposed that fastening means be considered for newly manufactured airplanes.

Fuselage Burnthrough Alternative: This proposed rule would establish a standard for thermal/acoustic insulation that addresses that material's ability to resist penetration of an external flame, rather than a rule for fuselage burnthrough per se. This distinction is important, since fuselage burnthrough is a complex process, dependent on many variables. For example, the ability of the fuselage to resist penetration from an external fuel fire is directly related to the thickness and material of the skin. Skin thickness varies considerably, and essentially means that each airplane type has different burnthrough resistance. In addition, factors internal to the airplane can also affect penetration of an external fire into the occupied areas. For example, differences in the air return grills can influence the time required for an external fire to penetrate the occupied area. Therefore, establishing a minimum standard for fuselage burnthrough resistance and identifying possible means of compliance would be a highly complex undertaking.

This notice proposes a simple standard that has been shown to increase the time it takes for a fire to penetrate the airplane beyond what currently exists, regardless of the specific capability that currently exists. Since this increase in time can be achieved by addressing thermal/acoustic insulation material, and since this proposal would revise the standard for insulation to address flame propagation anyway, it is in the public interest to incorporate criteria that enhance the overall level of safety and that can be achieved with reasonable cost. Therefore, the standards proposed in this notice address two aspects of fire safety related to insulation material.

Although this proposal does not require that insulation be installed, it would enhance the overall level of safety of the airplane when insulation is installed. Because of the need to provide a suitable thermal and acoustical environment inside the airplane, the FAA considers it extremely unlikely that insulation would be removed as a means to avoid compliance with this rule. In fact, the removal of insulation material was considered as an option to address the flame propagation issues, but was rejected since it would effectively diminish the burnthrough capability that currently exists. Should removal of insulation become a common practice, the FAA will revisit the need for a specific fuselage burnthrough standard.

Equivalency (Applies to Both Burnthrough and Flame Propagation)

The proposed changes to appendix F include a provision for FAA-approved equivalent methods. This provision, which is included in other parts of appendix F, is intended to allow for the incorporation of improvements to the test methods as they are identified, without requiring specific findings of equivalent level of safety under 14 CFR 21.21. Experience has shown that such improvements frequently originate with the IAMFTWG and are readily adopted by the industry. It should be noted that the proposed standards of appendix F constitute the basic requirement, and that such equivalent methods that might be developed would have to be adopted in total. It would not be acceptable to selectively adopt portions of a modified test method that has been found to be equivalent and not all of the modified method. The determination of an acceptable equivalent method would be made by the FAA.

Proposed Operating Requirements

In addition to changing the design standards for future type certificate applications, the FAA considers that the benefits from improved flammability standards can be realized for existing designs, as well. The technology exists today so that these benefits can be obtained in a cost effective manner by applying the standards under some circumstances to newly manufactured airplanes and to existing airplanes when insulating materials are replaced. The FAA's means for obtaining benefits earlier than would be provided by changing design standards is to revise the operating rules. Requirements for newly manufactured airplanes become a basic airworthiness requirement for those airplanes and apply throughout their service life. Requirements proposed for the existing fleet relate to materials that are replaced in service. This latter aspect of the proposal would

not affect newly manufactured airplanes, since they would already be required to comply by virtue of their date of manufacture.

Flame Propagation

New Production: The FAA proposes that newly manufactured airplanes entering the fleet in parts 91, 121, 125, and 135 service be required to comply with the new standards relative to flame propagation. Since there are materials currently available that will meet the proposed standards, this requirement would impose minimal additional costs. This requirement would apply to airplanes manufactured more than two years after the effective date of the final rule. Two years is considered sufficient time to allow for material production capacity to be developed and disposition of existing inventory.

It should be noted that this proposal differs from previous rulemaking related to flammability of materials in that the applicability to newly manufactured airplanes is not limited to operations under part 121. However, in this case the proposal would effectively add no cost, and the potential for an inflight fire is not limited to air carrier operations. The FAA invites comments on this aspect of the proposal.

Replacement: Amendments to parts 91, 121, 125, and 135 are proposed to require that insulation materials, when installed as replacements, meet the new flame propagation test requirements of § 25.856. This proposal would provide for the gradual attrition of earlier materials. Since there are existing materials that meet the proposed standards, and since those materials cost and weigh no more than other materials, this should result in no additional cost to operators.

As with newly manufactured airplanes, it is appropriate to address not only those airplanes operated in part 121 air carrier service, but other operations as well, since the flame propagation portion of this proposal would enhance safety over the current regulatory requirements, and can be done at no cost. The language in proposed changes to part 121 differs from that in other parts to make it clear that the replacement aspect of this proposal does not in any way provide relief from the basic requirements for newly manufactured airplanes. As discussed below, part 121 differs from other parts in that airplanes manufactured after a specified date (four years after the effective date of the final rule) would have to comply with the burnthrough protection standard, as well as the flame propagation standard, and these requirements would also apply to replacement materials subsequently installed in those airplanes. To avoid possible confusion, the requirement for replacement materials to comply only with the flame propagation standard would apply to airplanes manufactured before the specified date.

Although it is difficult to quantify the benefits of piecemeal replacement of materials, in this case the benefit is without cost and adds no burden. In order to allow for attrition of current inventories and acquisition of the new materials, the FAA is proposing a 2-year compliance time, after which insulation materials that are replaced would have to be replaced with materials meeting the new flame propagation standards. This requirement is expected to apply to a relatively small amount of materials that are replaced every year. As with newly manufactured airplanes, two years is considered sufficient time to allow for material production capacity to be developed and disposition of existing inventory.

Burnthrough Protection

New Production: The FAA also proposes that newly manufactured airplanes entering the fleet in part 121 operations be required to comply with the new standards relative to burnthrough protection. This requirement would apply to airplanes manufactured more than 4 years after the effective date of the final rule. Although there are materials currently available that will meet the proposed standards, these materials are not widely used. Therefore, the burnthrough portion of the proposal is expected to require both material and, in many cases, design changes to implement. As discussed in the context of the proposed part 25 changes, these design changes relate primarily to the means of fastening the insulation to the fuselage structure. For those airplanes that require design changes, the FAA recognizes that adequate time is necessary to perform the necessary engineering and to obtain approval for the changes. Four years is considered a reasonable time to implement any design changes and configuration control measures required to account for the new standard, and to allow for material availability.

Generally, airplanes operated under parts 91, 125, and 135 carry fewer passengers than airplanes operating under part 121 and can, as a result, be evacuated more quickly. Therefore, the FAA considers that the additional evacuation time provided by enhanced fuselage burnthrough protection would not provide the same increase in safety for these airplanes. In light of the costs associated with requiring compliance with the burnthrough standard, imposing the requirement would not be cost effective. This conclusion is similar to the conclusion, discussed in the context of the proposed part 25 burnthrough standard, not to impose the new standard for airplanes with fewer than 20 passengers. However, since transport category airplanes can be operated under different regulatory requirements throughout their service life, it is likely that most, if not all, affected newly manufactured transport category airplanes would comply, in order to account for potential future part 121 operations. The FAA invites comments on this aspect of the proposal.

Replacement: This proposal does not include a requirement to use materials complying with the burnthrough test standards because the FAA considers that such a requirement would not be cost effective. If the fuselage is subjected to an external fire, it is unlikely that insulation complying with this standard that has been installed in a portion of the fuselage would significantly delay burnthrough if the rest of the fuselage contains insulation that does not comply with the new standard. As discussed previously, in order to be effective against burnthrough, new insulation materials would also have to be installed in a manner that would allow them to remain in place when exposed to an external fire. Requiring that the means of fastening, and the associated engineering necessary to incorporate design changes, be accounted for on a material replacement basis would not be cost effective.

Date of Manufacture

For the purposes of this proposal, the date of manufacture is considered to be the date on which inspection records show that an airplane is in a condition for safe flight. This is not necessarily the date on which the airplane is in conformity with the approved type design, or the date on which a certificate of airworthiness is issued, since some items not relevant to safe flight, such as passenger seats, may not be installed at that time. It could be earlier, but would be no later, than the date on which the first flight of the airplane occurs. This definition has been used in previous rulemaking, including the preamble to Amendment 121–247, Improved Flammability Standards for Materials Used in the Interiors of Transport Category Airplanes, (60 FR 6616), § 121.312 and § 121.343, Flight recorders.

Paperwork Reduction Act

In accordance with the Paperwork Reduction Act of 1995 (44 U.S.C 3507(d)), the FAA has determined that there are no requirements for information collection associated with this proposed rule.

International Compatibility

In keeping with U.S. obligations under the Convention on International Civil Aviation, it is FAA policy to comply with International Civil Aviation Organization (ICAO) Standards and Recommended Practices to the maximum extent practicable. The FAA has determined that there are no ICAO Standards and Recommended Practices that correspond to these proposed regulations.

Regulatory Evaluation Summary

Changes to Federal regulations must undergo several economic analyses. First, Executive Order 12866 directs that each Federal agency shall propose or adopt a regulation only upon a reasoned determination that the benefits of the intended regulation justify its costs. Second, the Regulatory Flexibility Act of 1980 requires agencies to analyze the economic effect of regulatory changes on small entities. Third, the Unfunded Mandates Reform Act of 1995 (Pub. L. 104–4) requires each Federal agency to prepare a written assessment of the effects of any Federal mandate in a proposed or final agency rule that may result in the expenditure by State, local, or tribal governments, in the aggregate, or by private sector, of $100 million or more annually (adjusted for inflation). These analyses have been completed, are summarized below, and fully discussed in the full regulatory evaluation. The FAA invites the public to provide comments and supporting data on the assumptions made in this evaluation. All comments received will be considered in the final regulatory evaluation.

Costs of Proposed Rule

Testing results at the FAA's Technical Center show that insulation materials are commercially available that will meet the FAA's proposed requirements for both flame propagation and burnthrough. The estimates presented below are preliminary and may overstate the actual material costs to affected operators, because other, less expensive materials may be developed as the proposed tests become known. The FAA solicits information from manufacturers, air carriers, and insulation blanket manufacturers to refine these estimates.

Insulation Material Unit Costs and Weights

Insulation material costs are a function of the size of the airplane and its thermal and acoustical needs, which, in turn, depend on the configuration of the airplane, its performance characteristics, and its utilization. Based on dimensional, material weight, and cost information received from airplane manufacturers, air carriers, and insulation blanket manufacturers, and the results of testing by the FAA's Technical Center, the FAA has determined that some materials that would meet the proposed test requirements cost and weigh no more than materials currently being installed in newly-produced airplanes. Because the proposed rule would apply to newly-produced airplanes (*i.e.*, no airplanes would be removed from service for retrofit), only the incremental costs of these improved blankets and engineering costs to effect any design changes are attributable to the rule.

The FAA estimates that insulation blankets currently installed in transport category airplanes are composed of an average of 3 inches of fiberglass batting covered with a film. Under the proposed requirements for affected part 121 airplanes with 20 or more passenger seats, the FAA assumes that the blankets in the lower half of the fuselage would be composed of an average of 2 inches of fiberglass batting and 1 inch of Curlon® batting (a material that would meet the proposed requirements for burnthrough protection), and the blankets in the upper half would be composed of an average of 3 inches of fiberglass. Blankets would be enclosed in metalized PVF, a film shown to meet the proposed flame propagation requirements. Airplanes with fewer than 20 passenger seats would continue to have an average of 3 inches of fiberglass batting covered with metalized PVF film.

Other materials may also be used, but these may be more expensive or add substantial weight to the blankets. The FAA solicits information concerning the materials that would be used to comply with the proposed requirements.

The FAA has determined that there would be no incremental cost (for either materials or weight) of installing insulation in airplanes with fewer than 20 passenger seats, because some materials that are currently used would meet the proposed requirements for flame propagation. For airplanes with 20 or more passengers, the additional cost would be that of replacing 1 inch of fiberglass with 1 inch of Curlon®. Because Curlon® and fiberglass are comparable in weight, there would be no weight penalty associated with Curlon's® use.

Part 121 Airplanes Produced Between 2000 and 2019

In order to determine the number and types of transport category airplanes added to the U.S. air carrier (part 121) fleet during the years 2000–2019, the FAA reviewed its own forecast as well as those of Boeing and Airbus. The FAA estimated the number of airplanes that would be affected by the proposed rule and manufactured between 2000 and 2019.[1]

Of the estimated 10,943 newly produced N-registered transport category airplanes expected to join the part 121 fleet during that 20-year period, 8,781 would be required to have fuselage burnthrough protection. An estimated 2,162 newly-produced transport category airplanes with fewer than 20 seats would be exempt from this proposed requirement.

The FAA has determined that some insulation materials that are currently used would meet the proposed requirements for flame propagation; therefore, the FAA attributes no incremental costs from this requirement. The total discounted cost for these 8,781 airplanes that would be required to have burnthrough protection over 20 years is $52.6 million, or $22.6 million discounted to present value at seven percent. The annualized cost over 20 years is $2.1 million.

The proposed requirement for transport category airplanes operating under parts 91, 125, and 135 would be only for improved insulation meeting the proposed flame propagation standards, and the FAA has determined that there would be no incremental costs from this requirement.

Engineering Costs

Manufacturers would incur costs of changing installation drawings and production part numbers for the new insulation blankets of newly produced currently certificated airplanes.[2] Estimates of the time to accomplish these changes are a function of the size of the airplane and whether or not the blanket configuration would have to be changed. The process of accomplishing these tasks would involve a series of steps, including changing the drawings (part numbers and, when necessary, blanket configurations) and reviews and

[1] These estimates include airplanes produced under new type certificates.

[2] There would be no costs attributable to the proposed rule for airplanes of new type designs, because these engineering costs are for changes to drawings.

approvals by various groups (*e.g.,* engineering, weight and balance, stress groups).

The FAA estimates that there would be 15 models of currently certificated airplanes in operation under part 121 at the time the proposed rule would be effective. (The FAA assumes there would be six models of two-engine narrowbody airplanes, six models of two-engine widebody airplanes, two of which would be cargo models, and three models of four-engine widebody airplanes.) The FAA estimates the burdened hourly rate for an engineer is $130. If only blanket materials change, the FAA estimates costs would total $13.8 million. If both blanket materials and their configurations change, the estimated costs would be $48.9 million. These costs would occur in the first 2 years after the effective date of the rule. Discounted costs, assuming half the cost would be incurred in 2000 and half in 2001, would range from $12.5 million to $44.2 million. The FAA solicits information concerning the engineering costs to part 121 airplane manufacturers, including information concerning the need for blanket configuration changes.

Because airplane models operated under part 125 are typically the same airplane models that are operated under part 121, there would be no additional engineering costs to those models. Manufacturers of other transport category airplanes, that is, those operating under parts 91 or 135, would also incur engineering costs. The FAA estimates these costs to be $750,000, or $678,000 discounted to present value.

Testing Equipment

Manufacturers of insulation blankets or blanket components would incur costs to test blankets or blanket components. Two tests are proposed: a flame propagation test and a burnthrough test.

The flame propagation test (also called the critical radiant flux test) is based on a test method developed for floor-covering systems, Standard Test Method ASTM E 648 for Critical Radiant Flux of Floor-Covering Systems using a Radiant Head Energy Source. The FAA's Technical Center has modified the test method for purposes of measuring flame propagation on insulation materials. A rig that is used for ASTM E 648 testing costs about $50,000. The FAA expects that airplane manufacturers, insulation blanket fabricators, and chemical company manufacturers would purchase or construct 12 of these modified rigs. The costs, therefore, would be $720,000. The FAA assumes that these costs would be incurred in the first year of the rule. Based on the assumption that the proposed rule would become effective in the year 2000, the costs of flame propagation testing equipment would be $673,000 discounted to present value.

The proposed burnthrough test was developed through the joint sponsorship of the FAA, the Civil Aviation Authority of the United Kingdom (UK), and the Direction Generale de l'Aviation Civile (DGAC) of France, with the FAA's Technical Center providing the test standardization. The equipment would include a gun-type test burner that uses kerosene for a fuel source and various components that measure heat flux, temperature, air velocity, and time. The test rig would be provided with an exhaust system to remove combustion products. The FAA estimates that the test apparatus would cost about $10,000. Again, the FAA expects that airplane manufacturers, insulation blanket fabricators, and chemical companies would purchase 12 rigs. The costs, therefore, would be $120,000 for 12 rigs, or $112,000 discounted to present value.

Manufacturers currently have facilities and personnel that conduct blanket certification testing; therefore, the FAA has attributed no other costs to testing materials.

Total Costs of the Proposed Rule

If only blanket material changes are made, the total costs over the years 2000–2019 are $68.0 million, or $36.5 million discounted to present value. Improved insulation costs account for about 77 percent of total nondiscounted costs, while engineering costs account for 21 percent and testing equipment accounts for 1 percent.

If manufacturers need to make configuration changes as well as material changes to their drawings, the FAA estimates that total costs would be $103.1 million over the years 2000–2019, or $68.2 million discounted to present value. In this scenario, engineering costs account for 51 percent of total nondiscounted costs, improved insulation costs account for 48 percent, and testing equipment accounts for 1 percent.

In both scenarios, the greatest costs would be incurred during the first 2 years after the effective date, when airplane and insulation blanket manufacturers and testing labs would incur costs. On a per airplane basis, the costs would average between $6,200 and $9,400, depending on whether or not configuration changes were needed.

Benefits of the Proposed Rule

On September 2, 1998, Swissair Flight 111 crashed off the coast of Nova Scotia, Canada, with a loss of 229 lives.

Although the Transportation Safety Board of Canada has not released its report of the probable causes of the Swissair accident, preliminary evidence points to burning thermal/acoustical insulation above the cockpit ceiling as contributing to the crash. The airplane, a McDonnell Douglas MD–11, used insulation blankets composed of fiberglass covered with metalized Mylar®. The FAA considers that replacement of metalized Mylar® may be necessary and is proceeding to address the affected material by airworthiness directive.

There have been other reports of fires in which the flammability of the thermal/acoustical insulation was a contributing factor. These accidents and incidents indicate that the flammability of the thermal/acoustic insulation can be a significant factor in contributing to the spread of a fire, either inflight or after a crash. The proposed rule would reduce those threats by requiring newly produced airplanes to use improved insulation that passes the proposed requirements for flame propagation and fuselage burnthrough.

The FAA, in conjunction with the CAA–UK and the DGAC of France, conducted research to assess the current capability of airplane fuselages to resist burnthrough from an external fuel fire. That research demonstrated the importance of thermal/acoustic insulation in the burnthrough process. Without making any other change to the airplane, these studies showed that improved thermal/acoustic insulation can delay the entry of a post-crash fuel fire by several minutes, thus prolonging the time available for escape. Although there are other factors that affect fuselage burnthrough, it was demonstrated that the simplest and most effective approach to improving burnthrough resistance was to improve the fire resistance of the insulation.

A study by R.G.W. Cherry & Associates Limited examined the International Cabin Safety Research Technical Group's Survivable Accidents Database to identify and extract data for airplane accidents where fuselage burnthrough was an issue in the survivability of the occupants. A burnthrough accident was defined as: ''An aircraft accident where the fuselage skin was penetrated by an external fire while live occupants were on board.'' A survivable accident is one ''where there were one or more survivors or there was potential for survival.'' Only survivable

or potentially survivable accidents in which there were fire injuries were selected for analysis.

Seventeen accidents involving 2,201 occupants and occurring between 1966 and 1993 were identified by Cherry & Associates. In analyzing accidents, Cherry & Associates took into account improvements that might have been made to numbers of fatalities and injuries if the airplanes had been configured to later requirements. These later requirements were:

- Floor proximity lighting/marking
- Seat cushion flammability
- Reduced heat release of cabin interior materials
- Improved access to type III exits

Cherry & Associates derived benefits based on the airplane standards at the time of the accident and on airplanes assumed to be configured to later requirements. Because the proposed rule would apply to newly produced airplanes, the results based on later requirements are those used in the FAA's benefits analysis.

Of the 140 worldwide fire related fatal accidents in the International Cabin Safety Research Technical Group's Survivable Accidents Database at the time of Cherry & Associate's study, only 54 percent had sufficient data to assess whether burnthrough occurred. Assuming the accidents that did not have sufficient data have a similar benefit potential to those that do, the actual benefits would be 1.85 times (1/0.54) the analyzed benefits.

The FAA's Technical Center has determined that the burnthrough protection requirements of this proposed rule would provide an additional 4 minutes for occupants to exit an airplane. Cherry & Associates' analysis shows that an additional 4 minutes would result in 10.1 lives saved per year worldwide. Because the proposed rule would apply only to newly produced airplanes of U.S. registry, the FAA has adjusted this estimate downward.

The Cherry report states that the authors do not believe that ''* * * the number of fatalities and injuries will change markedly for the near future.'' The FAA disagrees. Based on FAA and industry forecasts, the number of transport category passenger airplanes in the world fleet is expected to grow by 109 percent over the years 2000—2019, while the number of airplanes in the U.S. fleet is expected to grow by 97 percent. The number of passengers enplaned by U.S. carriers is expected to grow by 107 percent. Therefore, the FAA has estimated that Cherry's estimate of 10.1 lives saved per year would increase by about 2.157 percent per year or by 50 percent by 2019.

The FAA estimates that 37.2 fatalities that would have occurred on airplanes of U.S. registry would be avoided over 20 years by the proposed rule's requirement for burnthrough protection. Assuming society is willing to pay $2.7 million to avoid a fatality, burnthrough protection for the newly produced airplanes in the U.S. fleet would result in a nondiscounted total benefit of $100.5 million over the 20-year period, or $37.7 million discounted to present value.

There would also be benefits from the proposed flame propagation requirement. As several of the incidents and accidents reviewed for this analysis and described in the complete regulatory evaluation show, the potential for ignition from electrical arcing or other sources can be high. The proposed flame propagation requirements would ensure that, if ignition occurred, the resultant flame would not spread on the thermal/acoustic insulation.

The FAA is unable to quantify these benefits. However, preventing the loss of one airplane and its passengers over the 20-year period is not unlikely. Assuming such a loss would occur at the midpoint of the analysis, or in 2009, with 169 passengers, the nondiscounted loss would be $455.5 million, or $231.5 million discounted to present value (again, assuming society's willingness to pay $2.7 million to avoid a fatality). This loss does not include the value of the airplane. Even without loss of life, as several of the incidents show, a hull loss could exceed tens of millions of dollars. The FAA therefore has determined that this proposed rule would be cost beneficial.

Initial Regulatory Flexibility Determination

The Regulatory Flexibility Act of 1980 (FRA) establishes ''as a principle of regulatory issuance that agencies shall endeavor, consistent with the objective of the rule and of applicable statutes, to fit regulatory and informational requirements to the scale of the businesses, organizations, and governmental jurisdictions subject to regulation.'' To achieve that principle, the RFA requires agencies to solicit and consider flexible regulatory proposals and to explain the rationale for their actions. The RFA covers a wide-range of small entities, including small businesses, not-for-profit organizations, and small governmental jurisdictions.

Agencies must perform a review to determine whether a proposed or final rule will have a significant economic impact on a substantial number of small entities. If the determination is that it will, the agency must prepare a regulatory flexibility analysis (RFA) as described in the RFA. However, if an agency determines that a proposed or final rule is not expected to have a significant economic impact on a substantial number of small entities, section 605(b) of the 1980 act provides that the head of the agency may so certify and an RFA is not required. The certification must include a statement providing the factual basis for this determination, and the reasoning should be clear.

The FAA conducted the required review of this proposed rule. The engineering costs would be incurred by manufacturers of transport category airplanes, none of whom is a small entity. Testing equipment costs would be incurred by airplane manufacturers, insulation blanket fabricators, and chemical companies. The FAA has determined that none of these entities that are expected to conduct testing is small. Finally, the cost of a newly produced passenger airplane outfitted with burnthrough protection would be greater because of the proposed rule. The FAA cannot determine who would purchase these airplanes, but the incremental cost of burnthrough protection would not exceed $11,000 (in a four-engine widebody), an amount that would represent an insignificant percentage of the total cost of a new airplane.

Accordingly, pursuant to the Regulatory Flexibility Act, 5 U.S.C. 605(b), the Federal Aviation Administration certifies that this proposed rule would not have a significant economic impact on a substantial number of small entities.

International Trade Impact Assessment

The provisions of this proposed rule would have little or no impact on trade for U.S. firms doing business in foreign countries and foreign firms doing business in the United States.

Unfunded Mandates Reform Act

Title II of the Unfunded Mandates Reform Act of 1995 (the Act), enacted as Public Law 104–4 on March 22, 1995, requires each Federal agency, to the extent permitted by law, to prepare a written assessment of the effects of any Federal mandate in a proposed or final agency rule that may result in the expenditure by State, local, and tribal governments, in the aggregate, or by the private sector, of $100 million or more (adjusted annually for inflation) in any 1 year. Section 204(a) of the Act, 2 U.S.C. 1534(a), requires the Federal

agency to develop an effective process to permit timely input by elected officers (or their designees) of State, local, and tribal governments on a proposed ''significant intergovernmental mandate.''

A ''significant intergovernmental mandate'' under the Act is any provision in a Federal agency regulation that would impose an enforceable duty upon State, local, and tribal governments, in the aggregate, of $100 million (adjusted annually for inflation) in any 1 year. Section 203 of the Act, 2 U.S.C. 1533, which supplements section 204(a), provides that before establishing any regulatory requirements that might significantly or uniquely affect small governments, the agency shall have developed a plan that, among other things, provides for notice to potentially affected small governments, if any, and for a meaningful and timely opportunity to provide input in the development of regulatory proposals.

This proposed rule does not contain any significant Federal intergovernmental or private sector mandate. Therefore, the requirements of Title II of the Unfunded Mandates Reform Act of 1995 do not apply.

Executive Order 13132, Federalism

The FAA has analyzed this proposed rule under the principles and criteria of Executive Order 13132, Federalism. The FAA has determined that this action would not have a substantial direct effect on the States, on the relationship between the national Government and the States, or on the distribution of power and responsibilities among the various levels of government. Therefore, the FAA has determined that this notice of proposed rulemaking would not have federalism implications.

Environmental Analysis

FAA Order 1050.1D defines FAA actions that may be categorically excluded from preparation of a National Environmental Policy Act (NEPA) environmental assessment or environmental impact statement. In accordance with FAA Order 1050.1D, appendix 4, paragraph 4(j), this rulemaking action qualifies for a categorical exclusion.

Energy Impact

The energy impact of the proposed rule has been assessed in accordance with the Energy Policy and Conservation Act (EPCA) and Public Law 94–163, as amended (42 U.S.C. 6362). It has been determined that it is not a major regulatory action under the provisions of the EPCA.

Regulations Affecting Intrastate Aviation in Alaska

Section 1205 of the FAA Reauthorization Act of 1996 (110 Stat. 3213) requires the Administrator, when modifying regulations in Title 14 of the CFR in a manner affecting intrastate aviation in Alaska, to consider the extent to which Alaska is not served by transportation modes other than aviation, and to establish such regulatory distinctions as he or she considers appropriate. Because this proposed rule would apply to the certification of future designs of transport category airplanes and their subsequent operation, it could, if adopted, affect intrastate aviation in Alaska. The FAA therefore specifically requests comments on whether there is justification for applying the proposed rule differently to intrastate operations in Alaska.

List of Subjects

14 CFR Part 25

Aircraft, Aviation safety, Reporting and recordkeeping requirements.

14 CFR Part 91

Aircraft, Aviation safety, Reporting and recordkeeping requirements.

14 CFR Part 121

Aircraft, Aviation safety, Reporting and recordkeeping requirements, Safety, Transportation.

14 CFR Part 125

Aircraft, Aviation safety, Reporting and recordkeeping requirements.

14 CFR Part 135

Aircraft, Aviation safety, Reporting and recordkeeping requirements.

The Proposed Amendments

In consideration of the foregoing, the Federal Aviation Administration proposes to amend parts 25, 91, 121, 125, and 135 of Title 14 of the Code of Federal Regulations as follows:

PART 25—AIRWORTHINESS STANDARDS: TRANSPORT CATEGORY AIRPLANES

1. The authority citation for part 25 continues to read as follows:

Authority: 49 U.S.C. 106(g), 40113, 44701–44702, and 44704.

2. Amend § 25.853 by revising paragraph (a) to read as follows:

§ 25.853 Compartment interiors.

* * * * *

(a) Except for thermal/acoustic insulation materials, materials (including finishes or decorative surfaces applied to the materials) must meet the applicable test criteria prescribed in part I of appendix F of this part, or other approved equivalent methods, regardless of the passenger capacity of the airplane.

* * * * *

3. Amend § 25.855 by revising paragraph (d) to read as follows:

§ 25.855 Cargo or baggage compartments.

* * * * *

(d) Except for thermal/acoustic insulation materials, all other materials used in the construction of the cargo or baggage compartment must meet the applicable test criteria prescribed in part I of appendix F of this part or other approved equivalent methods.

* * * * *

4. Add § 25.856 to read as follows:

§ 25.856 Insulation materials.

Thermal/acoustic insulation material must meet the flame propagation test requirements of part VI of appendix F of this part, or other FAA-approved equivalent test requirements. In addition, for airplanes with a passenger capacity of 20 or greater, insulation materials (including the means of fastening the materials to the fuselage) installed in the lower half of the airplane fuselage must meet the flame penetration resistance test requirements of part VII of appendix F of this part, or other FAA-approved equivalent test requirements.

5. Amend appendix F to part 25 as follows:

a. In part I, paragraph (a)(1)(ii), by removing the words ''thermal and acoustical insulation and insulation covering'' and ''insulation blankets'' from the first sentence.

b. In part I, by removing and reserving paragraph (a)(2)(i).

c. By adding parts VI and VII to read as follows:

Appendix F to Part 25

* * * * *

Part VI–Test Method to Determine the Flammability and Flame Propagation Characteristics of Thermal/Acoustic Insulation Materials

This test method is used to evaluate the flammability and flame propagation characteristics of thermal/acoustic insulation when exposed to both a radiant heat source and a flame.

(a) *Definitions*—(1) *Thermal acoustic insulation.* Thermal/acoustic insulation is defined as a material or system of materials used to provide thermal and/or acoustic protection. Examples include a film-covering material encapsulating a core material such as fiberglass or other batting material and foams.

(2) *Radiant heat source.* The radiant heat source is an air-gas fueled radiant heat energy panel or equivalent.

(b) *Test apparatus* (as schematically shown in figure 1).

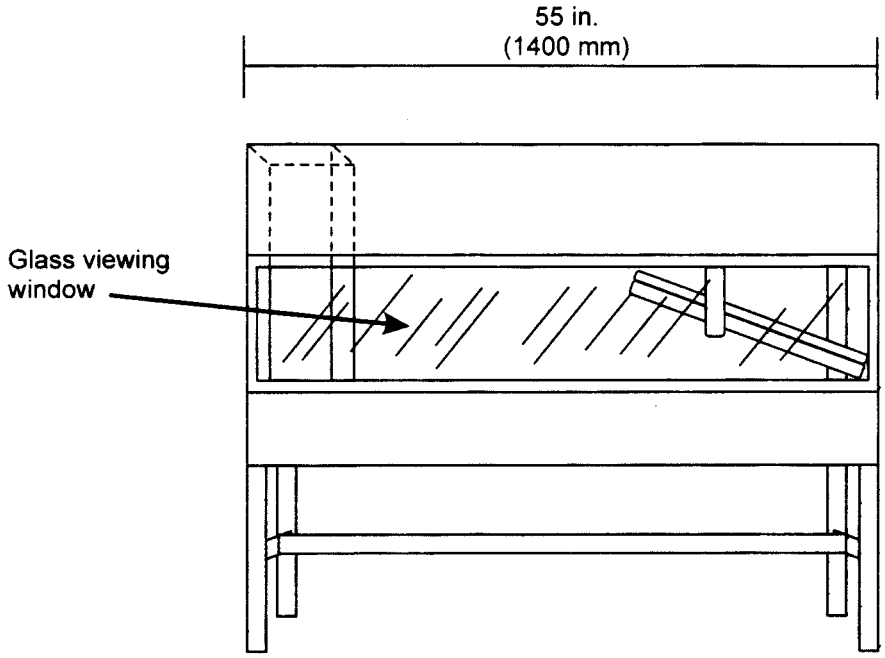

Figure 1 - Radiant Panel Test Chamber

(1) *Radiant panel test chamber.* Tests shall be conducted in a radiant panel test chamber (see figure 1). The test chamber shall be located under an exhaust hood to facilitate clearing the chamber of smoke after each test. The radiant panel test chamber shall consist of an enclosure 55 inches (1400 mm) long by 19.5 (500 mm) deep by 28 (710 mm) to 30 inches (maximum) (762 mm) above the test specimen. The sides, ends, and top shall be insulated with a fibrous ceramic insulation such as Kaowool M™ board. The front side shall be provided with an approximately 52- by 10-inch (1321 by 254mm) draft free, high temperature, glass observation window, to facilitate viewing the sample during testing. Below the window is a door, which provides access to the movable specimen platform holder. The bottom of the test chamber shall consist of a sliding steel platform, which has provisions for securing the test specimen holder in a fixed and level position. The chamber shall have an internal chimney with exterior dimensions of 5.1 inches (129mm) wide, by 16.2 inches (411 mm) deep by 13 inches (330mm) high at the opposite end of the chamber from the radiant energy source. The interior dimensions are 4.5 inches (114mm) wide by 15.6 inches (395mm) deep. The chimney extends to the top of the chamber (see figure 2).

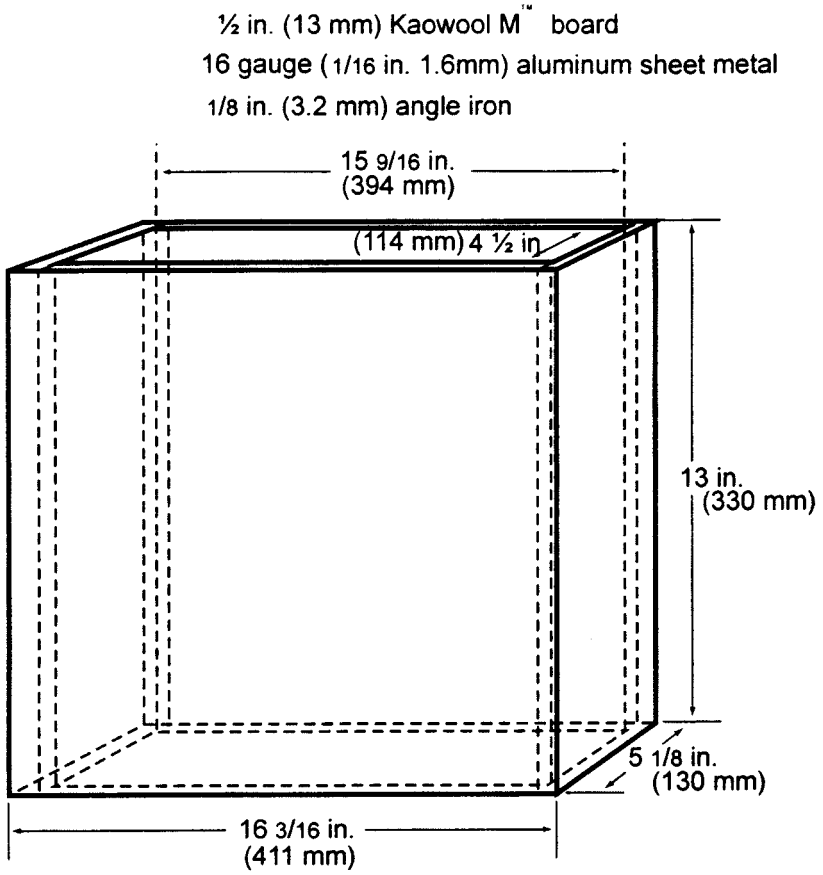

Figure 2 - Internal Chimney

(2) *Radiant heat source.* The radiant heat energy source shall be a panel of porous refractory material mounted in a cast iron frame or equivalent. The panel shall have a radiation surface of 12 by 18 inches (305 by 457mm). The panel shall be capable of operating at temperatures up to 1500°F (816°C). See figure 3. An equivalent panel must satisfy the calibration conditions and produce test results equivalent to the air-gas panel, for any material tested.

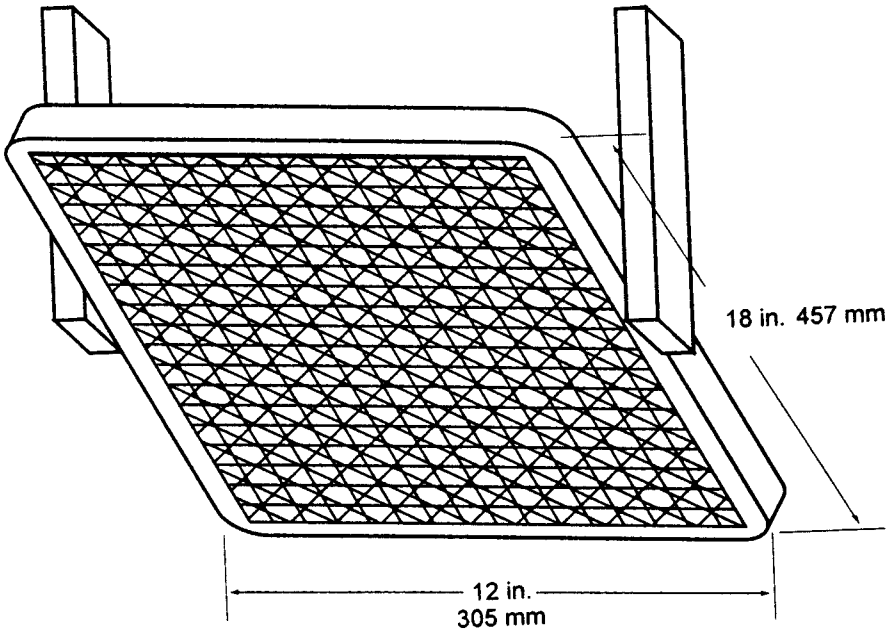

Figure 3a - Air-Propane Radiant Panel

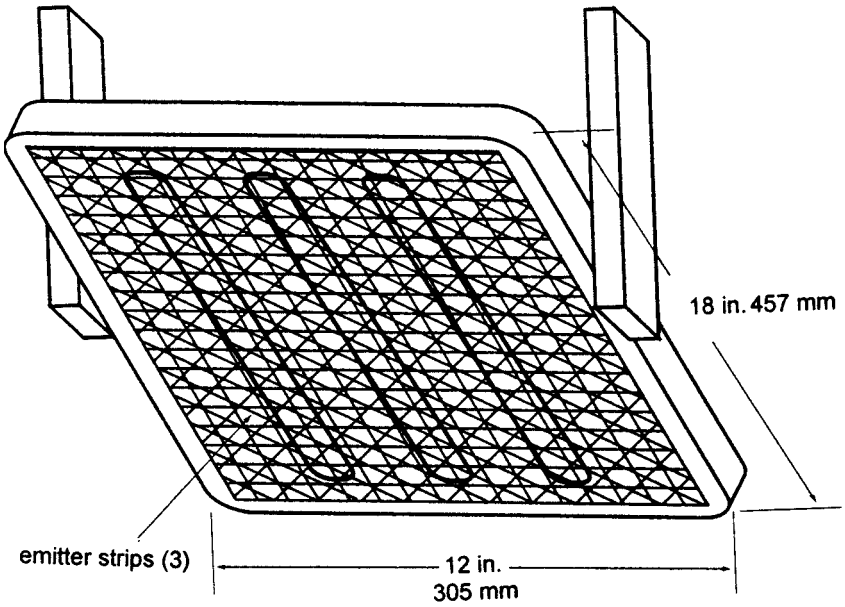

Figure 3b - Electric panel

(i) *Radiant panel heating system.* The radiant panel fuel shall be propane (liquid petroleum gas—2.1 UN 1075). The panel fuel system shall consist of a venturi-type aspirator for mixing gas and air at approximately atmospheric pressure. Suitable instrumentation will be necessary for monitoring and controlling the flow of fuel and air to the panel. Instrumentation shall include an air flow gauge, an air flow regulator, and a gas pressure gauge.

(ii) *Radiant panel placement.* The panel shall be mounted in the chamber at 30§ to the horizontal specimen plane.

(3) *Specimen holding system.* (i) The sliding platform serves as the housing for test specimen placement. Brackets may be attached (via wing nuts) to the top lip of the platform in order to accommodate various thicknesses of test specimens. A sheet of refractory material may be placed and supported by the lip in the open bottom (base) of the sliding platform for samples that do not require height compensation. The refractory material may be placed on the bottom of the brackets to hold the test specimen (for height requirement) if necessary. See figure 4.

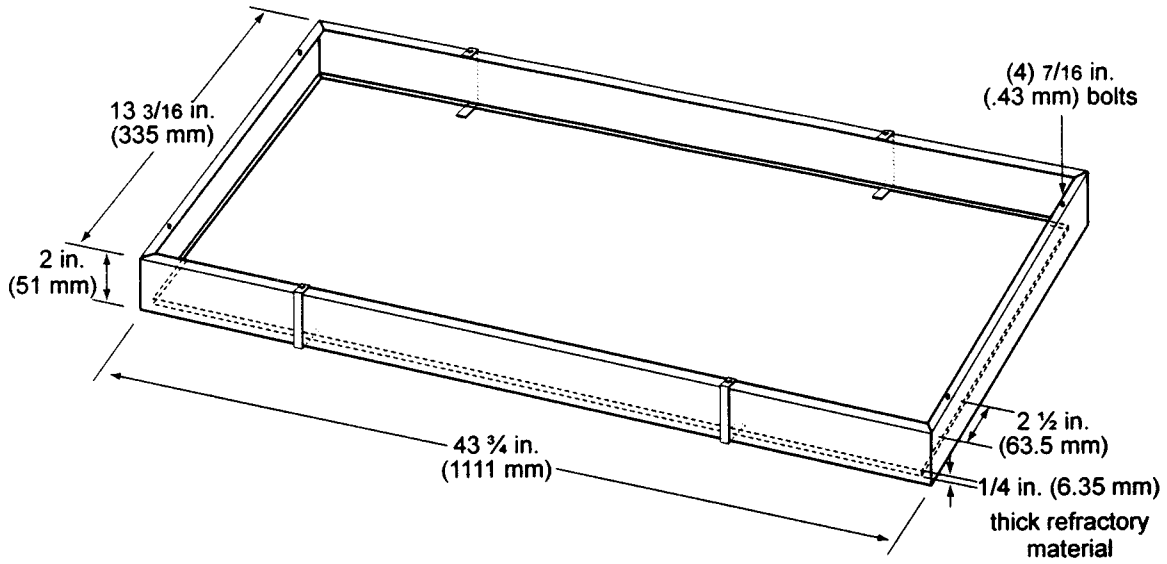

Figure 4 - Sliding Platform

(ii) A ½ inch (13mm) piece of Kaowool M™ board or other high temperature material measuring 41½ by 8¼ inches (1054 by 210mm) shall be attached to the back side of the platform. This board will serve as a heat retainer and will protect the test specimen from excessive preheating. The height of this board must not be too high such that it impedes the sliding platform movement (in and out) of the test chamber.

(iii) The test specimen shall be placed horizontally on the refractory base (or brackets). A stainless steel retaining frame (AISI Type 300 UNA–NO8330), or equivalent, having a thickness of 0.078 inches (1.98mm) and overall dimensions of 44 ¾ by 12¾ inches (1137 by 320mm) with a specimen opening of 40 by 7⅞ inches (1016 by 140mm) shall be placed on top of the test specimen. The retaining frame shall have two ½ inch (12.7mm) holes drilled at each end for positioning the frame to the two stud bolts at each end of the sliding platform. See figure 5.

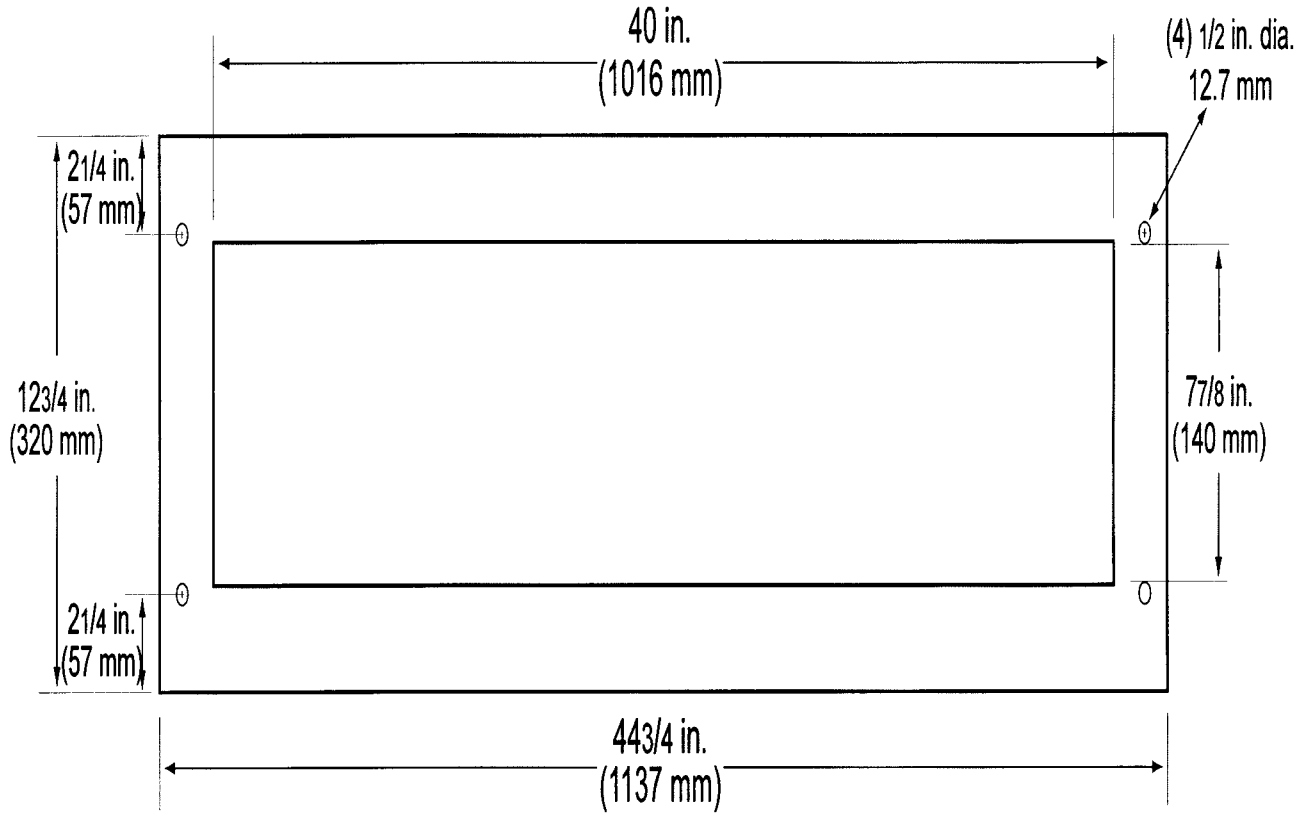

Figure 5 - Retaining Frame

(iv) A securing frame (acting as a clamping mechanism) constructed of mildsteel may be placed over the test specimen. The securing frame overall dimensions are 42½ by 10½ inches (1080 by 267mm) with a specimen opening of 39½ by 7½ inches (1003 by 190mm). Hence, the exposed area of test specimen exposed to the radiant panel is 39¼ by 7¼ inches (996 by 184mm). See figure 6. It is not necessary to physically fasten the securing frame over the test specimen due to the weight of the frame itself.

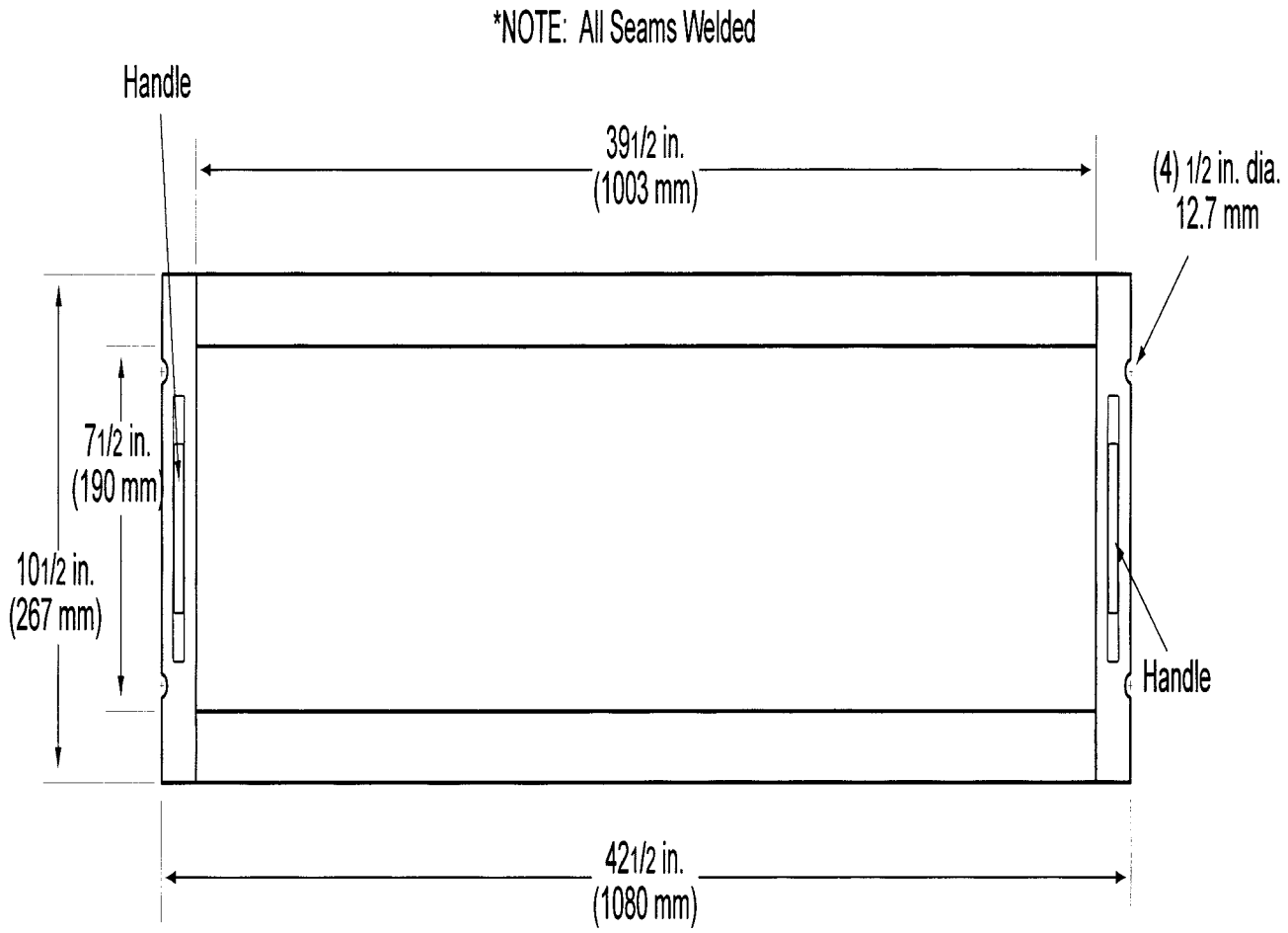

Figure 6 - Securing Frame

(4) *Pilot burner.* The pilot burner used to ignite the specimen is a Bernzomatic ™ commercial propane venturi torch with an axially symmetric burner tip having a propane supply tube with an orifice diameter of 0.006 inches (0.15mm). The length of the burner tube is 2⅞ inches (71mm). The propane flow is adjusted via gas pressure through an in-line regulator to produce a blue inner cone length of ¾ inch (19mm). A ¾ inch (19mm) guide (such as a thin strip of metal) may be spot welded to the top of the burner to aid in setting the flame height. There shall be a means provided to move the burner out of the ignition position so that the flame is horizontal and at least 2 inches (50mm) above the specimen plane. See figure 7.

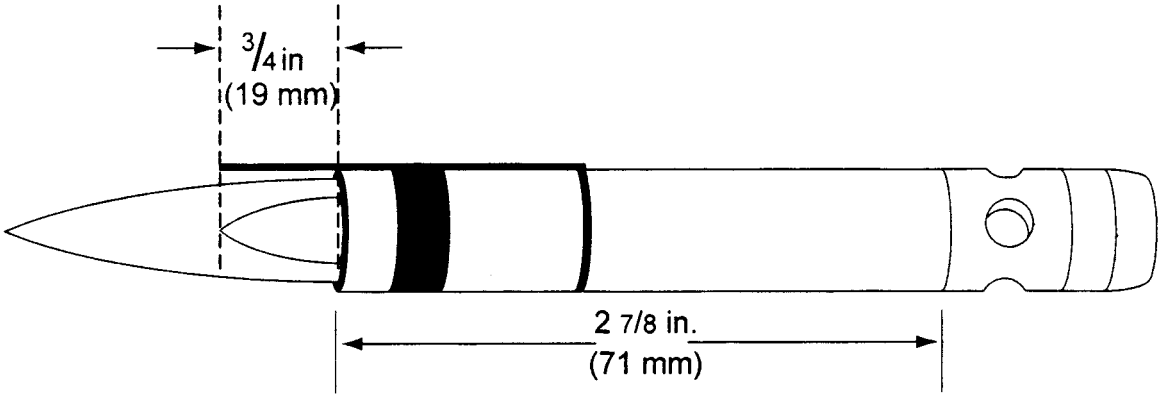

Figure 7 - Propane Pilot Burner

(5) *Thermocouples.* A 24 American Wire Gauge (AWG) Type K (Chromel-Alumel) thermocouple shall be installed in the test chamber for temperature monitoring. It shall be inserted into the chamber through a small hole drilled through the back of the chamber. The thermocouple shall be placed such that it extends 11 inches (279mm) out from the back of the chamber wall, 11½ inches (292mm) from the right side of the chamber wall, and is 2 inches (51mm) below the radiant panel. The use of other thermocouples is optional.

(6) *Calorimeter.* The calorimeter shall be a one inch cylindrical water-cooled, total heat flux density, foil type Gardon Gage that has a range of 0 to 5 BTU/ft ^{2}-second (0 to 5.6 Watts/cm^2).

(7) *Calorimeter calibration specification and procedure.*

(i) *Calorimeter Specification.*

(A) Foil diameter shall be 0.25 ±0.005 inches (6.35 ±0.13mm).

(B) Foil thickness shall be 0.0005 ±0.0001 inches (0.013 ±0.0025mm).

(C) Foil material shall be thermocouple grade Constantan.

(D) Temperature measurement shall be a Copper Constantan thermocouple.

(E) The copper center wire diameter shall be 0.0005 inches (0.013mm).

(F) The entire face of the calorimeter shall be lightly coated with ''Black Velvet'' paint having an emissivity of 96 or greater.

(ii) *Calorimeter calibration.*

(A) The calibration method shall be by comparison to a like standardized transducer.

(B) The standardized transducer shall meet the specification given in paragraph (b)(6) of this part of this appendix.

(C) It shall be calibrated against a primary standard by the National Institute of Standards and Technology (NIST).

(D) The method of transfer shall be a heated graphite plate.

(E) The graphite plate shall be electrically heated, have a clear surface area on each side of the plate of at least 2 by 2 inches (51 by 51mm), and be ⅛ inch ±1/16 inch thick (3.2 ±1.6mm).

(F) The 2 transducers shall be centered on opposite sides of the plates at equal distances from the plate.

(G) The distance of the calorimeter to the plate shall be no less than 0.0625 inches (1.6mm), nor greater than 0.375 inches (9.5mm).

(H) The range used in calibration shall be at least 0–3.5 BTUs/ft ^{2} second (0–3.9Watts/cm^2) and no greater than 0–5.6 BTUs/ft ^{2} second (0–5 Watts/cm^2.

(I) The recording device used must record the 2 transducers simultaneously or at least within 1/10 of each other.

(8) *Calorimeter Fixture.* With the sliding platform pulled out of the chamber, install the calorimeter holding frame. The frame is 13⅛ inches (333mm) deep (front to back) by 8 inches (203mm) wide and rests on the top of the sliding platform. It is fabricated of ⅛ inch (3.2mm) flat stock steel and has an opening that accommodates a ½ inch (12.7mm) thick piece of Kaowool M™ board, which is level with the top of the sliding platform. The board has three 1 inch (25.4mm) diameter holes drilled through the board for calorimeter insertion. The distance from the outside frame (right side) to the centerline of the first hole (''zero'' position) is 1⅞ inches (47mm). The distance between the centerline of the first hole to the centerline of the second hole is 2 inches (51mm). It is also the same distance from the centerline of the second hole to the centerline of the third hole. See figure 8.

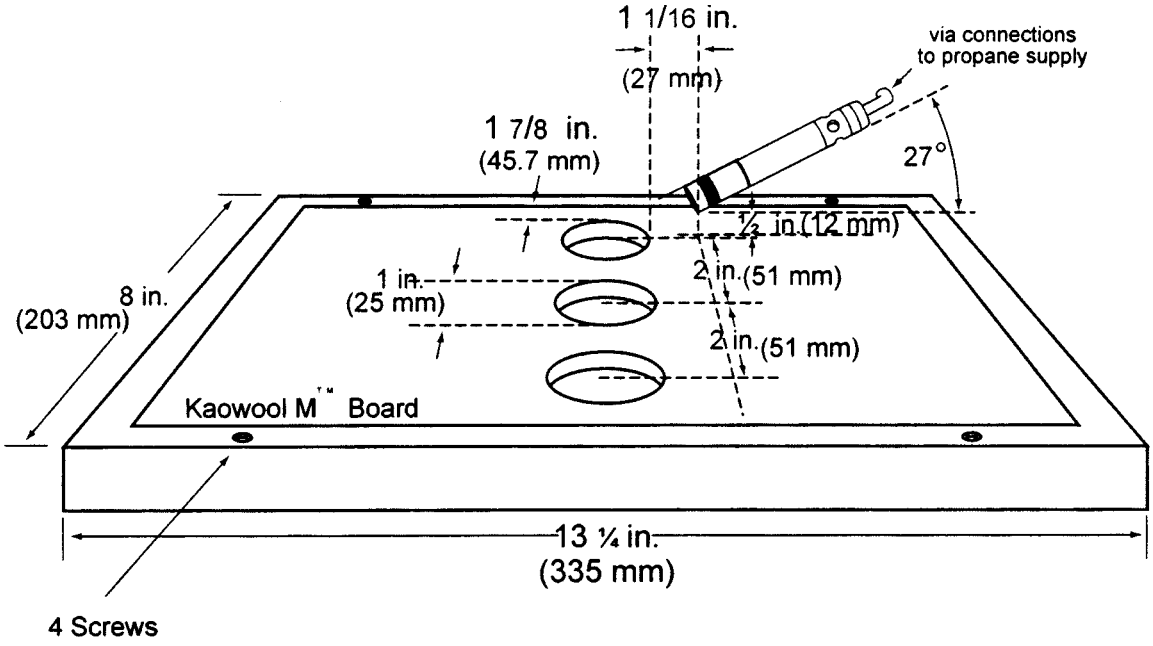

Figure 8 - Calorimeter Holding Frame

(9) *Instrumentation.* A calibrated recording device with an appropriate range or a computerized data acquisition system shall be provided to measure and record the outputs of the calorimeter and the thermocouple. The data acquisition system must be capable of recording the calorimeter output every second during calibration.

(10) *Timing device.* A stopwatch or other device, accurate to ±1 second/hour, shall be provided to measure the time of application of the pilot burner flame.

(c) *Test specimens.*

(1) *Specimen preparation.* A minimum of three test specimens shall be prepared and tested.

(2) *Construction.* Test specimens shall include all materials used in construction of the insulation (including batting, film, scrim, tape etc.). Cut a piece of core material such as foam or fiberglass, 43 inches long (1092mm) by 11 inches (279mm) wide. Cut a piece of film cover material (if used) large enough to cover the core material. There are a number of ways to prepare the sample. These include stapling the film cover around the ends (as the ends are not exposed to the radiant heat source), wrapping the core material and taping it at the bottom, and heat sealing the sample. The specimen thickness must be of the same thickness as installed in the airplane.

(d) *Specimen conditioning.* The specimens shall be conditioned at 70 ±5 °F (21 ±2 °C) and 55% ±10% relative humidity, for a minimum of 24 hours prior to testing.

(e) *Calibration.* (1) With the sliding platform out of the chamber, install the calorimeter holding frame. Push the platform back into the chamber and insert the calorimeter into the first hole (''zero'' position). See figure 8. Close the bottom door located below the sliding platform. The centerline of the calorimeter is 1⅞ inches (46mm) from the end of the holding frame. The distance from the centerline of the calorimeter to the radiant panel surface at this point is 7.5 inches ±⅛ (191 mm ±3). Prior to igniting the radiant panel, ensure that the calorimeter face is clean and that there is water running through the calorimeter.

(2) Ignite the panel. Adjust the fuel/air mixture to achieve 1.5 BTUs/ft^2-second ±5% (1.8 Watts/cm^2 ±5%) at the ''zero'' position. If using an electric panel, set the power controller to achieve the proper heat flux. Allow the unit to reach steady state (this may take up to 1 hour). The pilot burner is off during this time.

(3) After steady-state conditions have been reached, move the calorimeter 2 inches (51mm) from the ''zero'' position (first hole) to the second position and record the heat flux. Move the calorimeter to the third position and record the heat flux. Allow enough time at each position for the calorimeter to stabilize.

(4) Open the bottom door, remove the calorimeter and holder fixture. Use caution as the fixture is very hot.

(f) *Test procedure.* (1) Ignite the pilot burner. Ensure that it is at least 2 inches (51mm) above the top of the platform. The burner must not contact the specimen until the test begins.

(2) Place the test specimen in the sliding platform holder. Ensure that the test sample surface is level with the top of the platform. At ''zero'' point, the specimen surface is 7½ inches ±⅛ inch (191mm ±3) below the radiant panel.

(3) With film/fiberglass assemblies, it may be necessary to puncture small holes in the film cover to purge any air inside. This allows the operator to maintain the proper test specimen position (level with the top of the platform). The holes should be made in the sides/ and or the corners of the test specimen using a needle-like tool.

(4) Place the retaining frame over the test specimen. The securing frame may be used if the samples have been stapled and tend to shrink away from the radiant heat source. It may be necessary (due to compression) to adjust the sample (up or down) in order to maintain the distance from the sample to the radiant panel (7½ inches ±⅛ inch (191mm±3) at ''zero'' position).

(5) Immediately push the sliding platform into the chamber and close the bottom door.

(6) Bring the pilot burner flame into contact with the center of the specimen at the ''zero'' point and simultaneously start the timer. The pilot burner shall be at a 27° angle with the sample and be ½ inch (12mm) above the sample. See figure 8. A stop, as shown in figure 9, allows the operator to position the burner in the correct position each time.

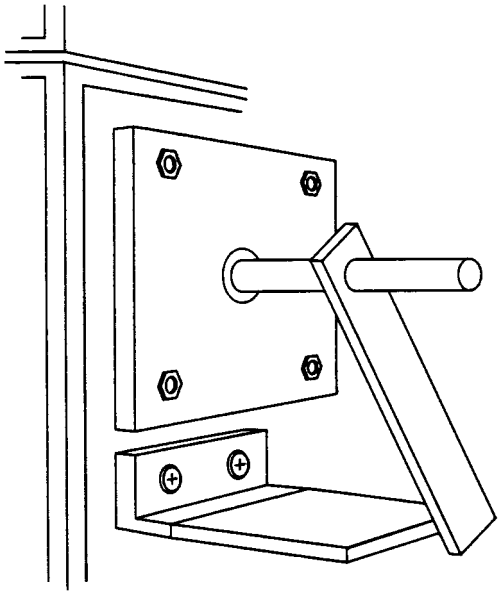

Figure 9 - Propane Burner Stop

(7) Leave the burner in position for 15 seconds and then remove to a position at least 2 inches (51mm) above the specimen.

(g) *Report.* (1) Identify and describe the specimen being tested.

(2) Report any shrinkage or melting of the test specimen.

(3) Report the flame time.

(4) Report the after flame time.

(h) *Requirements.* (1) No flaming beyond 2 inches (51mm) to the left of the centerline of the point of pilot flame application is allowed.

(2) Of the 3 specimens tested, only 1 specimen may have an after flame. That after flame may not exceed 3 seconds.

Part VII—Test Method to Determine the Burnthrough Resistance of Thermal/Acoustic Insulation Materials.

The following test method is used to evaluate the burnthrough resistance characteristics of aircraft thermal-acoustic insulation materials when exposed to a high intensity open flame.

(a) *Definitions*—(1) *Burnthrough time.* The burnthrough time is measured at the inboard side of each of the insulation blanket specimens. The burnthrough time is defined as the time required, in seconds, for the burner flame to penetrate the test specimen, and/or the time required for the heat flux to reach 2.0 Btu/ft^{2}sec on the inboard side, at a distance of 12 inches from the front surface of the insulation blanket test frame, whichever is sooner.

(2) *Specimen set.* A specimen set consists of two insulation blanket specimens. Both specimens must represent the same production insulation blanket construction and materials, proportioned to correspond to the specimen size.

(3) *Insulation blanket specimen.* The insulation blanket specimen is one of two specimens positioned in either side of the test rig, at an angle of 30° with respect to vertical.

(b) *Apparatus*—(1) *The arrangement of the test apparatus* is shown in figures 1 and 2 and shall include swinging the burner away from the test specimen during warm-up.

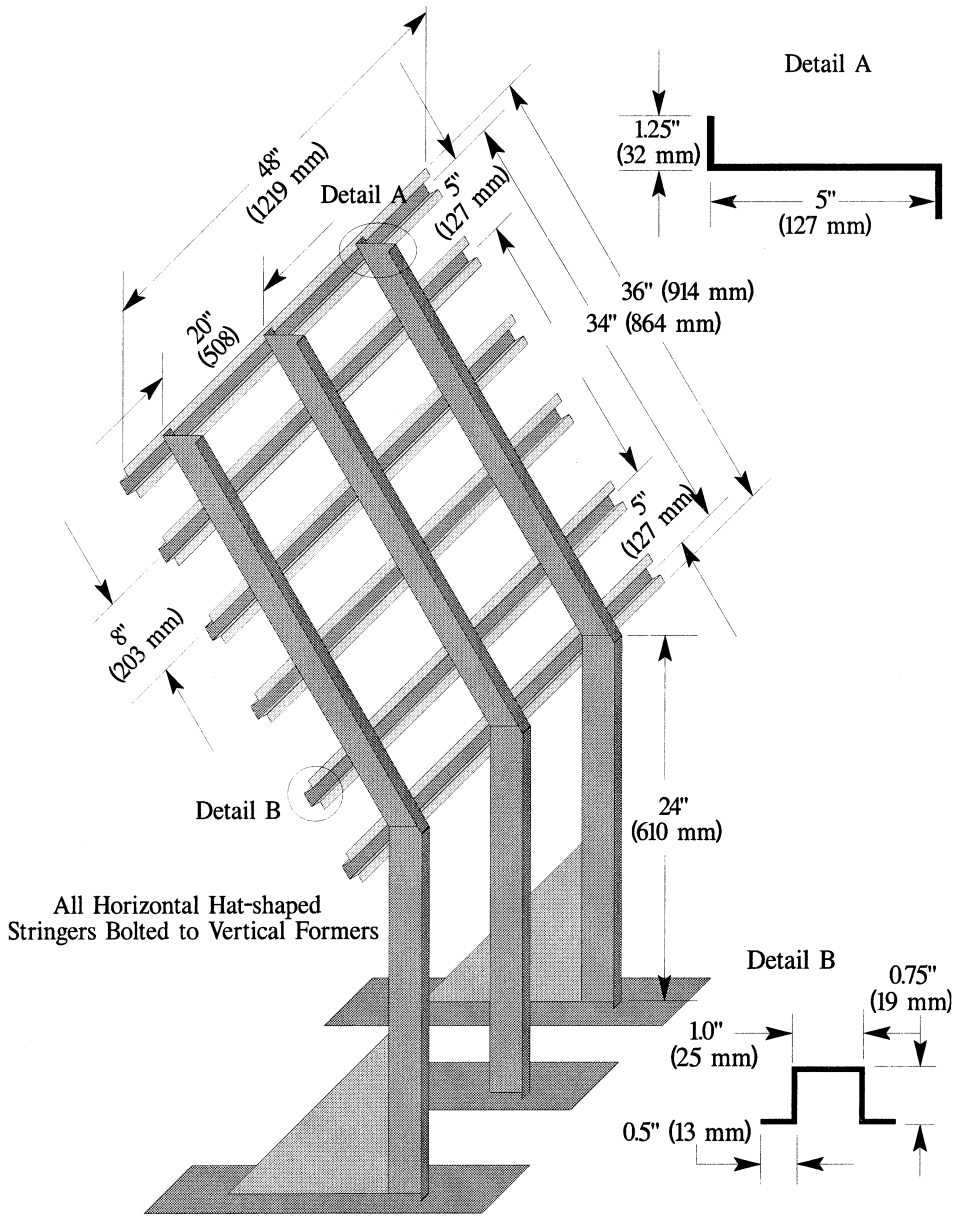

All Material 0.125" (3 mm) Thickness Except Center Vertical Former, 0.1875" (5 mm) Thick

Figure 1--Burnthrough Test Apparatus Specimen Holder

(2) *Test burner.* The test burner shall be a modified gun-type such as the Park Model DPL 3400. Flame characteristics may be enhanced with the optional use of a static disc turbulator or a temperature compensation fuel nozzle.

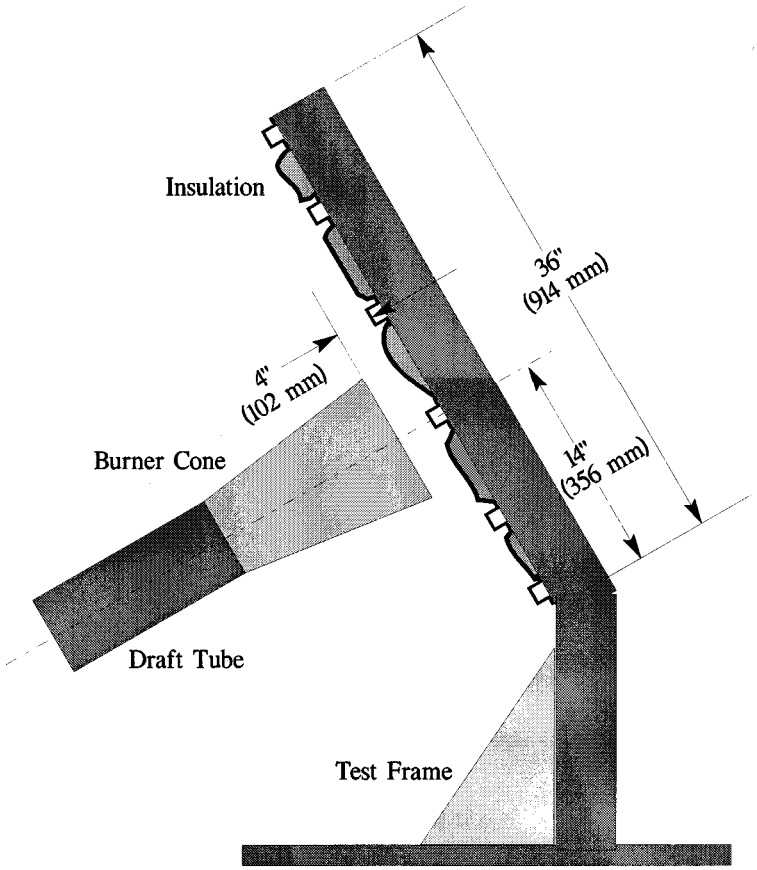

Figure 2--Burnthrough Test Apparatus

(i) *Nozzle.* A nozzle is required to maintain the fuel pressure to yield a nominal 6.0 gal/hr (0.378 L/min) fuel flow. A Monarch manufactured 80° PL (hollow cone) nozzle nominally rated at 6.0 gal/hr at 100 lb/in^2 (0.71 MPa) has been found to deliver a proper spray pattern. Minor deviations to the fuel nozzle spray angle, fuel pressure, or other similar parameters are acceptable if the nominal fuel flow rate and temperature and heat flux measurements conform to the requirements of paragraph (e) of this part of this appendix.

(ii) *Burner cone.* A 12 ±0.125-inch (305 ±6 mm) burner extension cone shall be installed at the end of the draft tube. The cone shall have an opening 6 ±0.125-inch (152 ±6 mm) high and 11 ±0.125-inch (280 ±6 mm) wide (figure 3).

BILLING CODE 4910–13–U

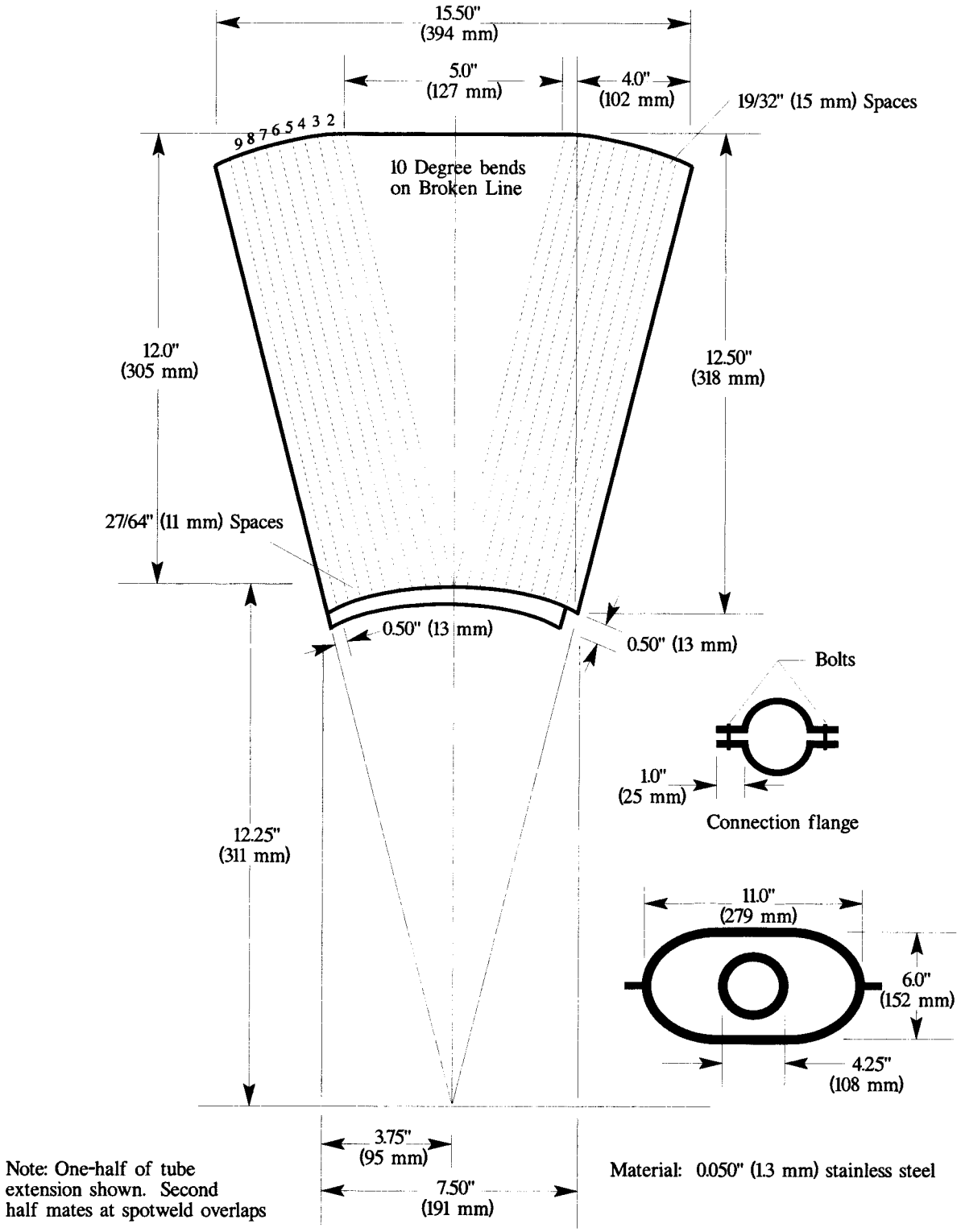

Figure 3--Burner Draft Tube Extension Cone

BILLING CODE 4910–13–C

(iii) *Fuel.* JP–8, Jet A, or their international equivalent has been found to satisfactorily deliver a 6.0 ±0.2 gal/hr flow rate. If this fuel is unavailable, ASTM K2 fuel (Number 2 grade kerosene) or ASTM D2 fuel (Number 2 grade fuel oil or Number 2 diesel fuel) are acceptable if the nominal fuel flow rate, temperature and heat flux measurements conform to the requirements of paragraph (e) of this part of this appendix.

(iv) *Fuel pressure regulator.* A fuel pressure regulator, adjusted to deliver 6.0 gal/hr (0.378 L/min) nominal, shall be provided. An operating fuel pressure of 100 lb/in^2 for a 6.0 gal/hr 80° spray angle nozzle (such as a PL type) has been found to be satisfactory to deliver 6.0 ±0.2 gal/hr (0.378 L/min).

(3) *Calibration rig and equipment.* (i) A calibration rig shall be constructed to incorporate a calorimeter and thermocouple rake for the measurement of both heat flux and temperature. A combined temperature and heat flux calibration rig enables a quick transition between these devices, so that the influence of air intake velocity on heat flux and temperature can be analyzed without necessitating removal of the calibration rig. Individual calibration rigs are also acceptable.

(ii) *Calorimeter.* The calorimeter shall be a total heat flux, foil type Gardon Gage of an appropriate range such as 0–20 Btu/ft^2-sec (0–22.7 W/cm^2), accurate to ±3% of the indicated reading. The heat flux calibration method shall be in accordance with appendix F, part VI, paragraph (b)(7).

(iii) *Calorimeter mounting.* The calorimeter shall be mounted in a 6- by 12- ±0.125 inch (152- by 305- ±3 mm) by 0.75 ±0.125 inch (19 mm ±3 mm) thick insulating block which is attached to a calibration rig for attachment to the test rig during calibration (figure 4). The insulating block shall be monitored for deterioration and replaced when necessary. The mounting shall be adjusted as necessary to ensure that the calorimeter face is parallel to the exit plane of the test burner cone.

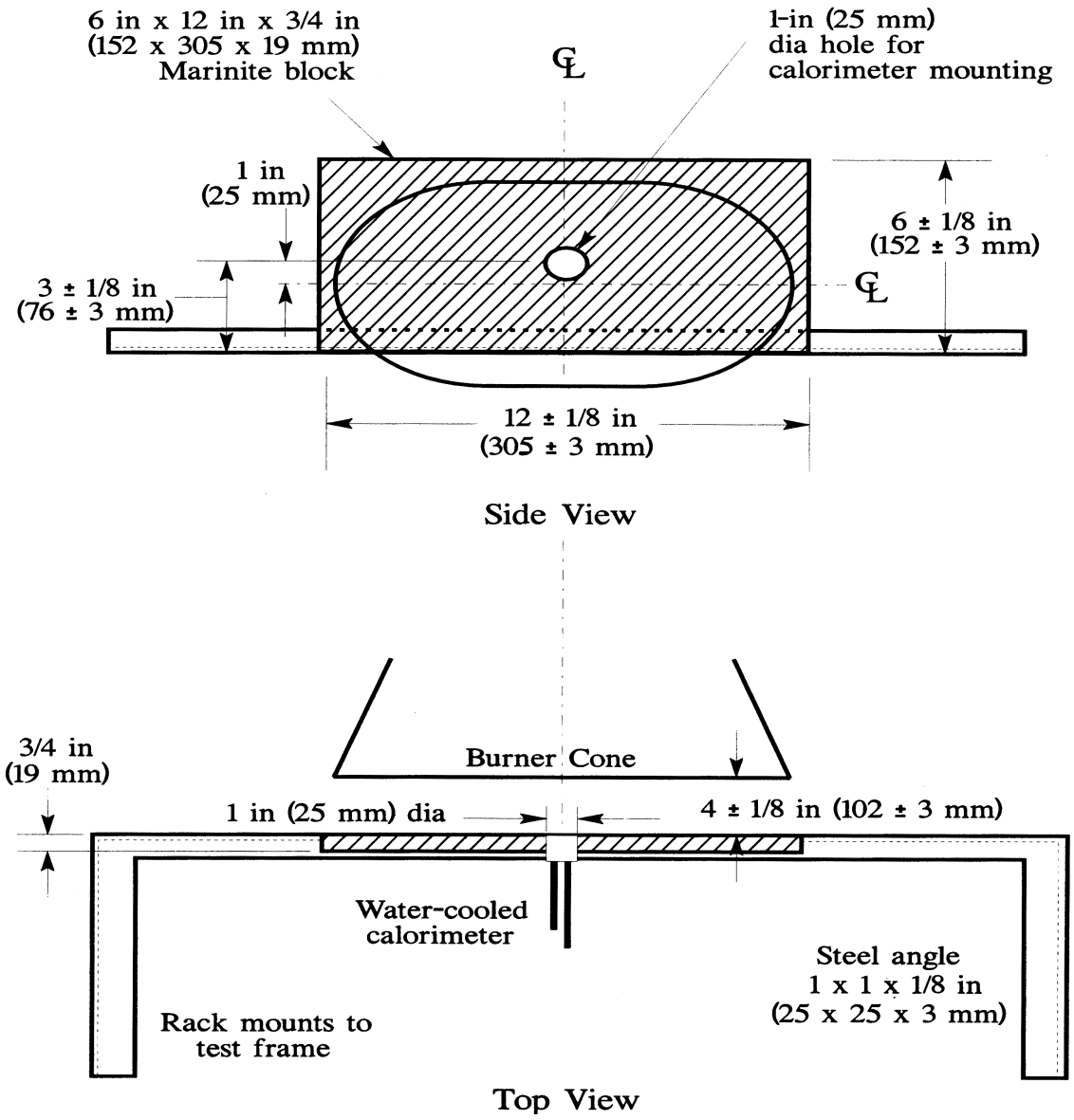

Figure 4--Calorimeter Position Relative to Burner Cone

(iv) *Thermocouples.* Seven ⅛-inch ceramic packed, metal sheathed, type K (Chromel-alumel), grounded junction thermocouples with a nominal 24 American Wire Gauge (AWG) size conductor shall be provided for calibration. The thermocouples shall be attached to a steel angle bracket to form a thermocouple rake for placement in the calibration rig during burner calibration (figure 5).

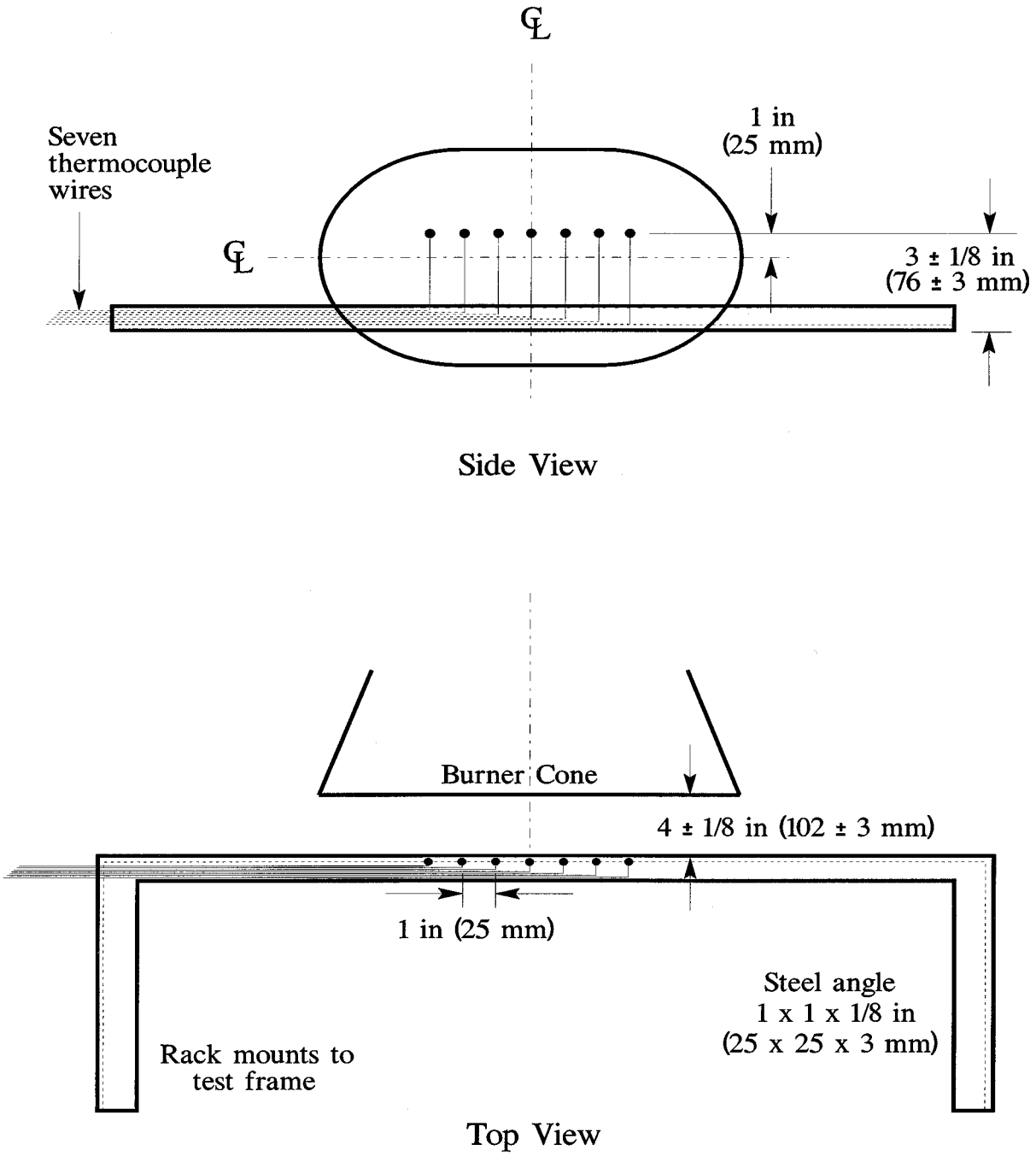

Figure 5. Thermocouple Rake Position Relative to Burner Cone

(v) *Air velocity meter.* A vane-type air velocity meter must be used to calibrate the velocity of air entering the burner. An Omega Engineering Model HH30A has been shown to be satisfactory. A suitable adapter used to attach the measuring device to the inlet side of the burner is required to prevent air from entering the burner other than through the device, which would produce erroneously low readings.

(4) *Test specimen mounting frame.* The mounting frame for the test specimens shall be fabricated of ⅛-inch thick steel as shown in figure 1, except for the center vertical former, which should be ¼-inch thick to minimize warpage. The specimen mounting frame stringers (horizontal) should be bolted to the test frame formers (vertical) such that the expansion of the stringers will not cause the entire structure to warp. The mounting frame shall be used for mounting the two insulation blanket test specimens as shown in figure 2.

(5) *Backface calorimeters.* Two total heat flux Gardon type calorimeters shall be mounted above the insulation test specimens on the back side (cold) area of the test specimen mounting frame as shown in figure 6. The calorimeters must be positioned along the same plane as the burner cone centerline, at a distance of 4 inches from the centerline of the test frame. The heat flux calibration shall be in accordance with appendix F, part VI, paragraph (b)(7).

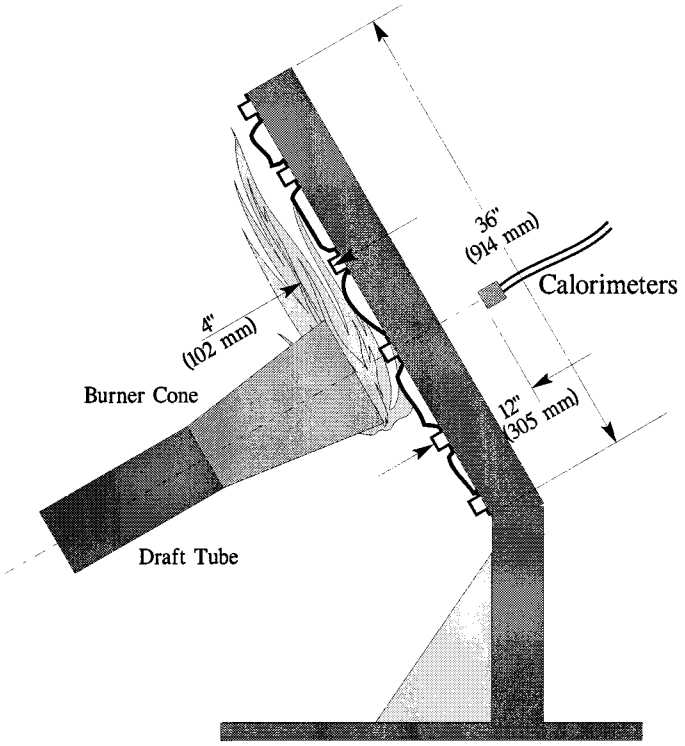

Fiigure 6--Position of Backface Calorimeters Relative to Test Specimen Frame

(6) *Instrumentation.* A recording potentiometer or other suitable calibrated instrument with an appropriate range shall be provided to measure and record the outputs of the calorimeter and the thermocouples.

(7) *Timing device.* A stopwatch or other device, accurate to +/-1%, shall be provided to measure the time of application of the burner flame and burnthrough time.

(8) *Test chamber.* Tests should be performed in a suitable chamber to reduce or eliminate the possibility of test fluctuation due to air movement. The chamber must have a minimum floor area of 10 by 10 feet.

(i) *Ventilation hood.* The test chamber must be provided with an exhausting system capable of removing the products of combustion expelled during tests.

(c) *Test specimens*—(1) *Specimen preparation.* A minimum of three specimen sets of the same construction and configuration shall be prepared for testing.

(2) *The insulation blanket test specimen.* (i) For batt-type materials such as fiberglass, the constructed, finished blanket specimen assemblies shall be 32 inches wide by 36 inches long, exclusive of heat sealed film edges.

(ii) For rigid and other non-conforming types of insulation materials, the finished test specimens shall fit into the test rig in such a manner as to replicate the actual in-service installation.

(3) *Construction.* Each of the specimens tested shall be fabricated using the principal components (i.e., insulation, fire barrier material if used, and moisture barrier film) and assembly processes (representative seams and closures).

(i) *Fire barrier material.* If the insulation blanket is constructed with a fire barrier material, the fire barrier material shall be placed in a manner reflective of the installed arrangement (e.g., if the material will be placed on the outboard side of the insulation material, inside the moisture film, it must be placed accordingly in the test specimen).

(ii) *Insulation material.* Blankets that utilize more than one variety of insulation (composition, density, etc.) shall have specimen sets constructed that reflect the insulation combination used. If, however, several blanket types use similar insulation combinations, it is not necessary to test each combination if it is possible to bracket the various combinations.

(iii) *Moisture barrier film.* If a production blanket construction utilizes more than one type of moisture barrier film, separate tests must be performed on each combination. For example, if a polyimide film is used in conjunction with an insulation in order to enhance the burnthrough capabilities, the same insulation with a polyvinyl fluoride must also be tested.

(iv) *Installation on test frame.* The blanket test specimens must be attached to the test frame using 12 steel spring type clamps as shown in figure 7. The clamps must be used to hold the blankets in place in both of the outer vertical formers, as well as the center vertical former (4 clamps per former). Place the top and bottom clamps 6 inches from the top and bottom of the test frame, respectively. Place the middle clamps 8 inches from the top and bottom clamps.

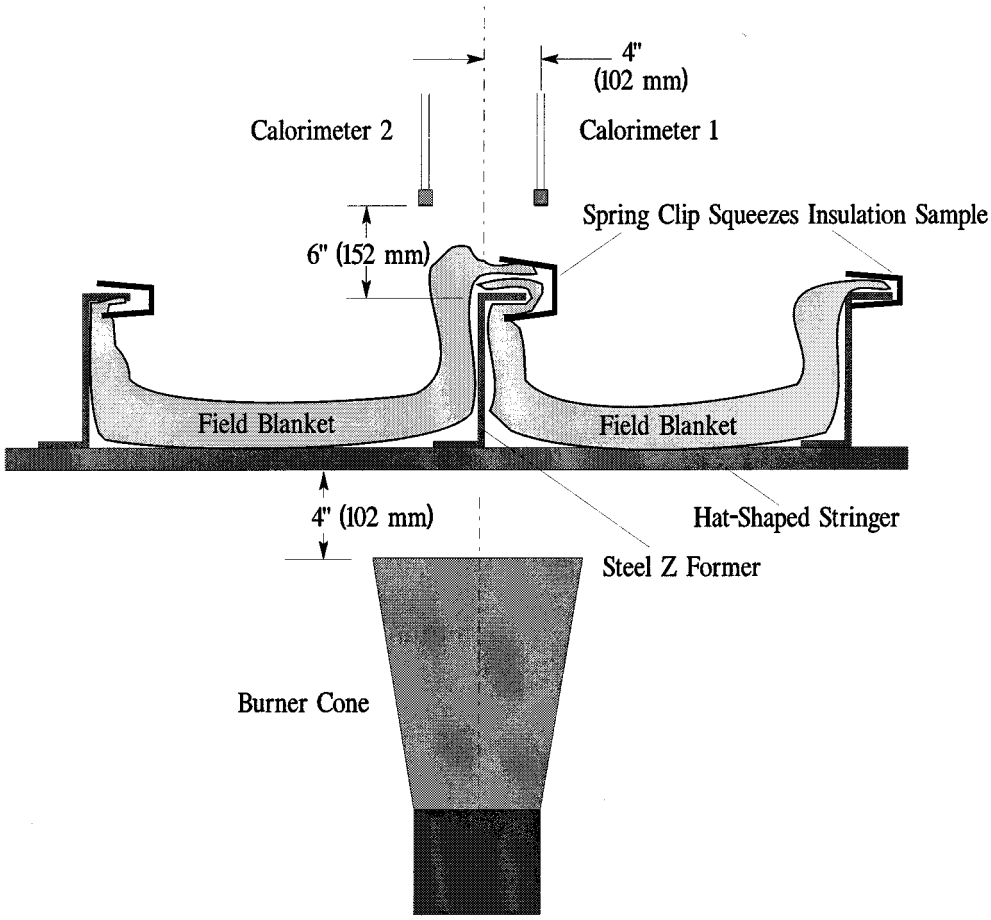

Figure 7--Test Specimen Installation On Test Frame

Note: For blanket materials that cannot be installed in accordance with figure 7 above, the blankets must be installed in a manner approved by the FAA.

(v) *Conditioning.* The specimens shall be conditioned at 70° ±5°F (21° ±2°C) and 55% +/-10% relative humidity for a minimum of 24 hours prior to testing.

(d) *Preparation of apparatus.* (1) Level and center the frame assembly to ensure alignment of the calorimeter and/or thermocouple rake with the burner cone.

(2) Turn on the ventilation hood for the test chamber. Do not turn on the burner blower. Measure the airflow of the test chamber using a vane anemometer or equivalent measuring device. The vertical air velocity just behind the top of the upper insulation blanket test specimen shall be 100 ±50 ft/min. The horizontal air velocity at this point shall be less than 50 ft/min.

(3) If a calibrated flow meter is not available, measure the fuel flow rate using a graduated cylinder of appropriate size. Turn on the burner motor/fuel pump, after insuring that the igniter system is turned off. Collect the fuel via a plastic or rubber tube into the graduated cylinder for a 2-minute period. Determine the flow rate in gallons per hour. The fuel flow rate shall be 6.0 ±0.2 gallons per hour.

(e) *Calibration.* (1) Secure the calibration rig to the test specimen frame. Position the burner so that it is centered in front of the calibration rig, and the vertical plane of the burner cone exit is at a distance of 4 ±0.125 inches (102 ±3 mm) from the calorimeter face. Ensure that the horizontal centerline of the burner cone is offset 1 inch below the horizontal centerline of the calorimeter (figure 8). Without disturbing the burner position, slide the thermocouple rake portion of the calibration rig in front of the burner, such that the middle thermocouple (number 4 of 7) is centered on the burner cone. Ensure that the horizontal centerline of the burner cone is also offset 1 inch below the horizontal centerline of the thermocouple tips.[3] If individual calibration rigs are used, swing the burner to each position to ensure proper alignment between the cone and the calorimeter and thermocouple rake.

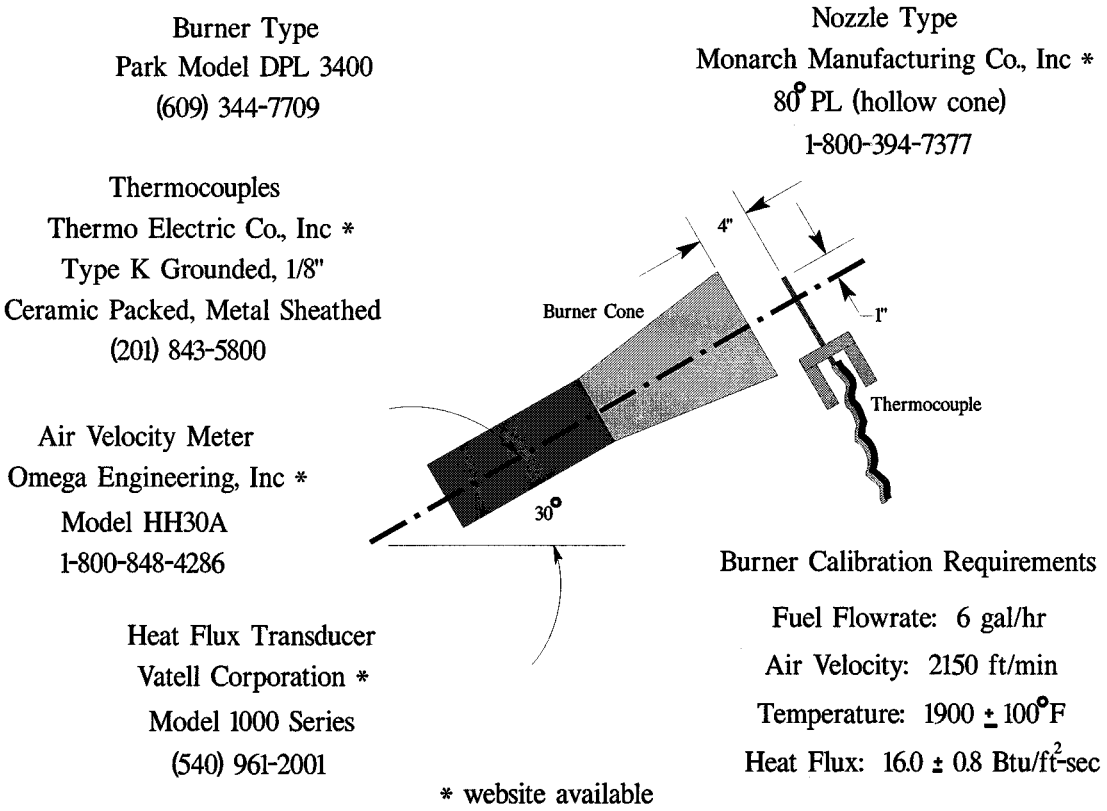

Figure 8--Burner Information and Calibration Settings

[3] The calibration rig must incorporate ''detents'' that ensure proper centering of both the calorimeter and the thermocouple rake with respect to the burner cone, so that rapid positioning of these devices can be achieved during the calibration procedure.

(2) Position the air velocity meter in the adapter, making certain that no gaps exist where air could leak around the air velocity measuring device. Turn on the blower/motor while ensuring that the fuel solenoid and igniters are off. Adjust the air intake velocity to a level of 2150 ft/min, then turn off blower/motor.

(3) Rotate the burner from the test position to the warm-up position. Prior to lighting the burner, ensure that the calorimeter face is clean of soot deposits, and there is water running through the calorimeter. Examine and clean the burner cone of any evidence of buildup of products of combustion, soot, etc. Soot buildup inside the burner cone may affect the flame characteristics and cause calibration difficulties. Since the burner cone may distort with time, dimensions should be checked periodically.

(4) While the burner is still rotated out of the test position, turn on the blower/motor, igniters, and fuel flow, and light the burner. Allow it to warm up for a period of 2 minutes. Move the burner into the test position and allow 1 minute for calorimeter stabilization, then record the heat flux once every second for a period of 30 seconds. Turn off burner, rotate out of position, and allow to cool. Calculate the average heat flux over this 30-second duration. The average heat flux should be 16.0 +/−0.8 Btu/ft^2 sec.

(5) Position the thermocouple rake in front of the burner. After checking for proper alignment, rotate the burner to the warm-up position, turn on the blower/motor, igniters and fuel flow, and light the burner. Allow it to warm up for a period of 2 minutes. Move the burner into the test position and allow 1 minute for thermocouple stabilization, then record the temperature of each of the 7 thermocouples once every second for a period of 30 seconds. Turn off burner, rotate out of position, and allow to cool. Calculate the average temperature of each thermocouple over this 30-second period and record. The average temperature of each of the 7 thermocouples should be 1900°F +/−100°F.

(6) If either the heat flux or the temperatures are not within the specified range, adjust the burner intake air velocity and repeat the procedures of paragraphs (4) and (5) above to obtain the proper values. Ensure that the inlet air velocity is within the range of 2150 ft/min +/−50 ft/min.

(7) Calibrate prior to each test until consistency has been demonstrated. After consistency has been confirmed, several tests may be conducted with calibration conducted before and after a series of tests.

(f) *Test procedure.* (1) Secure the two insulation blanket test specimens to the test frame. The insulation blankets should be attached to the test rig center vertical former using four spring clamps positioned as shown in figure 7 (according to the criteria of paragraph (c)(4) or (c)(4)(i) of this part of this appendix).

(2) Ensure that the vertical plane of the burner cone is at a distance of 4 +/−0.125 inch from the outer surface of the horizontal stringers of the test specimen frame, and that the burner and test frame are both situated at a 30° angle with respect to vertical.

(3) When ready to begin the test, direct the burner away from the test position to the warm-up position so that the flame will not impinge on the specimens. Turn on and light the burner and allow it to stabilize for 2 minutes.

(4) To begin the test, rotate the burner into the test position and simultaneously start the timing device.

(5) Expose the test specimens to the burner flame for 4 minutes and then turn off the burner. Immediately rotate the burner out of the test position.

(6) Determine (where applicable) the burnthrough time, or the point at which the heat flux exceeds 2.0 Btu/ft^2-sec.

(g) *Report.* (1) Identify and describe the specimen being tested.

(2) Report the number of insulation blanket specimens tested.

(3) Report the burnthrough time (if any), and the maximum heat flux/temperature on the back face of the insulation blanket test specimen, and the time at which the maximum occurred.

(h) *Requirements.* (1) Neither of the two insulation blanket test specimens shall allow fire/flame penetration in less than 240 seconds

(2) Neither of the two insulation blanket test specimens shall allow more than 2.0 Btu/ft^2-sec on the cold side of the insulation specimens at a point 12 inches from the face of the test rig.

PART 91—GENERAL OPERATING AND FLIGHT RULES

6–8. The authority citation for part 91 continues to read as follows:

Authority: 49 U.S.C. 106(g), 40103, 40113, 40120, 44101, 44111, 44701, 44709, 44711, 44712, 44715, 44716, 44717, 44722, 46306, 46315, 46316, 46502, 46504, 46506–46507, 47122, 47508, 47528–47531.

9. Amend § 91.613 by redesignating the existing text as paragraph (a), and adding paragraph (b) to read as follows:

§ 91.613 Materials for compartment interiors.

* * * * *

(b) *Thermal/acoustic insulation materials.* For transport category airplanes type certificated after January 1, 1958:

(1) For airplanes manufactured before [2 years after the effective date of the final rule], when thermal/acoustic insulation materials are installed as replacements after [2 years after the effective date of the final rule], those materials must meet the flame propagation requirements of § 25.856 of this chapter, effective [insert final rule effective date].

(2) For airplanes manufactured after [2 years after the effective date of the final rule], thermal/acoustic insulation materials must meet the flame propagation requirements of § 25.856 of this chapter, effective [insert final rule effective date].

PART 121—OPERATING REQUIREMENTS: DOMESTIC, FLAG, AND SUPPLEMENTAL OPERATIONS

10. The authority citation for part 121 continues to read as follows:

Authority: 49 U.S.C. 106(g), 40113, 40119, 44101, 44701–44702, 44705, 44709–44711, 44713, 44716–44717, 44722, 44901, 44903–44904, 44912, 46105.

11. Amend § 121.312 by adding paragraph (e) to read as follows:

§ 121.312 Materials for compartment interiors.

* * * * *

(e) *Thermal/acoustic insulation materials.* For transport category airplanes type certificated after January 1, 1958:

(1) For airplanes manufactured before [2 years after the effective date of the final rule], when thermal/acoustic insulation materials are installed as replacements after [2 years after the effective date of the final rule], those materials must meet the flame propagation requirements of § 25.856 of this chapter, effective [insert final rule effective date].

(2) For airplanes manufactured after [2 years after the effective date of the final rule], thermal/acoustic insulation materials must meet the flame propagation requirements of § 25.856 of this chapter, effective [insert final rule effective date].

(3) For airplanes manufactured after [4 years after the effective date of the final rule], thermal/acoustic insulation materials must meet the flame penetration resistance requirements of § 25.856 of this chapter, effective [insert final rule effective date].

PART 125—CERTIFICATION AND OPERATIONS: AIRPLANES HAVING A SEATING CAPACITY OF 20 OR MORE PASSENGERS OR A MAXIMUM PAYLOAD CAPACITY OF 6,000 POUNDS OR MORE

12. The authority citation for part 125 continues to read as follows:

Authority: : 49 U.S.C. 106(g), 40113, 44701–44702, 44705, 44710–44711, 44713, 44716–44717, 44722.

13. Amend § 125.113 by adding paragraph (c) to read as follows:

§ 125.113 Cabin interiors.

* * * * *

(c) *Thermal/acoustic insulation materials.* For transport category airplanes type certificated after January 1, 1958:

(1) For airplanes manufactured before [2 years after the effective date of the final rule], when thermal/acoustic

insulation materials are installed as replacements after [2 years after the effective date of the final rule], those materials must meet the flame propagation requirements of § 25.856 of this chapter, effective [insert final rule effective date].

(2) For airplanes manufactured after [2 years after the effective date of the final rule], thermal/acoustic insulation materials must meet the flame propagation requirements of § 25.856 of this chapter, effective [insert final rule effective date].

PART 135—OPERATING REQUIREMENTS: COMMUTER AND ON-DEMAND OPERATIONS AND RULES GOVERNING PERSONS ON BOARD SUCH AIRCRAFT

14. The authority citation for part 135 continues to read as follows:

Authority: 49 U.S.C. 106(g), 40113, 44701–44702, 44705, 44709, 44711–44713, 44715–44717, 44722.

15. Amend § 135.170 by adding paragraph (c) to read as follows:

§ 135.170 Materials for compartment interiors.

* * * * *

(c) *Thermal/acoustic insulation materials.* For transport category airplanes type certificated after January 1, 1958:

(1) For airplanes manufactured before [2 years after the effective date of the final rule], when thermal/acoustic insulation materials are installed as replacements after [2 years after the effective date of the final rule], those materials must meet the flame propagation requirements of § 25.856 of this chapter, effective [insert final rule effective date].

(2) For airplanes manufactured after [2 years after the effective date of the final rule], thermal/acoustic insulation materials must meet the flame propagation requirements of § 25.856 of this chapter, effective [insert final rule effective date].

Issued in Washington, DC, on September 8, 2000.

Elizabeth Erickson,

Director, Aircraft Certification Service.

[FR Doc. 00–23550 Filed 9–19–00; 8:45 am]

BILLING CODE 4910–13–U