AUTHENTICATED
U.S. GOVERNMENT
INFORMATION
GPO

Federal Register

9–20–00 Wednesday
Vol. 65 No. 183 Sept. 20, 2000
Pages 56773–57080

The **FEDERAL REGISTER** is published daily, Monday through Friday, except official holidays, by the Office of the Federal Register, National Archives and Records Administration, Washington, DC 20408, under the Federal Register Act (44 U.S.C. Ch. 15) and the regulations of the Administrative Committee of the Federal Register (1 CFR Ch. I). The Superintendent of Documents, U.S. Government Printing Office, Washington, DC 20402 is the exclusive distributor of the official edition.

The **Federal Register** provides a uniform system for making available to the public regulations and legal notices issued by Federal agencies. These include Presidential proclamations and Executive Orders, Federal agency documents having general applicability and legal effect, documents required to be published by act of Congress, and other Federal agency documents of public interest.

Documents are on file for public inspection in the Office of the Federal Register the day before they are published, unless the issuing agency requests earlier filing. For a list of documents currently on file for public inspection, see http://www.nara.gov/fedreg.

The seal of the National Archives and Records Administration authenticates the Federal Register as the official serial publication established under the Federal Register Act. Under 44 U.S.C. 1507, the contents of the **Federal Register** shall be judicially noticed.

The **Federal Register** is published in paper and on 24x microfiche. It is also available online at no charge as one of the databases on GPO Access, a service of the U.S. Government Printing Office.

The online edition of the **Federal Register** is issued under the authority of the Administrative Committee of the Federal Register as the official legal equivalent of the paper and microfiche editions (44 U.S.C. 4101 and 1 CFR 5.10). It is updated by 6 a.m. each day the **Federal Register** is published and it includes both text and graphics from Volume 59, Number 1 (January 2, 1994) forward.

GPO Access users can choose to retrieve online **Federal Register** documents as TEXT (ASCII text, graphics omitted), PDF (Adobe Portable Document Format, including full text and all graphics), or SUMMARY (abbreviated text) files. Users should carefully check retrieved material to ensure that documents were properly downloaded.

On the World Wide Web, connect to the **Federal Register** at http://www.access.gpo.gov/nara. Those without World Wide Web access can also connect with a local WAIS client, by Telnet to swais.access.gpo.gov, or by dialing (202) 512-1661 with a computer and modem. When using Telnet or modem, type swais, then log in as guest with no password.

For more information about GPO Access, contact the GPO Access User Support Team by E-mail at gpoaccess@gpo.gov; by fax at (202) 512–1262; or call (202) 512–1530 or 1–888–293–6498 (toll free) between 7 a.m. and 5 p.m. Eastern time, Monday–Friday, except Federal holidays.

The annual subscription price for the **Federal Register** paper edition is $638, or $697 for a combined **Federal Register,** Federal Register Index and List of CFR Sections Affected (LSA) subscription; the microfiche edition of the **Federal Register** including the Federal Register Index and LSA is $253. Six month subscriptions are available for one-half the annual rate. The charge for individual copies in paper form is $9.00 for each issue, or $9.00 for each group of pages as actually bound; or $2.00 for each issue in microfiche form. All prices include regular domestic postage and handling. International customers please add 25% for foreign handling. Remit check or money order, made payable to the Superintendent of Documents, or charge to your GPO Deposit Account, VISA, MasterCard or Discover. Mail to: New Orders, Superintendent of Documents, P.O. Box 371954, Pittsburgh, PA 15250–7954.

There are no restrictions on the republication of material appearing in the **Federal Register.**

How To Cite This Publication: Use the volume number and the page number. Example: 65 FR 12345.

SUBSCRIPTIONS AND COPIES

PUBLIC	
Subscriptions:	
Paper or fiche	**202–512–1800**
Assistance with public subscriptions	**512–1806**
General online information	**202–512–1530; 1–888–293–6498**
Single copies/back copies:	
Paper or fiche	**512–1800**
Assistance with public single copies	**512–1803**
FEDERAL AGENCIES	
Subscriptions:	
Paper or fiche	**523–5243**
Assistance with Federal agency subscriptions	**523–5243**

Printed on recycled paper.

Contents

Federal Register

Vol. 65, No. 183

Wednesday, September 20, 2000

Agriculture Department
See Animal and Plant Health Inspection Service
See Farm Service Agency
See Federal Crop Insurance Corporation
See Forest Service

Animal and Plant Health Inspection Service
RULES
Exportation and importation of animals and animal products:
Canine and equine semen importation, 56775–56779
Hog cholera; disease status change—East Anglia, 56774–56775
PROPOSED RULES
Interstate transportation of animals and animal products (quarantine):
Equine viral arteritis regulatory program for horses, 56807–56809
Plant-related quarantine, foreign:
Artificially dwarfed plants in growing media from China, 56803–56806
NOTICES
Environmental statements; availability, etc.:
Salmonella typhimurium vaccine, live culture, for use in poultry; field testing, 56863–56864

Antitrust Division
NOTICES
Competitive impact statements and proposed consent judgments:
SBC Communications, Inc., et al., 56926–56939

Army Department
NOTICES
Meetings:
Science Board, 56874

Centers for Disease Control and Prevention
NOTICES
Meetings:
Clinical Laboratory Improvement Advisory Committee; correction, 56913–56914

Coast Guard
RULES
Drawbridge operations:
Virginia, 56792
PROPOSED RULES
Ports and waterways safety:
Lower Mississippi River; Vessel Traffic Service Meeting, 56843–56844

Commerce Department
See Economic Analysis Bureau
See Economic Development Administration
See International Trade Administration
See National Institute of Standards and Technology
See National Oceanic and Atmospheric Administration
See Patent and Trademark Office
NOTICES
Agency information collection activities:
Submission for OMB review; comment request, 56865–56866

Consumer Product Safety Commission
NOTICES
Settlement agreements:
BCBG Max Azria, 56870–56872
Galoob Toys, Inc., 56872–56873

Copyright Office, Library of Congress
NOTICES
Satellite royalty funds; 1996-1998 funds; controversy ascertainment, 56941–56942

Corporation for National and Community Service
NOTICES
Meetings; Sunshine Act, 56873–56874

Customs Service
RULES
Financial and accounting procedures:
Endorsement of checks deposited by agency, 56790–56791
Vessels in foreign and domestic trades:
Vessel equipment temporarily landed for repair, 56788–56790

Defense Department
See Army Department
PROPOSED RULES
Acquisition regulations:
Overseas use of purchase card in contingency, humanitarian, or peacekeeping operations, 56858–56859

Economic Analysis Bureau
NOTICES
Agency information collection activities:
Proposed collection; comment request, 56866–56868

Economic Development Administration
NOTICES
Grants and cooperative agreements; availability, etc.:
Norton Sound, AK; economic development assistance, 57063–57065

Education Department
NOTICES
Agency information collection activities:
Proposed collection; comment request, 56874–56875

Employment and Training Administration
NOTICES
Adjustment assistance:
Freightliner LLC et al., 56939–56940
Warner's Distribution et al., 56940–56941
NAFTA transitional adjustment assistance:
Lear Corp., 56941

Energy Department
See Federal Energy Regulatory Commission
NOTICES
Natural gas exportation and importation:
Engage Energy US, L.P., et al., 56875
Presidential permit applications:
Tucson Electric Power Co., 56875–56877

Environmental Protection Agency
RULES
Air pollutants, hazardous; national emission standards:
Hazardous waste combustors; Hazardous Waste Combustion NESHAP Toolkit; availability, 56798–56799
Air quality implementation plans; approval and promulgation; various States:
Alabama, 56797–56798
Tennessee, 56794–56797
PROPOSED RULES
Air quality implementation plans:
Preparation, adoption, and submittal—
Motor vehicle inspection/maintenance program requirements; onboard diagnostic check, 56844–56856
Air quality implementation plans; approval and promulgation; various States:
Alabama, 56856–56857
Tennessee, 56856
NOTICES
Pesticide, food, and feed additive petitions:
3M, 56895–56901
Valent U.S.A. Corp., 56901–56908
Pesticide registration, cancellation, etc.:
Aventis Environmental Science USA et al., 56886–56894
Vinclozolin, 56894–56895

Executive Office of the President
See Management and Budget Office
See Presidential Documents

Farm Service Agency
NOTICES
Agency information collection activities:
Proposed collection; comment request, 56864

Federal Aviation Administration
RULES
Airworthiness directives:
Airbus, 56785–56788
Boeing, 56783–56785
Bombardier, 56780–56783
Airworthiness standards:
Special conditions—
Morrow Aircraft Corp. Model MB-300 airplane, 56779–56780
Class D airspace, 56788
PROPOSED RULES
Airworthiness directives:
Airbus, 56814–56817
Empresa Brasileira de Aeronautica, S.A., 56811–56814
Eurocopter Deutschland GMBH, 56817–56819
Pratt & Whitney, 56819–56821
Special conditions—
Sino Swearingen Model SJ30-2 airplane, 56809–56811
Airworthiness standards, etc.:
Transport category airplanes—
Thermal/acoustic insulation materials; flammability standards, 56991–57021
NOTICES
Exemption petitions; summary and disposition, 56978
Meetings:
Air Traffic Procedures Advisory Committee, 56978–56979
Passenger facility charges; applications, etc.:
Fort Dodge Regional Airport, IA, 56979
Greater Baton Rouge Airport District, LA, et al., 56979–56981
Reports and guidance documents; availability, etc.:
Flight standards policy documents; availability on Internet web site; comment request, 56981
Runway safety areas; comment request, 56981–56983

Federal Communications Commission
RULES
Radio stations; table of assignments:
Louisiana and Texas, 56800–56801
Texas, 56800
Various States, 56799–56800
Television broadcasting:
Video programming; video description for individuals with visual disabilities; implementation
Correction, 56801
PROPOSED RULES
Radio stations; table of assignments:
Arizona, 56857
Georgia, 56858
North Dakota, 56858
Texas, 56857
NOTICES
Rulemaking proceedings; petitions filed, granted, denied, etc., 56908

Federal Crop Insurance Corporation
RULES
Crop insurance regulations:
Rice crop, 56773–56774

Federal Election Commission
NOTICES
Meetings; Sunshine Act, 56908

Federal Energy Regulatory Commission
NOTICES
Electric rate and corporate regulation filings:
Public Service Co. of New Mexico et al., 56879–56882
Southwestern Power Administration et al., 56882–56883
Environmental statements; notice of intent:
Cross Bay Pipeline Co., L.L.C., et al., 56883–56884
Hydroelectric applications, 56884–56886
Applications, hearings, determinations, etc.:
Colorado Interstate Gas Co., 56877–56878
Hamilton, Ohio, 56878
Northern Natural Gas Co., 56878–56879

Federal Maritime Commission
NOTICES
Agreements filed, etc., 56909
Ocean tranportation intermediary licenses:
Quest Logistics, Inc., et al., 56909
Ocean transportation intermediary licenses:
Chippeys Enterprises, Inc., et al., 56909–56910
Florida International Forwarders, Inc., 56910

Federal Railroad Administration
NOTICES
Agency information collection activities:
Reporting and recordkeeping requirements, 56983–56984

Federal Reserve System
NOTICES
Agency information collection activities:
Proposed collection; comment request, 56910–56913
Banks and bank holding companies:
Formations, acquisitions, and mergers, 56913
Meetings:
Sunshine Act, 56913

Federal Transit Administration
NOTICES
Grants and cooperative agreements; availability, etc.:
Joint Partnership Rail Grade Crossing Safety Project, 56985–56987

Fish and Wildlife Service
NOTICES
Reports and guidance documents; availability, etc.:
Endangered Species Act; controlled propagation of species; policy statement, 56916–56922

Food and Drug Administration
PROPOSED RULES
Food for human consumption:
Food labeling—
Foods processed with alternative nonthermal technologies; use of term ''fresh'', 56835–56836
NOTICES
Meetings:
Blood donor history questionnaire streamlining; workshop, 56914
New vaccines evaluation; safety data; workshop, 56914–56915

Forest Service
NOTICES
Environmental statements; notice of intent:
Tongass National Forest, AK, 56864–56865

Health and Human Services Department
See Centers for Disease Control and Prevention
See Food and Drug Administration

Housing and Urban Development Department
NOTICES
Agency information collection activities:
Submission for OMB review; comment request, 56915–56916

Interior Department
See Fish and Wildlife Service
See Land Management Bureau
See National Park Service

Internal Revenue Service
PROPOSED RULES
Income taxes:
Partnerships; treatment of controlled foreign corporation's distributive share of partnership income; guidance under subpart F, 56836–56840

International Trade Administration
NOTICES
Antidumping and countervailing duties:
Administrative review request, 56868–56869
Applications, hearings, determinations, etc.:
National Institute of Standards and Technology, 56869

Justice Department
See Antitrust Division
See Justice Programs Office
See Prisons Bureau
NOTICES
Pollution control; consent judgments:
Cantrell et al., 56924–56925
Phoenix, AZ, 56925
Shaffer, Burton, et al., 56925
Warehouse 81 L.P. et al., 56926

Justice Programs Office
NOTICES
Grants and cooperative agreements; availability, etc.:
Victim compensation program, 57067–57076

Labor Department
See Employment and Training Administration

Land Management Bureau
NOTICES
Realty actions; sales, leases, etc.:
New Mexico, 56922–56923

Library of Congress
See Copyright Office, Library of Congress

Management and Budget Office
NOTICES
Balanced Budget and Emergency Deficit Control Reaffirmation Act (Gramm-Rudman-Hollings):
Sequestration update report; transmittal to President and Congress, 56966

National Aeronautics and Space Administration
PROPOSED RULES
Acquisition regulations:
Priorities and allocations system, 56859–56860
NOTICES
Inventions, Government-owned; availability for licensing, 56942

National Institute of Standards and Technology
NOTICES
Agency information collection activities:
Submission for OMB review; comment request, 56869–56870

National Oceanic and Atmospheric Administration
RULES
Fishery conservation and management:
Caribbean, Gulf, and South Atlantic fisheries—
South Atlantic snapper-grouper, 56801
West Coast States and Western Pacific fisheries—
Pacific whiting, 56801–56802
PROPOSED RULES
Fishery conservation and management:
Alaska; fisheries of Exclusive Economic Zone—
Prohibited species donation program, 56860–56862
NOTICES
Reports and guidance documents; availability, etc.:
Endangered Species Act; controlled propagation of species; policy statement, 56916–56922

National Park Service
NOTICES
Environmental statements; availability, etc.:
Gettysburg National Military Park, PA, 56923
Meetings:
Going-to-the-Sun Road Advisory Committee, 56923–56924
Native American human remains and associated funerary objects:
Museum of Natural History, NY—
Inventory from King County, WA, 56924

National Science Foundation
NOTICES
Meetings; Sunshine Act, 56942

Nuclear Regulatory Commission
NOTICES
Meetings:
Reactor Safeguards Advisory Committee, 56945–56946
Operating licenses, amendments; no significant hazards considerations; biweekly notices, 56946–56964
Reports and guidance documents; availability, etc.:
Staff meetings open to public; policy statement, 56964–56966
Applications, hearings, determinations, etc.:
Union Electric Co., 56943–56945

Office of Management and Budget
See Management and Budget Office

Patent and Trademark Office
RULES
Patent cases:
Interference practice; simplification of requirements, 56792–56794
Patent applications, pending; eighteen-month publication; implementation, 57023–57061

Personnel Management Office
NOTICES
Excepted service:
Schedules A, B, and C; positions placed or revoked—Update, 56966–56967

Presidential Documents
EXECUTIVE ORDERS
Committees; establishment, renewal, termination, etc.:
Medicine Policy, White House Commission on Complementary and Alternative; membership (EO 13167), 57077–57079

Prisons Bureau
PROPOSED RULES
Inmate control, custody, care, etc.:
Drug abuse treatment programs; participation requirements, 56840–56843

Public Health Service
See Centers for Disease Control and Prevention
See Food and Drug Administration

Research and Special Programs Administration
NOTICES
Hazardous materials:
Applications; exemptions, renewals, etc., 56984–56988

Securities and Exchange Commission
NOTICES
Investment Company Act of 1940:
Exemption applications—
PFL Life Insurance Co. et al., 56967–56971
Meetings:
Sunshine Act, 56971–56972
Self-regulatory organizations; proposed rule changes:
Chicago Board Options Exchange, Inc., 56972–56974
New York Stock Exchange, Inc., 56974–56976

State Department
NOTICES
Meetings:
Shipping Coordinating Committee, 56976

Surface Transportation Board
NOTICES
Railroad operation, acquisition, construction, etc.:
Bessemer & Lake Erie Railway Co., 56988
Wisconsin Chicago Link, Ltd., 56988–56989

Tennessee Valley Authority
PROPOSED RULES
Tennessee River system; construction approval and regulation of structures:
Residential related use on TVA-controlled residential access shoreline and TVA flowage easement shoreline, 56821–56835

Transportation Department
See Coast Guard
See Federal Aviation Administration
See Federal Railroad Administration
See Federal Transit Administration
See Research and Special Programs Administration
See Surface Transportation Board
NOTICES
Docket Management System; comment request, 56976–56978

Treasury Department
See Customs Service
See Internal Revenue Service
RULES
Internal Revnue Service Privacy Act; implementation, 56791–56792

Separate Parts In This Issue

Part II
Department of Transportation, Federal Aviation Administration, 56991–57021

Part III
Department of Commerce, Patent and Trademark Office, 57023–57061

Part IV
Department of Commerce, Economic Development Administration, 57063–57065

Part V
Department of Justice, Justice Programs Office, 57067–57076

Part VI
The President, 57077–57079

Reader Aids
Consult the Reader Aids section at the end of this issue for phone numbers, online resources, finding aids, reminders, and notice of recently enacted public laws.

CFR PARTS AFFECTED IN THIS ISSUE

A cumulative list of the parts affected this month can be found in the Reader Aids section at the end of this issue.

3 CFR

Executive Orders:

13147 (Amended by EO 13167).....57079
13167.....57079

7 CFR

457.....56773

Proposed Rules:

319.....56803

9 CFR

94.....56774
98.....56775

Proposed Rules:

75.....56807

14 CFR

23.....56779
39 (3 documents) 56780, 56783, 56785
71.....56788

Proposed Rules:

23.....56809
25.....56992
39 (4 documents) 56811, 56814, 56817, 56819
91.....56992
121.....56992
125.....56992
135.....56992

18 CFR

Proposed Rules:

1304.....56821

19 CFR

4.....56788
24.....56790
178.....56788

21 CFR

Proposed Rules:

101.....56835

26 CFR

Proposed Rules:

1.....56836

28 CFR

Proposed Rules:

545.....56840
550.....56840

31 CFR

1.....56792

33 CFR

117.....56793

Proposed Rules:

26.....56843
161.....56843
165.....56843

37 CFR

Ch. I.....56791
1 (2 documents) 56791, 57024
5.....57024

40 CFR

52 (2 documents) 56794, 56797
60.....56798
63.....56798
260.....56798
261.....56798
264.....56798
265.....56798
266.....56798
270.....56798
271.....56798

Proposed Rules:

51.....56844
52 (2 documents) 56856
85.....56844

47 CFR

73 (3 documents) 56799, 56800
79.....56801

Proposed Rules:

73 (4 documents) 56857, 56858

48 CFR

Proposed Rules:

213.....56858
1811.....56859

50 CFR

622.....56801
660.....56801

Proposed Rules:

679.....56860

Rules and Regulations

Federal Register

Vol. 65, No. 183

Wednesday, September 20, 2000

This section of the FEDERAL REGISTER contains regulatory documents having general applicability and legal effect, most of which are keyed to and codified in the Code of Federal Regulations, which is published under 50 titles pursuant to 44 U.S.C. 1510.

The Code of Federal Regulations is sold by the Superintendent of Documents. Prices of new books are listed in the first FEDERAL REGISTER issue of each week.

DEPARTMENT OF AGRICULTURE

Federal Crop Insurance Corporation

7 CFR Part 457

Common Crop Insurance Regulations; Rice Crop Insurance Provisions

AGENCY: Federal Crop Insurance Corporation, USDA.

ACTION: Interim rule.

SUMMARY: The Federal Crop Insurance Corporation (FCIC) amends the Rice Crop Insurance Provisions to provide coverage for losses resulting from failure of irrigation water supplies due to drought and intrusion of saline water as mandated by section 508(a)(8) of the Federal Crop Insurance Act (Act).

EFFECTIVE DATE: This rule is effective September 19, 2000. Written comments and opinions on this rule will be accepted until the close of business November 20, 2000, and will be considered when the rule is to be made final.

ADDRESSES: Interested persons are invited to submit written comments to the Director, Product Development Division, Federal Crop Insurance Corporation, United States Department of Agriculture, 6501 Beacon Drive, Stop 0812, Room 421, Kansas City, MO 64133–4676. Comments titled ''Rice Legislation'' may be sent via the Internet to DirectorPDD@rm.fcic.usda.gov. A copy of each response will be available for public inspection and copying from 7:00 a.m. to 4:30 p.m., CDT, Monday through Friday, except holidays, at the above address.

FOR FURTHER INFORMATION CONTACT: For further information contact Linda Williams, Insurance Management Specialist, Research and Development, Product Development Division, Federal Crop Insurance Corporation, at the Kansas City, MO, address listed above, telephone (816) 926–7730.

SUPPLEMENTARY INFORMATION:

Executive Order 12866

This rule has been determined to be exempt for the purposes of Executive Order 12866 and, therefore, has not been reviewed by the Office of Management and Budget (OMB).

Paperwork Reduction Act of 1995

Under the provisions of the Paperwork Reduction Act of 1995 (44 U.S.C. chapter 35), the collections of information for this rule have been previously approved by OMB under control number 0563–0053 through April 30, 2001. The amendments set forth in this rule do not revise the content or alter the frequency of reporting for any of the forms or information collections cleared under the above-referenced docket.

Unfunded Mandates Reform Act of 1995

Title II of the Unfunded Mandates Reform Act of 1995 (UMRA) establishes requirements for Federal agencies to assess the effects of their regulatory actions on State, local, and tribal governments and the private sector. This rule contains no Federal mandates (under the regulatory provisions of title II of UMRA) for State, local, and tribal governments or the private sector. Therefore, this rule is not subject to the requirements of sections 202 and 205 of UMRA.

Executive Order 13132

The provisions contained in this rule will not have a substantial direct effect on States, the relationship between the national government and the States, or on the distribution of power and responsibilities among the various levels of government. Therefore, consultation with the States is not required.

Regulatory Flexibility Act

This regulation will not have a significant economic impact on a substantial number of small entities. The regulation does not require any more action on the part of the small entities than is required on the part of large entities. The amount of work required by the insurance companies will not increase significantly as a result of this rule. Therefore, this action is determined to be exempt from the provisions of the Regulatory Flexibility Act (5 U.S.C. 605), and no Regulatory Flexibility Analysis was prepared.

Federal Assistance Program

This program is listed in the Catalog of Federal Domestic Assistance under No. 10.450.

Executive Order 12372

This program is not subject to the provisions of Executive Order 12372 which require intergovernmental consultation with State and local officials. See the Notice related to 7 CFR part 3015, subpart V, published at 48 FR 29115, June 24, 1983.

Executive Order 12988

This rule has been reviewed in accordance with Executive Order 12988 on civil justice reform. The provisions of this rule will not have a retroactive effect. The provisions of this rule will preempt State and local laws to the extent such State and local laws are inconsistent herewith. The administrative appeal provisions published at 7 CFR part 11 must be exhausted before any action for judicial review of any determination made by FCIC may be brought.

Environmental Evaluation

This action is not expected to have a significant economic impact on the quality of the human environment, health, and safety. Therefore, neither an Environmental Assessment nor an Environmental Impact Statement is needed.

Background

This interim rule implements the changes to the rice crop insurance policy mandated by section 508(a)(8) of the Act. Section 508(a)(8) of the Act requires the provisions to be implemented for the 2001 and subsequent crop years. Since the changes to the policy made by this rule are required by statute, and the changes must be made by the November 30, 2000, contract change date to be fully implemented for the 2001 crop year, it is contrary to the public interest to publish this rule for notice and comment prior to making the rule effective. However, comments are solicited for 60 days after the date of publication in the **Federal Register** and will be considered by FCIC before this rule is made final.

FCIC amends the Common Crop Insurance Regulations (7 CFR part 457) by amending 7 CFR 457.141, Rice Crop Insurance Provisions effective for the 2001 and succeeding crop years. The principal changes for insuring rice are:

1. Section 9(a)—Clarify that failure of the irrigation water supply is an insured cause of loss, if during the insurance period an insured cause of loss, drought or intrusion of saline water causes the failure. This will expand coverage for failure of the irrigation water supply.

2. Section 9(b)—Clarify that any loss of production due to the application of saline water is not an insured cause of loss, except when intrusion of saline water occurs due to an insured peril.

List of Subjects in 7 CFR Part 457

Crop insurance, Rice.

Interim Rule

Accordingly, as set forth in the preamble, the Federal Crop Insurance Corporation amends 7 CFR part 457 as follows:

PART 457—COMMON CROP INSURANCE REGULATIONS

1. The authority citation for 7 CFR part 457 continues to read as follows:

Authority: 7 U.S.C. 1506(l), 1506(p).

2. Amend 457.141 as follows:

a. Revise the introductory text;

b. Revise section 9(a)(8) of the crop provisions; and

c. Revise section 9(b) of the crop provisions.

§ 457.141 Rice crop insurance provisions.

The Rice Crop Insurance Provisions for the 2001 and succeeding crop years are as follows:

* * * * *

9. Causes of Loss.

(a) * * *

(8) Failure of the irrigation water supply if caused by an insured cause of loss specified in sections 9(a)(1) through (7), drought, or the intrusion of saline water.

(b) In addition to the causes of loss not insured against in section 12 of the Basic Provisions, we will not insure against any loss of production due to the application of saline water, except as specified in section 9(a)(8) of these crop provisions.

* * * * *

Signed in Washington, D.C., on September 14, 2000.

Kenneth D. Ackerman,

Manager, Federal Crop Insurance Corporation.

[FR Doc. 00–24087 Filed 9–19–00; 8:45 am]

BILLING CODE 3410–08–P

DEPARTMENT OF AGRICULTURE

Animal and Plant Health Inspection Service

9 CFR Part 94

[Docket No. 00–080–1]

Change in Disease Status of East Anglia Because of Hog Cholera

AGENCY: Animal and Plant Health Inspection Service, USDA.

ACTION: Interim rule and request for comments.

SUMMARY: We are amending the regulations governing the importation of swine and pork and pork products by removing East Anglia, a region of England that includes the counties of Essex, Norfolk, and Suffolk, from the list of regions considered to be free from hog cholera. We are taking this action based on reports we have received from Great Britain's Ministry of Agriculture, Fisheries and Food that an outbreak of hog cholera has occurred in East Anglia. As a result of this action, there will be additional restrictions on the importation of pork and pork products into the United States from East Anglia, and the importation of swine from East Anglia will be prohibited.

DATES: This interim rule was effective August 4, 2000. We invite you to comment on this docket. We will consider all comments that we receive by November 20, 2000.

ADDRESSES: Please send your comment and three copies to: Docket No. 00–080–1, Regulatory Analysis and Development, PPD, APHIS, Suite 3C03, 4700 River Road, Unit 118, Riverdale, MD 20737–1238.

Please state that your comment refers to Docket No. 00–080–1.

You may read any comments that we receive on this docket in our reading room. The reading room is located in room 1141 of the USDA South Building, 14th Street and Independence Avenue, SW., Washington, DC. Normal reading room hours are 8 a.m. to 4:30 p.m., Monday through Friday, except holidays. To be sure someone is there to help you, please call (202) 690–2817 before coming.

APHIS documents published in the **Federal Register**, and related information, including the names of organizations and individuals who have commented on APHIS dockets, are available on the Internet at http://www.aphis.usda.gov/ppd/rad/webrepor.html.

FOR FURTHER INFORMATION CONTACT: Dr. Gary Colgrove, Chief Staff Veterinarian, National Center for Import and Export, VS, APHIS, 4700 River Road Unit 38, Riverdale, MD 20737–1231, (301) 734–3276.

SUPPLEMENTARY INFORMATION:

Background

The regulations in 9 CFR part 94 (referred to below as the regulations) govern the importation into the United States of specified animals and animal products in order to prevent the introduction of various animal diseases, including rinderpest, foot-and-mouth disease, African swine fever, hog cholera, and swine vesicular disease. These are dangerous and destructive communicable diseases of ruminants and swine. Section 94.9 of the regulations restricts the importation into the United States of pork and pork products from regions where hog cholera is known to exist. Section 94.10 of the regulations, with certain exceptions, prohibits the importation of swine that originate in or are shipped from or transit any region in which hog cholera is known to exist. Sections 94.9(a) and 94.10(a) of the regulations provide that hog cholera exists in all regions of the world except for certain regions listed in those sections.

Prior to the effective date of this interim rule, Great Britain (England, Scotland, Wales, and Isle of Man) was included in the lists in §§ 94.9(a) and 94.10(a) of regions in which hog cholera is not known to exist. On August 8, 2000, Great Britain's Ministry of Agriculture, Fisheries and Food (MAFF) reported that an outbreak of hog cholera had occurred in East Anglia, a region of England that includes the counties of Essex, Norfolk, and Suffolk. After reviewing the reports submitted by MAFF, the Animal and Plant Health Inspection Service has determined that it is necessary to remove East Anglia from the list of regions considered to be free of hog cholera.

Therefore, we are amending §§ 94.9(a) and 94.10(a) by removing East Anglia from the list of regions in which hog cholera is not known to exist. We are making this amendment effective retroactively to August 4, 2000, because that is the day that hog cholera was initially suspected in East Anglia. On August 8, 2000, MAFF confirmed East Anglia's outbreak of hog cholera. As a result of this action, the importation of swine from East Anglia is prohibited, and pork and pork products from East Anglia will not be eligible for entry into the United States unless the pork or pork products are cooked or cured and dried in accordance with the regulations. Other regions of England, as well as Scotland, Wales, and Isle of

Man, will remain on the list of regions considered to be free of hog cholera in §§ 94.9(a) and 94.10(a).

Although we are removing East Anglia from the list of regions in which hog cholera is not known to exist, we recognize that MAFF immediately responded to the detection of the disease by imposing restrictions on the movement of pork, pork products, and swine from the affected area and initiating measures to eradicate the disease. At the time of publication of this interim rule, it appears that the outbreak is well controlled. Because of MAFF's efforts to ensure that hog cholera does not spread beyond East Anglia, we intend to reassess the situation, in accordance with the standards of the Office International des Epizooties. In that reassessment process, we will consider all comments received on this interim rule. This future assessment will determine whether it is necessary to continue to prohibit the importation of swine from East Anglia and restrict the importation of pork and pork products from East Anglia or whether we can restore East Anglia to the list of regions in which hog cholera is not known to exist.

Emergency Action

The Administrator of the Animal and Plant Health Inspection Service has determined that an emergency exists that warrants publication of this interim rule without prior opportunity for public comment. Immediate action is necessary to prevent the introduction of hog cholera into the United States.

Because prior notice and other public procedures with respect to this action are impracticable and contrary to the public interest under these conditions, we find good cause under 5 U.S.C. 553 to make this action effective on August 4, 2000. We will consider comments that are received within 60 days of publication of this rule in the **Federal Register**. After the comment period closes, we will publish another document in the **Federal Register**. It will include a discussion of any comments we receive and any amendments we are making to the rule as a result of the comments.

Executive Order 12866 and Regulatory Flexibility Act

This rule has been reviewed under Executive Order 12866. For this action, the Office of Management and Budget has waived its review process required by Executive Order 12866.

This action amends the regulations by removing East Anglia from the list of regions that are considered to be free of hog cholera. We are taking this action based on reports we have received from MAFF, which confirm that an outbreak of hog cholera has occurred in East Anglia.

This emergency situation makes timely compliance with section 604 of the Regulatory Flexibility Act (5 U.S.C. 601 *et seq.*) impracticable. We are currently assessing the potential economic effects of this action on small entities. Based on that assessment, we will either certify that the rule would not have a significant economic impact on a substantial number of small entities or publish a final regulatory flexibility analysis.

Executive Order 12988

This rule has been reviewed under Executive Order 12988, Civil Justice Reform. This rule: (1) Preempts all State and local laws and regulations that are inconsistent with this rule; (2) has retroactive effect to August 4, 2000; and (3) does not require administrative proceedings before parties may file suit in court challenging this rule.

Paperwork Reduction Act

This rule contains no new information collection or recordkeeping requirements under the Paperwork Reduction Act of 1995 (44 U.S.C. 3501 *et seq.*).

List of Subjects in 9 CFR Part 94

Animal diseases, Imports, Livestock, Meat and meat products, Milk, Poultry and poultry products, Reporting and recordkeeping requirements.

Accordingly, we are amending 9 CFR part 94 as follows:

PART 94—RINDERPEST, FOOT-AND-MOUTH DISEASE, FOWL PEST (FOWL PLAGUE), EXOTIC NEWCASTLE DISEASE, AFRICAN SWINE FEVER, HOG CHOLERA, AND BOVINE SPONGIFORM ENCEPHALOPATHY: PROHIBITED AND RESTRICTED IMPORTATIONS

1. The authority citation for part 94 continues to read as follows:

Authority: 7 U.S.C. 147a, 150ee, 161, 162, and 450; 19 U.S.C. 1306; 21 U.S.C. 111, 114a, 134a, 134b, 134c, 134f, 136, and 136a; 31 U.S.C. 9701; 42 U.S.C. 4331 and 4332; 7 CFR 2.22, 2.80, and 371.2(d).

2. In § 94.9, paragraph (a) is revised to read as follows:

§ 94.9 Pork and pork products from regions where hog cholera exists.

(a) Hog cholera is known to exist in all regions of the world except Australia; Canada; Denmark; England, except for East Anglia (Essex, Norfolk, and Suffolk counties); Fiji; Finland; Iceland; Isle of Man; New Zealand; Northern Ireland; Norway; the Republic of Ireland; Scotland; Sweden; Trust Territory of the Pacific Islands; and Wales.[10]

* * * * *

3. In § 94.10, paragraph (a), the first sentence is revised to read as follows:

§ 94.10 Swine from regions where hog cholera exists.

(a) Hog cholera is known to exist in all regions of the world except Australia; Canada; Denmark; England, except for East Anglia (Essex, Norfolk, and Suffolk counties); Fiji; Finland; Iceland; Isle of Man; New Zealand; Northern Ireland; Norway; the Republic of Ireland; Scotland; Sweden; Trust Territory of the Pacific Islands; and Wales. * * *

* * * * *

Done in Washington, DC, this 14th day of September 2000.

Bobby R. Acord,

Acting Administrator, Animal and Plant Health Inspection Service.

[FR Doc. 00–24136 Filed 9–19–00; 8:45 am]

BILLING CODE 3410–34–U

DEPARTMENT OF AGRICULTURE

Animal and Plant Health Inspection Service

9 CFR Part 98

[Docket No. 99–023–2]

Importation of Animal Semen

AGENCY: Animal and Plant Health Inspection Service, USDA.

ACTION: Final rule.

SUMMARY: We are amending our regulations concerning the importation of animal semen by eliminating importation requirements for all canine semen from anywhere in the world and for equine semen from Canada. We believe these changes are warranted because canine semen and equine semen from Canada pose no threat of introducing diseases to U.S. livestock. This action will reduce regulatory requirements for the importation of semen while continuing to protect the health of U.S. livestock.

We are also requiring that other animal semen be imported only in shipping containers that bear the official government seal of the national veterinary service of the region of origin.

[10] See also other provisions of this part and parts 92, 95, and 96 of this chapter, and 327 of this title for other prohibitions and restrictions upon importation of swine and swine products.

This action will help prevent the importation of animal semen that does not meet the requirements of our regulations.

EFFECTIVE DATE: October 20, 2000.

FOR FURTHER INFORMATION CONTACT: Dr. Roger Perkins, Senior Staff Veterinarian, National Center for Import and Export (NCIE), VS, APHIS, 4700 River Road Unit 39, Riverdale, MD 20737–1231; (301) 734–8419.

SUPPLEMENTARY INFORMATION:

Background

The regulations in 9 CFR part 98 govern the importation of animal germ plasm to prevent the introduction of contagious diseases of livestock and poultry into the United States. Subparts A and B of part 98 apply to animal embryos, and subpart C (referred to below as ''the regulations'') applies to animal semen.

We are amending the regulations by eliminating importation requirements for all canine semen from anywhere in the world and for equine semen from Canada. We believe these changes are warranted because canine semen and equine semen from Canada pose no threat of introducing diseases to U.S. livestock. We are also removing references to mules from the regulations because mule semen is not collected. In addition, we are requiring that other animal semen be imported only in shipping containers that bear the official government seal of the national veterinary service of the region of origin. This action will help prevent the importation of animal semen that does not meet the requirements of our regulations.

We published a proposal for this action in the **Federal Register** on January 26, 2000 (65 FR 4173–4176, Docket No. 99–023–1). We solicited comments concerning our proposal for 60 days ending March 27, 2000. We received eight comments by that date. They were from representatives of industry and a university. Five commenters supported the proposed rule in its entirety. The remaining commenters expressed concerns about certain provisions of the proposed rule. Their specific concerns are discussed below.

Comment: All imported equine semen, even equine semen from Canada, should be required to be screened for specific pathogens, such as contagious equine metritis (CEM), equine viral arteritis (EVA), vesicular stomatitis, West Nile virus, equine infectious anemia (EIA), equine influenza, and equine herpes virus. Screenings should not be limited to those equine diseases that are exotic to the United States or for which there is a national eradication program. Therefore, you should not eliminate importation requirements for equine semen from Canada.

Response: Canada's disease status for the diseases listed by this commenter is the same as the disease status of the United States. Therefore, in accordance with the standards established by the Office International des Epizooties and international trade agreements entered into by the United States, we have no basis to require testing of equine semen from Canada for these diseases or to impose other regulatory requirements on equine semen from Canada based on Canada's disease status.

Further, it is impractical to require intensive disease screenings for equine semen. The time involved in testing would preclude the importation of fresh semen and may even affect the viability of imported frozen semen.

Therefore, we are making no changes to the proposal in response to this comment.

Comment: If you are considering amending the regulations to require testing of semen from stallions that are serologically positive for EVA, why would you propose to remove requirements for equine semen from Canada?

Response: At this time, our regulations do not require domestic or imported semen to be tested for EVA. If, in the future, we determine that such a requirement is necessary, we will amend the regulations to reflect that change. Until that time, we have no basis for imposing stricter requirements on equine semen from Canada than on domestic equine semen. Therefore, we are making no changes to the proposal in response to this comment.

Comment: There is evidence that EIA can be spread through semen. We require live animals from Canada to be EIA negative. We should also require testing of equine semen from Canada to determine if the semen is negative.

Response: Two research papers, one published in 1942 and the other in 1984, reference the possibility that EIA can be spread through semen. However, we do not know of any more current research that confirms or supports the theory that EIA can be transmitted through semen. Consequently, we believe that, even if EIA were present in equine semen imported into the United States from Canada, there is no sound scientific basis to conclude that disease transmission would occur through insemination of that semen. Therefore, we are making no changes to the proposal in response to this comment.

Comment: Potential pathogens in canine semen pose a threat to *Canidae* spp. (for example, *Brucella canis*). Therefore, you should at least require health certification, including a simple set of serologic tests or documentation of sero-negative status prior to vaccination, for canine semen.

Response: The regulations in 9 CFR part 98 govern the importation of animal germ plasm to prevent the introduction of contagious diseases of livestock and poultry into the United States. We do not consider *Canidae* spp., such as foxes, jackals, coyotes, wolves, and dogs, to be livestock under the regulations, and there is no evidence that diseases that could be transmitted by canine semen would present a threat to livestock. Therefore, we are making no changes to the proposal in response to this comment.

Comment: Your analysis under Executive Order 12866 and the Regulatory Flexibility Act underestimates the effect that this proposal could have on U.S. entities. The analysis should consider the potential for the international movement of both canine and equine semen. In the early years of bovine artificial insemination, the world underestimated the effect this technology would have on the cattle industry and trade of bovine semen. Especially when researchers find an easy way to cryopreserve stallion semen to maintain a high level of fertility, we will see a significant increase in the use of frozen semen, and the dynamics of your ''apparently small volume of imports'' will change dramatically.

Response: It is extremely difficult, at best, to project how a regulatory action, or a new technology, will affect international trade. Therefore, we use current trade and production information to make our best estimates about the potential effect of rules. We believe that the economic analysis in this document is a fair estimate of the potential effect this rule will have on U.S. importers and others. Therefore, we are making no changes to the proposal in response to this comment.

Therefore, for the reasons given in the proposed rule and in this document, we are adopting the proposed rule as a final rule, without change.

Executive Order 12866 and Regulatory Flexibility Act

This rule has been reviewed under Executive Order 12866. The rule has been determined to be not significant for the purposes of Executive Order 12866 and, therefore, has not been reviewed by the Office of Management and Budget.

We are amending the regulations by eliminating importation requirements for canine semen from anywhere in the world and for equine semen from Canada, and by removing references to mules. This means that canine semen from anywhere in the world, and equine semen from Canada, will no longer need an import permit, declaration, health certificate, or other document and will not have to meet any other requirements in our regulations when imported into the United States. This action will have no affect on the importation of mule semen because mule semen is not collected and, therefore, not imported. We believe these changes are warranted because canine semen from anywhere in the world, as well as equine semen from Canada, pose no threat of introducing diseases to U.S. livestock. This action will reduce requirements while continuing to protect the health of U.S. livestock. This action will benefit U.S. importers of canine semen from anywhere in the world and equine semen from Canada because it will ease the importation of these products. As noted above, importers of canine semen from anywhere in the world and equine semen from Canada will no longer need to obtain an import permit, health certificate, or declaration before importing the semen into the United States. This will slightly reduce the time and money required for the importation of these products. The principal monetary savings to affected importers will be the $39.50 per load fee currently charged for a permit to import animal semen into the United States (see table of user fees in 9 CFR part 130.8).

APHIS will also benefit from this action because we will no longer have to use our resources to issue import permits or perform other duties required by the regulations for the importation of canine semen from anywhere in the world or equine semen from Canada.

However, we believe that the benefits of this action will be small because of the apparently small volume of U.S. imports of canine semen from anywhere in the world and equine semen from Canada. Specific data on the volume of these imports is not available, which leads us to believe that the volume of those imports is relatively small. As a point of reference, the value of U.S. imports of bovine semen from all countries of the world in 1998 amounted to approximately $14 million. That means those imports comprised only 0.1 percent of the value of U.S. imports of all products of animal origin from all countries of the world in 1998. Because the volumes of U.S. imports of canine semen and equine semen were not reported as separate categories for 1998, we expect the value of those imports each amounted to less than $14 million.

We are also requiring that other animal semen from anywhere in the world be imported only in shipping containers that bear an official government seal. The seal number of each shipping container will have to appear on the health certificate that accompanies the shipment. This action will help prevent the importation of animal semen that does not meet the requirements of our regulations.

Because it is standard industry practice to seal containers of animal semen for importation into the United States with official seals, we do not believe this change will have a significant impact on exporters, importers, or APHIS. For veterinarians in the country of export, writing the seal numbers of the shipping containers on the health certificate accompanying the shipment and, for APHIS, checking to see that the seal numbers match will require a small amount of time, but we do not believe that will have a significant impact on affected persons.

The Regulatory Flexibility Act requires us to consider the economic effects of our rules on small entities. The businesses in the United States that will be affected by the proposed rule change are importers of canine semen from anywhere in the world and equine semen from Canada. The number of these businesses is not known, but there are probably few because of the apparently small volume of U.S. imports of canine and equine semen. Therefore, this action will likely not have an economic effect on a substantial number of U.S. businesses, large or small.

The businesses that will be affected are likely small in size, at least by the standards of the Small Business Administration (SBA). This assumption is based on SBA's information for providers of services involving animal semen, or similar services, in the United States. In 1993, there were 1,671 U.S. firms engaged in buying and/or marketing certain farm products, including animal semen. Of those 1,671 firms, 97 percent had fewer than 100 employees, the SBA's small entity threshold for such firms. In addition, in 1993, there were 6,804 U.S. firms engaged in performing certain services for pets, equines, and other animal specialities, including artificial insemination and breeding services. The per firm sales average of those 6,804 firms was $115,290, a figure well below the SBA's small entity threshold for such firms of $5 million. However, as previously discussed, this rule is not expected to have a significant economic effect on affected businesses.

Under these circumstances, the Administrator of the Animal and Plant Health Inspection Service has determined that this action will not have a significant economic impact on a substantial number of small entities.

Executive Order 12988

This final rule has been reviewed under Executive Order 12988, Civil Justice Reform. This rule: (1) Preempts all State and local laws and regulations that are inconsistent with this rule; (2) has no retroactive effect; and (3) does not require administrative proceedings before parties may file suit in court challenging this rule.

Paperwork Reduction Act

This rule contains no new information collection or recordkeeping requirements under the Paperwork Reduction Act of 1995 (44 U.S.C. 3501 et seq.).

List of Subjects in 9 CFR Part 98

Animal diseases, Imports.

Accordingly, we are amending 9 CFR part 98 as follows:

PART 98—IMPORTATION OF CERTAIN ANIMAL EMBRYOS AND ANIMAL SEMEN

1. The authority citation for part 98 is revised to read as follows:

Authority: 7 U.S.C. 1622; 19 U.S.C. 1306; 21 U.S.C. 103–105, 111, 134a, 134b, 134c, 134d, 134f, 136, and 136a; 31 U.S.C. 9701; 7 CFR 2.22, 2.80, and 371.4.

2. In § 98.30, the definition of *Animals* is revised to read as follows:

§ 98.30 Definitions.

* * * * *

Animals. Cattle, sheep, goats, other ruminants, swine, horses, asses, zebras, and poultry.

* * * * *

3. Section 98.35 is amended as follows:

a. By redesignating paragraphs (d)(7) and (d)(8) as paragraphs (d)(8) and (d)(9), and by adding a new paragraph (d)(7).

b. By adding a new paragraph (f).

§ 98.35 Declaration, health certificate, and other documents for animal semen.

* * * * *

(d) * * *

(7) The seal number on the shipping container;

* * * * *

(f) All shipping containers carrying animal semen for importation into the United States must be sealed with an

official seal of the national veterinary service of the region of origin. The health certificate must show the seal number on the shipping container. The semen must remain in the sealed container until arrival in the United States and, at the U.S. port of entry, an inspector determines that either:

(1) The seal numbers on the health certificate and shipping container match; or

(2) The seal numbers on the health certificate and shipping container do not match, but an APHIS representative at the port of entry is satisfied that the shipping container contains the semen described on the health certificate, import permit, declaration, and any other accompanying documents.

* * * * *

4. Immediately before § 98.36, the heading ''Canada'' is removed.

5. Section 98.36 is revised to read as follows:

§ 98.36 Animal semen from Canada.

(a) *General importation requirements for animal semen from Canada.*

If the product is . . .	Then . . .
(1) Equine semen	There are no importation requirements under this part.
(2) Sheep or goat semen	The importer or his agent, in accordance with §§ 98.34 and 98.35 of this part, must present: (i) An import permit; (ii) Two copies of a declaration; and (iii) A health certificate.
(3) Animal semen other than equine, sheep, or goat semen.	See paragraph (b) of this section.

(b) *Importation requirements for animal semen other than equine, sheep, or goat semen from Canada.*

If the product is offered for entry at a . . .	And . . .	Or . . .	Then . . .
(1) Canadian land border port listed in § 98.33(b) of this part.	The donor animal was born in Canada or the United States and has never been in a region other than Canada or the United States.	The donor animal was legally imported into Canada, released to move freely in Canada, and has been released in Canada for no less than 60 days.	The importer or his agent, in accordance with § 98.35 of this part, must present: (i) Two copies of a declaration; and (ii) A health certificate.
(2) Canadian land border port listed in § 98.33(b) of this part.	The donor animal does not meet the special conditions listed above in paragraph (b)(1) of this table.		The importer or his agent, in accordance with §§ 98.34 and 98.35 of this part, must present: (i) An import permit; (ii) Two copies of a declaration; and (iii) A health certificate.
(3) Port not listed in § 98.33(b) of this part.			The importer or his agent, in accordance with §§ 98.34 and 98.35 of this part, must present: (i) An import permit; (ii) Two copies of a declaration; and (iii) A health certificate.

Done in Washington, DC, this 14th day of September 2000.

Bobby R. Acord,

Acting Administrator, Animal and Plant Health Inspection Service.

[FR Doc. 00–24134 Filed 9–19–00; 8:45 am]

BILLING CODE 3410–34–U

DEPARTMENT OF TRANSPORTATION

Federal Aviation Administration

14 CFR Part 23

[Docket No. CE161; Special Conditions No. 23–104–SC]

Special Conditions: Installation of Full Authority Digital Engine Control (FADEC) System on Morrow Aircraft Corporation Model MB–300 Airplane

AGENCY: Federal Aviation Administration (FAA), DOT.

ACTION: Final special conditions.

SUMMARY: These special conditions are issued for the Morrow Aircraft Corporation Model MB–300, which will use a FADEC System. This airplane will have a novel or unusual design feature associated with the installation of an engine that uses an electronic engine control system in place of the engine's mechanical system. The applicable airworthiness regulations do not contain adequate or appropriate safety standards for this design feature. These special conditions contain the additional safety standards that the Administrator considers necessary to establish a level of safety equivalent to that established by the existing airworthiness standards.

EFFECTIVE DATE: October 20, 2000.

FOR FURTHER INFORMATION CONTACT: Randy Griffith, Aerospace Engineer, Federal Aviation Administration, Aircraft Certification Service, Small Airplane Directorate, ACE–111, 901 Locust, Room 301, Kansas City, Missouri, 816–329–4126, fax 816–329–4090.

SUPPLEMENTARY INFORMATION:

Background

On March 5, 1999, Morrow Aircraft Corporation applied for a type certificate for the Model MB–300 airplane. The Model MB–300 is a small, normal category airplane. The airplane is powered by two reciprocating engines, each equipped with an electronic engine control system with full authority capability in place of the hydromechanical control system.

Type Certification Basis

Under the provisions of 14 CFR 21.17, Morrow Aircraft Corporation must show that the Model MB-300 meets the applicable provisions of 14 CFR part 23, as amended by Amendments 23–1 through 23–53 thereto.

If the Administrator finds that the applicable airworthiness regulations (i.e., 14 CFR part 23) do not contain adequate or appropriate safety standards for the Model MB–300 because of a novel or unusual design feature, special conditions are prescribed under the provisions of § 21.16.

In addition to the applicable airworthiness regulations and special conditions, the Model MB-300 must comply with the fuel vent and exhaust emission requirements of 14 CFR part 34 and the noise certification requirements of 14 CFR part 36, and the FAA must issue a finding of regulatory adequacy pursuant to § 611 of Public Law 92–574, the ''Noise Control Act of 1972.''

Special conditions, as appropriate, are issued in accordance with § 11.49 after public notice, as required by §§ 11.28 and 11.29(b), and become part of the type certification basis in accordance with § 21.17(a)(2).

Special conditions are initially applicable to the model for which they are issued. Should the type certificate for that model be amended later to include any other model that incorporates the same novel or unusual design feature, the special conditions would also apply to the other model under the provisions of § 21.101(a)(1).

Novel or Unusual Design Features

The Morrow Model MB–300 will incorporate the following novel or unusual design features:

The Morrow Model MB–300 airplane will use two engines that each include an electronic control system with full engine authority capability.

Many advanced electronic systems are prone to either upsets or damage, or both, at energy levels lower than analog systems. The increasing use of high power radio frequency emitters mandates requirements for improved high intensity radiated fields (HIRF) protection for electrical and electronic equipment. Since the electronic engine control system used on the Morrow Model MB–300 will perform critical functions, provisions for protection from the effects of HIRF fields should be considered and, if necessary, incorporated into the airplane design data. The FAA policy contained in Notice 8110.71, dated April 2, 1998, establishes the HIRF energy levels that airplanes will be exposed to in service. The guidelines set forth in this Notice are the result of an Aircraft Certification Service review of existing policy on HIRF, in light of the ongoing work of the ARAC Electromagnetic Effects Harmonization Working Group (EEHWG). The EEHWG adopted a set of HIRF environment levels in November 1997 that were agreed upon by the FAA, JAA, and industry participants. As a result, the HIRF environments in this notice reflect the environment levels recommended by this working group. This Notice states that a full authority digital engine control is an example of a system that should address the HIRF environments.

Even though the control system will be certificated as part of the engine, the installation of an engine with an electronic control system requires evaluation due to the possible effects on or by other airplane systems (e.g., radio interference with other airplane electronic systems, shared engine and airplane power sources). The regulatory requirements in 14 CFR part 23 for evaluating the installation of complex systems, including electronic systems, are contained in § 23.1309. However, when § 23.1309 was developed, the use of electronic control systems for engines was not envisioned; therefore, the § 23.1309 requirements were not applicable to systems certificated as part of the engine (reference § 23.1309(f)(1)). Also, electronic control systems often require inputs from airplane data and power sources and outputs to other airplane systems (e.g., automated cockpit powerplant controls such as mixture setting). Although the parts of the system that are not certificated with the engine could be evaluated using the criteria of § 23.1309, the integral nature of systems such as these makes it unfeasible to evaluate the airplane portion of the system without including the engine portion of the system. However, § 23.1309(f)(1) again prevents complete evaluation of the installed airplane system since evaluation of the engine system's effects is not required.

Therefore, special conditions for the Morrow Model MB–300 provide HIRF protection and evaluate the installation of the electronic engine control system for compliance with the requirements of § 23.1309(a) through (e) at Amendment 23–53.

Discussion of Comments

A notice of proposed special conditions No. 23–00–02–SC for the Morrow Aircraft Corporation Model MB–300 airplane was published on May 15, 2000 (65 FR 30936). No comments were received, and the special conditions are adopted as proposed.

Applicability

As discussed above, these special conditions are applicable to the Morrow Model MB–300. Should Morrow Aircraft Corporation apply at a later date for a change to the type certificate to include another model incorporating the same novel or unusual design feature, the special conditions would apply to that model as well under the provisions of § 21.101(a)(1).

Conclusion

This action affects only certain novel or unusual design features on one model, the Morrow Model MB–300 airplane. It is not a rule of general applicability, and it affects only the applicant who applied to the FAA for approval of these features on the airplane.

List of Subjects in 14 CFR Part 23

Aircraft, Aviation safety, Signs and symbols.

Citation

The authority citation for these special conditions is as follows:

Authority: 49 U.S.C. 106(g), 40113 and 44701; 14 CFR 21.16 and 21.17; and 14 CFR 11.28 and 49.

The Special Conditions

Accordingly, under the authority delegated to me by the Administrator, the following special conditions are issued as part of the type certification basis for Morrow Model MB–300 airplane.

1. *High Intensity Radiated Fields (HIRF) Protection.* In showing compliance with 14 CFR part 21 and the airworthiness requirements of 14 CFR part 23, protection against hazards caused by exposure to HIRF fields for the full authority digital engine control system, which performs critical functions, must be considered. To prevent this occurrence, the electronic engine control system must be designed and installed to ensure that the operation and operational capabilities of this critical system are not adversely affected when the airplane is exposed to high energy radio fields.

At this time, the FAA and other airworthiness authorities are unable to precisely define or control the HIRF energy level to which the airplane will be exposed in service; therefore, the FAA hereby defines two acceptable interim methods for complying with the requirement for protection of systems that perform critical functions.

(1) The applicant may demonstrate that the operation and operational capability of the installed electrical and electronic systems that perform critical functions are not adversely affected when the aircraft is exposed to the external HIRF threat environment defined in the following table:

Frequency	Field strength (volts per meter)	
	Peak	Average
10 kHz–100 kHz	50	50
100 kHz–500 kHz	50	50
500 kHz–2 MHz	50	50
2 MHz–30 MHz	100	100
30 MHz–70 MHz	50	50
70 MHz–100 MHz	50	50
100 MHz–200 MHz	100	100
200 MHz–400 MHz	100	100
400 MHz–700 MHz	700	50
700 MHz–1 GHz	700	100
1 GHz–2 GHz	2000	200
2 GHz–4 GHz	3000	200
4 GHz–6 GHz	3000	200
6 GHz–8 GHz	1000	200
8 GHz–12 GHz	3000	300
12 GHz–18 GHz	2000	200
18 GHz–40 GHz	600	200

The field strengths are expressed in terms of peak root-mean-square (rms) values.

or,

(2) The applicant may demonstrate by a system test and analysis that the electrical and electronic systems that perform critical functions can withstand a minimum threat of 100 volts per meter peak electrical strength, without the benefit of airplane structural shielding, in the frequency range of 10 KHz to 18 GHz. When using this test to show compliance with the HIRF requirements, no credit is given for signal attenuation due to installation. Data used for engine certification may be used, when appropriate, for airplane certification.

2. *Electronic Engine Control System.* The installation items that affect the electronic engine control system must comply with the requirements of § 23.1309(a) through (e) including applicable amendments through Amendment 23–53. Data used for engine certification may be used, when appropriate, for airplane certification.

Issued in Kansas City, Missouri on September 6, 2000.

Michael Gallagher,

Manager, Small Airplane Directorate, Aircraft Certification Service.

[FR Doc. 00–24141 Filed 9–19–00; 8:45 am]

BILLING CODE 4910–13–P

DEPARTMENT OF TRANSPORTATION

Federal Aviation Administration

14 CFR Part 39

[Docket No. 99–NM–26–AD; Amendment 39–11902; AD 2000–19–01]

RIN 2120–AA64

Airworthiness Directives; Bombardier Model CL–600–1A11 (CL–600) and CL–600–2A12 (CL–601) Series Airplanes

AGENCY: Federal Aviation Administration, DOT.

ACTION: Final rule.

SUMMARY: This amendment adopts a new airworthiness directive (AD), applicable to Bombardier Model CL–600–1A11 (CL–600) and CL–600–2A12 (CL–601) series airplanes, that requires modification of the main landing gear (MLG) brake units and inboard MLG wheels; and a revision to the Airplane Flight Manual (AFM) to include the increased cooling times for the modified brakes. This amendment allows, for certain cases, removal of the inboard and/or outboard wheel discs by installation of a placard to limit airplane operation on the ground and a revision to the AFM to include information for operating the airplane with the wheel discs removed. Additionally, this amendment provides for an acceptable method of compliance that involves installation of a new revision to the AFM. This amendment is prompted by issuance of mandatory continuing airworthiness information by a foreign civil airworthiness authority. The actions specified by this AD are intended to prevent water freezing on the brake while the airplane is in flight due to water, slush, or snow from the runway entering into the brake assemblies during takeoff, and consequently, a tire burst during landing of the airplane.

DATES: Effective October 25, 2000.

The incorporation by reference of certain publications listed in the regulations is approved by the Director of the Federal Register as of October 25, 2000.

ADDRESSES: The service information referenced in this AD may be obtained from Bombardier, Inc., Canadair, Aerospace Group, P.O. Box 6087, Station Centre-ville, Montreal, Quebec H3C 3G9, Canada. This information may be examined at the FAA, Transport Airplane Directorate, 1601 Lind Avenue, SW., Renton, Washington; or at the FAA, New York Aircraft Certification Office, 10 Fifth Street, Third Floor, Valley Stream, New York;

or at the Office of the Federal Register, 800 North Capitol Street, NW., suite 700, Washington, DC.

FOR FURTHER INFORMATION CONTACT: James E. Delisio, Aerospace Engineer, Airframe and Propulsion Branch, ANE–171, FAA, New York Aircraft Certification Office, 10 Fifth Street, Third Floor, Valley Stream, New York 11581; telephone (516) 256–7521; fax (516) 568–2716.

SUPPLEMENTARY INFORMATION: A proposal to amend part 39 of the Federal Aviation Regulations (14 CFR part 39) to include an airworthiness directive (AD) that is applicable to certain Bombardier Model CL–600–1A11 (CL–600) and CL–600–2A12 (CL–601) series airplanes was published in the **Federal Register** on March 31, 2000 (65 FR 17208). That action proposed to require modification of the main landing gear (MLG) brake units and inboard MLG wheels; and a revision to the Airplane Flight Manual (AFM) to include the increased cooling times for the modified brakes. That action also proposed to allow, for certain cases, removal of the inboard and/or outboard wheel discs by installation of a placard to limit airplane operation on the ground and a revision to the AFM to include information for operating the airplane with the wheel discs removed.

Comments

Interested persons have been afforded an opportunity to participate in the making of this amendment. Due consideration has been given to the single comment received.

Request to Withdraw the Proposal

The commenter points out that the manufacturer has issued, and the FAA has approved, a revision of the AFM's for the applicable airplane models that contain procedures to dry out the brakes. [Bombardier Model CL–600–1A11 (CL–600) AFM Revisions A84 and 76, both dated February 7, 2000; and Model CL600–2A12 (CL–601) AFM Revisions 45, 48, 50, and 86, all dated February 7, 2000.] The AFM revision for the applicable airplane models also contains procedures calling for a minimum number of brake applications during taxi prior to take-off when operating on wet, snow covered, or slush covered surfaces. The commenter concludes that the modification of the MLG units and inboard MLG wheels specified in the proposal is no longer necessary. The FAA infers that the commenter is requesting that the NPRM be withdrawn.

The FAA does not concur that the NPRM should be withdrawn. Since an identified unsafe condition would still exist, the FAA would be obligated to proceed with another NPRM proposing that the new AFM revisions be mandated. The FAA finds that to delay this action would be inappropriate in light of the unsafe condition. However, the FAA acknowledges that the procedures described in the new AFM revisions do provide an acceptable level of safety for complying with the requirements of this AD. Therefore, the final rule has been revised to add a new paragraph (d) that provides for compliance with the requirements of this AD.

Conclusion

After careful review of the available data, including the comment noted above, the FAA has determined that air safety and the public interest require the adoption of the rule with the changes previously described. The FAA has determined that these changes will neither increase the economic burden on any operator nor increase the scope of the AD.

Cost Impact

The FAA estimates that 131 airplanes of U.S. registry will be affected by this AD.

It will take approximately 33 work hours [for Model CL–600–1A11 (CL–600) series airplanes] or 26 work hours [for Model CL–600–2A12 (CL–601) series airplanes] per airplane to accomplish the required modification, at an average labor rate of $60 per work hour. Required parts will cost approximately $2,977 per airplane. Based on these figures, the cost impact of this action required by this AD on U.S. operators is estimated to be $649,367, or $4,957 per airplane [for Model CL–600–1A11 (CL–600) series airplanes], and $594,347, or $4,537 per airplane [for Model CL–600–2A12 (CL–601) series airplanes].

It will take approximately 1 work hour per airplane to accomplish the required AFM revision, at an average labor rate of $60 per work hour. Based on these figures, the cost impact of the AFM revision required by this AD on U.S. operators is estimated to be $7,860, or $60 per airplane.

The cost impact figures discussed above are based on assumptions that no operator has yet accomplished any of the requirements of this AD action, and that no operator would accomplish those actions in the future if this AD were not adopted. The cost impact figures discussed in AD rulemaking actions represent only the time necessary to perform the specific actions actually required by the AD. These figures typically do not include incidental costs, such as the time required to gain access and close up, planning time, or time necessitated by other administrative actions.

In the event an operator chooses to install the new AFM revisions specified in paragraph (d) of this AD, it will take approximately 1 work hour per airplane to accomplish, at an average labor rate of $60 per work hour. Based on these figures, the cost impact of the AFM revision specified in paragraph (d) of this AD on U.S. operators is estimated to be $7,860, or $60 per airplane.

Regulatory Impact

The regulations adopted herein will not have a substantial direct effect on the States, on the relationship between the national Government and the States, or on the distribution of power and responsibilities among the various levels of government. Therefore, it is determined that this final rule does not have federalism implications under Executive Order 13132.

For the reasons discussed above, I certify that this action (1) is not a ''significant regulatory action'' under Executive Order 12866; (2) is not a ''significant rule'' under DOT Regulatory Policies and Procedures (44 FR 11034, February 26, 1979); and (3) will not have a significant economic impact, positive or negative, on a substantial number of small entities under the criteria of the Regulatory Flexibility Act. A final evaluation has been prepared for this action and it is contained in the Rules Docket. A copy of it may be obtained from the Rules Docket at the location provided under the caption **ADDRESSES**.

List of Subjects in 14 CFR Part 39

Air transportation, Aircraft, Aviation safety, Incorporation by reference, Safety.

Adoption of the Amendment

Accordingly, pursuant to the authority delegated to me by the Administrator, the Federal Aviation Administration amends part 39 of the Federal Aviation Regulations (14 CFR part 39) as follows:

PART 39—AIRWORTHINESS DIRECTIVES

1. The authority citation for part 39 continues to read as follows:

Authority: 49 U.S.C. 106(g), 40113, 44701.

§ 39.13 [Amended]

2. Section 39.13 is amended by adding the following new airworthiness directive:

2000–19–01 Bombardier, Inc. (Formerly Canadair): Amendment 39–11902. Docket 99-NM–26–AD.

Applicability: Model CL–600–1A11 (CL–600) series airplanes, serial numbers 1004 through 1066 inclusive and 1068 through 1085 inclusive, and Model CL–600–2A12 (CL–601) series airplanes, serial numbers 3001 through 3050 inclusive; certificated in any category.

Note 1: This AD applies to each airplane identified in the preceding applicability provision, regardless of whether it has been modified, altered, or repaired in the area subject to the requirements of this AD. For airplanes that have been modified, altered, or repaired so that the performance of the requirements of this AD is affected, the owner/operator must request approval for an alternative method of compliance in accordance with paragraph (e) of this AD. The request should include an assessment of the effect of the modification, alteration, or repair on the unsafe condition addressed by this AD; and, if the unsafe condition has not been eliminated, the request should include specific proposed actions to address it.

Compliance: Required as indicated, unless accomplished previously.

To prevent water freezing on the brake while the airplane is in flight due to water, slush, or snow from the runway entering into the brake assemblies during takeoff, and consequently, a tire burst during landing of the airplane, accomplish the following:

Modification and AFM Revision

(a) Except as required by paragraph (b) of this AD, within 300 flight cycles after the effective date of this AD, accomplish the actions required by paragraphs (a)(1) and (a)(2) of this AD in accordance with the Accomplishment Instructions of Canadair Challenger Service Bulletin 600–0369, Revision 4, dated June 27, 1984, including Attachment 1, dated December 6, 1983, and Attachment 2, dated January 11, 1984 [for Model CL–600–1A11 (CL–600) series airplanes]; or 601–0024, Revision 3, dated November 27, 1984, including Attachment 1, dated June 21, 1984, Attachment 2, dated December 6, 1983, and Attachment 3, dated January 11, 1984 [for Model CL–600–2A12 (CL–601) series airplanes]; as applicable.

(1) Modify the main landing gear (MLG) brake units and inboard MLG wheels.

Note 2: Part A of the Accomplishment Instructions of Canadair Challenger Service Bulletin 600–0369, Revision 4, dated June 27, 1984, including Attachment 1, dated December 6, 1983, and Attachment 2, dated January 11, 1984; has been accomplished on airplane serial number 1072 in production.

(2) Revise the Normal Procedures Section of the FAA-approved Airplane Flight Manual (AFM) to include the brake cooling times for the modification specified in paragraph (a)(1) of this AD. This AFM revision may be accomplished by inserting the applicable AFM revision listed in the applicable service bulletin listed in paragraph (a) of this AD. Subsequent AFM revisions may be inserted in the AFM provided that the brake cooling information is identical to the applicable AFM revision listed in the applicable service bulletin listed in paragraph (a) of this AD.

(b) Operation of the airplane from contaminated runways (i.e., wet, snow covered, or slush covered surfaces) is prohibited until the actions required by paragraph (a) or (d) of this AD are accomplished.

Optional Placard Installation and AFM Revisions

(c) For airplanes that do not operate from a wet runway where the ambient temperature is below 10 degrees Celsius: It is permissible to remove the inboard and/or outboard wheel discs upon accomplishment of the actions specified in paragraphs (c)(1) and (c)(2) of this AD, in accordance with Canadair Challenger Service Bulletin 600–0662, dated November 30, 1995 [for Model CL–600–1A11 (CL–600) series airplanes]; or 601–0467, dated November 30, 1995 [for Model CL–600–2A12 (CL–601) series airplanes]; as applicable. The placard and AFM revision required by paragraphs (c)(1) and (c)(2) of this AD may be removed upon reinstallation of the inboard and outboard wheel discs.

(1) Install a placard on the instrument panel that states the following: ''WHEEL DISCS ARE REMOVED—REFER TO AFM FOR LIMITATIONS''

(2) Revise the Limitations Section of the AFM to include information for operating the airplane with the wheel discs removed. This AFM revision may be accomplished by inserting the applicable AFM revision specified in the applicable service bulletin listed in paragraph (a) of this AD. Subsequent AFM revisions may be inserted in the AFM provided that the information for operating the airplane with the wheel discs removed is identical to the applicable AFM revision specified in the applicable service bulletin listed in paragraph (a) of this AD.

Acceptable Methods of Compliance

(d) For all airplanes: Installation of the AFM revision specified in either paragraph (d)(1) or (d)(2) of this AD, as applicable, is acceptable for compliance with the requirements of paragraphs (a) and (b) of this AD, as applicable.

(1) Bombardier Model CL–600–1A11 (CL–600) AFM Revisions A84 and 76, both dated February 7, 2000; or

(2) Bombardier Model CL600–2A12 (CL–601) AFM Revisions 45, 48, 50, and 86, all dated February 7, 2000.

Alternative Methods of Compliance

(e) An alternative method of compliance or adjustment of the compliance time that provides an acceptable level of safety may be used if approved by the Manager, New York Aircraft Certification Office (ACO), FAA. Operators shall submit their requests through an appropriate FAA Principal Maintenance Inspector, who may add comments and then send it to the Manager, New York ACO.

Note 3: Information concerning the existence of approved alternative methods of compliance with this AD, if any, may be obtained from the New York ACO.

Special Flight Permits

(f) Special flight permits may be issued in accordance with sections 21.197 and 21.199 of the Federal Aviation Regulations (14 CFR 21.197 and 21.199) to operate the airplane to a location where the requirements of this AD can be accomplished.

Incorporation by Reference

(g)(1) The actions required by paragraph (a) of this AD shall be done in accordance with Canadair Challenger Service Bulletin 601–0024, Revision 3, dated November 27, 1984, including Attachment 1, dated June 21, 1984, Attachment 2, dated December 6, 1983, and Attachment 3, dated January 11, 1984; or Canadair Challenger Service Bulletin 600–0369, Revision 4, dated June 27,1984, including Attachment 1, dated December 6, 1983, and Attachment 2, dated January 11, 1984; as applicable. Revision 3 of Canadair Challenger Service Bulletin 601–0024 contains the list of effective pages specified in Table 1 of this AD. Revision 4 of Canadair Challenger Service Bulletin 600–0369 contains the list of effective pages specified in Table 2 of this AD. Tables 1 and 2 are as follows:

TABLE 1

Page Number	Revision level shown on page	Date shown on page
1–10	3	November 27, 1984.
1–13	Attachment 1, Rev. 1.	June 21, 1984.
1, 2	Attachment 2	December 6, 1983
1, 2	Attachment 3	January 11, 1984.

TABLE 2

Page Number	Revision level shown on page	Date shown on page
1–10	4	June 27, 1984.
1, 2	Attachment 1	December 6, 1983.
1, 2	Attachment 2	January 11, 1984.

(2) This incorporation by reference was approved by the Director of the Federal Register in accordance with 5 U.S.C. 552(a) and 1 CFR part 51. Copies may be obtained from Bombardier, Inc., Canadair, Aerospace Group, P.O. Box 6087, Station Centre-ville, Montreal, Quebec H3C 3G9, Canada. Copies may be inspected at the FAA, Transport Airplane Directorate, 1601 Lind Avenue, SW., Renton, Washington; or at the FAA, New York Aircraft Certification Office, 10 Fifth Street, Third Floor, Valley Stream, New York; or at the Office of the Federal Register, 800 North Capitol Street, NW., suite 700, Washington, DC.

Note 4: The subject of this AD is addressed in Canadian airworthiness directive CF–84–04R2, dated July 24, 1998.

(h) This amendment becomes effective on October 20, 2000.

Issued in Renton, Washington, on September 8, 2000.

Donald L. Riggin,

Acting Manager, Transport Airplane Directorate, Aircraft Certification Service.

[FR Doc. 00–23579 Filed 9–19–00; 8:45 am]

BILLING CODE 4910–13–P

DEPARTMENT OF TRANSPORTATION

Federal Aviation Administration

14 CFR Part 39

[Docket No. 99–NM–69–AD; Amendment 39–11906; AD 2000–19–05]

RIN 2120–AA64

Airworthiness Directives; Boeing Model 737–100, –200, –200C, –300, –400, and –500 Series Airplanes

AGENCY: Federal Aviation Administration, DOT.

ACTION: Final rule.

SUMMARY: This amendment supersedes an existing airworthiness directive (AD); applicable to certain Boeing Model 737–100, –200, –200C, –300, –400, and –500 series airplanes; that currently requires a one-time inspection of the attachment nuts at each end attachment of the elevator tab push rods to measure run-on torque values, and corrective actions, if necessary. This amendment adds a requirement to replace all existing bolts and attachment nuts at the forward and aft end attachment of each elevator tab push rod with new bolts and self-locking castellated nuts with cotter pins. This amendment is prompted by reports of excessive high-frequency airframe vibration during flight, with consequent structural damage to the elevator tab, elevator, and stabilizer. The actions specified by this AD are intended to prevent detachment of an elevator tab push rod due to a detached nut at either end attachment of a push rod, which could result in excessive high-frequency airframe vibration during flight; consequent structural damage to the elevator tab, elevator, and horizontal stabilizer; and reduced controllability of the airplane.

DATES: Effective October 25, 2000.

The incorporation by reference of Boeing Service Letter 737–SL–27–118–D, dated December 17, 1999, as listed in the regulations, is approved by the Director of the Federal Register as of October 25, 2000.

The incorporation by reference of Boeing Alert Service Bulletin 737–27A1205, dated August 28, 1997, was approved previously by the Director of the Federal Register as of March 23, 1999 (64 FR 10935, March 8, 1999).

ADDRESSES: The service information referenced in this AD may be obtained from Boeing Commercial Airplane Group, P.O. Box 3707, Seattle, Washington 98124–2207. This information may be examined at the Federal Aviation Administration (FAA), Transport Airplane Directorate, Rules Docket, 1601 Lind Avenue, SW., Renton, Washington; or at the Office of the Federal Register, 800 North Capitol Street, NW., suite 700, Washington, DC.

FOR FURTHER INFORMATION CONTACT: Scott Fung, Aerospace Engineer, Airframe Branch, ANM–120S, FAA, Seattle Aircraft Certification Office, 1601 Lind Avenue, SW., Renton, Washington 98055–4056; telephone (425) 227–1221; fax (425) 227–1181.

SUPPLEMENTARY INFORMATION: A proposal to amend part 39 of the Federal Aviation Regulations (14 CFR part 39) by superseding AD 99–05–15, amendment 39–11063 (64 FR 10935, March 8, 1999); applicable to certain Boeing Model 737–100, –200, –200C, –300, –400, and –500 series airplanes; was published in the **Federal Register** on December 3, 1999 (64 FR 67807). The action proposed to continue to require a one-time inspection of the attachment nuts at each end attachment of the elevator tab push rods to measure run-on torque values, and corrective actions, if necessary. The action also proposed to add a requirement to replace all existing bolts and attachment nuts at the forward and aft end attachment of each elevator tab push rod with new bolts and self-locking castellated nuts with cotter pins.

Comments

Interested persons have been afforded an opportunity to participate in the making of this amendment. Due consideration has been given to the comments received.

Supportive Comment

One commenter supports the proposed rule.

Request To Extend Compliance Time in Paragraph (b)

Several commenters request that the FAA extend the proposed compliance time for the replacement of the existing bolts and attachment nuts specified in paragraph (b) of the proposal. One commenter requests that the proposed compliance time be extended from 12 months to 18 months after the effective date of this AD. The commenter indicates that an 18-month compliance time will allow the work to be incorporated into its regularly scheduled maintenance visits when sufficient time and resources are available.

A second commenter requests that the proposed compliance time be extended to within 24 months after the effective date of this AD, not to exceed 4,000 flight cycles. The commenter states that this change will enable the tab freeplay inspections and tab push rod bolt and nut replacement to be made concurrently during a regularly scheduled major maintenance check (a ''C'' check). The commenter adds that this change also will reduce the impact on fleet operations, a concern operators expressed during the lead airline reviews for Boeing Service Bulletin 737–55A1070, dated January 13, 2000. According to the commenter, 737–55A1070 specifies that tab installation inspections and tab hinge and tab trailing edge freeplay checks be made within 4,000 flight cycles or 24 months after release of the service bulletin. That service bulletin also has repeat inspections at 1,500 flight cycles or 2,000 flight hours.

A third commenter requests an extension of the proposed compliance time to 24 months after the effective date of this AD. The commenter states that the extension would allow accomplishment of the replacement during its heavy maintenance checks.

A fourth commenter requests an extension of the proposed compliance time to 4 years after the effective date of this AD. The commenter states that replacement of the hardware cannot be done in a short (overnight) maintenance visit. The commenter proposes that the compliance time be extended in order to allow the work to be accomplished during a major maintenance visit. The commenter currently is working on replacing the subject hardware per the accomplishment schedule in the proposed rule. The commenter indicates that the inspection of the bolts for current run-on torque values specified in the proposal has been accomplished on its fleet, and the attachment hardware has been replaced if its condition was beyond allowable limits. In light of this fact, the commenter notes that an extension of the compliance time for the remaining attachments should not pose a significant decrease in safety.

The FAA concurs with the commenters' requests to extend the compliance time required by paragraph (b) of the final rule. Following careful consideration of the comments, and in light of the fact that AD 99–05–15, amendment 39–11063, mandated the one-time inspection and corrective actions, the FAA has determined that it will not compromise safety to extend the compliance time for the replacement required by paragraph (b) of this AD.

Therefore, the compliance time in paragraph (b) of this final rule has been extended to within 24 months or 4,000 flight cycles after the effective date of this AD, whichever occurs first.

Request To Revise Cost Impact Information

One commenter states that the actual time required to modify an airplane (replace the existing bolts and nuts) is 12 work hours and will exceed the 4 work hours estimated in the proposed rule. The commenter adds that the modification cannot be done during an overnight maintenance visit without disrupting service, and special routing would be required.

The FAA acknowledges that the cost impact information, below, describes only the ''direct'' costs of the specific actions required by this AD. The estimate of 12 work hours submitted by the commenter includes time for gaining access and closing up. The cost analysis in AD rulemaking actions, however, typically does not include incidental costs, such as the time required to gain access and close up, planning time, or time necessitated by other administrative actions. Because incidental costs may vary significantly from operator to operator, they are almost impossible to calculate. The number of work hours necessary to accomplish the required actions, specified as 4 in the cost impact information in the proposal and restated below, represents the time necessary to perform only the actions actually required by this AD (that is, the replacement). No change to the final rule is necessary in this regard.

Later Revision of Service Letter

Two commenters state that the most current revision level of the service letter should be used in the proposed rule. The FAA agrees with the commenters statement. The FAA has reviewed and approved Boeing Service Letters 737–SL–27–118–B, dated April 14, 1999; 737–SL–27–118–C, dated May 19, 1999; and 737–SL–27–118–D, dated December 17, 1999; and finds that they are essentially similar to the service letter referenced in paragraphs (a)(2) and (b) of the proposed rule. Accordingly, Revision 'D' has replaced the reference to Revision 'A' in paragraphs (a)(2) and (b) of this AD. In addition, a new note (Note 3) has been added to this final rule to give credit for accomplishment of the actions in paragraphs (a)(2) and (b) of this AD in accordance with Revisions 'A,' 'B,' or 'C' of the service letter prior to the effective date of this AD.

Explanation of Change to Proposal

Since the issuance of the notice of proposed rulemaking (NPRM), the FAA has concluded that paragraph (c)(2) of the proposal is incorrect. That paragraph reads, ''Alternative methods of compliance (AMOC), approved previously in accordance with AD 99–05–15, amendment 39–11063, are NOT considered to be approved as alternative methods of compliance with this AD.'' The FAA has determined that the AMOC's specified are indeed approved. Therefore, paragraph (c)(2) of this final rule has been revised accordingly.

Conclusion

After careful review of the available data, including the comments noted above, the FAA has determined that air safety and the public interest require the adoption of the rule with the changes previously described. The FAA has determined that these changes will neither increase the economic burden on any operator nor increase the scope of the AD.

Cost Impact

There are approximately 2,742 airplanes of the affected design in the worldwide fleet. The FAA estimates that 1,106 airplanes of U.S. registry will be affected by this AD.

The new replacement that is required in this AD action takes approximately 4 work hours per airplane to accomplish, at an average labor rate of $60 per work hour. Required parts will cost approximately $560 per airplane. Based on these figures, the cost impact of the replacement required by this AD on U.S. operators is estimated to be $884,800, or $800 per airplane.

The cost impact figure discussed above is based on assumptions that no operator has yet accomplished any of the current or new requirements of this AD action, and that no operator would accomplish those actions in the future if this AD were not adopted.

The one-time inspection required by AD 99–05–15 was required to be accomplished within 90 days after the effective date of that AD (March 23, 1999). Since the 90-day compliance time has passed, the FAA assumes that all airplanes currently on the U.S. Register have been inspected. Therefore, there is no future cost impact of this requirement on current U.S. operators of these airplanes.

However, should an affected airplane be imported and placed on the U.S. Register in the future, it would take approximately 4 work hours per airplane to accomplish the one-time inspection, at an average labor rate of $60 per work hour. Based on these figures, the cost impact of the inspection required by this AD on U.S. operators is estimated to be $240 per airplane.

Regulatory Impact

The regulations adopted herein will not have a substantial direct effect on the States, on the relationship between the national Government and the States, or on the distribution of power and responsibilities among the various levels of government. Therefore, it is determined that this final rule does not have federalism implications under Executive Order 13132.

For the reasons discussed above, I certify that this action (1) is not a ''significant regulatory action'' under Executive Order 12866; (2) is not a ''significant rule'' under DOT Regulatory Policies and Procedures (44 FR 11034, February 26, 1979); and (3) will not have a significant economic impact, positive or negative, on a substantial number of small entities under the criteria of the Regulatory Flexibility Act. A final evaluation has been prepared for this action and it is contained in the Rules Docket. A copy of it may be obtained from the Rules Docket at the location provided under the caption **ADDRESSES**.

List of Subjects in 14 CFR Part 39

Air transportation, Aircraft, Aviation safety, Incorporation by reference, Safety.

Adoption of the Amendment

Accordingly, pursuant to the authority delegated to me by the Administrator, the Federal Aviation Administration amends part 39 of the Federal Aviation Regulations (14 CFR part 39) as follows:

PART 39—AIRWORTHINESS DIRECTIVES

1. The authority citation for part 39 continues to read as follows:

Authority: 49 U.S.C. 106(g), 40113, 44701.

§ 39.13 [Amended]

2. Section 39.13 is amended by removing amendment 39–11063 (64 FR 10935, March 8, 1999), and by adding a new airworthiness directive (AD), amendment 39–11906, to read as follows:

2000–19–05 Boeing: Amendment 39–11906. Docket 99–NM–69–AD. Supersedes AD 99–05–15, Amendment 39–11063.

Applicability: Model 737–100, –200, –200C, –300, –400, and –500 series airplanes; line numbers 1 through 2939 inclusive; certificated in any category.

Note 1: This AD applies to each airplane identified in the preceding applicability provision, regardless of whether it has been modified, altered, or repaired in the area subject to the requirements of this AD. For airplanes that have been modified, altered, or repaired so that the performance of the requirements of this AD is affected, the owner/operator must request approval for an alternative method of compliance in accordance with paragraph (c)(1) of this AD. The request should include an assessment of the effect of the modification, alteration, or repair on the unsafe condition addressed by this AD; and, if the unsafe condition has not been eliminated, the request should include specific proposed actions to address it.

Compliance: Required as indicated, unless accomplished previously.

To prevent detachment of an elevator tab push rod due to a detached nut at either end attachment of a push rod, which could result in excessive high-frequency airframe vibration during flight; consequent structural damage to the elevator tab, elevator, and horizontal stabilizer; and reduced controllability of the airplane; accomplish the following:

Restatement of Requirements of AD 99–05–15

One-Time Inspection

(a) Within 90 days after March 23, 1999 (the effective date of AD 99–05–15, amendment 39–11063): Perform a one-time inspection of all attachment nuts at each end of each elevator tab push rod to measure the run-on torque values of the nuts, in accordance with Boeing Alert Service Bulletin 737–27A1205, dated August 28, 1997.

Corrective Actions

(1) If the run-on torque value of any end attachment nut is within the limits specified in the alert service bulletin, prior to further flight, ensure that the final seating torque of the attachment nuts is within the torque values specified in the alert service bulletin.

(2) If the run-on torque value of any end attachment nut is outside the limits specified in the alert service bulletin, prior to further flight, replace all existing bolts and attachment nuts at each end of each elevator tab push rod with new bolts and self-locking castellated nuts that have cotter pins installed as a secondary locking feature, in accordance with Boeing Service Letter 737–SL–27–118–D, dated December 17, 1999, and ensure that the final seating torque of the nuts is within the torque values specified in the service letter.

Note 2: Accomplishment of the inspection and ensuring adequate final seating torque values prior to the effective date of this AD in accordance with Boeing All-Base Telex M–7272–97–0897, dated February 13, 1997, are considered acceptable for compliance with the actions specified in paragraphs (a) and (a)(1) of this AD for only the forward attachment nuts.

New Requirements of This AD

Replacement

(b) Within 12 months or 4,000 flight cycles after the effective date of this AD, whichever occurs first: Replace all existing bolts and attachment nuts at the forward and aft end attachment of each elevator tab push rod with new bolts and self-locking castellated nuts that have cotter pins installed as a secondary locking feature, in accordance with Boeing Service Letter 737–SL–27–118–D, dated December 17, 1999.

Note 3: Replacements accomplished prior to the effective date of this AD in accordance with Boeing Service Letter 737–SL–27–118–A, dated November 14, 1997; 737–SL–27–118–B, dated April 14, 1999; or 737–SL–27–118–C, dated May 19, 1999; are considered acceptable for compliance with paragraphs (a)(2) and (b) of this AD.

Alternative Methods of Compliance

(c)(1) An alternative method of compliance or adjustment of the compliance time that provides an acceptable level of safety may be used if approved by the Manager, Seattle Aircraft Certification Office (ACO), FAA. Operators shall submit their requests through an appropriate FAA Principal Maintenance Inspector, who may add comments and then send it to the Manager, Seattle ACO.

(2) Alternative methods of compliance, approved previously in accordance with AD 99–05–15, amendment 39–11063, are considered to be approved as alternative methods of compliance with paragraph (a) of this AD only.

Note 4: Information concerning the existence of approved alternative methods of compliance with this AD, if any, may be obtained from the Seattle ACO.

Special Flight Permits

(d) Special flight permits may be issued in accordance with sections 21.197 and 21.199 of the Federal Aviation Regulations (14 CFR 21.197 and 21.199) to operate the airplane to a location where the requirements of this AD can be accomplished.

Incorporation by Reference

(e) The actions shall be done in accordance with Boeing Alert Service Bulletin 737–27A1205, dated August 28, 1997, and Boeing Service Letter 737–SL–27–118–D, dated December 17, 1999.

(1) The incorporation by reference of Boeing Service Letter 737–SL–27–118–D, dated December 17, 1999, is approved by the Director of the Federal Register in accordance with 5 U.S.C. 552(a) and 1 CFR part 51.

(2) The incorporation by reference of Boeing Alert Service Bulletin 737–27A1205, dated August 28, 1997, was approved previously by the Director of the Federal Register as of March 23, 1999 (64 FR 10935, March 8, 1999).

(3) Copies may be obtained from Boeing Commercial Airplane Group, P.O. Box 3707, Seattle, Washington 98124–2207. Copies may be inspected at the FAA, Transport Airplane Directorate, 1601 Lind Avenue, SW., Renton, Washington; or at the Office of the Federal Register, 800 North Capitol Street, NW., suite 700, Washington, DC.

(f) This amendment becomes effective on October 25, 2000.

Issued in Renton, Washington, on September 12, 2000.

Donald L. Riggin,

Acting Manager, Transport Airplane Directorate, Aircraft Certification Service.

[FR Doc. 00–23856 Filed 9–19–00; 8:45 am]

BILLING CODE 4910–13–P

DEPARTMENT OF TRANSPORTATION

Federal Aviation Administration

14 CFR Part 39

[Docket No. 2000–NM–43–AD; Amendment 39–11907; AD 2000–19–06]

RIN 2120–AA64

Airworthiness Directives; Airbus Model A330 and A340 Series Airplanes

AGENCY: Federal Aviation Administration, DOT.

ACTION: Final rule; request for comments.

SUMMARY: This amendment adopts a new airworthiness directive (AD), applicable to certain Airbus Model A330 and A340 series airplanes. This action requires modifying the bottom skin panel 3 (located aft of the rear spar). This action is necessary to prevent corrosion and consequent reduced structural integrity of the wings due to lack of cold expansion of an existing drain hole, which could lead to cracks initiating from that drain hole; and the incorrect location of the drain hole, which can allow moisture to be trapped. This action is intended to address the identified unsafe condition.

DATES: Effective October 5, 2000.

The incorporation by reference of certain publications listed in the regulations is approved by the Director of the Federal Register as of October 5, 2000.

Comments for inclusion in the Rules Docket must be received on or before October 20, 2000.

ADDRESSES: Submit comments in triplicate to the Federal Aviation Administration (FAA), Transport Airplane Directorate, ANM–114, Attention: Rules Docket No. 2000–NM–43–AD, 1601 Lind Avenue, SW., Renton, Washington 98055–4056. Comments may be inspected at this location between 9:00 a.m. and 3:00 p.m., Monday through Friday, except Federal holidays. Comments may be submitted via fax to (425) 227–1232. Comments may also be sent via the Internet using the following address: 9-anm-iarcomment@faa.gov. Comments

sent via fax or the Internet must contain ''Docket No. 2000–NM–43–AD'' in the subject line and need not be submitted in triplicate. Comments sent via the Internet as attached electronic files must be formatted in Microsoft Word 97 for Windows or ASCII text.

The service information referenced in this AD may be obtained from Airbus Industrie, 1 Rond Point Maurice Bellonte, 31707 Blagnac Cedex, France. This information may be examined at the FAA, Transport Airplane Directorate, 1601 Lind Avenue, SW., Renton, Washington; or at the Office of the Federal Register, 800 North Capitol Street, NW., suite 700, Washington, DC.

FOR FURTHER INFORMATION CONTACT: Norman B. Martenson, Manager, International Branch, ANM–116, FAA, Transport Airplane Directorate, 1601 Lind Avenue, SW., Renton, Washington 98055–4056; telephone (425) 227–2110; fax (425) 227–1149.

SUPPLEMENTARY INFORMATION: The Direction Generale de l'Aviation Civile (DGAC), which is the airworthiness authority for France, notified the FAA that an unsafe condition may exist on certain Airbus Model A330 and A340 series airplanes. The DGAC advises that cold expansion of the existing drain hole in bottom skin panel 3 (located aft of the rear spar) was not performed during manufacture of the airplane. Such lack of cold expansion could lead to cracks initiating from the drain hole. In addition, in-service experience has shown that the location of this drain hole traps moisture which results in corrosion. These conditions, if not corrected, could result in corrosion and consequent reduced structural integrity of the wings.

Explanation of Relevant Service Information

Airbus has issued Service Bulletins A330–57–3060 (for Model A330 series airplanes) and A340–57–4068 (for Model A340 series airplanes), both Revision 01, both dated December 6, 1999. These service bulletins describe procedures for modifying the bottom skin panel 3 (located aft of the rear spar) on the left and right wings. The modification involves cold expanding the existing drain hole [including performing a high frequency eddy current (HFEC) rototest inspection of the drain hole for cracks, cold expanding the drain hole, and drilling and reaming the drain hole to a specific diameter]. The modification also entails adding another drain hole, if necessary (including drilling and reaming the new drain hole to a specific diameter, and cold expanding the drain hole).

Accomplishment of the actions specified in the service bulletins is intended to adequately address the identified unsafe condition. The DGAC classified these service bulletins as mandatory and issued French airworthiness directives 2000–158–119(B) and 2000–157–145(B), both dated April 5, 2000, in order to assure the continued airworthiness of these airplanes in France.

FAA's Conclusions

These airplane models are manufactured in France and are type certificated for operation in the United States under the provisions of section 21.29 of the Federal Aviation Regulations (14 CFR 21.29) and the applicable bilateral airworthiness agreement. Pursuant to this bilateral airworthiness agreement, the DGAC has kept the FAA informed of the situation described above. The FAA has examined the findings of the DGAC, reviewed all available information, and determined that AD action is necessary for products of this type design that are certificated for operation in the United States.

Explanation of Requirements of the Rule

Since an unsafe condition has been identified that is likely to exist or develop on other airplanes of the same type design registered in the United States, this AD is being issued to prevent corrosion and consequent reduced structural integrity of the wings due to lack of cold expansion of an existing drain hole, which could lead to cracks initiating from that drain hole; and the incorrect location of the drain hole, which can allow moisture to be trapped. This AD requires accomplishment of the actions specified in the service bulletins described previously, except as discussed below.

Difference Between Service Bulletins and This AD

Operators should note that, although the service bulletins specify that the manufacturer may be contacted for disposition of certain repair conditions, this AD requires the repair of those conditions to be accomplished in accordance with a method approved by the FAA.

Cost Impact

Three of the Model A330 series airplanes affected by this action are on the U.S. Register; however, the FAA has been advised that the actions required by this AD have been accomplished on those airplanes. None of the Model A340 series airplanes affected by this action are on the U.S. Register. All Model A340 series airplanes included in the applicability of this rule currently are operated by non-U.S. operators under foreign registry; therefore, they are not directly affected by this AD action. However, the FAA considers that this rule is necessary to ensure that the unsafe condition is addressed in the event that any of these subject airplanes are imported and placed on the U.S. Register in the future.

Should an affected airplane be imported and placed on the U.S. Register in the future, it would require approximately 5 work hours to accomplish the required actions, at an average labor rate of $60 per work hour. Based on these figures, the cost impact of this AD would be $300 per airplane.

Determination of Rule's Effective Date

Since this AD action does not affect any airplane that is currently on the U.S. register, it has no adverse economic impact and imposes no additional burden on any person. Therefore, prior notice and public procedures hereon are unnecessary and the amendment may be made effective in less than 30 days after publication in the **Federal Register**.

Comments Invited

Although this action is in the form of a final rule and was not preceded by notice and opportunity for public comment, comments are invited on this rule. Interested persons are invited to comment on this rule by submitting such written data, views, or arguments as they may desire. Communications shall identify the Rules Docket number and be submitted in triplicate to the address specified under the caption **ADDRESSES**. All communications received on or before the closing date for comments will be considered, and this rule may be amended in light of the comments received. Factual information that supports the commenter's ideas and suggestions is extremely helpful in evaluating the effectiveness of the AD action and determining whether additional rulemaking action would be needed.

Submit comments using the following format:

- Organize comments issue-by-issue. For example, discuss a request to change the compliance time and a request to change the service bulletin reference as two separate issues.
- For each issue, state what specific change to the AD is being requested.
- Include justification (*e.g.*, reasons or data) for each request.

Comments are specifically invited on the overall regulatory, economic, environmental, and energy aspects of

the rule that might suggest a need to modify the rule. All comments submitted will be available, both before and after the closing date for comments, in the Rules Docket for examination by interested persons. A report that summarizes each FAA-public contact concerned with the substance of this AD will be filed in the Rules Docket.

Commenters wishing the FAA to acknowledge receipt of their comments submitted in response to this rule must submit a self-addressed, stamped postcard on which the following statement is made: ''Comments to Docket Number 2000–NM–43–AD.'' The postcard will be date stamped and returned to the commenter.

Regulatory Impact

The regulations adopted herein will not have a substantial direct effect on the States, on the relationship between the national Government and the States, or on the distribution of power and responsibilities among the various levels of government. Therefore, it is determined that this final rule does not have federalism implications under Executive Order 13132.

For the reasons discussed above, I certify that this action (1) Is not a ''significant regulatory action'' under Executive Order 12866; (2) is not a ''significant rule'' under DOT Regulatory Policies and Procedures (44 FR 11034, February 26, 1979); and (3) will not have a significant economic impact, positive or negative, on a substantial number of small entities under the criteria of the Regulatory Flexibility Act. A final evaluation has been prepared for this action and it is contained in the Rules Docket. A copy of it may be obtained from the Rules Docket at the location provided under the caption **ADDRESSES**.

List of Subjects in 14 CFR Part 39

Air transportation, Aircraft, Aviation safety, Incorporation by reference, Safety.

Adoption of the Amendment

Accordingly, pursuant to the authority delegated to me by the Administrator, the Federal Aviation Administration amends part 39 of the Federal Aviation Regulations (14 CFR part 39) as follows:

PART 39—AIRWORTHINESS DIRECTIVES

1. The authority citation for part 39 continues to read as follows:

Authority: 49 U.S.C. 106(g), 40113, 44701.

§ 39.13 [Amended]

2. Section 39.13 is amended by adding the following new airworthiness directive:

2000–19–06 Airbus Industrie: Amendment 39–11907. Docket 2000–NM–43–AD.

Applicability: Model A330–202, –223, –301, –321, and –322 series airplanes having manufacturer's serial numbers (MSN) 0012 through 0244 inclusive; and Model A340–211, –212, –213, –311, –312, and –313 series airplanes having MSN's 0002 through 0245 inclusive; certificated in any category.

Note 1: This AD applies to each airplane identified in the preceding applicability provision, regardless of whether it has been modified, altered, or repaired in the area subject to the requirements of this AD. For airplanes that have been modified, altered, or repaired so that the performance of the requirements of this AD is affected, the owner/operator must request approval for an alternative method of compliance in accordance with paragraph (c) of this AD. The request should include an assessment of the effect of the modification, alteration, or repair on the unsafe condition addressed by this AD; and, if the unsafe condition has not been eliminated, the request should include specific proposed actions to address it.

Compliance: Required as indicated, unless accomplished previously.

To prevent corrosion and consequent reduced structural integrity of the wings due to lack of cold expansion of an existing drain hole, which could lead to cracks initiating from that drain hole; and the incorrect location of the drain hole, which can allow moisture to be trapped; accomplish the following:

Modification

(a) Modify the bottom skin panel 3, located aft of the rear spar on the left and right wings, by cold expanding the existing drain hole [including performing a high frequency eddy current (HFEC) rototest inspection of the hole for cracks, cold expanding the hole, and drilling and reaming the hole to a specific diameter], and by adding another drain hole, as necessary (including drilling and reaming the new hole to a specific diameter, and cold expanding the hole). Accomplish the actions in accordance with Airbus Service Bulletin A330–57–3060 (for Model A330 series airplanes) or A340–57–4068 (for Model A340 series airplanes), both Revision 01, both dated December 6, 1999; as applicable; at the time specified in paragraph (a)(1), (a)(2), (a)(3), or (a)(4) of this AD, as applicable.

(1) For Model A330–202 and –223 series airplanes: Prior to the accumulation of 9,600 total landings or 32,600 total flight hours, whichever occurs first.

(2) For Model A330–301, –321, and –322 series airplanes: Prior to the accumulation of 15,000 total landings or 51,000 total flight hours, whichever occurs first.

(3) For Model A340–211, –212, –213, –311, –312, and –313 series airplanes on which Airbus Modification 41300 has NOT been accomplished prior to the effective date of this AD: Prior to the accumulation of 10,800 total landings or 48,000 total flight hours, whichever occurs first.

(4) For Model A340–213 and –313 series airplanes on which Airbus Modification 41300 has been accomplished prior to the effective date of this AD: Prior to the accumulation of 8,100 total landings or 36,000 total flight hours, whichever occurs first.

Certain Repairs

(b) If any damage is found during accomplishment of the modification required by paragraph (a) of this AD, and the applicable service bulletin specifies to contact Airbus for appropriate action: Prior to further flight, repair in accordance with a method approved by the Manager, International Branch, ANM–116, FAA, Transport Airplane Directorate. For a repair method to be approved by the Manager, International Branch, ANM–116, as required by this paragraph, the Manager's approval letter must specifically reference this AD.

Alternative Methods of Compliance

(c) An alternative method of compliance or adjustment of the compliance time that provides an acceptable level of safety may be used if approved by the Manager, International Branch, ANM–116, FAA. Operators shall submit their requests through an appropriate FAA Principal Maintenance Inspector, who may add comments and then send it to the Manager, International Branch, ANM–116.

Note 2: Information concerning the existence of approved alternative methods of compliance with this AD, if any, may be obtained from the International Branch, ANM–116.

Special Flight Permits

(d) Special flight permits may be issued in accordance with sections 21.197 and 21.199 of the Federal Aviation Regulations (14 CFR 21.197 and 21.199) to operate the airplane to a location where the requirements of this AD can be accomplished.

Incorporation by Reference

(e) Except as provided by paragraph (b) of this AD, the actions shall be done in accordance with Airbus Service Bulletin A330–57–3060, Revision 01, dated December 6, 1999; or Airbus Service Bulletin A340–57–4068, Revision 01, dated December 6, 1999; as applicable. This incorporation by reference was approved by the Director of the Federal Register in accordance with 5 U.S.C. 552(a) and 1 CFR part 51. Copies may be obtained from Airbus Industrie, 1 Rond Point Maurice Bellonte, 31707 Blagnac Cedex, France. Copies may be inspected at the FAA, Transport Airplane Directorate, 1601 Lind Avenue, SW., Renton, Washington; or at the Office of the Federal Register, 800 North Capitol Street, NW., suite 700, Washington, DC.

Note 3: The subject of this AD is addressed in French airworthiness directives 2000–158–119(B) and 2000–157–145(B), both dated April 5, 2000.

Effective Date

(f) This amendment becomes effective on October 5, 2000.

Issued in Renton, Washington, on September 13, 2000.

Donald L. Riggin,

Acting Manager, Transport Airplane Directorate, Aircraft Certification Service.

[FR Doc. 00–23999 Filed 9–19–00; 8:45 am]

BILLING CODE 4910–13–P

DEPARTMENT OF TRANSPORTATION

Federal Aviation Administration

14 CFR Part 71

[Airspace Docket No. 00–ASO–26]

Amendment to Class D Airspace, Melbourne, FL

AGENCY: Federal Aviation Administration (FAA), DOT.

ACTION: Final rule.

SUMMARY: This action amends Class D airspace at Melbourne International Airport, FL, by lowering the airspace ceiling from 2,500 feet above ground level (AGL) to 1,900 feet AGL. Due to the high number of overflying aircraft, in the interest of safety the airspace above 1,900 AGL has been delegated by the Melbourne Air Traffic Control Tower, which provides Visual Flight Rules (VFR) service to aircraft operating in the vicinity of the Melbourne International Airport, to the Daytona Beach Radar Approach Control Facility, which provides Instrument Flight Rules (IFR) air traffic control service to the Melbourne International Airport. This action also changes the name of the airport in the legal description from Melbourne Regional to Melbourne International Airport.

EFFECTIVE DATE: 0901 UTC, November 30, 2000.

FOR FURTHER INFORMATION CONTACT: Nancy B. Shelton, Manager, Airspace Branch, Air Traffic Division, Federal Aviation Administration, P.O. Box 20636, Atlanta, Georgia 30320; telephone (404) 305–5586.

SUPPLEMENTARY INFORMATION:

History

On July 14, 2000, the FAA proposed to amend part 71 of the Federal Aviation Regulations (14 CFR part 71) by amending Class D airspace at Melbourne, FL (65 FR 43722). Class D airspace designations are published in Paragraph 5000 of FAA Order 7400.9G, dated September 1, 1999, and effective September 16, 1999, which is incorporated by reference in 14 CFR 71.1. The Class D airspace designation listed in this document will be published subsequently in the Order.

Interested parties were invited to participate in this rulemaking proceeding by submitting written comments on the proposal to the FAA. No comments objecting to the proposal were received.

The Rule

This amendment to Part 71 of the Federal Aviation Regulations (14 CFR part 71) amends Class D airspace at Melbourne, FL.

The FAA has determined that this regulation only involves an established body of technical regulations for which frequent and routine amendments are necessary to keep them operationally current. It, therefore, (1) Is not a ''significant regulatory action'' under Executive Order 12866; (2) is not a ''significant rule'' under DOT Regulatory Policies and Procedures (44 FR 11034; February 26, 1979); and (3) does not warrant preparation of a regulatory evaluation as the anticipated impact is so minimal. Since this is a routine matter that will only affect air traffic procedures and air navigation, it is certified that this rule will not have a significant economic impact on a substantial number of small entities under the criteria of the Regulatory Flexibility Act.

List of Subjects in 14 CFR Part 71

Airspace, Incorporation by reference, Navigation (air).

Adoption of the Amendment

In consideration of the foregoing, the Federal Aviation Administration amends 14 CFR Part 71 as follows:

PART 71—DESIGNATION OF CLASS A, CLASS B, CLASS C, CLASS D AND CLASS E AIRSPACE AREAS; AIRWAYS; ROUTES; AND REPORTING POINTS

1. The authority citation for 14 CFR Part 71 continues to read as follows:

Authority: 49 U.S.C. 106(g); 40103, 40113, 40120; EO 10854, 24 FR 9565, 3 CFR, 1959–1963 Comp., p. 389; 14 CFR 11.69.

§ 71.1 [Amended]

2. The incorporation by reference in 14 CFR 71.1 of Federal Aviation Administration Order 7400.9G, Airspace Designations and Reporting Points, dated September 1, 1999, and effective September 16, 1999, is amended as follows:

Paragraph 5000 Class D Airspace.

* * * * *

ASO FL D Melbourne, FL [Revised]

Melbourne International Airport, FL
(Lat. 28°06′10″ N, long. 80°38′45″ W)

Patrick AFB
(Lat. 28°14′22″ N, long. 80°36′27″ W)

That airspace extending upward from the surface, to and including 1,900 feet MSL within a 4.3-mile radius of the Melbourne International Airport, excluding the portion north of a line connecting the 2 points of intersection with a 5.3-mile radius circle centered on Patrick AFB. This Class D airspace area is effective during the specific dates and times established in advance by a Notice to Airmen. The effective dates and times will thereafter be continuously published in the Airport/Facility Directory.

* * * * *

Issued in College Park, Georgia, on September 7, 2000.

Marvin A. Burnette,

Acting Manager, Air Traffic Division, Southern Region.

[FR Doc. 00–24144 Filed 9–19–00; 8:45 am]

BILLING CODE 4910–13–M

DEPARTMENT OF THE TREASURY

Customs Service

19 CFR Parts 4 and 178

[T.D. 00–61]

RIN 1515–AC35

Vessel Equipment Temporarily Landed for Repair

AGENCY: Customs Service, Department of the Treasury.

ACTION: Final rule.

SUMMARY: This document amends the Customs Regulations to provide for the temporary landing in the United States of vessel equipment in need of repair, without requiring entry of that equipment under a Temporary Importation Bond (TIB). Instead, such equipment may be landed from a vessel for repair and then reladen aboard the same vessel, subject to Customs issuance of a special permit or license for the landed equipment, under an International Carrier Bond. Uncertainty had existed as to whether the relading of repaired equipment on vessels departing the United States would satisfy the TIB requirement that such merchandise be exported. The amendment eliminates this uncertainty while still allowing Customs adequate control over vessel equipment that is landed for repair and thereafter reladen aboard the same vessel.

EFFECTIVE DATE: October 20, 2000.

FOR FURTHER INFORMATION CONTACT: Larry L. Burton, Office of Regulations and Rulings, 202–927–1287.

SUPPLEMENTARY INFORMATION:

Background

Section 446, Tariff Act of 1930, as amended (19 U.S.C. 1446), provides that vessels arriving in the United States from foreign ports may retain vessel equipment and other named items aboard without the payment of duty. The statute also provides, however, that any of the named items which are landed and delivered from such a vessel are considered and treated as imported merchandise.

The cited statute is implemented by § 4.39 of the Customs Regulations (19 CFR 4.39), paragraph (b) of which provides that any articles other than cargo or baggage that are landed for delivery for consumption in this country are treated the same as any other imported article. Articles imported for consumption into the United States are subject to merchandise entry and the payment of applicable duty.

It is Customs view that when necessary equipment is unladed from a vessel only temporarily for the purpose of being repaired and then reladen aboard the vessel, it is not being delivered for consumption into the commerce of the United States. It is also clear, however, that when anything is landed in the United States, Customs has the duty and responsibility to exercise sufficient control and to protect the revenue from any unlawful introduction of merchandise into the commerce of the country.

There has been a lack of uniformity in the treatment that Customs has accorded vessel equipment temporarily landed for repair and relading. Some ports have employed Temporary Importation Bond (TIB) procedures in seeking to provide the necessary mechanisms for Customs control and the protection of the revenue, but a problem has existed with the use of a TIB for this purpose. While a TIB would adequately protect the revenue during the period when vessel equipment was in the United States, the bond provisions could only be satisfied and potential liability extinguished when the covered equipment was exported from the United States.

Exportation is defined in § 101.1 of the Customs Regulations (19 CFR 101.1), which provides that something is exported when it is separated from the goods of this country with the intent that it be made a part of the goods belonging to some foreign country. Customs does not believe that relading vessel equipment which is intended to remain aboard that vessel meets the definition of exportation. Accordingly, TIB bond liability may not be adequately terminated.

Section 4.30 of the Customs Regulations (19 CFR 4.30) provides that in all cases relevant to the present circumstances, no cargo, baggage, or other articles may be unladed from or laded upon any vessel arriving directly or indirectly from a foreign port or place, unless the Customs port director issues a permit allowing the activity (Customs Form (CF) 3171). This would provide adequate control by Customs over equipment unladings and ladings in terms of advance notice and actual knowledge.

Further, operators of vessels, or vessel agents acting in their stead, either have in place or can be required by local Customs officials to obtain International Carrier Bonds as reproduced in § 113.64, Customs Regulations (19 CFR 113.64). Paragraph (b) of that bond provision (§ 113.64(b)) obligates the bond for matters relating to the unlading, safekeeping, and disposition of merchandise, supplies, crew purchases, and other articles to be found on a vessel. This would provide adequate protection of the revenue in terms of any potential introduction of temporarily landed vessel equipment into the commerce of the United States.

Accordingly, by a document published in the **Federal Register** (64 FR 13370) on March 18, 1999, Customs proposed to add a new paragraph (g) to § 4.39 of the Customs Regulations (19 CFR 4.39(g)) to provide that equipment of a vessel arriving either directly or indirectly from a foreign port or place, if in need of repair, could be landed temporarily in order to be repaired. Unlading and relading would be in accord with the permit provisions of § 4.30, and the appropriate International Carrier Bond would be obligated as provided under § 113.64(b).

Discussion of Comment

Counsel on behalf of a vessel operating company submitted the only comment in response to the notice of proposed rulemaking. The commenter supported the proposal, stating that vessel operators would be relieved of needless and burdensome procedures by its implementation. However, the commenter suggested that the proposed rule be changed to allow repaired equipment to be reladen aboard any vessel operated by the same company that landed the equipment for repair.

Customs has determined that the suggested change should not be adopted. As previously noted, Customs Form (CF) 3171 is the document by which Customs would track and control the movement of equipment landed for repair. The CF 3171 is executed for a specific named vessel and does not extend to all vessels of the same line which may wish to lade or unlade equipment in a particular port of entry. As such, Customs believes that it can best exercise control over the relading of repaired equipment by requiring that it be placed on the same vessel which landed it for repair in the United States.

Adoption of Proposal

In view of the foregoing, and following careful consideration of the comment received and further review of the matter, Customs has concluded that the proposed amendment published in the **Federal Register** (64 FR 13370) on March 18, 1999, should be adopted as a final rule without change.

Regulatory Flexibility Act and Executive Order 12866

Because this final rule merely provides a different method to allow vessel equipment to be temporarily landed for repair without the payment of duty, it is certified pursuant to the Regulatory Flexibility Act (5 U.S.C. 601 *et seq.*) that the rule will not have a significant economic impact on a substantial number of small entities. Accordingly, it is not subject to the regulatory analysis or other requirements of 5 U.S.C. 603 and 604. Nor does the document meet the criteria for a ''significant regulatory action'' as specified in Executive Order 12866.

Paperwork Reduction Act

The collections of information contained in this final rule document have previously been reviewed and approved by the Office of Management and Budget (OMB) in accordance with the Paperwork Reduction Act of 1995 (44 U.S.C. 3507) and assigned OMB control numbers 1515–0013 (Application-Permit-Special License, Unlading-Lading, Overtime Services (Customs Form 3171)) and 1515–0144 (Customs Bond Structure (Customs Form 301 and Customs Form 5297)). The document restates the collections of information without substantive change. An agency may not conduct or sponsor, and a person is not required to respond to, a collection of information unless the collection of information displays a valid control number.

Part 178, Customs Regulations (19 CFR part 178), is amended to make provision for these existing information collection approvals.

Drafting Information

The principal author of this document was Larry L. Burton, Office of Regulations and Rulings, U.S. Customs

Service. However, personnel from other offices participated in its development.

List of Subjects

19 CFR Part 4

Customs duties and inspection, Entry, Inspection, Merchandise, Reporting and recordkeeping requirements, Vessels.

19 CFR Part 178

Collections of information, Reporting and recordkeeping requirements.

Amendments to the Regulations

Parts 4 and 178, Customs Regulations (19 CFR parts 4 and 178), are amended as set forth below.

PART 4—VESSELS IN FOREIGN AND DOMESTIC TRADES

1. The general authority citation for part 4 as well as the specific authority citation for § 4.39 continue to read as follows:

Authority: 5 U.S.C. 301; 19 U.S.C. 66, 1431, 1433, 1434, 1624; 46 U.S.C. App. 3, 91;

* * * * *

Section 4.39 also issued under 19 U.S.C. 1446;

* * * * *

2. Section 4.39 is amended by adding a new paragraph (g) to read as follows:

§ 4.39 Stores and equipment of vessels and crews' effects; unlading or lading and retention on board.

* * * * *

(g) Equipment of a vessel arriving either directly or indirectly from a foreign port or place, if in need of repairs in the United States, may be unladen from and reladen upon the same vessel under the procedures set forth in § 4.30 relating to the granting of permits and special licenses on Customs Form 3171 (CF 3171). Adequate protection of the revenue is insured under the appropriate International Carrier Bond during the period that equipment is temporarily landed for repairs (see § 113.64(b) of this chapter), and so resort to the procedures established for the temporary importation of merchandise under bond is unnecessary. Once equipment which has been unladen under the terms of a CF 3171 has been reladen on the same vessel, potential liability for that transaction existing under the bond will be extinguished.

PART 178—APPROVAL OF INFORMATION COLLECTION REQUIREMENTS

1. The authority citation for part 178 continues to read as follows:

Authority: 5 U.S.C. 301; 19 U.S.C. 1624; 44 U.S.C. 3501 *et seq.*

2. Section 178.2 is amended by adding new listings in the table in appropriate numerical order to read as follows:

§ 178.2 Listing of OMB control numbers.

19 CFR section	Description	OMB control No.
*	*	*
§§ 4.10, 4.16, 4.30, 4.37, 4.39, 4.91, 10.60, 24.16, 122.29, 122.38, 123.8, 146.32, 146.34.	Application-Permit-Special License, Unlading-Lading, Overtime Services (Customs Form 3171).	1515–0013
*	*	*
Part 113	Customs Bond Structure (Customs Form 301 and Customs Form 5297)	1515–0144
*	*	*

Approved: June 18, 2000.

Raymond W. Kelly,

Commissioner of Customs.

John P. Simpson,

Deputy Assistant Secretary of the Treasury.

[FR Doc. 00–24098 Filed 9–19–00; 8:45 am]

BILLING CODE 4820–02–P

DEPARTMENT OF THE TREASURY

Customs Service

19 CFR Part 24

[T.D. 00–62]

RIN 1515–AC48

Endorsement of Checks Deposited by Customs

AGENCY: U.S. Customs Service, Department of the Treasury.

ACTION: Final rule.

SUMMARY: This document amends the Customs Regulations to reflect changes concerning information that authorized Customs employees are required to place on instruments (such as checks) tendered for payment of duties, taxes, and other fees and charges. These changes are designed to avoid a conflict with Federal Reserve System regulations that govern the endorsement of checks by banks.

EFFECTIVE DATE: October 20, 2000.

FOR FURTHER INFORMATION CONTACT: Gregory L. Pence, Branch Chief, Financial Policy Branch, Office of Finance ((202) 927–9183).

SUPPLEMENTARY INFORMATION:

Background

Under § 24.1 of the Customs Regulations (19 CFR 24.1), procedures for the collection of Customs duties, taxes, charges, and fees are set forth. Under § 24.1(b), applicable to noncommercial importations at piers, terminals, bridges, airports, and other similar places, Customs employees authorized to collect payments may accept a personal check and must ensure that certain information is recorded on the check. Under § 24.1(b)(1), with respect to personal checks received under § 24.1(b) and certain other checks and money orders received under § 24.1(a), Customs employees must show, on the reverse side of the check or money order, their name, badge number, and the serial or other identification number from the collection voucher.

Requirements applicable to banks endorsing checks are set forth under regulations of the Federal Reserve System (12 CFR 229.35) Appendix D to Part 229 of the Federal Reserve System regulations (Title 12, Chapter II)(entitled ''Indorsement Standards'') pertains to the endorsements of depositary, collecting, and returning banks. It sets forth the specific information that must or may be provided and requires that such information must be recorded on the reverse side of checks. The Appendix also provides that the readability, identifiability, and legibility of the depositary bank's endorsement must be protected. It cautions the depositary bank not to interfere with the readability of the endorsement, and it carefully sets forth specific requirements for collecting and returning banks to follow for the purpose of protecting that endorsement.

The requirement under the Customs Regulations that Customs employees must place information on the reverse side of monetary instruments conflicts with the purpose and intent of the requirements of 12 CFR 229.35 and App. D of Part 229 of Title 12 CFR

regarding the protection of bank endorsements. For this reason, Customs issued a Notice of Proposed Rulemaking, published in the **Federal Register** (64 FR 62619) on November 17, 1999, proposing that required information be placed on the face side of monetary instruments accepted for Customs payments. The notice requested comments on the proposed amendments. No comments were received. After further consideration of this matter, Customs has determined to adopt the proposed changes as a final rule. This document amends §§ 24.1(b) and 24.1(b)(1) of the Customs Regulations, accordingly.

Executive Order 12866

This document does not meet the criteria for a ''significant regulatory action'' as specified in Executive Order 12866.

Regulatory Flexibility Act

Pursuant to the provisions of the Regulatory Flexibility Act (5 U.S.C. 601 *et seq.*), it is certified that the amendments to the Customs Regulations set forth in this document will not have a significant economic impact on a substantial number of small entities. These amendments regarding the endorsement of checks and other instruments will improve the processing of these instruments, without any additional burden on businesses or individuals. Accordingly, these amendments are not subject to the regulatory analysis or other requirements of 5 U.S.C. 603 and 604.

Drafting Information

The principal author of this document was Bill Conrad, Office of Regulations and Rulings, U.S. Customs Service. Personnel from other offices contributed in its development.

List of Subjects in 19 CFR Part 24

Accounting, Claims, Customs duties and inspection, Fees, Financial and accounting procedures, Imports, Taxes.

Amendments to the Regulations

For the reasons stated in the preamble, part 24 of the Customs Regulations (19 CFR part 24) is amended as follows:

PART 24—CUSTOMS FINANCIAL AND ACCOUNTING PROCEDURE

1. The general authority citation for part 24 and the relevant specific authority citation continue to read as follows:

Authority: 5 U.S.C. 301; 19 U.S.C. 58a–58c, 66, 1202 (General Note 20, Harmonized Tariff Schedule of the United States), 1505, 1624; 26 U.S.C. 4461, 4462; 31 U.S.C. 9701.

Section 24.1 also issued under 19 U.S.C. 197, 198, 1648;

* * * * *

2. In § 24.1, the second and third sentences of introductory paragraph (b) and all of paragraph (b)(1) are revised to read as follows:

§ 24.1 Collection of Customs duties, taxes, and other charges.

* * * * *

(b) * * * Where the amount of the check is over $25, the Customs cashier or other employee authorized to receive Customs collections will ensure that the payor's name, home and business telephone number (including area code), and date of birth are recorded on the face (front) side of the monetary instrument. In addition, one of the following will be recorded on the face side of the instrument: preferably, the payor's social security number or, alternatively, a current passport number or current driver's license number (including issuing state). * * *

(1) Where the amount is less than $100 and the identification requirements of paragraph (a)(4) of this section have been met, the Customs employee accepting the check or money order will place his name and badge number on the collection voucher and place the serial number or other form of voucher identification on the face side of the check or money order so that the check or money order can be easily associated with the voucher.

* * * * *

Dated: Approved: July 18, 2000.

Raymond W. Kelly,

Commissioner of Customs.

John P. Simpson,

Deputy Assistant Secretary of the Treasury.

[FR Doc. 00–24099 Filed 9–19–00; 8:45 am]

BILLING CODE 4820–02–P

DEPARTMENT OF THE TREASURY

31 CFR Part 1

Internal Revenue Service; Privacy Act, Implementation

AGENCY: Office of the Secretary, Treasury.

ACTION: Final rule.

SUMMARY: In accordance with the requirements of the Privacy Act of 1974, 5 U.S.C. 552a, as amended, the Department of the Treasury gives notice of a final rule to exempt an Internal Revenue Service system of records entitled ''IRS Audit Trail and Security Records System—Treasury/IRS 34.037,'' from certain provisions of the Privacy Act. The exemption is intended to comply with the legal prohibitions against the disclosure of certain kinds of information and to protect certain information, about individuals, maintained in this system of records.

EFFECTIVE DATE: September 20, 2000.

FOR FURTHER INFORMATION CONTACT: David Silverman, Tax Law Specialist, 6103/Privacy Operations, Governmental Liaison and Disclosure, Internal Revenue Service, at 202–622–6200.

SUPPLEMENTARY INFORMATION: The Department of the Treasury published a notice of a proposed rule exempting a system of records from certain provisions of the Privacy Act of 1974, as amended, on November 17, 1999, at 64 FR 62620–62622. The Internal Revenue Service (IRS) published the system notice in its entirety on November 19, 1999, at 63 FR 63108. Under 5 U.S.C. 552a(k)(2), the head of an agency may promulgate rules to exempt any system of records within the agency from certain provisions of the Privacy Act of 1974, as amended, if the system is investigatory material compiled for law enforcement purposes. The IRS Audit Trail and Security Records System—Treasury/IRS 34.037 contains investigatory material compiled for law enforcement purposes.

The proposed rule requested that public comments be sent to the Governmental Liaison and Disclosure Office, Internal Revenue Service, 1111 Constitution Ave., NW, Washington, DC 20224, no later than January 22, 1999. The Governmental Liaison and Disclosure Office received comments addressing the issues below from one individual. As discussed below, no changes to the rule were made on the basis of these comments.

First, the commenter stated that the system notice lacked specificity as to the users of the system because the notice provided that ''[o]utside of IRS information systems, the office of the Treasury Inspector General for Tax Administration is the principal user of the data contained in this system of records.'' The use of the word ''principal'' would permit other personnel to have access to this system of records. The language in the current rule is the same that is used for the Treasury/IRS 34.020, the Audit Lead Trail Analysis System. This is because it is impossible to predict that only the information systems personnel and the Treasury Inspector General for Tax Administration may have a need to use this system. This system concerns primarily audit logs that track access to

sensitive but unclassified data for almost all IRS computer systems. Although generally the people who monitor such logs are information system administrators, there may be exceptions where personnel from another IRS function monitor the logs.

The commenter also expressed concern that government and non-law enforcement personnel will have access to and use of the system, and that the system should only exempt certain records depending on whether the information is being used for law enforcement purposes. All of the information is being used for law enforcement purposes, specifically to detect violations of applicable statutes, including 18 U.S.C. 1030(a)(2)(B) and 26 U.S.C. 6103, 7213, 7213A. Therefore, the entire system is entitled to the law enforcement exemption. The final concern expressed by the commenter was a lack of description of the specific records to be covered. This system is broad because it would be burdensome and confusing to the public to create multiple systems with corresponding multiple notices for the purpose of printing the same description of audit logs and security records used to monitor access.

Accordingly, the Department of the Treasury is hereby giving notice that the system of records entitled ''IRS Audit Trail and Security Records System—Treasury/IRS 34.037,'' is exempt from certain provisions of the Privacy Act. The provisions of the Privacy Act from which exemption is claimed pursuant to 5 U.S.C. 552a(k)(2) are as follows: 5 U.S.C. 552a (c)(3), (d)(1), (d)(2), (d)(3), (d)(4), (e)(1), (e)(4)(G) , (H) and (f).

As required by Executive Order 12866, it has been determined that this proposed rule is not a significant regulatory action, and therefore, does not require a regulatory impact analysis.

The regulation will not have a substantial direct effect on the States, on the relationship between the national Government and the States, or on the distribution of power and responsibilities among the various levels of government. Therefore, it is determined that this final rule does not have federalism implications under Executive Order 13132.

Pursuant to the requirements of the Regulatory Flexibility Act, 5 U.S.C. 601–612, it is hereby certified that these regulations will not significantly affect a substantial number of small entities. The proposed rule imposes no duties or obligations on small entities.

In accordance with the provisions of the Paperwork Reduction Act of 1995, the Department of the Treasury has determined that this final rule would not impose new record keeping, application, reporting, or other types of information collection requirements.

List of Subjects in 31 CFR Part 1

Privacy.

Part 1 of Title 31 of the Code of Federal Regulations is amended as follows:

1. The authority citation for part 1 continues to read as follows:

Authority: 5 U.S.C. 301 and 31 U.S.C. 321. Subpart A also issued under 5 U.S.C. 552, as amended. Subpart C also issued under 5 U.S.C. 552a.

§ 1.36 [Amended]

2. Section 1.36 of Subpart C is amended by adding the following text in numerical order in paragraph (b)(1) under the heading THE INTERNAL REVENUE SERVICE:

* * * * *

(b) * * *

(1) * * *

Name of system	No.
* * * * *	
IRS Audit Trail and Security Records System	34.037
* * * * *	

* * * * *

Dated: September 13, 2000.

W. Earl Wright, Jr.,

Chief Management and Administrative Programs Officer.

[FR Doc. 00–24167 Filed 9–19–00; 8:45 am]

BILLING CODE 4830–01–P

DEPARTMENT OF TRANSPORTATION

Coast Guard

33 CFR Part 117

[CGD05–00–042]

Drawbridge Operation Regulations; Milford Haven, VA

AGENCY: Coast Guard, DOT.

ACTION: Notice of temporary deviation from regulations.

SUMMARY: The Commander, Fifth Coast Guard District, has approved a temporary deviation from the regulations governing the operation of the Gwynns Island Drawbridge across Milford Haven, mile 0.1, in Grimstead, Virginia. Beginning at 6 a.m. on September 25, through 6 p.m. on November 23, 2000, the bridge may remain in the closed position. This closure is necessary to encapsulate the entire bridge structure for painting.

DATES: This deviation is effective from 6 a.m. on September 25 until 6 p.m. on November 23, 2000.

FOR FURTHER INFORMATION CONTACT: Ann B. Deaton, Bridge Administrator, Fifth Coast Guard District, at (757) 398–6222.

SUPPLEMENTARY INFORMATION: The Coast Guard received an electronic e-mail from the Virginia Department of Transportation July 28, 2000, requesting a temporary deviation from the current operating schedule of the Gwynns Island drawbridge. Presently, the draw is required to open on signal at all times. This requirement is included in the general operating regulations at 33 CFR 117.5. The work to be performed on the Gwynns Island Drawbridge primarily consists of encapsulating the entire structure with a canvas shroud, sand blasting the old paint off, then applying several coats of fresh paint.

This work requires completely immobilizing the operation of the swing span. In accordance with 33 CFR 117.35, the District Commander approved VDOT's request for a temporary deviation from the governing regulations in a letter dated August 23, 2000.

The Coast Guard has informed the known users of the waterway of the bridge closure so that these vessels can arrange their transits to minimize any impact caused by the temporary deviation.

The temporary deviation allows the Gwynns Island Drawbridge across the Milford Haven, mile 0.1, in Grimstead, Virginia to remain closed from 6 a.m. on September 25, until 6 p.m. on November 23, 2000.

Dated: September 11, 2000.

J. E. Shkor,

U.S. Coast Guard, Commander, Fifth Coast Guard District.

[FR Doc. 00–24168 Filed 9–19–00; 8:45 am]

BILLING CODE 4910–15–P

DEPARTMENT OF COMMERCE

United States Patent and Trademark Office

37 CFR Chapter I and Part 1

RIN 0651–AB15

Simplification of Certain Requirements in Patent Interference Practice

September 15, 2000.

AGENCY: United States Patent and Trademark Office, Commerce.

ACTION: Interim rule with request for comments.

SUMMARY: The United States Patent and Trademark Office (USPTO) amends its rules of practice in patent interferences to simplify certain requirements relating to the declaration of interferences and the presentation of evidence. USPTO is also revising its CFR chapter heading to reflect its new name.

DATES: *Effective Date:* October 20, 2000.

Comment Date: Submit comments on or before October 20, 2000.

ADDRESSES: Send all comments:

1. Electronically to ''Interference.Rules@uspto.gov,'' Subject: ''Interference Simplification''; or

2. By mail to Director of the United States Patent and Trademark Office, BOX INTERFERENCE, Washington, D.C. 20231, ATTN: ''Interference Simplification''; or

3. By facsimile to 703–305–9373, ATTN: ''Interference Simplification.''

FOR FURTHER INFORMATION CONTACT: Fred McKelvey or Richard Torczon at 703–308–9797.

SUPPLEMENTARY INFORMATION:

Comment Format

The USPTO prefers to receive comments in electronic form, either via the Internet or on a 3¼-inch diskette. Comments submitted in electronic form should be submitted as ASCII text. Special characters and encryption should not be used.

Background

The USPTO is amending 37 CFR §§ 1.601(f) and 1.606 and is deleting 37 CFR § 1.609 because the requirements being eliminated presented obstacles to the efficient declaration of interferences without corresponding benefits. In particular, Rules 601(f) and 606 create a presumption about the scope of the interfering subject matter that often is not supported by the record. The change eliminates that presumption. The changes in sections 1.601(f) and 1.606, as well as changes in the process of proposing an interference in the examining corps, have made section 1.609 unnecessary. Now an administrative patent judge meets with a representative from the technology center to ensure that the record contains adequate bases for declaring an interference.

The USPTO is amending 37 CFR § 1.671 to provide that all evidence is presented in the form of an exhibit. This simplifying amendment to § 1.671 makes the more complex requirements of 37 CFR §§ 1.682, 1.683, and 1.688 unnecessary, so they are being deleted. An interim rule is appropriate because the rulemaking is not substantive and the elimination of these requirements provides relief from unnecessary requirements. The USPTO appreciates that other changes to the rules of practice in patent interferences may be appropriate, but this interim rule is not an appropriate vehicle for such changes, which will have to be addressed in future rulemaking. These rule changes will apply to any interference declared after the effective date of this rulemaking and to any interference in which these changes are adopted by order.

Regulatory Flexibility Act

This rulemaking is procedural and is not subject to the requirements of 5 U.S.C. 553 so no initial regulatory flexibility analysis is required under 5 U.S.C. 603.

Executive Order 13132: Federalism Assessment

This rulemaking does not contain policies with federalism implications sufficient to warrant preparation of a Federalism Assessment under Executive Order 13132 (August 4, 1999).

Executive Order 12866

This rulemaking has been determined to be not significant for purposes of Executive Order 12866 (September 30, 1993).

Paperwork Reduction Act

This interim rule creates no information collection requirements subject to the Paperwork Reduction Act of 1995 (44 U.S.C. 3501 *et seq.*).

List of Subjects in 37 CFR Part 1

Administrative practice and procedure, Inventions and patents.

For the reasons stated in the preamble, the United States Patent and Trademark Office amends 37 CFR Chapter I as follows:

1. The heading of Chapter I is revised to read as follows:

CHAPTER I—UNITED STATES PATENT AND TRADEMARK OFFICE, DEPARTMENT OF COMMERCE

PART 1—RULES OF PRACTICE IN PATENT CASES

1a. The authority citation for 37 CFR part 1 continues to read as follows:

Authority: 35 U.S.C. 6, unless otherwise noted.

2. Amend § 1.601 by revising paragraph (f) to read as follows:

§ 1.601 Scope of rules, definitions.

* * * * *

(f) A *count* defines the interfering subject matter between two or more applications or between one or more applications and one or more patents. When there is more than one count, each count shall define a separate patentable invention. Any claim of an application or patent that is designated to correspond to a count is a claim involved in the interference within the meaning of 35 U.S.C. 135(a). A claim of a patent or application that is designated to correspond to a count and is identical to the count is said to correspond exactly to the count. A claim of a patent or application that is designated to correspond to a count but is not identical to the count is said to correspond substantially to the count. When a count is broader in scope than all claims which correspond to the count, the count is a phantom count.

* * * * *

3. Revise § 1.606 to read as follows:

§ 1.606 Interference between an application and a patent; subject matter of the interference.

Before an interference is declared between an application and an unexpired patent, an examiner must determine that there is interfering subject matter claimed in the application and the patent which is patentable to the applicant subject to a judgment in the interference. The interfering subject matter will be defined by one or more counts. The application must contain, or be amended to contain, at least one claim that is patentable over the prior art and corresponds to each count. The claim in the application need not be, and most often will not be, identical to a claim in the patent. All claims in the application and patent which define the same patentable invention as a count shall be designated to correspond to the count.

§ 1.609 [Removed and Reserved]

4. Remove and reserve § 1.609.

5. Amend § 1.671 by revising paragraph (a) to read as follows:

§ 1.671 Evidence must comply with rules.

(a) Evidence consists of affidavits, transcripts of depositions, documents and things.

* * * * *

§§ 1.682, 1.683, and 1.688 [Removed and Reserved]

6. Remove and reserve § 1.682, 1.683, and 1.688.

Dated: September 13, 2000.

Q. Todd Dickinson,

Under Secretary of Commerce for Intellectual Property and Director of the United States Patent and Trademark Office.

[FR Doc. 00–24120 Filed 9–19–00; 8:45 am]

BILLING CODE 3510–16–P

ENVIRONMENTAL PROTECTION AGENCY

40 CFR Part 52

[TN–233–1–20021a; FRL–6872–2]

Approval and Promulgation of the Implementation Plan for the Shelby County, Tennessee Lead Nonattainment Area

AGENCY: Environmental Protection Agency (EPA).

ACTION: Direct final rule.

SUMMARY: EPA is approving the lead state implementation plan (SIP) for the Shelby County, Tennessee, lead nonattainment area. The State of Tennessee submitted the lead SIP on March 17, 2000, pursuant to sections 110(a)(2) and 172(c) of the Clean Air Act (CAA). This SIP submittal meets all EPA and CAA requirements for lead SIPs.

DATES: This direct final rule is effective November 20, 2000 without further notice, unless EPA receives adverse comment by October 20, 2000. If adverse comments are received, EPA will publish a timely withdrawal of the direct final rule in the **Federal Register** and inform the public that the rule will not take effect.

ADDRESSES: Comments on this action should be addressed to Kimberly Bingham, EPA Region 4, Air Planning Branch, Sam Nunn Atlanta Federal Center, 61 Forsyth Street, SW, Atlanta, Georgia 30303–3104.

Copies of all materials considered in this rulemaking may be examined during normal business hours at the following locations: EPA Region 4, Sam Nunn Atlanta Federal Center, 61 Forsyth Street, SW, Atlanta, Georgia 30303–3104, Tennessee Air Pollution Control Board, 9th Floor, L & C Annex, 401 Church Street, Nashville, Tennessee 37243–1531.

FOR FURTHER INFORMATION CONTACT: Kimberly Bingham, Air, Pesticides and Toxics Management Division, Region 4, Environmental Protection Agency at (404) 562–9038 or bingham.kimberly@epa.gov.

SUPPLEMENTARY INFORMATION:

I. Background—Lead SIP

Section 107(d)(5) of the CAA provides for areas to be designated as attainment, nonattainment, or unclassifiable with respect to the lead national ambient air quality standard (NAAQS). Governors are required to submit recommended designations for areas within their states. When an area is designated nonattainment, the state must prepare and submit a SIP that meets the requirements of sections 110(a)(2) and 172(c) of the CAA demonstrating how the area will be brought into attainment. The EPA designated the portion of Memphis in Shelby County, Tennessee, around the Refined Metals Corporation secondary lead smelter as a lead nonattainment area on January 6, 1992. This nonattainment designation was based on lead NAAQS violations recorded by monitors near the Refined Metals Corporation facility in 1990 and 1991.

On December 1, 1994, the Memphis and Shelby County Health Department (MSCHD) through the Tennessee Department of Environment and Conservation submitted a SIP to bring the Shelby County lead nonattainment area into attainment with the lead NAAQS. EPA found the December 1, 1994, SIP to be inadequate because it did not meet all of the requirements of section 172(c) of the CAA. EPA requested that MSCHD make the necessary corrections and submit supplemental information to address the deficiencies. Due to several violations of the lead NAAQS in 1996, Region 4 requested that MSCHD also submit an analysis of the control measures in place at the facility to ensure that they were adequate to prevent future violations. The SIP also contained language in the lead chapter that granted Director's discretion to change emission limits at any given time. Because a requirement of the CAA is that the submittal includes specific enforceable emission limits, the Region could not approve the submittal with the Director's discretion clause. The EPA conducted an inspection of the Refined Metals facility and found that the violations were not a result of an inadequate SIP. Instead, they were due to compliance issues (*i.e.,* poor housekeeping methods). The MSCHD submitted additional information to demonstrate that the controls in place would prevent future violations and met CAA requirements. The Region decided to conditionally approve this submittal contingent on the State removing the Director's discretion language from their lead rule.

During the second quarter of 1998, a violation of the lead NAAQS occurred in the Shelby County nonattainment area. Subsequently, the MSCHD issued a Notice of Violation giving Refined Metals, Inc. options to surrender all of its permits or pay a fine and conduct extensive remodeling of the facility. Refined Metals, Inc. chose to surrender all of its permits and shutdown permanently on December 22, 1998. As a result, the 1994 submittal was no longer applicable and MSCHD withdrew and replaced it with a new submittal dated March 17, 2000.

II. Analysis of the State Submittal

The lead SIP for Shelby County, Tennessee was reviewed using the criteria established by the CAA in sections 110(a)(2) and 172(c). Section 110(a)(2) contains general requirements for all SIPs, and section 172(c) of the CAA contains specific provisions applicable to areas designated as nonattainment for any of the NAAQS. EPA also issued a General Preamble describing how we will review SIPs and SIP revisions submitted under Title I of the CAA, including those state submittals containing lead nonattainment area SIP requirements (see generally 57 FR 13498 (April 16, 1992) and 57 FR 18070 (April 28, 1992)). Because the EPA is describing its interpretations here only in broad terms, the reader should refer to the General Preamble for a more detailed discussion of the interpretations of Title I advanced in today's approval and the supporting rationale (57 FR 13549, April 16, 1992).

A. Attainment Demonstration

Section 192(a) of the CAA requires that SIPs must provide for attainment of the lead NAAQS as expeditiously as practicable but not later than five years from the date of an area's nonattainment designation. The lead nonattainment designation for the Shelby County area was effective on January 6, 1992; therefore, the latest attainment date permissible by the statute was January 6, 1997. The Shelby County area did not meet this date because of violations in 1996 and 1998. Enforcement actions were taken against Refined Metals Corporation that led to the owners of the facility surrendering the operating permits and permanently closing the facility. Since this action, the air quality monitor in the Shelby County area has recorded seven consecutive quarters of air quality data that meet the lead NAAQS for the years 1998, 1999, and to date for 2000. MSCHD can request redesignation to attainment after the area has recorded eight consecutive quarters of air quality data that meet the lead NAAQS.

The Refined Metals Corporation is the sole source of the lead emissions in the Shelby County nonattainment area. Since the facility ceased operation, the improvement in air quality resulting in seven consecutive quarters of clean air quality data indicates that the area will likely continue to meet the lead NAAQS, and therefore, the SIP is adequate for attainment of the lead NAAQS.

B. Emissions Inventory

Section 172(c)(3) of the CAA requires that nonattainment plan provisions include a comprehensive, accurate, current inventory of actual emissions from all sources of relevant pollutants in the nonattainment area. Because it is necessary to support an area's attainment demonstration, the emission inventory must be included with the SIP submission. Since the Refined Metals Corporation, the sole source of lead emissions in the Shelby County area, ceased operation, there are no permitted process emissions from the facility or in the nonattainment area. Therefore, this requirement is no longer applicable.

C. Reasonably Available Control Measures (RACM) (Including Reasonably Available Control Technology (RACT))

States with lead nonattainment areas must submit provisions to assure that RACM (including RACT) is implemented (see section 172(c)(1)). The owner of the Refined Metals facility is currently decontaminating and demolishing all of the buildings at that location. To ensure that there are no violations of the lead NAAQS during the decontamination and demolition of the facility, control measures were included in the Building Decontamination and Demolition Plan (BDDP) dated October 1, 1999. BDDPs are required by the Resource Conservation and Recovery Act (RCRA), and must ensure that human health and the environment are protected during the cleanup of any facility. This includes making sure that there are no violations of the lead NAAQS. EPA has determined that all of the control measures included in the BDDP satisfy RCRA and CAA requirements.

D. Other Measures Including Emission Limitations and Timetables

Pursuant to 172(c)(6) of the CAA, all nonattainment SIPs must contain enforceable emission limitations, other control measures, and schedules and timetables for compliance. Since the Refined Metals Corporation, the sole source of lead emissions in the Shelby County area, ceased operation, there are no permitted process emissions from the facility or any other source. Also, requiring other control measures or a schedule for compliance is not necessary because the Shelby County area has been meeting the lead NAAQS since the facility ceased operation. Therefore, these requirements are no longer applicable.

E. Enforceability

All measures and other elements in the SIP must be enforceable by the State and EPA (see sections 172(c)(6), 110(a)(2)(A) and 57 FR 13556). The EPA criteria addressing the enforceability of SIPs and SIP revisions are stated in a September 23, 1987, memorandum (with attachments) from J. Craig Potter, Assistant Administrator for Air and Radiation, *et al.* (see 57 FR 13541). Nonattainment area plan provisions must also contain a program that provides for enforcement of the control measures and other elements in the SIP (see section 110(a)(2)(C)). The MSCHD has the enforcement authority to implement and enforce this control strategy for lead under the federally approved provisions of the Memphis and Shelby County code, section 1200–3–22–.03(1).

F. Computer Modeling

Section 110(a)(2)(K) of the CAA requires the use of air quality modeling to predict the effect of the control strategy on ambient air quality from any emissions of an air pollutant for which a NAAQS has been established. Since the Refined Metals Corporation, the sole source of lead emissions in the Shelby County area, ceased operation, there are no permitted process emissions coming from the facility. Therefore, this requirement is no longer applicable.

G. Reasonable Further Progress (RFP)

The SIP must provide for RFP, defined in section 171(1) of the CAA as such additional reductions in emissions of the relevant air pollutant as are required by section 172(c)(2), or may reasonably be required by the Administrator to ensure attainment of the applicable NAAQS by the applicable date.

The improvement in air quality since the facility shutdown, resulting in seven consecutive quarters of clean air quality data, demonstrates that progress has been made in the Shelby County area. Moreover, additional incremental reductions in emissions cannot be obtained because there are not any process emissions coming from the Refined Metals facility.

H. New Source Review (NSR)

Section 172(c)(5)of the CAA requires that the submittal include a permit program for the construction and operation of new and modified major stationary sources. The federally approved Rule 16–77 of the Memphis and Shelby County Air Pollution Control Regulations identifies the current specific permitting requirements for nonattainment areas in the Memphis and Shelby County area. This rule meets the requirements of the CAA.

I. Contingency Measures

As provided in section 172(c)(9) of the CAA, all nonattainment area SIPs that demonstrate attainment must include contingency measures. Contingency measures should consist of other available measures that are not part of the area's control strategy. These measures must take effect without further action by the state or EPA, upon a determination that the area has failed to meet RFP or attain the lead NAAQS by the applicable attainment date.

If a violation of the lead NAAQS occurs in the Shelby County area, MSCHD will proceed immediately to take an appropriate enforcement action for that violation. EPA has determined this requirement in the MSCHD SIP satisfies the contingency measure provisions of the CAA.

The EPA is approving the lead SIP for Shelby County, Tennessee because it meets the requirements set forth in section 110(a)(2) and 172(c) of the CAA.

III. Final Action

EPA is approving the lead SIP for the Shelby County, Tennessee lead nonattainment area because the submittal meets the requirements of the CAA as discussed in this document. The EPA is publishing this rule without a prior proposal because the Agency views this as a noncontroversial submittal and anticipates no adverse comments. However, in the proposed rules section of this **Federal Register** publication, EPA is publishing a separate document that will serve as the proposal to approve the SIP revision should adverse comments are filed. This rule will be effective November 20, 2000 without further notice unless the Agency receives adverse comments by October 20, 2000.

If the EPA receives such comments, then EPA will publish a document withdrawing the final rule and informing the public that the rule will not take effect. All public comments received will then be addressed in a subsequent final rule based on the proposed rule. The EPA will not

institute a second comment period. Parties interested in commenting should do so at this time. If no such comments are received, the public is advised that this rule will be effective on November 20, 2000 and no further action will be taken on the proposed rule.

IV. Administrative Requirements

Under Executive Order 12866 (58 FR 51735, October 4, 1993), this action is not a ''significant regulatory action'' and therefore is not subject to review by the Office of Management and Budget. This action merely approves state law as meeting federal requirements and imposes no additional requirements beyond those imposed by state law. Accordingly, the Administrator certifies that this rule will not have a significant economic impact on a substantial number of small entities under the Regulatory Flexibility Act (5 U.S.C. 601 *et seq.*). Because this rule approves pre-existing requirements under state law and does not impose any additional enforceable duty beyond that required by state law, it does not contain any unfunded mandate or significantly or uniquely affect small governments, as described in the Unfunded Mandates Reform Act of 1995 (Public Law 104–4). For the same reason, this rule also does not significantly or uniquely affect the communities of tribal governments, as specified by Executive Order 13084 (63 FR 27655, May 10, 1998). This rule will not have substantial direct effects on the States, on the relationship between the national government and the States, or on the distribution of power and responsibilities among the various levels of government, as specified in Executive Order 13132 (64 FR 43255, August 10, 1999), because it merely approves a state rule implementing a federal standard, and does not alter the relationship or the distribution of power and responsibilities established in the Clean Air Act. This rule also is not subject to Executive Order 13045 (62 FR 19885, April 23, 1997), because it is not economically significant.

In reviewing SIP submissions, EPA's role is to approve state choices, provided that they meet the criteria of the Clean Air Act. In this context, in the absence of a prior existing requirement for the State to use voluntary consensus standards (VCS), EPA has no authority to disapprove a SIP submission for failure to use VCS. It would thus be inconsistent with applicable law for EPA, when it reviews a SIP submission, to use VCS in place of a SIP submission that otherwise satisfies the provisions of the Clean Air Act. Thus, the requirements of section 12(d) of the National Technology Transfer and Advancement Act of 1995 (15 U.S.C. 272 note) do not apply. As required by section 3 of Executive Order 12988 (61 FR 4729, February 7, 1996), in issuing this rule, EPA has taken the necessary steps to eliminate drafting errors and ambiguity, minimize potential litigation, and provide a clear legal standard for affected conduct. EPA has complied with Executive Order 12630 (53 FR 8859, March 15, 1988) by examining the takings implications of the rule in accordance with the ''Attorney General's Supplemental Guidelines for the Evaluation of Risk and Avoidance of Unanticipated Takings'' issued under the executive order. This rule does not impose an information collection burden under the provisions of the Paperwork Reduction Act of 1995 (44 U.S.C. 3501 *et seq.*).

The Congressional Review Act, 5 U.S.C. 801 *et seq.*, as added by the Small Business Regulatory Enforcement Fairness Act of 1996, generally provides that before a rule may take effect, the agency promulgating the rule must submit a rule report, which includes a copy of the rule, to each House of the Congress and to the Comptroller General of the United States. EPA will submit a report containing this rule and other required information to the U.S. Senate, the U.S. House of Representatives, and the Comptroller General of the United States prior to publication of the rule in the **Federal Register**. A major rule cannot take effect until 60 days after it is published in the **Federal Register**. This action is not a ''major rule'' as defined by 5 U.S.C. 804(2).

Under section 307(b)(1) of the Clean Air Act, petitions for judicial review of this action must be filed in the United States Court of Appeals for the appropriate circuit by November 20, 2000. Filing a petition for reconsideration by the Administrator of this final rule does not affect the finality of this rule for the purposes of judicial review nor does it extend the time within which a petition for judicial review may be filed, and will not postpone the effectiveness of such rule or action. This action may not be challenged later in proceedings to enforce its requirements. (See section 307(b)(2).)

List of Subjects in 40 CFR Part 52

Environmental protection, Air pollution control, Intergovernmental relation, Lead, Reporting and recordkeeping requirements.

Dated: September 5, 2000.

Mike V. Peyton,

Acting Regional Administrator, Region 4.

Chapter I, title 40, *Code of Federal Regulations*, is amended as follows:

PART 52—[AMENDED]

1. The authority citation for part 52 continues to read as follows:

Authority: 42 U.S.C. 7401 *et seq.*

Subpart RR—Tennessee

2. Section 52.2220(d) is amended by adding at the end of the table a new entry for the Refined Metals, Inc. facility to read as follows:

§ 52.2220 Identification of plan.

* * * * *

(d) EPA-approved State Source specific requirements.

EPA-APPROVED TENNESSEE SOURCE-SPECIFIC REQUIREMENTS

Name of source	Permit No.	State effective date	EPA approval date	Explanation
* *	*	*	*	*
Refined Metals, Inc.	n/a		September 20, 2000.	

[FR Doc. 00–24042 Filed 9–19–00; 8:45 am]
BILLING CODE 6560–50–P

ENVIRONMENTAL PROTECTION AGENCY

40 CFR Part 52

[AL–051–200026(a); FRL–6872–4]

Approval and Promulgation of Implementation Plans: Revision to the Alabama Department of Environmental Management (ADEM) Administrative Code for the Air Pollution Control Program

AGENCY: Environmental Protection Agency (EPA).

ACTION: Direct final rule.

SUMMARY: The EPA is approving revisions to the Alabama Department of Environmental Management's (ADEM) Administrative Code submitted on January 10, 2000, by the State of Alabama. The revisions comply with the regulations set forth in the Clean Air Act (CAA). Included in this document are revisions to Chapter 335–3–14—Air Permits. ADEM is revising this rule to delete outdated accommodative state implementation plan (SIP) rules.

DATES: This direct final rule is effective November 20, 2000 without further notice, unless EPA receives adverse comment by October 20, 2000. If adverse comment is received, EPA will publish a timely withdrawal of the direct final rule in the **Federal Register** and inform the public that the rule will not take effect.

ADDRESSES: All comments should be addressed to: Kimberly Bingham at the EPA, Region 4 Air Planning Branch, 61 Forsyth Street, SW, Atlanta, Georgia 30303.

Copies of documents relative to this action are available at the following addresses for inspection during normal business hours:

Air and Radiation Docket and Information Center (Air Docket 6102), U.S. Environmental Protection Agency, 401 M Street, SW, Washington, DC 20460.

Environmental Protection Agency, Region 4, Air Planning Branch, 61 Forsyth Street, SW, Atlanta, Georgia 30303–8960.

Alabama Department of Environmental Management, 400 Coliseum Boulevard, Montgomery, Alabama 36110–2059.

FOR FURTHER INFORMATION CONTACT: Kimberly Bingham, Regulatory Planning Section, Air Planning Branch, Air, Pesticides and Toxics Management Division, Region 4, Environmental Protection Agency, Atlanta Federal Center, 61 Forsyth Street, SW, Atlanta, Georgia 30303. The telephone number is (404) 562–9038. Ms. Bingham can also be reached via electronic mail at bingham.kimberly@epa.gov.

SUPPLEMENTARY INFORMATION:

I. Analysis of State's Submittal

On January 10, 2000, the State of Alabama through ADEM submitted revisions to Chapter 335–3–14—Air Permits. Rule 335–3–14.05(4) was amended to remove outdated nonattainment new source review rules also referred to as ''accommodative SIP'' language. An accommodative SIP provides for new source growth without emission offsets by requiring reasonably available control technologies on existing 100 ton per year Group I and Group II sources that emit volatile organic compounds in areas not normally required to have controls (*i.e.*, attainment and unclassified areas). ADEM removed most of the accommodative language in a previous SIP which was approved by EPA on December 19, 1986 (see 51 FR 45469, December 19, 1986 for a more detailed discussion).

ADEM deleted the following subparagraphs under rule 335–3–14–.05(4) which were a part of the accommodative SIP language:

- Subparagraphs (a), (b), and (e) were marked reserved.
- Subparagraph (c)(1) contained the following language, ''A person proposing to construct or make a major modification to a major facility subject to the provisions of this Rule, located in a nonurban nonattainment area (less than 200,000 population), shall be required to install LAER but shall not be required to obtain emission offsets as specified herein.''
- Subparagraph (c)(2) contained the following language, ''The provisions of subparagraph (c) of this paragraph are applicable to volatile organic compound sources only.''

These revisions comply with CAA requirements.

II. Final Action

EPA is approving the aforementioned change to the State of Alabama's SIP because it is consistent with the CAA and EPA policy. The EPA is publishing this rule without a prior proposal because the Agency views this as a noncontroversial submittal and anticipates no adverse comments. However, in the proposed rules section of this **Federal Register** publication, EPA is publishing a separate document that will serve as the proposal to approve the SIP revision if adverse comments are filed. This rule will be effective November 20, 2000 without further notice unless the Agency receives adverse comments by October 20, 2000.

If the EPA receives such comments, then EPA will publish a document withdrawing the final rule and informing the public that the rule will not take effect. All public comments received will then be addressed in a subsequent final rule based on the proposed rule. The EPA will not institute a second comment period. Parties interested in commenting should do so at this time. If no such comments are received, the public is advised that this rule will be effective on November 20, 2000 and no further action will be taken on the proposed rule.

IV. Administrative Requirements

Under Executive Order 12866 (58 FR 51735, October 4, 1993), this action is not a ''significant regulatory action'' and therefore is not subject to review by the Office of Management and Budget. This action merely approves state law as meeting federal requirements and imposes no additional requirements beyond those imposed by state law. Accordingly, the Administrator certifies that this rule will not have a significant economic impact on a substantial number of small entities under the Regulatory Flexibility Act (5 U.S.C. 601 *et seq.*). Because this rule approves pre-existing requirements under state law and does not impose any additional enforceable duty beyond that required by state law, it does not contain any unfunded mandate or significantly or uniquely affect small governments, as described in the Unfunded Mandates Reform Act of 1995 (Public Law 104–4). For the same reason, this rule also does not significantly or uniquely affect the communities of tribal governments, as specified by Executive Order 13084 (63 FR 27655, May 10, 1998). This rule will not have substantial direct effects on the States, on the relationship between the national government and the States, or on the distribution of power and responsibilities among the various levels of government, as specified in Executive Order 13132 (64 FR 43255, August 10, 1999), because it merely approves a state rule implementing a federal standard, and does not alter the relationship or the distribution of power and responsibilities established in the Clean Air Act. This rule also is not subject to Executive Order 13045 (62 FR 19885, April 23, 1997), because it is not economically significant.

In reviewing SIP submissions, EPA's role is to approve state choices, provided that they meet the criteria of the Clean Air Act. In this context, in the absence of a prior existing requirement for the State to use voluntary consensus standards (VCS), EPA has no authority to disapprove a SIP submission for failure to use VCS. It would thus be inconsistent with applicable law for EPA, when it reviews a SIP submission, to use VCS in place of a SIP submission that otherwise satisfies the provisions of the Clean Air Act. Thus, the requirements of section 12(d) of the National Technology Transfer and Advancement Act of 1995 (15 U.S.C. 272 note) do not apply. As required by section 3 of Executive Order 12988 (61 FR 4729, February 7, 1996), in issuing this rule, EPA has taken the necessary steps to eliminate drafting errors and ambiguity, minimize potential litigation, and provide a clear legal standard for affected conduct. EPA has complied with Executive Order 12630 (53 FR 8859, March 15, 1988) by examining the takings implications of the rule in accordance with the ''Attorney General's Supplemental Guidelines for the Evaluation of Risk and Avoidance of Unanticipated Takings'' issued under the executive order. This rule does not impose an information collection burden under the provisions of the Paperwork Reduction Act of 1995 (44 U.S.C. 3501 *et seq.*).

The Congressional Review Act, 5 U.S.C. 801 *et seq.*, as added by the Small Business Regulatory Enforcement Fairness Act of 1996, generally provides that before a rule may take effect, the agency promulgating the rule must submit a rule report, which includes a copy of the rule, to each House of the Congress and to the Comptroller General of the United States. EPA will submit a report containing this rule and other required information to the U.S. Senate, the U.S. House of Representatives, and the Comptroller General of the United States prior to publication of the rule in the **Federal Register**. A major rule cannot take effect until 60 days after it is published in the **Federal Register.** This action is not a ''major rule'' as defined by 5 U.S.C. 804(2).

Under section 307(b)(1) of the Clean Air Act, petitions for judicial review of this action must be filed in the United States Court of Appeals for the appropriate circuit by November 20, 2000. Filing a petition for reconsideration by the Administrator of this final rule does not affect the finality of this rule for the purposes of judicial review nor does it extend the time within which a petition for judicial review may be filed, and will not postpone the effectiveness of such rule or action. This action may not be challenged later in proceedings to enforce its requirements. (See section 307(b)(2).)

List of Subjects in 40 CFR Part 52

Environmental protection, Air pollution control, Intergovernmental relation, Lead, Reporting and recordkeeping requirements.

Dated: September 5, 2000.

Mike V. Peyton,

Acting Regional Administrator, Region 4.

Chapter I, title 40, *Code of Federal Regulations*, is amended as follows:

PART 52—[AMENDED]

1. The authority citation for part 52 continues to read as follows:

Authority: 42 U.S.C. 7401 *et seq.*

Subpart B—Alabama

2. Section 52.50 is revising the entry for section 335–3–14.05 in the table in paragraph (c) to read as follows:

§ 52.50 Identification of plan.

* * * * *

(c) EPA approved regulations.

EPA APPROVED ALABAMA REGULATIONS

State citation	Title subject	Adoption date	EPA approval date	Federal Register notice
(1) Chapter No. 335–3–14	(2) Air Permit.			
*	* *	*	* *	*
Section 335–3–1–14–05	Air Permits Authorizing Construction in or Near Non-Attainment Areas.	December 7, 1999	September 20, 2000	65 FR 56798
*	* *	*	* *	*

* * * * *

[FR Doc. 00–24040 Filed 9–19–00; 8:45 am]

BILLING CODE 6560–50–P

ENVIRONMENTAL PROTECTION AGENCY

40 CFR Parts 60, 63, 260, 261, 264, 265, 266, 270, and 271

[FRL–6870–8]

Hazardous Waste Combustion National Emission Standards for Hazardous Air Pollutants (NESHAP) Toolkit; Notice of Availability

AGENCY: Environmental Protection Agency.

ACTION: Availability of new implementation toolkit related to final regulations.

SUMMARY: The Environmental Protection Agency (EPA) is providing notice of the August 10, 2000 release of the Hazardous Waste Combustion NESHAP Toolkit on the Internet. The Toolkit provides implementation guidance and other materials related to the final regulation NESHAP: Final Standards for Hazardous Air Pollutants for Hazardous Waste Combustors (64 FR 52828, September 30, 1999). The purpose of the Toolkit is to assist all interested stakeholders, including the general public, regulators and industry, in understanding the implementation aspects of the new standards and our new approach to permitting the facilities or sources subject to them. The Toolkit's primary focus is on general and process-oriented information and includes: descriptions of Resource Conservation and Recovery Act (RCRA) and Clean Air Act (CAA) permitting requirements and policies, a time line of important compliance dates, a list of affected facilities or sources, links to related websites, a list of RCRA and CAA regulatory contacts, and commonly used acronyms. The Toolkit does not provide guidance on any technical requirements associated with the rule (*e.g.*, test methods, monitoring techniques, etc.).

FOR FURTHER INFORMATION CONTACT: For general information, you can contact the RCRA Hotline at 1–800–424–9346 or TDD 1–800–553–7672 (hearing impaired). In the Washington, D.C. metropolitan area, call 703-412–9810 or TDD 703–412–3323. The RCRA Hotline is open Monday through Friday from 9 a.m. to 6 p.m. Eastern Standard Time. To access the Toolkit, please see our Internet page: *http://www.epa.gov/*

epaoswer/hazwaste/combust/toolkit/toolkit.htm.

For specific information related to the Toolkit, you can contact Ms. Rosemary Workman at 703–308–8725 or *workman.rosemary@epa.gov*. For specific questions related to the final rulemaking for the new standards, you can contact Mr. David Hockey at 703–308–8846 or *hockey.david@epa.gov*. For questions related to the implementation of the new standards for a specific facility or source, please contact either your regional or state RCRA or CAA regulatory officials.

SUPPLEMENTARY INFORMATION: On September 30, 1999, we finalized the National Emission Standards for Hazardous Air Pollutants (NESHAP) for three categories of hazardous waste combustors (HWCs): incinerators, cement kilns and light-weight aggregate kilns (64 FR 52828, September 30, 1999). We promulgated these standards under the joint authority of the CAA and RCRA. Before the final rule went into effect, we regulated air emissions from the three types of HWCs primarily under the authority of section 3004(a) of RCRA. With the release of the final rule, however, we now regulate air emissions from these sources primarily under the CAA. Even though both statutes give us the authority to regulate air emissions, we determined that having standards and permitting requirements in both sets of implementing regulations would be duplicative. For this reason, we used the final rule as a vehicle for changing our approach to permitting air emissions from HWCs. Thus, with one exception, we are now requiring that such emissions be permitted only under title V of the CAA. The exception concerns section 3005(c)(3) of RCRA, which requires that each RCRA permit contain the terms and conditions necessary to protect human health and the environment. Under this provision of RCRA, if a regulatory authority determines that more stringent conditions are necessary to protect human health and environment for a particular facility, then that regulatory authority may impose those conditions in the facility's RCRA permit.

As an Internet-based guidance, the Toolkit is available only through the world wide web. It can be accessed at *http://www.epa.gov/epaoswer/hazwaste/combust/toolkit/toolkit.htm*.

To access other available electronic documents related to the new standards, specifically, or hazardous waste combustion, generally, please see our Internet page: *http://www.epa.gov/epaoswer/hazwaste/combust.htm*.

Dated: September 6, 2000.

Elizabeth A. Cotsworth,

Director, Office of Solid Waste.

[FR Doc. 00–23942 Filed 9–19–00; 8:45 am]

BILLING CODE 6560–50–P

FEDERAL COMMUNICATIONS COMMISSION

47 CFR Part 73

[DA 00–2062; MM Docket No. 00–84; RM–9855; MM Docket 00–85; RM–9868; MM Docket No. 00–86; RM–9869; MM Docket 00–89; RM–9872; MM Docket No. 00–111; RM–9900; MM Docket No. 00–112; RM–9901]

Radio Broadcasting Services; Jacksonville, GA; Las Vegas, NM; Vale, OR; Waynesboro, GA; Fallon, NV; Weiser, OR

AGENCY: Federal Communications Commission.

ACTION: Final rule.

SUMMARY: The Commission allots: (1) Channel 272A to Jacksonville, GA, as its first local aural service, at the request of Clyde and Connie Lee Scott, d/b/a EME Communications, (2) Channel 224A to Las Vegas, NM, as its fifth local commercial FM service, at the request of Sangre de Christo Broadcasting Company, Inc.; (3) Channel 288C to Vale, OR, as its first local aural service, at the request of New West Broadcasting; (4) Channel 225A to Waynesboro, GA, as its third local FM service, at the request of SSR Communications Incorporated; (5) Channel 281C to Fallon, NV, as its third local FM service, at the request of FBB Broadcasting; and (6) Channel 280C1 to Weiser, OR, as its first local aural service, at the request of WE Broadcasting. *See,* 65 FR 3499, June 1, 2000, 65 FR 47370, August 2, 2000. All of the channels can be allotted in compliance with the Commission's minimum distance separation requirements. Channel 272A at Jacksonville, GA, requires a site restriction of 13.5 kilometers (8.4 miles) northwest, at coordinates 31–51–54 NL; 83–06–16 WL, to avoid a short-spacing to Stations WZAT, Channel 271C, Savannah, GA; WBGA, Channel 273C1, Waycross, GA, and WYSC, Channel 274A, McRae, GA. *See* **SUPPLEMENTARY INFORMATION.**

DATES: Effective October 23, 2000.

ADDRESSES: Federal Communications Commission, Washington, D.C. 20554.

FOR FURTHER INFORMATION CONTACT: Leslie K. Shapiro, Mass Media Bureau, (202) 418–2180.

SUPPLEMENTARY INFORMATION: This is a synopsis of the Commission's Report and Order, MM Docket Nos. 00–84, 00–85, 00–86, 00–89, 00–111 and 00–112, adopted August 30, 2000, and released September 8, 2000. The full text of this Commission decision is available for inspection and copying during normal business hours in the FCC Reference Center (Room 239), 445 12th Street, SW, Washington, DC. The complete text of this decision may also be purchased from the Commission's copy contractor, International Transcription Services, Inc., (202) 857–3800, 1231 20th Street, NW, Washington, DC 20036. Channel 224A at Las Vegas, NM, can be allotted without a site restriction, at coordinates 35–36–00 NL; 105–13–00 WL. Channel 288C at Vale, OR, requires a site restriction of 9.6 kilometers (6.0 miles) west, at coordinates 44–00–06 NL; 117–21–32 WL, to avoid a short-spacing to Stations KJOT, Channel 286C, Boise, ID, and KCIX, Channel 290C, Garden City, ID. Channel 225A at Waynesboro, GA, requires a site restriction of 2.0 kilometers (1.3 miles) northeast, at coordinates 33–06–23 NL; 82–00–14 WL, to avoid a short-spacing to Stations WKKZ, Channel 224C2, Dublin, GA, and WEAS–FM, Channel 226C1, Savannah, GA. Channel 281C at Fallon, NV, requires a site restriction of 8.4 kilometers (5.2 miles) east, at coordinates 39–28–30 NL; 118–40–43 WL, to avoid a short-spacing to Stations KODS, Channel 279C1, Carnelian Bay, CA, and Station KDOT, Channel 283C, Reno, NV. Channel 280C1 at Weiser, OR, requires a site restriction of 17.8 kilometers (11 miles) northwest, at coordinates 44–20–39 NL; 117–07–14 WL, to avoid a short-spacing to Stations KSAS–FM, Channel 277C, Caldwell, ID, and KLTB, Channel 282C, Boise, ID. A filing window for these channels will not be opened at this time. Instead, the issue of opening a filing window for these channels will be addressed by the Commission in a subsequent order.

List of Subjects in 47 CFR Part 73

Radio broadcasting.

Part 73 of title 47 of the Code of Federal Regulations is amended as follows:

PART 73—[AMENDED]

1. The authority citation for part 73 continues to read as follows:

Authority: 47 U.S.C. 154, 303, 334, and 336.

§ 73.202 [Amended]

2. Section 73.202(b), the Table of FM Allotments under Georgia, is amended by adding Jacksonville, Channel 272A

and adding Channel 225A at Waynesboro.

3. Section 73.202(b), the Table of FM Allotments under Nevada, is amended by adding Channel 281C at Fallon.

4. Section 73.202(b), the Table of FM Allotments under New Mexico, is amended by adding Channel 224A at Las Vegas.

5. Section 73.202(b), the Table of FM Allotments under Oregon, is amended by adding Vale, Channel 288C, and Weiser, Channel 280C1.

Federal Communications Commission.

John A. Karousos,

Chief, Allocations Branch, Policy and Rules Division, Mass Media Bureau.

[FR Doc. 00–24069 Filed 9–19–00; 8:45 am]

BILLING CODE 6712–01–P

FEDERAL COMMUNICATIONS COMMISSION

47 CFR Part 73

[DA 00–2056; MM Docket No. 99–342; RM–9773, RM–9844]

Radio Broadcasting Services; George West, Pearsall and Victoria, TX

AGENCY: Federal Communications Commission.

ACTION: Final rule.

SUMMARY: At the request of John R. Furr, this substitutes Channel 281C3 for Channel 281A at Pearsall Texas, and modifies the outstanding construction permit (File No. BPH–960926MF) to operation on Channel 281C3. In order to accommodate this upgrade, this document also substitutes Channel 265A for Channel 281A at George West, Texas, and modifies the outstanding construction permit (File No. BPH–19940207MA) to specify operation on Channel 265A. *See* 64 FR 71097, published December 20, 1999. The reference coordinates for Channel 281C1 at Pearsall, Texas, are 28–44–52 and 98–50–13. The reference coordinates for Channel 265A at George West, Texas, are 28–24–26 and 98–10–05. Victoria Radio Works, Ltd., licensee of Station KEPG filed a Request to Withdraw Counterproposal for Channel 265A, Victoria, Texas, which was a one-step upgrade application to specify operation on Channel 265C3 (File No. BPH–19991020AAX).

DATES: Effective October 24, 2000.

ADDRESSES: Federal Communications Commission, Washington, DC 20554.

FOR FURTHER INFORMATION CONTACT: Robert Hayne, Mass Media Bureau (202) 418–2177.

SUPPLEMENTARY INFORMATION: This is a synopsis of the Commission's *Report and Order* in MM Docket No. 99–342, adopted August 30, 2000, and released September 8, 2000. The full text of this decision is available for inspection and copying during normal business hours in the FCC's Reference Information Center at Portals II, CY–A257, 445 12th Street, SW, Washington, D.C. The complete text of this decision may also be purchased from the Commission's copy contractor, International Transcription Service, Inc., (202) 857–3800, 1231 20th Street, NW, Washington, DC 20036.

List of Subjects in 47 CFR Part 73

Radio Broadcasting.

Part 73 of title 47 of the Code of Federal Regulations is amended as follows:

PART 73—[AMENDED]

1. The authority citation for part 73 continues to read as follows:

Authority: 47 U.S.C. 154, 303, 334, 336.

§ 73.202 [Amended]

2. Section 73.202(b), the Table of FM Allotments under Texas, is amended by removing Channel 281A and adding Channel 281C1 at Pearsall.

3. Section 73.202(b), the Table of FM Allotments under Texas, is amended by removing Channel 281A and adding Channel 265A at George West.

Federal Communications Commission.

John A. Karousos,

Chief, Allocations Branch, Policy and Rules Division, Mass Media Bureau.

[FR Doc. 00–24067 Filed 9–19–00; 8:45 am]

BILLING CODE 6712–01–P

FEDERAL COMMUNICATIONS COMMISSION

47 CFR Part 73

[DA 00–2057; MM Docket No. 99–26; RM–9436, RM–9651, RM–9652]

Radio Broadcasting Services; Pitkin, Lake Charles, Moss Bluff and Reeves, LA., and Crystal Beach, Galveston, Missouri City and Rosenberg, TX

AGENCY: Federal Communications Commission.

ACTION: Final rule.

SUMMARY: At the request of Tichenor License Corporation, this document substitutes Channel 285C3 for Channel 285A at Rosenberg, Texas, reallots Channel 285C3 to Missouri City, Texas, and modifies the Station KOVA license to specify operation on Channel 285C3 at Missouri City. To accommodate this upgrade and reallotment, this document substitutes Channel 287A for Channel 285A at Galveston, Texas, reallots Channel 287A to Crystal Beach, Texas, and modifies the Station KLTO license to specify operation on Channel 287A at Crystal Beach. In order to accommodate Channel 287A at Crystal Beach, this document also substitutes Channel 285C3 for Channel 287C2 at Lake Charles, Louisiana, reallots Channel 285C3 to Moss Bluff, Louisiana, and modifies the Station KZWA license to specify operation on Channel 285C3 at Moss Bluff. Finally, this document denies allotment proposals for Channel 285A at Pitkin, Louisiana, and Channel 285A at Reeves, Louisiana. *See* 64 FR 7843, published February 17, 2000. The reference coordinates for the Channel 285C3 allotment at Missouri City, Texas, are 29–33–11 and 95–26–35. The reference coordinates for the Channel 287A allotment at Crystal Beach, Texas, are 29–29–36 and 94–31–33. The reference coordinates for the Channel 285C3 allotment at Moss Bluff, Louisiana, are 30–27–06 and 93–08–39.

DATES: Effective October 23, 2000.

FOR FURTHER INFORMATION CONTACT: Robert Hayne, Mass Media Bureau (202) 418–2177.

SUPPLEMENTARY INFORMATION: This is a synopsis of the Commission's *Report and Order* in MM Docket No. 99–26, adopted August 30, 2000, and released September 8, 2000. The full text of this decision is available for inspection and copying during normal business hours in the FCC's Reference Information Center at Portals II, CY–A257, 445 12th Street, SW, Washington, D.C. The complete text of this decision may also be purchased from the Commission's copy contractor, International Transcription Service, Inc., (202) 857–3800, 1231 20th Street, NW, Washington, D.C. 20036.

List of Subjects in 47 CFR Part 73

Radio Broadcasting.

Part 73 of title 47 of the Code of Federal Regulations is amended as follows:

PART 73—[AMENDED]

1. The authority citation for part 73 continues to read as follows:

Authority: 47 U.S.C. 154, 303, 334, 336.

§ 73.202 [Amended]

2. Section 73.202(b), the Table of FM Allotments under Louisiana, is amended by removing Channel 287C2 at

Lake Charles, and adding Moss Bluff, Channel 285C3.

3. Section 73.202(b), the Table of FM Allotments under Texas, is amended by removing Rosenberg, Channel 285A, and adding Missouri City, Channel 285C3.

4. Section 73.202(b), the Table of FM Allotments under Texas, is amended by removing Channel 285A at Galveston, and adding Channel 287A at Crystal Beach.

Federal Communications Commission.

John A. Karousos,

Chief, Allocations Branch, Policy and Rules Division, Mass Media Bureau.

[FR Doc. 00–24066 Filed 9–19–00; 8:45 am]

BILLING CODE 6712–01–P

FEDERAL COMMUNICATIONS COMMISSION

47 CFR Part 79

[MM Docket No. 99–339; FCC 00–258]

Implementation of Video Description of Video Programming

AGENCY: Federal Communications Commission.

ACTION: Final rule; correction.

SUMMARY: This document corrects the effective date of the final rule which was published in the **Federal Register** of September 11, 2000 (65 FR 54805), regarding the adoption of rules and requirements for television video programming description. The **DATES** section of the final rule is corrected as set forth below.

DATES: Effective April 1, 2002, except for § 79.2 which contains information collections which have not yet been approved by OMB. The Commission will publish a document in the **Federal Register** announcing the effective date of that section.

FOR FURTHER INFORMATION CONTACT: Eric Bash, Policy and Rules Division, Mass Media Bureau (202) 418–2130.

SUPPLEMENTARY INFORMATION: As originally published, the revision of both the part heading and the authority citation did not have an effective date. This document corrects that omission.

Federal Communications Commission.

William F. Caton,

Deputy Secretary.

[FR Doc. 00–24185 Filed 9–19–00; 8:45 am]

BILLING CODE 6712–01–U

DEPARTMENT OF COMMERCE

National Oceanic and Atmospheric Administration

50 CFR Part 622

[Docket No. 940246–4137; I.D. 091100D]

Fisheries of the Caribbean, Gulf of Mexico, and South Atlantic; Snapper-Grouper Fishery off the Southern Atlantic States; Snowy Grouper; Commercial Trip Limit Reduction

AGENCY: National Marine Fisheries Service (NMFS), National Oceanic and Atmospheric Administration (NOAA), Commerce.

ACTION: Trip limit reduction.

SUMMARY: NMFS reduces the commercial trip limit for snowy grouper in the exclusive economic zone (EEZ) off the southern Atlantic states to 300 lb (1,134 kg). This trip limit reduction is necessary to protect the snowy grouper resource.

DATES: Effective 12:01 a.m., local time, October 1, 2000, through December 31, 2000.

FOR FURTHER INFORMATION CONTACT: Peter Eldridge, telephone: 727–570–5305, fax: 727–570–5583, e-mail: Peter.Eldridge@noaa.gov.

SUPPLEMENTARY INFORMATION: The snapper-grouper fishery off the southern Atlantic states is managed under the Fishery Management Plan for the Snapper-Grouper Fishery of the South Atlantic Region (FMP). The FMP was prepared by the South Atlantic Fishery Management Council and is implemented under the authority of the Magnuson-Stevens Fishery Conservation and Management Act by regulations at 50 CFR part 622.

The commercial quota for snowy grouper, one of the species in the snapper-grouper complex, is 344,508 lb (156,266 kg), gutted weight, each fishing year. The fishing year is January 1 through December 31. In accordance with 50 CFR 622.44(c)(3), a commercial trip limit of 2,500 lb (1,134 kg) applies until the quota is reached. When the quota is reached, or is projected to be reached, NMFS is required to reduce the commercial trip limit to 300 lb (136 kg), through the end of the fishing year.

Based on current statistics, NMFS has projected that the commercial quota for snowy grouper will be reached on September 30, 2000. Accordingly, the commercial trip limit for snowy grouper in or from the EEZ off the southern Atlantic states is reduced to 300 lb (136 kg) effective 12:01 a.m., local time, October 1, 2000, through December 31, 2000. During this period, no more than 300 lb (136 kg) of snowy grouper, round weight or gutted weight, may be (1) possessed at any time on board a vessel that has a valid commercial permit for snapper-grouper, or (2) landed, purchased, or sold from such a vessel per day. The possession of a valid commercial permit notwithstanding, the bag and possession limits apply when a vessel is operating as a charter vessel or headboat. A charter vessel with a commercial vessel permit is considered to be operating as a charter vessel when it carries a passenger who pays a fee or when there are more than three persons aboard, including operator and crew. A headboat with a commercial vessel permit is considered to be operating as a headboat when it carries a passenger who pays a fee or when there are more persons aboard than the number of crew specified in the vessel's Certificate of Inspection.

Classification

This action is taken under 50 CFR 622.43(a) and 622.44(c) and is exempt from Office of Management and Budget review under Executive Order 12866.

Authority: 16 U.S.C. 1801 *et seq.*

Dated: September 15, 2000.

Bruce C. Morehead,

Acting Director, Office of Sustainable Fisheries, National Marine Fisheries Service.

[FR Doc. 00–24158 Filed 9–15–00; 2:12 pm]

BILLING CODE 3510–22–S

DEPARTMENT OF COMMERCE

National Oceanic and Atmospheric Administration

50 CFR Part 660

[Docket No. 99122347-9347-01; I.D. 090700A]

Fisheries off West Coast States and in the Western Pacific; Pacific Coast Groundfish Fishery; End of the Primary Season and Resumption of Trip Limits for the Shore-based Fishery for Pacific Whiting

AGENCY: National Marine Fisheries Service (NMFS), National Oceanic and Atmospheric Administration (NOAA), Commerce.

ACTION: Fishing restrictions; request for comments.

SUMMARY: NMFS announces the end of the 2000 primary season for the shore-based fishery for Pacific whiting (whiting) and resumption of per-trip limits at 6 p.m local time (l.t.) September 15, 2000, because the

allocation is projected to be reached. This action is intended to keep the harvest of whiting at the 2000 allocation levels.

DATES: Effective from 6 p.m l.t. September 15, 2000, until the effective date of the 2001 specification and management measures for the Pacific Coast groundfish fishery which will be published in the **Federal Register**, unless modified, superseded or rescinded. Comments will be accepted through October 5, 2000.

ADDRESSES: Submit comments to William Stelle, Jr., Administrator, Northwest Region (Regional Administrator), NMFS, 7600 Sand Point Way NE., Seattle, WA 98115-0070; or Rebecca Lent, Regional Administrator, Southwest Region, NMFS, 501 West Ocean Blvd., Suite 4200, Long Beach, CA 90802-4213.

FOR FURTHER INFORMATION CONTACT: Becky Renko at 206-526-6110.

SUPPLEMENTARY INFORMATION: This action is authorized by regulations implementing the Pacific Coast Groundfish Fishery Management Plan (FMP), which governs the groundfish fishery off Washington, Oregon, and California. The levels of allowable biological catch (ABC), the optimum yield (OY), and the commercial OY (the OY minus the tribal allocation) for U.S. harvests of Pacific whiting were announced in the Pacific Coast groundfish annual specifications and management measures (annual management measures) that were published on January 4, 2000, in the **Federal Register** (65 FR 221). For the year 2000 the whiting ABC and OY are 232,000 mt (mt) and the commercial OY is 199,500 mt. Regulations at 50 CFR 660.323(a)(4) divide the commercial OY into separate allocations for the catcher/processor, mothership, and shore-based sectors of the whiting fishery. The 2000 allocations, based on the 2000 commercial OY, are 67,830 mt (34 percent) for the catcher/processor sector, 47,880 mt (24 percent) for the mothership sector, and 83,790 mt (42 percent) for the shore-based sector.

When each sector's allocation is reached, the primary season for that sector is ended. The catcher/processor sector is composed of vessels that harvest and process whiting. The mothership sector is composed of catcher vessels that harvest whiting and mothership vessels that process whiting. The shore-based sector is composed of vessels that harvest whiting for delivery to land-based processors. The regulations at 50 CFR 600.323 (a)(3)(i) describe the primary season for the shore-based sector as the period(s) when the large-scale target fishery is conducted (when trip limits under § 660.323(b) are not in effect). Before and after the primary seasons, per-trip limits are in effect for whiting.

The best available information on September 11, 2000, indicates that 77,746 mt had been taken through September 9, 2000, and that the 83,790 mt shore-based allocation would be reached by 6 p.m. l.t. on September 15, 2000. This **Federal Register** document announces the date that the primary season for the shore-based sector ends, and that per-trip limits are imposed. This limit is intended to accommodate small bait and fresh fish markets, and bycatch in other fisheries. To minimize incidental catch of chinook salmon by vessels fishing inside of 100 fm (183 m) in the Eureka area, at any time during a fishing trip, a limit of 10,000-lb (4,536 kg) of whiting is in effect year-round (unless landings of whiting are prohibited).

NMFS Action

For the reasons stated here, and in accordance with the regulations at 50 CFR 660.323(a)(4)(iii)(C), NMFS herein announces:

Effective 6 p.m. l.t. on September 15, 2000, no more than 20,000-lb (9,072 kg) of whiting may be taken and retained, possessed or landed by a catcher vessel participating in the shore-based sector of the whiting fishery. If a vessel fishes shoreward of the 100 fm (183 m) contour in the Eureka area (43° - 40° 30' N. lat.) at any time during a fishing trip, the 10,000-lb (4,536 kg) trip limit applies, as announced in the annual management measures at paragraph IV, B (3)(c)(ii).

Classification

This action is authorized by the regulations implementing the FMP. The determination to take this action is based on the most recent data available. The aggregate data upon which the determination is based are available for public inspection at the Office of the Regional Administrator (see **ADDRESSES**) during business hours. This action is taken under the authority of 50 CFR 660.323(a)(4)(iii)(C) and is exempt from review under Executive Order 12866.

Authority: 16 U.S.C. 1801 *et seq.*

Dated: September 14, 2000.

Bruce C. Morehead,

Acting Director, Office of Sustainable Fisheries, National Marine Fisheries Service.

[FR Doc. 00–24062 Filed 9–14–00; 4:37 pm]

BILLING CODE 3510–22–S

Proposed Rules

Federal Register
Vol. 65, No. 183
Wednesday, September 20, 2000

This section of the FEDERAL REGISTER contains notices to the public of the proposed issuance of rules and regulations. The purpose of these notices is to give interested persons an opportunity to participate in the rule making prior to the adoption of the final rules.

DEPARTMENT OF AGRICULTURE

Animal and Plant Health Inspection Service

7 CFR Part 319

[Docket No. 98–103–1]

Importation of Artificially Dwarfed Plants in Growing Media From the People's Republic of China

AGENCY: Animal and Plant Health Inspection Service, USDA.

ACTION: Proposed rule.

SUMMARY: We are proposing to amend our regulations governing the importation of plants and plant products to allow artificially dwarfed (penjing) plants of the genera *Buxus, Ehretia (Carmona), Podocarpus, Sageretia,* and *Serissa* to be imported into the United States from the People's Republic of China in an approved growing medium subject to specified growing, inspection, and certification requirements. We have assessed the pest risks associated with the importation of these artificially dwarfed plants established in growing media and have determined that they may be imported from the People's Republic of China under the conditions proposed without presenting a significant risk of introducing or disseminating dangerous plant pests. This proposed rule would relieve restrictions that currently allow these genera to be imported only as bare-rooted plants.

DATES: We invite you to comment on this docket. We will consider all comments that we receive by November 20, 2000.

ADDRESSES: Please send your comment and three copies to: Docket No. 98–103–1, Regulatory Analysis and Development, PPD, APHIS, Suite 3C03, 4700 River Road, Unit 118, Riverdale, MD 20737–1238.

Please state that your comment refers to Docket No. 98–103–1.

You may read any comments that we receive on this docket in our reading room. The reading room is located in room 1141 of the USDA South Building, 14th Street and Independence Avenue, SW., Washington, DC. Normal reading room hours are 8 a.m. to 4:30 p.m., Monday through Friday, except holidays. To be sure someone is there to help you, please call (202) 690–2817 before coming.

APHIS documents published in the **Federal Register**, and related information, including the names of organizations and individuals who have commented on APHIS dockets, are available on the Internet at http://www.aphis.usda.gov/ppd/rad/webrepor.html.

FOR FURTHER INFORMATION CONTACT: Mr. Wayne D. Burnett, Senior Import Specialist, Phytosanitary Issues Management Team, PPQ, APHIS, 4700 River Road Unit 140, Riverdale, MD 20737–1236; (301) 734–6799.

SUPPLEMENTARY INFORMATION:

Background

The regulations in 7 CFR part 319 prohibit or restrict the importation into the United States of certain plants and plant products to prevent the introduction of plant pests. The regulations contained in ''Subpart—Nursery Stock, Plants, Roots, Bulbs, Seeds, and Other Plant Products,'' §§ 319.37 through 319.37–14 (referred to below as the regulations), restrict, among other things, the importation of living plants, plant parts, and seeds for propagation.

Paragraph § 319.37–8(a) of the regulations requires, with certain exceptions, that plants offered for importation into the United States be free of sand, soil, earth, and other growing media. This requirement is intended to help prevent the introduction of plant pests that might be present in the growing media; the exceptions to the requirement take into account factors that mitigate that plant pest risk. Those exceptions, which are found in paragraphs (b) through (e) of § 319.37–8, consider either the origin of the plants and growing media (paragraph (b)), the nature of the growing media (paragraphs (c) and (d)), or the use of a combination of growing conditions, approved media, inspections, and other requirements (paragraph (e)).

That combination approach found in § 319.37–8(e) provides conditions under which plants from 10 listed taxa may be imported into the United States established in an approved growing medium. In addition to other requirements, § 319.37–8(e):

- Specifies the types of growing media that may be used;
- Requires plants to be grown in accordance with written agreements between the Animal and Plant Health Inspection Service (APHIS) and the plant protection service of the country where the plants are grown and between the foreign plant protection service and the grower;
- Requires the plants to be rooted and grown in a greenhouse that meets certain requirements for pest exclusion and that is used only for plants being grown in compliance with § 319.37–8(e);
- Restricts the source of the seeds or parent plants used to produce the plants, and requires grow-out or treatment of parent plants imported into the exporting country from another country;
- Specifies the sources of water that may be used on the plants, the height of the benches on which the plants must be grown, and the conditions under which the plants must be stored and packaged; and
- Requires that the plants be inspected in the greenhouse and found free of evidence of plant pests no more than 30 days prior to the exportation of the plants.

A phytosanitary certificate issued by the plant protection service of the country in which the plants were grown that declares that the above conditions have been met must accompany the plants at the time of importation. These conditions have been used successfully to mitigate the risk of pest introduction associated with the importation into the United States of approved plants established in growing media.

In 1994, the Animal and Plant Quarantine Service of the People's Republic of China (CAPQ) requested that APHIS consider amending the regulations to allow *Buxus* (Buxaceaea) spp., *Ehretia (Carmona)* (Boraginaceae) spp., *Podocarpus* (Podocarpaceae) spp., *Sageretia (theazans)* (Rhamnaceae) spp., and *Serissa* (Rubiaceae) spp. to be imported into the United States under the conditions set forth in § 319–37–8(e). These species are commonly traded as artificially dwarfed plants (often

referred to as ''penjing'' in China and ''bonsai'' in Japan) and are currently allowed to be imported into the United States only as bare-rooted plants.

The regulations in § 319.37–8(g) provide that we will evaluate a request such as that made by China to allow the importation of additional taxa of plants established in growing media using specific pest risk evaluation standards. We conduct that assessment to determine the plant pest risks associated with each requested plant article and to determine whether or not we will propose to allow the requested plant article established in growing media to be imported into the United States. The pest risk evaluation, the standards for which are set forth in § 319.37–8(g)(1) through (g)(4), involves collecting commodity information, cataloging quarantine pests, conducting individual pest risk assessments, and determining an overall estimation of risk based on a compilation of the component estimates.

After receiving China's request to allow the importation of *Buxus* spp., *Ehretia (Carmona)* spp., *Podocarpus* spp., *Sageretia* spp., and *Serissa* spp. artificially dwarfed (penjing) plants established in growing media, we conducted a pest risk assessment. The assessment is described in a qualitative, pathway-initiated pest risk assessment titled ''Pest Risk Assessments Penjing Plants from China,'' copies of which are available through the person listed under **FOR FURTHER INFORMATION CONTACT.** The pest risk assessment identified arthropod pests, mollusks, nematodes, and fungi as the plant pests most likely to travel with the plant and having the greatest potential for economic damage. Several of the pests were identified in the pest risk assessment for each genus. It is important to note, however, that our pest risk assessment did not include a risk management component, *i.e.,* it did not take into account the mitigative effects of the requirements of § 319.37–8(e), which are designed to establish and maintain a pest-free production environment and ensure the use of pest-free seeds or parent plants.

We have determined that the existing regulations in § 319.37–8(e) that pertain to the importation of plants in growing media would not, by themselves, provide adequate protection against certain pests that may be present in shipments of artificially dwarfed plants from China that are established in growing media. In order to address the pest risks posed by these plants, we have identified additional risk management measures related to propagative cuttings, inspections, treatment, and greenhouse growing to protect against pest introduction. These measures would apply only to the five genera of artificially dwarfed (penjing) plants identified in this proposed rule and would supplement the general requirements that apply to all plants that are imported in growing media under § 319.37–8(e). Descriptions of each of these risk management measures follow. We propose to add these risk management measures to the regulations in § 319.37–8(e).

1. We propose to require that the propagative materials used to produce the artificially dwarfed (penjing) plants enter an approved greenhouse as either seeds, tissue cultures, unrooted cuttings, or rooted cuttings. If the rooted cuttings were grown in soil, the soil would be required to be sampled and found free from, or fumigated for, the nematodes *Paratrophorus* spp., *Tylenchorhynchus crassicaudatus,* and *Tylenchorhynchus leviterinalis* within the 12 months prior to the introduction of the plants into the greenhouse. Before rooted or unrooted cuttings are introduced into the greenhouse, they would be required to be inspected and found free of pests and then treated with a pesticide dip, approved by CAPQ, that would control mites, scale insects, whiteflies, thrips, and fungi. Rooted cuttings would also be required to be treated with a nematicide dip in addition to or in conjunction with the pesticide dip.

This requirement is necessary because the propagative materials used to produce artificially dwarfed plants are derived from mother plants that are not grown within the controlled environment of a greenhouse. Mother plants that are grown outdoors necessarily present a high risk of infestation with nematodes, mites, scale insects, whiteflies, thrips, and fungi that, left untreated, could be spread to plants intended for export. These measures help to ensure that seeds, tissue cultures, unrooted cuttings, or rooted cuttings enter the greenhouse free from such pests. If the rooted cuttings were grown in soil, the soil would have to be sampled and/or fumigated for the nematodes *Paratrophorus* spp., *Tylenchorhynchus crassicaudatus,* and *Tylenchorhynchus leviterinalis* because these nematodes were identified in the ''Pest Risk Assessments Penjing Plants from China'' as presenting, in the absence of mitigation measures, both a high likelihood of introduction and severe economic consequences in the event of an introduction. By sampling and/or fumigating soil for nematodes, and by applying pesticide dips to cuttings, and an additional nematicide dip to rooted cuttings, the risk that plants intended for export could be exposed to the pests identified above is decreased to a negligible level.

2. We propose to require the mother plants from which the artificially dwarfed (penjing) plants are produced to be visually inspected by an APHIS inspector or an inspector of CAPQ and found free of evidence of *Paratrophorus* spp., *Tylenchorhynchus crassicaudatus,* and *Tylenchorhynchus leviterminalis* nematodes and the following species-specific diseases and organisms:

- For *Buxus* spp.: *Guignardia miribelii, Macrophoma ehretia, Meliola buxicola,* and *Puccinia buxi.*
- For *Ehretia* spp.: *Macrophoma ehretia, Phakopsora ehretiae, Pseudocercosporella ehretiae, Pseudocercospora ehretiae-thyrsiflora, Uncinula ehretiae, Uredo ehretiae,* and *Uredo garanbiensis.*
- For *Podocarpus* spp.: *Pestalosphaeria jinggangensis*, *Pestalotia diospyri*, *Phellinus noxius*, and *Sphaerella podocarpi*.
- For *Sageretia* spp.: *Aecidium sageretiae*.
- For *Serissa* spp.: *Melampsora serissicola*.

The above species-specific diseases and organisms were identified in ''Pest Risk Assessments Penjing Plants from China'' as presenting, in the absence of mitigation measures, both a high likelihood of introduction and severe economic consequences in the event of an introduction. Inspectors can visually identify evidence of the presence of any of the above pests in *Buxus* spp., *Ehretia* spp., *Podocarpus* spp., *Sageretia* spp., and *Serissa* spp. This requirement will help to ensure that propagative materials used to produce artificially dwarfed plants enter the greenhouse free from the pests identified above.

3. We propose to require the artificially dwarfed (penjing) plants to have been grown in an approved greenhouse for at least 6 months immediately prior to export. In addition to other phytosanitary procedures required under § 319.37–8(e), the greenhouses would have to have mesh screens with openings no larger than 0.6 mm if the plants had been treated with broad spectrum pesticides at least once a month for the 3 months before shipping. Otherwise, the vents and openings of the greenhouse would have to be covered with mesh screens with openings no larger than 0.2 mm.

We are proposing this requirement because plants that have been grown in an approved greenhouse for 6 months are easier to observe for signs of pest infestations and generally pose less of a

risk of pest infestation due to their controlled environment. Further, we have determined that treatment of the plants with broad spectrum pesticides would decrease the possibility that plants could be infested with pests such as thrips and whiteflies that could otherwise enter the greenhouse through 0.6 mm mesh screens. In order to preclude infestations of those pests without the use of broad spectrum pesticides, vents in the greenhouses would be required to be screened with 0.2 mm mesh.

Based on the pest risk assessment, we have determined that *Buxus* spp., *Ehretia* (*Carmona*) spp., *Podocarpus* spp., *Sageretia* spp., and *Serissa* spp. artificially dwarfed (*penjing*) plants established in growing media could be imported from the People's Republic of China under § 319.37–8(e) and the additional conditions described in this proposed rule without posing any greater plant pest risk than is posed by the importation of these species as bare-rooted plants under § 319.37–8(a). We have also determined that sufficient APHIS resources are available to implement or ensure implementation of the proposed mitigation measures described above, as required under § 319.37–8(g)(4)(ii) of the regulations. Therefore, we propose to amend the regulations to allow *Buxus* spp., *Ehretia* (*Carmona*) spp., *Podocarpus* spp., *Sageretia* spp., and Serissa spp. to be imported in approved growing media subject to those conditions.

In this document, we are also correcting the number of a footnote in § 319.37–8(e).

Fish and Wildlife Service Consultation About Potential Impacts to Endangered Species

APHIS has begun the process of informal consultation with the U.S. Fish and Wildlife Service [1] to assess the potential effects of this proposed rule on endangered or threatened species. We believe that the phytosanitary measures that we have proposed would effectively mitigate the risk of introducing quarantine pests. Therefore, we currently have no reason to believe that there would be effects on any endangered or threatened species associated with this rulemaking. If, during our consultation with the U.S. Fish and Wildlife Service, we determine that this proposal would have effects on endangered or threatened species, we will take appropriate action. Executive Order 12866 and Regulatory Flexibility Act.

This proposed rule has been reviewed under Executive Order 12866. The rule has been determined to be not significant for the purposes of Executive Order 12866 and, therefore, has not been reviewed by the Office of Management and Budget.

This proposal would allow five genera of artificially dwarfed (penjing) plants established in approved growing media to be imported into the United States from the People's Republic of China. The five genera are: *Buxus*, *Ehretia* (carmona), *Podocarpus*, *Sageretia*, and *Serissa*. Plants imported or offered for importation under this program would be required to be presented for inspection at ports of entry with special inspection and treatment facilities, and they would be allowed to enter the United States only under specific conditions designed to prevent the introduction of plant pests.

In China, trained miniature or artificially dwarfed artistic potted plants are called penjing (most Americans are more familiar with the related Japanese term, bonsai). Penjing plants may range from 4 to 60 inches in height. Various styles of potted penjing plants are developed and shaped using specific preferred varieties of trees and other plants most fitted to each particular distinctive style. In China, there are over 160 species of trees, as well as a number of other plants, considered suitable for penjing development. Among the most commonly used are apricot, box, camellia, carmonas, cypress, elm, flowering quince, Fujian tea bush, gingko, hedge, jasmine orange, juniper, maple, ornamental apple, pine, pomegranate, sageretia, serissa, stone yew, and yew podocarpus. Each school of styles uses various combinations of these trees to painstakingly develop the preferred miniature of the parent tree. The objective is to make the penjing plants look as natural, ancient, and picturesque as their large relatives. Growing penjing plants is highly labor intensive and requires much time. Some of these plants have been actively cultivated for hundreds of years by succeeding generations. Penjing plants may be cultivated either from natural trees by cutting, pruning, and shaping, or propagated artificially through seeding, cutting, grafting, and a process known as layering.

The art of miniature tree gardening is a relatively recent phenomenon in the United States. Because it is highly time consuming and very labor intensive, it is practiced by a relatively small number of households. Acquiring the already developed trees can be an expensive investment, with prices ranging between $40 and $10,000 per plant. Value increases with age, regardless of size. Information on the number of households that own penjing plants is not available. However, if the size of the industry is an indicator, then the number of households may be very small. Currently, there are about 400 companies in the United States engaged in the production and distribution of artificially dwarfed plants and related materials, with gross revenue of less than $10 million. Most of these establishments are family owned and operated. Some are plant and seed producers. Other companies are engaged in supplying tools and stands for artificially dwarfed plants. Still others specialize in the production of pots and containers. Certain companies also produce business newsletters and magazines or are otherwise engaged in consulting. Approximately 99 percent of these firms are considered to be small entities.

Artificially dwarfed plants imported into the United States come from the People's Republic of China, Japan, and the Republic of Korea. None of the artificially dwarfed plants are currently imported in growing media. Between 5 and 10 companies import about 20,000 bare-rooted artificially dwarfed plants (about 5,000 from China, 10,000 from Japan, and 5,000 from Korea) annually. To minimize the time between unpotting and repotting these plants so the bare-rooted plants are not damaged, they are shipped by air. Since the cost of air shipment of these plants is based not only on weight but also on space occupied, the cost per unit is quite high. The cost of transporting the plants in a growing media, by ship, would be lower than the current air freight cost.

We expect that adoption of this proposed rule would cause a slight decrease in the costs of business for importers of artificially dwarfed plants. The cost reduction would be mainly from reduced transportation expenses. The ability to import penjing plants in growing media would allow importers to use sea transport without risking the loss of valuable plants. The average savings per importer would depend on the number of penjing plants moved by air versus by sea. Those entities that opt to ship their products by sea could save as much as 50 percent per unit. If these savings were passed on to penjing buyers, consumers could benefit from lower prices.

[1] The U.S. Fish and Wildlife Service has recommended that APHIS enter into formal section 7 consultation, as required by the Endangered Species Act (ESA) for all Federal actions that may affect species listed under the ESA.

Since the price of other ornamental trees and plants is relatively much lower than penjing plants, their competitive advantage over penjing plants would continue to be great even with reduced prices for penjing plants. It is also unlikely that more people would be drawn to purchase these plants as a result of the proposed rule, as unique individual preferences are not changed by such minor cost reductions. Therefore, we expect that overall effects of this proposed rule upon price and competitiveness would be relatively insignificant.

Under these circumstances, the Administrator of the Animal and Plant Health Inspection Service has determined that this action would not have a significant economic impact on a substantial number of small entities.

Executive Order 12988.

This proposed rule has been reviewed under Executive Order 12988, Civil Justice Reform. If this proposed rule is adopted: (1) All State and local laws and regulations that are inconsistent with this rule will be preempted; (2) no retroactive effect will be given to this rule; and (3) administrative proceedings will not be required before parties may file suit in court challenging this rule.

National Environmental Policy Act

APHIS has begun the process of preparing an environmental assessment for this action. When the environmental assessment has been completed, we will publish a notice in the **Federal Register** that announces the availability of the environmental assessment and requests public comment on it. We will also make the environmental assessment available to the public for inspection on the APHIS web site at http://www.aphis.usda.gov/ppd/ead/ppqdocs.html.

The environmental assessment will be prepared in accordance with: (1) The National Environmental Policy Act of 1969 (NEPA), as amended (42 U.S.C. 4321 *et seq.*), (2) regulations of the Council on Environmental Quality for implementing the procedural provisions of NEPA (40 CFR parts 1500–1508), (3) USDA regulations implementing NEPA (7 CFR part 1b), and (4) APHIS' NEPA Implementing Procedures (7 CFR part 372).

Paperwork Reduction Act

This proposed rule contains no new information collection or recordkeeping requirements under the Paperwork Reduction Act of 1995 (44 U.S.C. 3501 *et seq.*).

List of Subjects in 7 CFR Part 319

Bees, Coffee, Cotton, Fruits, Honey, Imports, Logs, Nursery stock, Plant diseases and pests, Quarantine, Reporting and recordkeeping requirements, Rice, Vegetables.

Accordingly, we propose to amend 7 CFR part 319 as follows:

PART 319—FOREIGN QUARANTINE NOTICES

1. The authority citation for part 319 would be revised to read as follows:

Authority: Title IV, Pub. L. 106–224, 114 Stat. 438, 7 U.S.C. 7701–7772; 7 U.S.C. 166 and 450; 21 U.S.C. 136 and 136a; 7 CFR 2.22, 2.80, and 371.3.

2. In § 319.37–8, paragraph (e) would be amended as follows:

a. By revising the introductory text.

b. In paragraph (e)(2)(ix), by removing the word ''and'' at the end of the paragraph.

c. In paragraph (e)(2)(x)(B), by removing the period at the end of the paragraph and adding in its place a semicolon followed by the word ''and''.

d. By adding new paragraph (e)(2)(xi).

§ 319.37–8 Growing media.

* * * * *

(e) A restricted article of any of the following groups of plants may be imported established in an approved growing medium listed in this paragraph if the article meets the conditions of this paragraph and is accompanied by a phytosanitary certificate issued by the plant protection service of the country in which the article was grown that declares that the article meets the conditions of this paragraph: *Alstroemeria*, *Ananas*[10], *Anthurium* Artificially dwarfed (penjing) plants from the People's Republic of China as follows:

Buxus spp., *Ehretia* (*Carmona*) spp., *Podocarpus* spp., *Sageretia* spp., and *Serissa* spp., *Begonia*, *Gloxinia* (= *Sinningia*), *Nidularium*[10], *Peperomia*, Polypodiophyta (=Filicales) (ferns), Rhododendron from Europe, *Saintpaulia*.

* * * * *

(2) * * *

(xi) Artificially dwarfed (penjing) plants of the genera *Buxus*, *Ehretia* (*Carmona*), *Podocarpus*, *Sageretia*, and *Serissa* from the People's Republic of China must also meet the following conditions:

(A) *Propagative cuttings.* The propagative materials used to produce the artificially dwarfed (penjing) plants may enter an approved greenhouse only as seeds, tissue cultures, unrooted cuttings, or rooted cuttings. If the rooted cuttings were grown in soil, the soil must have been sampled and found free from, or fumigated for, the nematodes *Paratrophorus* spp., *Tylenchorhynchus crassicaudatus*, and *Tylenchorhynchus leviterinalis* within the 12 months prior to introduction of the plants into the greenhouse.

(B) *Inspection and treatment.* When any cuttings are introduced into the greenhouse, they must be inspected and found free of plant pests and then treated with a pesticide dip, approved by the Animal and Plant Quarantine Service of the People's Republic of China, that will control mites, scale insects, whiteflies, thrips, and fungi. Rooted cuttings must also be treated with a nematicide dip in addition to or in conjunction with the pesticide dip. The artificially dwarfed (penjing) plants must be propagated from mother plants that have been visually inspected by an APHIS inspector or an inspector of the Animal and Plant Quarantine Service of the People's Republic of China, found free of evidence of *Paratrophorus* spp., *Tylenchorhynchus crassicaudatus*, and *Tylenchorhynchus leviterminalis* nematodes and found free of evidence of the following species-specific diseases and organisms:

(*1*) For *Buxus* spp.: *Guignardia miribelii*, *Macrophoma ehretia*, *Meliola buxicola*, and *Puccinia buxi*.

(*2*) For *Ehretia* spp.: *Macrophoma ehretia*, *Phakopsora ehretiae*, *Pseudocercosporella ehretiae*, *Pseudocercospora ehretiae-thyrsiflora*, *Uncinula ehretiae*, *Uredo ehretiae*, and *Uredo garanbiensis*.

(*3*) For *Podocarpus* spp.: *Pestalosphaeria jinggangensis*, *Pestalotia diospyri*, *Phellinus noxius*, and *Sphaerella podocarpi*.

(*4*) For *Sageretia* spp.: *Aecidium sageretiae*.

(*5*) For *Serissa* spp.: *Melampsora serissicola*.

(C) *Growing.* The artificially dwarfed (penjing) plants must be grown in an approved greenhouse for at least 6 months immediately prior to export.

(D) *Greenhouse screens.* Greenhouses in which the artificially dwarfed (penjing) plants are grown must have mesh screens with openings no larger than 0.6 mm if the plants have been treated, at least once a month for the 3 months before shipping, with broad spectrum pesticides. Otherwise, the vents and openings of an approved greenhouse must be covered with mesh screens with openings no larger than 0.2 mm.

* * * * *

Done in Washington, DC, this 14th day of September 2000.

Bobby R. Acord,

Acting Administrator, Animal and Plant Health Inspection Service.

[FR Doc. 00–24133 Filed 9–19–00; 8:45 am]

BILLING CODE 3410–34–P

[10] These articles are bromeliads, and if imported into Hawaii, bromeliads are subject to postentry quarantine in accordance with § 319.7–7.

DEPARTMENT OF AGRICULTURE

Animal and Plant Health Inspection Service

9 CFR Part 75

[Docket No. 99–074–1]

Equine Viral Arteritis

AGENCY: Animal and Plant Health Inspection Service, USDA.

ACTION: Advance notice of proposed rulemaking and request for comments.

SUMMARY: We are soliciting public comment to help us develop options for an equine viral arteritis regulatory program for horses within the United States. Equine viral arteritis is primarily a respiratory disease of horses. Equine viral arteritis is not widespread in the United States; however, the equine industry within the United States regards the disease as a potentially significant and increasing economic threat. After evaluating public comment on the issues presented in this document, we will determine whether to propose changes to our regulations.

DATES: We invite you to comment on this docket. We will consider all comments that we receive by November 20, 2000.

ADDRESSES: Please send your comment and three copies to: Docket No. 99–074–1, Regulatory Analysis and Development, PPD, APHIS, Suite 3C03, 4700 River Road, Unit 118, Riverdale, MD 20737–1238.

Please state that your comment refers to Docket No. 99–074–1.

You may read any comments that we receive on this docket in our reading room. The reading room is located in room 1141 of the USDA South Building, 14th Street and Independence Avenue, SW., Washington, DC. Normal reading room hours are 8 a.m. to 4:30 p.m., Monday through Friday, except holidays. To be sure someone is there to help you, please call (202) 690–2817 before coming.

APHIS documents published in the **Federal Register**, and related information, including the names of organizations and individuals who have commented on APHIS dockets, are available on the Internet at http://www.aphis.usda.gov/ppd/rad/webrepor.html.

FOR FURTHER INFORMATION CONTACT: Dr. Timothy Cordes, Senior Staff Veterinarian, National Animal Health Programs Staff, VS, APHIS, 4700 River Road Unit 43, Riverdale, MD 20737–1231; (301) 734–3279.

SUPPLEMENTARY INFORMATION:

Background

The regulations in 9 CFR part 75 (referred to below as the regulations) govern the interstate movement of horses, asses, ponies, mules, and zebras that test positive for communicable diseases. The purpose of the regulations is to prevent the interstate spread of communicable diseases in equines. Equine viral arteritis (EVA) is not currently addressed by the regulations.

EVA is an acute, contagious, viral disease characterized by fever, edema, conjunctivitis, nasal discharge, and abortion. Aerosol transmission is the principal means of the spread of infection among horses that are closely congregated in places such as racetracks, shows, and sales. However, the disease can also be spread venereally by infected stallions or infected semen. In fact, infected stallions play a significant role in maintaining EVA infection in horse populations.

When a mare, gelding, or sexually immature colt becomes infected with EVA, the disease will run its course and the animal will eliminate the virus. However, when a stallion becomes infected with EVA, the EVA virus localizes in the stallion's reproductive system, and the stallion becomes a reservoir of the disease. As a consequence, the EVA virus can be shed continuously in the stallion's semen. If a stallion is serologically positive, it has a 50 percent chance of shedding the virus in its semen. Virus isolation can be performed on the stallion's semen to determine whether the stallion is shedding the EVA virus. If the stallion is shedding the EVA virus in its semen, the stallion is considered a shedder. Stallions that are shedders can infect mares during breeding, and infected mares can spread the disease to their foals in utero or to other horses through aerosol transmission.

EVA can pose a number of problems for horse owners, horse breeders, and the equine performance industry. Horses that have EVA antibodies, which can be present due to vaccination against the disease or infection with the EVA virus, can be barred from entering foreign countries for racing or competition purposes. In addition, semen collected from stallions that are shedders is barred from importation into many countries. However, economically, the most damaging aspect of EVA is that the disease can cause abortion in pregnant mares. Abortion rates due to EVA can be as high as 70 percent.

At this time, the Animal and Plant Health Inspection Service (APHIS) does not have a program to control EVA because the disease is not perceived to be widespread in the United States, and confirmed outbreaks are sporadic. However, the equine industry within the United States has requested that APHIS initiate surveillance, control, and possibly eradication of EVA and has indicated a willingness to assist in the implementation of such programs. This document requests public comment on five possible programs to address EVA. Each program is discussed below, and each succeeding program is more restrictive.

Minimal Voluntary Program

The U.S. equine industry would develop, manage, and monitor this program. This program would include an educational program for equine producers and equine practitioners regarding the etiology, treatment, and prevention of EVA. In addition, this program would include a method, to be determined by the equine industry, to identify infected semen and stallions that are shedders. APHIS would not have regulatory involvement with this program.

Voluntary Control Program

The U.S. equine industry would develop, manage, and monitor this program with cooperation from APHIS and individual States. This program would include an educational program for equine producers and equine practitioners regarding the etiology, treatment, and prevention of EVA. In addition, APHIS would quarantine imported stallions at the time of arrival and test them to determine whether they are serologically positive for EVA. APHIS would also test imported equine semen for EVA at the time of arrival. APHIS would note the test results on the import permit accompanying the stallion or semen, release the stallion or semen, and notify animal health regulatory officials in the State of destination of any that were positive. APHIS would recommend that each State determine whether to conduct further testing of positive stallions upon entry into the State.

APHIS would also recommend that each State develop an EVA program that includes testing domestic stallions and semen for EVA and controlling the intrastate movement of EVA-positive stallions, stallions that are shedders, and infected semen. In addition, APHIS would recommend that States make all test results for domestic and imported stallions and semen a matter of public record.

Voluntary and Uniform Control Program

The U.S. equine industry would develop, manage, and monitor this program with cooperation from APHIS and individual States. This program would include an educational program for equine producers and equine practitioners regarding the etiology, treatment, and prevention of EVA. In addition, APHIS would develop a program standards document entitled, ''Uniform Methods and Rules—Equine Viral Arteritis'' (UM&R). APHIS would draft this document with cooperation from the States, the equine industry, and other interested entities. The UM&R would be based on standards set by the Office International des Epizooties and guidelines of the American Horse Council. The UM&R would contain uniform standards that States could use for detecting, controlling, and preventing EVA, as well as recommended standards for the intrastate and interstate movement of stallions that are serologically positive for EVA, stallions that are shedders, and infected semen. The UM&R would be available for use as a guidance document only.

As in the Voluntary Control Program, APHIS would quarantine imported stallions at the time of arrival and test them to determine whether they are serologically positive for EVA. APHIS would also test imported equine semen for EVA at the time of arrival. APHIS would note the test results on the import permit accompanying the stallion or semen, release the stallion or semen, and notify animal health regulatory officials in the State of destination of any that were positive. APHIS would recommend that positive stallions be moved to an approved location in the State of destination for virus isolation testing by the State.

APHIS would also recommend that each State develop an EVA program that includes testing domestic stallions and semen for EVA. As part of this program, APHIS would recommend that each State determine the serology of a stallion upon entry into the State and record its test result on the stallion's health certificate. APHIS would recommend that the State conduct a virus isolation test on positive stallions. APHIS would also recommend that each State test equine semen for EVA upon entry into the State and record its test result on the semen's health certificate. APHIS would further recommend that infected semen and stallions that are positive or shedding the EVA virus be handled in accordance with the UM&R. In addition, APHIS would recommend that States make all test results for domestic and imported stallions and semen a matter of public record.

Certification Program

APHIS would develop this program with cooperation from individual States and the U.S. equine industry. This program would include an educational program for equine producers and equine practitioners regarding the etiology, treatment, and prevention of EVA. It would include use of the UM&R previously described and a new component a certification program that States could participate in.

As in the previous two programs described, APHIS would quarantine imported stallions at the time of arrival and test them to determine whether they are serologically positive for EVA. APHIS would also test imported equine semen for EVA at the time of arrival. APHIS would note the test results on the import permit accompanying the stallion or semen and release the stallion or semen. However, APHIS would release imported positive stallions and infected semen only to States participating in the certification program. In addition, APHIS would restrict the interstate movement of known domestic infected semen and stallions that are positive or shedders to those States participating in the certification program.

To be a participating State, a State would have to: (1) Conduct a virus isolation test on positive stallions upon movement into the State after release from APHIS import quarantine stations; (2) determine the serology of any domestic stallion upon its entry into the State, record the test result on the stallion's health certificate, and conduct a virus isolation test on stallions that test positive; (3) test domestic equine semen for EVA upon entry into the State and note the semen's status on its health certificate; (4) regulate the intrastate movement of infected semen and stallions that are positive or shedding the EVA virus in accordance with the UM&R. Also, APHIS would recommend that States make all test results for domestic and imported stallions and semen a matter of public record.

For a State that does not participate in the certification program, APHIS would recommend that the State develop an EVA program that includes testing domestic stallions and semen for EVA. As part of this program, APHIS would recommend that the State determine the serology of a stallion upon entry into the State, record the test result on the stallion's health certificate, and perform a virus isolation test on stallions that test positive. APHIS would also recommend that the State test equine semen for EVA upon entry into the State and record the test result on the semen's health certificate. In addition, APHIS would recommend that the State regulate the intrastate movement of infected semen and stallions that are positive or shedding the EVA virus in accordance with the UM&R. Also, APHIS would recommend that States make all test results for domestic and imported stallions and semen a matter of public record.

Eradication Program

APHIS would develop this program with cooperation from individual States and the U.S. equine industry. This program would include an educational program for equine producers and equine practitioners regarding the etiology, treatment, and prevention of EVA. It would include the use of the UM&R previously described.

Again, APHIS would quarantine all imported stallions at the time of arrival and test them to determine whether they are serologically positive for EVA. APHIS would move any imported stallion that tested positive for EVA to an APHIS-approved location for virus isolation testing to determine whether it was a shedder. APHIS would also test imported equine semen for EVA at the time of arrival. APHIS would record the test results on the import permit accompanying the stallion or semen. If APHIS determined that a stallion was not a shedder or that the imported semen was negative, we would release the stallion or semen. Positive stallions would be allowed to proceed to their destination; however, we would prohibit shedders and infected semen from entering the United States.

Under this program, APHIS would also require stallions and semen to be tested for EVA prior to interstate movement. The test results would have to be recorded on the health certificate accompanying the stallion or semen interstate. Also, APHIS would require a permit for the interstate movement of stallions that are shedders and infected semen. APHIS would recommend that each State conduct a virus isolation test on a stallion's semen the first time it is used for breeding purposes in that State. APHIS would also recommend that infected semen and stallions that are positive or shedding the EVA virus be moved intrastate in accordance with the UM&R. In addition, APHIS would initiate an EVA-vaccination program for domestic mares.

We welcome comments on the options described above and encourage the submission of new options or any suggestions.

Authority: 21 U.S.C, 111–113, 115, 117, 120, 121, 123–126, and 134–134h; 7 CFR 2.22, 2.80, and 371.4.

Done in Washington, DC this 14th day of September 2000.

Bobby R. Acord,

Acting Administrator, Animal and Plant Health Inspection Service.

[FR Doc. 00–24135 Filed 9–19–00; 8:45 am]

BILLING CODE 3410–34–U

DEPARTMENT OF TRANSPORTATION

Federal Aviation Administration

14 CFR Part 23

[Docket No. CE163; Notice No. 23–00–04–SC]

Special Conditions: Sino Swearingen, Model SJ30–2; Side-Facing Seat

AGENCY: Federal Aviation Administration (FAA), DOT.

ACTION: Notice of proposed special conditions.

SUMMARY: This action proposes special conditions for the Sino Swearingen, Model SJ30–2 airplane. This airplane will have a novel or unusual design feature(s) associated with side-facing seats. The applicable airworthiness regulations do not contain adequate or appropriate safety standards for this design feature. These proposed special conditions contain the additional safety standards that the Administrator considers necessary to establish a level of safety equivalent to that established by the existing airworthiness standards.

DATES: Comments must be received on or before October 20, 2000.

ADDRESSES: Comments on this proposal may be mailed in duplicate to: Federal Aviation Administration, Regional Counsel, ACE–7, Attention: Rules Docket, Docket No. CE163, 901 Locust, Room 506, Kansas City, Missouri 64106, or delivered in duplicate to the Regional Counsel at the above address. Comments must be marked: CE163. Comments may be inspected in the Rules Docket weekdays, except Federal holidays, between 7:30 a.m. and 4:00 p.m.

FOR FURTHER INFORMATION CONTACT: Les Taylor, Federal Aviation Administration, Aircraft Certification Service, Small Airplane Directorate, ACE–111, 901 Locust, Room 301, Kansas City, Missouri, 816–329–4134, fax 816–329–4090.

SUPPLEMENTARY INFORMATION:

Comments Invited

Interested persons are invited to participate in the making of these proposed special conditions by submitting such written data, views, or arguments as they may desire. Communications should identify the regulatory docket or notice number and be submitted in duplicate to the address specified above. The Administrator will consider all communications received on or before the closing date for comments. The proposals described in this action may be changed in light of the comments received. All comments received will be available in the Rules Docket for examination by interested persons, both before and after the closing date for comments. A report summarizing each substantive public contact with FAA personnel concerning this rulemaking will be filed in the docket. Persons wishing the FAA to acknowledge receipt of their comments submitted in response to this action must include with those comments a self-addressed, stamped postcard on which the following statement is made: ''Comments to CE163.'' The postcard will be date stamped and returned to the commenter.

Background

On October 9, 1995, Sino Swearingen Aircraft Company, 1770 Sky Place Boulevard, San Antonio, Texas 78216, applied for normal category type certificate for their new Model SJ30–2. The Model SJ30–2 airplane is a six-to-eight place, all metal, low-wing, T-tail, twin turbofan engine powered airplane with fully enclosed retractable landing gear. The SJ30–2 will have a VMO/MMO of 320 knots/M=.83, and will have engines mounted aft on the fuselage.

The Model SJ30–2 airplane will contain one side-facing seat. Side facing seats are considered a novel design and were not considered when those airworthiness standards were promulgated. The FAA has determined that the existing regulations do not provide adequate or appropriate safety standards for occupants of side-facing single occupant seats. In order to provide a level of safety that is equivalent to that afforded to occupants of forward and aft facing seats, additional airworthiness standards, in the form of additional special conditions, are necessary.

Type Certification Basis

Under the provisions of 14 CFR 21.17, Sino Swearingen Aircraft Company must show that the Model SJ30–2 meets the applicable provisions of 14 CFR part 23 as amended by Amendments 23–1 through 23–53, and selected portions of 14 CFR part 25 as provided for by 14 CFR part 21, §§ 21.16 and 21.17(a)(2); exemptions, if any; equivalent level of safety findings, if any; and the special conditions adopted by this rulemaking action.

If the Administrator finds that the applicable airworthiness regulations (*i.e.,* part 23) do not contain adequate or appropriate safety standards for the Sino Swearingen Model SJ30–2 because of a novel or unusual design feature, special conditions are prescribed under the provisions of § 21.16.

In addition to the applicable airworthiness regulations and special conditions, the Model SJ30–2 must comply with the part 23 fuel vent and exhaust emission requirements of 14 CFR part 34 and the noise certification requirements of 14 CFR part 36, and the FAA must issue a finding of regulatory adequacy pursuant to section 611 of Public Law 92–574, the ''Noise Control Act of 1972.''

Special conditions, as appropriate, are issued in accordance with § 11.49 after public notice, as required by §§ 11.28 and 11.29(b), and become part of the type certification basis in accordance with § 21.17(a)(2).

Novel or Unusual Design Features

The Model SJ30–2 will incorporate the following novel or unusual design features: A side-facing seat occupiable for taxi, takeoff and landing.

FAA Position

The intent of these special conditions is to establish a level of safety for the occupant of the side facing seat consistent with the level afforded occupants of the forward and aft facing seats. The primary objective is that all occupants should have protection from serious injuries, regardless of the orientation of the seat system. Occupants of side facing seats are exposed to different physical loads than forward facing occupants, such as lateral body contact with armrests and walls. Thus, a means to assess the potential for injuries due to occupant loads imparted by lateral impacts must be imposed.

Therefore, the following special conditions are considered to be applicable to the side facing seat on the SJ30–2.

In addition to the airworthiness standards in §§ 23.562 and 23.785, the following special conditions provide the additional injury criteria and installation/testing guidelines that represent the minimum acceptable

airworthiness standards for side facing seats:

1. Injury Criteria

(a) *Existing Criteria:* All injury protection criteria of § 23.562(c)(1) through (c)(7) and § 23.785 apply to the occupant of a side facing seat. Head Injury Criteria (HIC) assessments are only required for head contact with either the seat or adjacent structures or both.

(b) *Body-to-wall/furnishing contact:* The seat must be installed aft of a structure such as an interior wall or furnishing that will support the pelvis, upper arm, chest, and head of an occupant seated next to the structure. Horizontal tests of the seat must include representative structures for the forward wall. The wall must include attachments that represent the geometry, strength, and stiffness of the airplane installation. If there are structures forward of the wall that will affect the deformation of the wall, these structures must be addressed in the test procedure. The contact surface of this structure must be covered with at least two inches of energy absorbing protective foam, such as ensolite.

(c) *Thoracic Trauma:* Testing with a Side Impact Dummy (SID), as defined by 49 CFR part 572, Subpart F, or its equivalent, must be conducted and Thoracic Trauma Index (TTI) injury criteria acquired with the SID must be less than 85, as defined in 49 CFR part 572, Subpart F. SID TTI data must be processed as defined in Federal Motor Vehicle Safety Standard (FMVSS) § 571.214, S 6.13.5. Rational analysis, comparing an installation with another installation where TTI data were acquired and found acceptable, may also be viable.

(d) *Pelvis:* Pelvic lateral acceleration must not exceed 130g. Pelvic acceleration data must be processed as defined in FMVSS § 571.214, S 6.13.5.

2. General Test Guidelines

(a) One test with the SID Anthropomorphic Test Dummy (ATD), undeformed floor, no yaw, and with all lateral structural supports (armrests/walls).

Pass/fail injury assessments: TTI; and pelvic acceleration.

(b) One test with the Hybrid II ATD, or equivalent, deformed floor, with 10 degrees yaw, and with all lateral structural supports (armrests/walls). Pass/fail injury assessments: HIC; and upper torso restraint system retention and pelvic acceleration.

(c) Vertical test to be conducted with modified Hybrid II ATD's with existing pass/fail criteria.

Applicant's Position

The intent of the criteria established is to provide an equivalent level of safety to that afforded to forward and aft facing seats. The applicant concurs that the test guidelines and injury criteria defined achieve that goal with the following exceptions and clarifications.

1. In the assessment of the TTI and pelvic lateral accelerations for the test condition defined in Item 2(a), the applicant proposes to retain the option of using either the SID ATD as defined or, alternately, the EuroSID ATD as defined by the Official Journal of European Communities, L169 Volume 39, dated July 8, 1996, Directive 96/27/EC and amending Directive 70/156/EEC. The applicant considers both the SID and the EuroSID to be acceptable ATD's for the showing of compliance with the requirements of Item 2(a).

2. The designation of ''seat/restraint systems * * * installed in the first row'' given in § 23.562 is applied to the crew seats located on the flight deck. The designation of ''all other seat/restraint systems'' given in § 23.562 is applicable to all SJ30–2 seats other than those located on the flight deck. Therefore, the test conditions of Items 2(a) and 2(b) shall be in accordance with the 21G pulse defined in § 23.562(b)(2) with the exceptions noted, and the test conditions of Item 2(c) shall be in accordance with the 15G pulse defined in § 23.562(b)(1) with the exceptions noted.

Applicability

As discussed above, these special conditions are applicable to the Model SJ30–2. Should Sino Swearingen Aircraft Company apply at a later date for a change to the type certificate to include another model incorporating the same novel or unusual design feature, the special conditions would apply to that model as well under the provisions of § 21.101(a)(1).

Conclusion

The special conditions proposed in the FAA position are acceptable. The conditions requested by the applicant are as follows:

1. The EuroSID–1 ATD as defined in the Applicant's Position is considered an acceptable equivalent for the purposes of the tests defined in these special conditions.

2. The applicants position which is consistent with Advisory Circular 23.562–1, page 4, shows a table in which ''crew'' seats are shown to meet the 19/26G pulses and passenger seats are shown to meet the 15/21 G pulses.

This action affects only certain novel or unusual design features on one model of airplane. It is not a rule of general applicability, and it affects only the applicant who applied to the FAA for approval of these features on the airplane.

List of Subjects in 14 CFR Part 23

Aircraft, Aviation safety, Signs and symbols.

Citation

The authority citation for these special conditions is as follows:

Authority: 49 U.S.C. 106(g), 40113 and 44701; 14 CFR 21.16 and 21.17 for TC; and 14 CFR 11.28 and 11.29(b).

The Proposed Special Conditions

Accordingly, the Federal Aviation Administration (FAA) proposes the following special conditions as part of the type certification basis for the Sino Swearingen Aircraft Company Model SJ30–2 airplane applicable to side-facing seats occupiable during taxi, takeoff, and landing.

1. Injury Criteria

(a) *Existing Criteria:* All injury protection criteria of § 23.562(c)(1) through (c)(7) and § 23.785 apply to the occupant of a side facing seat. Head Injury Criteria (HIC) assessments are only required for head contact with either the seat or adjacent structures or both.

(b) *Body-to-wall/furnishing contact:* The seat must be installed aft of a structure such as an interior wall or furnishing that will support the pelvis, upper arm, chest, and head of an occupant seated next to the structure. Horizontal tests of the seat must include representative structures for the forward wall. The wall must include attachments that represent the geometry, strength, and stiffness of the airplane installation. If there are structures forward of the wall that will affect the deformation of the wall, these structures must be addressed in the test procedure. The contact surface of this structure must be covered with at least two inches of energy absorbing protective foam, such as ensolite.

(c) *Thoracic Trauma:* Testing with a Side Impact Dummy (SID), as defined by 49 CFR part 572, Subpart F, or its equivalent, must be conducted and Thoracic Trauma Index (TTI) injury criteria acquired with the SID must be less than 85, as defined in 49 CFR part 572, Subpart F. SID TTI data must be processed as defined in Federal Motor Vehicle Safety Standard (FMVSS) § 571.214, S 6.13.5. Rational analysis, comparing an installation with another installation where TTI data were acquired and found acceptable, may

also be viable. The use of the EuroSID–1 as defined by the Official Journal of European Communities, L169 Volume 39, dated July 8, 1996, Directive 96/27/EC and amending Directive 70/156/EEC is considered acceptable for the collection of this data.

(d) *Pelvis:* Pelvic lateral acceleration must not exceed 130g. Pelvic acceleration data must be processed as defined in FMVSS § 571.214, S 6.13.5.

2. General Test Guidelines

(a) One test with the SID Anthropomorphic Test Dummy (ATD) or the EuroSID–1, as defined above, undeformed floor, no yaw, and with all lateral structural supports (armrests/walls).

Pass/fail injury assessments: TTI; and pelvic acceleration.

(b) One test with the Hybrid II ATD, or equivalent, deformed floor, with 10 degrees yaw, and with all lateral structural supports (armrests/walls).

Pass/fail injury assessments: HIC; and upper torso restraint system retention and pelvic acceleration.

(c) Vertical test to be conducted with modified Hybrid II ATD's with existing pass/fail criteria.

(d) G-loads used in 2(a), 2(b) and 2(c) are those defined in 14 CFR part 23, § 23.562(b), for first row (crew) and other rows (passenger) seats.

Issued in Kansas City, Missouri on September 6, 2000.

Michael Gallagher,

Manager, Small Airplane Directorate, Aircraft Certification Service.

[FR Doc. 00–23811 Filed 9–19–00; 8:45 am]

BILLING CODE 4910–13–P

DEPARTMENT OF TRANSPORTATION

Federal Aviation Administration

14 CFR Part 39

[Docket No. 2000–NM–125–AD]

RIN 2120–AA64

Airworthiness Directives; Empresa Brasileira de Aeronautica, S.A. (EMBRAER), Model EMB–120 Series Airplanes

AGENCY: Federal Aviation Administration, DOT.

ACTION: Notice of proposed rulemaking (NPRM).

SUMMARY: This document proposes the supersedure of an existing airworthiness directive (AD), applicable to all EMBRAER Model EMB–120 series airplanes, that currently requires revising the Airplane Flight Manual (AFM) to include requirements for activation of the ice protection systems and to add information regarding operation in icing conditions; installing an ice detector system; and revising the AFM to include procedures for testing system integrity. This action would require installing the ice detector system in accordance with revised procedures. This proposal is prompted by issuance of mandatory continuing airworthiness information by a foreign civil airworthiness authority. The actions specified by the proposed AD are intended to ensure that the flightcrew is able to recognize the formation of significant ice accretion and take appropriate action; such formation of ice could result in reduced controllability of the airplane in normal icing conditions.

DATES: Comments must be received by October 20, 2000.

ADDRESSES: Submit comments in triplicate to the Federal Aviation Administration (FAA), Transport Airplane Directorate, ANM–114, Attention: Rules Docket No. 2000–NM–125–AD, 1601 Lind Avenue, SW., Renton, Washington 98055–4056. Comments may be inspected at this location between 9:00 a.m. and 3:00 p.m., Monday through Friday, except Federal holidays. Comments may also be sent via the Internet using the following address: 9-anm-nprmcomment@faa.gov. Comments sent via the Internet must contain ''Docket No. 2000–NM–125–AD'' in the subject line and need not be submitted in triplicate. Comments sent via the Internet as attached electronic files must be formatted in Microsoft Word 97 for Windows or ASCII text.

The service information referenced in the proposed rule may be obtained from Empresa Brasileira de Aeronautica S.A. (EMBRAER), P.O. Box 343—CEP 12.225, Sao Jose dos Campos—SP, Brazil. This information may be examined at the FAA, Transport Airplane Directorate, 1601 Lind Avenue, SW., Renton, Washington; or at the FAA, Atlanta Aircraft Certification Office, One Crown Center, 1895 Phoenix Boulevard, suite 450, Atlanta, Georgia.

FOR FURTHER INFORMATION CONTACT: Carla Worthey, Program Manager, Program Management & Services Branch, ACE–118A, FAA, Atlanta Aircraft Certification Office, One Crown Center, 1895 Phoenix Boulevard, suite 450, Atlanta, Georgia 30349; telephone (770) 703–6062; fax (770) 703–6097.

SUPPLEMENTARY INFORMATION:

Comments Invited

Interested persons are invited to participate in the making of the proposed rule by submitting such written data, views, or arguments as they may desire. Communications shall identify the Rules Docket number and be submitted in triplicate to the address specified above. All communications received on or before the closing date for comments, specified above, will be considered before taking action on the proposed rule. The proposals contained in this notice may be changed in light of the comments received.

Submit comments using the following format:

- Organize comments issue-by-issue. For example, discuss a request to change the compliance time and a request to change the service bulletin reference as two separate issues.
- For each issue, state what specific change to the proposed AD is being requested.
- Include justification (e.g., reasons or data) for each request.

Comments are specifically invited on the overall regulatory, economic, environmental, and energy aspects of the proposed rule. All comments submitted will be available, both before and after the closing date for comments, in the Rules Docket for examination by interested persons. A report summarizing each FAA-public contact concerned with the substance of this proposal will be filed in the Rules Docket.

Commenters wishing the FAA to acknowledge receipt of their comments submitted in response to this notice must submit a self-addressed, stamped postcard on which the following statement is made: ''Comments to Docket Number 2000–NM–125–AD.'' The postcard will be date stamped and returned to the commenter.

Availability of NPRMs

Any person may obtain a copy of this NPRM by submitting a request to the FAA, Transport Airplane Directorate, ANM–114, Attention: Rules Docket No. 2000–NM–125–AD, 1601 Lind Avenue, SW., Renton, Washington 98055–4056.

Discussion

On December 11, 1997, the FAA issued AD 97–26–06, amendment 39–10249 (62 FR 66512, December 19, 1997), applicable to all EMBRAER Model EMB–120 series airplanes, to require revising the Airplane Flight Manual (AFM) to include requirements for activation of the ice protection systems and to add information regarding operation in icing conditions;

installing an ice detector system; and revising the AFM to include procedures for testing system integrity. That action was prompted by reports indicating that flightcrews experienced difficulties controlling the airplane during (or following) flight in normal icing conditions, when the ice protection system either was not activated when ice began to accumulate on the airplane, or the ice protection system was never activated. These difficulties may have occurred because the flightcrews did not recognize that a significant enough amount of ice had formed on the airplane to require activation of the deicing equipment. The requirements of that AD are intended to ensure that the flightcrew is able to recognize the formation of significant ice accretion and take appropriate action; such formation of ice could result in reduced controllability of the airplane in normal icing conditions.

Actions Since Issuance of Previous Rule

Since the issuance of that AD, the Departmento de Aviacao Civil (DAC), which is the airworthiness authority for Brazil, has advised the FAA that certain procedures (required by AD 97–26–06) for installing the ice detector system improperly affect the logic of the deicing system warning messages. The manufacturer has issued revised procedures.

Explanation of Relevant Service Information

EMBRAER has issued Service Bulletin 120–30–0027, Change 02, dated December 3, 1997; Change 03, dated June 26, 1998; and Change 04, dated July 13, 1999. The service bulletin describes procedures for installing an ice detector system. The procedures described in Changes 02–04 differ in several ways from those described in the original version of the service bulletin (which was cited in AD 97–26–06 as the appropriate source of service information for the installation) and its first revision. Changes 02–04 provide:

- Additional actions for airplanes modified in accordance with the original or first revised service bulletin.
- Additional installation instructions for airplanes that were originally equipped with provisions only for the system installation.
- Information to correct the system accomplishment.
- Correction of certain editorial errors.
- Correction of certain effectivity listings.
- Correction of information in certain steps related to follow-up testing.

The DAC classified Change 02 and subsequent revisions of the service bulletin as mandatory and issued Brazilian airworthiness directive 97–06–03R1, dated December 15, 1997, in order to ensure the continued airworthiness of these airplanes in Brazil.

FAA's Conclusions

This airplane model is manufactured in Brazil and is type certificated for operation in the United States under the provisions of section 21.29 of the Federal Aviation Regulations (14 CFR 21.29) and the applicable bilateral airworthiness agreement. Pursuant to this bilateral airworthiness agreement, the DAC has kept the FAA informed of the situation described above. The FAA has examined the findings of the DAC, reviewed all available information, and determined that AD action is necessary for products of this type design that are certificated for operation in the United States.

Explanation of Requirements of Proposed Rule

Since an unsafe condition has been identified that is likely to exist or develop on other airplanes of the same type design registered in the United States, the proposed AD would supersede AD 97–26–06 to continue to require revising the Airplane Flight Manual (AFM) to include requirements for activation of the ice protection systems and to add information regarding operation in icing conditions; installing an ice detector system; and revising the AFM to include procedures for testing system integrity. The proposed AD would require that the ice detector system be installed in accordance with revised procedures. The actions would be required to be accomplished in accordance with the AFM revisions, and in accordance with Change 02, 03, or 04 of the service bulletin, all described previously.

Difference Between Proposed AD and Foreign Airworthiness Directive

This proposed AD and the Brazilian airworthiness directive differ in the compliance times to install the ice detector system. The Brazilian airworthiness directive mandated the installation by June 1, 1998 (6 months after the effective date). However, the FAA has determined that an interval of six months would not address the identified unsafe condition in a timely manner. In developing an appropriate compliance time for this AD, the FAA considered not only the manufacturer's recommendation, but the degree of urgency associated with addressing the subject unsafe condition, the average utilization of the affected fleet, and the time necessary to install the ice detector system. In light of these factors, the FAA finds a 30-day compliance time for initiating the required actions to be warranted, in that it represents an appropriate interval of time allowable for affected airplanes to continue to operate without compromising safety.

Cost Impact

There are approximately 250 airplanes of U.S. registry that would be affected by this proposed AD.

The AFM revisions currently required by AD 97–26–06 and retained in this proposed AD take approximately 1 work hour per airplane to accomplish, at an average labor rate of $60 per work hour. Based on these figures, the cost impact of the AFM revision on U.S. operators is estimated to be $60 per airplane.

The complete installation currently required by AD 97–26–06 and retained in this proposed AD takes approximately 53 work hours per airplane to accomplish, at an average labor rate of $60 per work hour. Required parts would cost approximately $13,054 per airplane. Based on these figures, the cost impact of the installation on U.S. operators is estimated to be $16,234 per airplane.

The additional installations described in Parts III and IV of EMBRAER Service Bulletin 120–30–0027 (Change 02, 03, or 04) would each take approximately 5 work hours per airplane. The additional tests described in Part VI would take approximately 2 work hours per airplane to accomplish. The average labor rate is $60 per work hour. Information regarding the cost of parts required to accomplish the modifications described in Parts III and IV is unavailable at this time; there would be no cost for parts required to complete Part VI. Based on these figures, the cost impact of the additional modifications and tests proposed by this AD on U.S. operators required for those airplanes that have previously complied with the original issue or Change 01 of the service bulletin is estimated to be as high as $420 per airplane (excluding parts).

The cost impact figures discussed above are based on assumptions that no operator has yet accomplished any of the current or proposed requirements of this AD action, and that no operator would accomplish those actions in the future if this AD were not adopted.

Regulatory Impact

The regulations proposed herein would not have a substantial direct effect on the States, on the relationship between the national Government and

the States, or on the distribution of power and responsibilities among the various levels of government. Therefore, it is determined that this proposal would not have federalism implications under Executive Order 13132.

For the reasons discussed above, I certify that this proposed regulation (1) is not a ''significant regulatory action'' under Executive Order 12866; (2) is not a ''significant rule'' under the DOT Regulatory Policies and Procedures (44 FR 11034, February 26, 1979); and (3) if promulgated, will not have a significant economic impact, positive or negative, on a substantial number of small entities under the criteria of the Regulatory Flexibility Act. A copy of the draft regulatory evaluation prepared for this action is contained in the Rules Docket. A copy of it may be obtained by contacting the Rules Docket at the location provided under the caption **ADDRESSES**.

List of Subjects in 14 CFR Part 39

Air transportation, Aircraft, Aviation safety, Safety.

The Proposed Amendment

Accordingly, pursuant to the authority delegated to me by the Administrator, the Federal Aviation Administration proposes to amend part 39 of the Federal Aviation Regulations (14 CFR part 39) as follows:

PART 39—AIRWORTHINESS DIRECTIVES

1. The authority citation for part 39 continues to read as follows:

Authority: 49 U.S.C. 106(g), 40113, 44701.

§ 39.13 [Amended]

2. Section 39.13 is amended by removing amendment 39–10249 (62 FR 66512, December 19, 1997), and by adding a new airworthiness directive (AD), to read as follows:

Empresa Brasileira de Aeronautica, S.A. (EMBRAER): Docket 2000–NM–125–AD. Supersedes AD 97–26–06, Amendment 39–10249.

Applicability: All Model EMB–120 series airplanes, certificated in any category.

Note 1: This AD applies to each airplane identified in the preceding applicability provision, regardless of whether it has been modified, altered, or repaired in the area subject to the requirements of this AD. For airplanes that have been modified, altered, or repaired so that the performance of the requirements of this AD is affected, the owner/operator must request approval for an alternative method of compliance in accordance with paragraph (c)(1) of this AD. The request should include an assessment of the effect of the modification, alteration, or repair on the unsafe condition addressed by this AD; and, if the unsafe condition has not been eliminated, the request should include specific proposed actions to address it.

Compliance: Required as indicated, unless accomplished previously.

To ensure that the flightcrew is able to recognize the formation of significant ice accretion, which could result in reduced controllability of the airplane in normal icing conditions, accomplish the following:

Restatement of Certain Requirements of AD 97–26–06

(a) Within 30 days after January 23, 1998 (the effective date of AD 97–26–06, amendment 39–10249), accomplish paragraphs (a)(1) and (a)(2) of this AD.

AFM Revisions—Limitations Section

(1) Revise the Limitations Section of the FAA-approved Airplane Flight Manual (AFM) to include the following requirements for activation of the ice protection systems. This may be accomplished by inserting a copy of this AD in the AFM.

TURN ON ICE PROTECTION SYSTEM and IGNITION SWITCHES AS FOLLOWS:

• AOA, TAT, SLIP, ENGINE AIR INLET, and IGNITION SWITCHES:

—When atmospheric or ground icing conditions exist.

• PROPELLER:

—When atmospheric or ground icing conditions exist, OR

—At the first sign of ice formation anywhere on the aircraft.

• WING and TAIL LEADING EDGES, and WINDSHIELD:

—At the first sign of ice formation anywhere on the aircraft.

Note: On takeoff, delay activation of the wing and tail leading edge de-ice systems until reaching the final segment speed.

Note: Atmospheric icing conditions exist when:

—Indicated Outside Air Temperature (OAT) during ground operations or Total Air Temperature (TAT) in flight is 10 degrees C or below; and

—Visible moisture in any form is present (such as clouds, fog with visibility of one mile or less, rain, snow, sleet, or ice crystals).

Note: Ground icing conditions exist when:

—Indicated OAT during ground operations is 10 degrees C or below; and

—Surface snow, standing water, or slush is present on the ramps, taxiways, or runways.

Note: For Operation in Atmospheric Icing Conditions:

—Follow the procedures in the Normal Procedures Section under ''Operation in Icing Conditions.''

AFM Revisions—Normal Procedures Section

(2) Revise the Normal Procedures Section of the FAA-approved AFM to include the following additional and revised information regarding operation in icing conditions. This may be accomplished by inserting a copy of this AD in the AFM.

''Under DAILY CHECKS of the Ice Protection System, add the following:

The following tests must be performed prior to the first flight of the day for which known or forecast icing conditions are anticipated.

Ice Detector System TEST Button (if installed)—PRESS

Check normal test sequence.

Under APPROACH Checklist, add the following:

Minimum Airspeed—APPROPRIATE TO FLAP POSITION (See Table Below)

Gear/Flap	Minimum recommended airspeed
UP/0°	150 KIAS
UP/15°	130 KIAS

Under OPERATION IN ICING CONDITIONS for FLYING INTO ICING CONDITION, *replace* the current AFM section information for normal icing conditions with the following:

—During flight, monitoring for icing conditions should start whenever the indicated outside air temperature is near or below freezing or when operating into icing conditions, as specified in the Limitations Section of this manual.

—When operating in icing conditions, the front windshield corners (unheated areas), propeller spinners, and wing leading edges will provide good visual cues of ice accretion.

—For airplanes equipped with an ice detection system, icing conditions will also be indicated by the illumination of the ICE CONDITION light on the multiple alarm panel.

—When atmospheric or ground icing conditions exist, proceed as follows:

AOA, TAT, SLIP, and ENGINE AIR INLET—ON

IGNITION Switches—ON

AIRSPEED (Flaps and Gear UP)—60 KIAS MINIMUM

—When atmospheric or ground icing conditions exist, OR

—At the first sign of ice formation anywhere on the aircraft, proceed as follows:

PROPELLER Deicing Switch—ON

Select NORM mode if indicated OAT is above −10°C (14°F) or COLD mode if indicated OAT is below −10°C (14°F).

—At the first sign of ice formation anywhere on the aircraft, proceed as follows:

WINDSHIELD—ON

WING and TAIL LEADING EDGE—ON

Visually evaluate the severity of the ice encounter and the rate of accretion and select light or heavy mode (1-minute or 3-minute cycle) based on this evaluation.

Note: On takeoff, delay activation of the wing and tail leading edge de-ice systems until reaching the final segment speed.

Note: The minimum NH required for proper operation of the pneumatic deicing system is 80%. At lower NH values, the pneumatic deicing system may not totally inflate, and the associated failure lights on the overhead panel may illuminate. If this occurs, increase NH.

Holding configuration:

Landing Gear Lever—UP

Flap Selector Lever—UP

N_P—85% MINIMUM

Increase N_P as required to eliminate propeller vibrations.

Approach and Landing procedure:

Increase approach and landing speeds, according to the following flap settings, until landing is assured. Reduce airspeed to cross runway threshold (50 ft) at V_{REF}.

Flaps 15—Increase Speed by 10 KIAS (130+10)

Flaps 25—Increase Speed by 10 KIAS (V_{REF25}+10)

Flaps 45—Increase Speed by 5 KIAS (V_{REF45}+5)

Go-Around procedure:

Reduce values from Maximum Landing Weight Approach Climb Limited charts by:

1500 lbs. for PW 118 Engines

1544 lbs. for PW 118A and 118B Engines

Flaps 15—Increase approach climb speed by 10 KIAS (V_2+10);

Decrease approach climb gradient by:

3.0% for PW 118 Engines

2.9% for PW 118A and 118B Engines

Flaps 25—Increase landing climb speed by 10 KIAS (V_{REF25}+10)

Flaps 45—Increase landing climb speed by 5 KIAS (V_{REF}+5)

Caution: The ice protection systems must be turned on immediately (except leading edge de-icers during takeoff) when the ICE CONDITION light illuminates on the multiple alarm panel or when any ice accretion is detected by visual observation or other cues.

Caution: Do not interrupt the automatic sequence of operation of the leading edge de-ice boots once it is turned ON. The system should be turned OFF only after leaving the icing conditions and after the protected surfaces of the wing are free of ice.''

New Requirements of this AD—Ice Detector Installation

(b) For airplanes identified in any of Parts I, II, III, IV, V, and VI of EMBRAER Service Bulletin 120–30–0027, Change 02, dated December 3, 1997; Change 03, dated June 26, 1998; or Change 04, dated July 13, 1999: Within 30 days after the effective date of this AD, install an ice detector system in accordance with the service bulletin.

Alternative Methods of Compliance

(c)(1) An alternative method of compliance or adjustment of the compliance time that provides an acceptable level of safety may be used if approved by the Manager, Atlanta Aircraft Certification Office, FAA. Operators shall submit their requests through an appropriate FAA Principal Maintenance Inspector, who may add comments and then send it to the Manager, Atlanta ACO.

(2) Alternative methods of compliance, approved previously in accordance with AD 97–26–06, amendment 39–10249, are approved as alternative methods of compliance with this AD.

Note 2: Information concerning the existence of approved alternative methods of compliance with this AD, if any, may be obtained from the Atlanta ACO.

Special Flight Permits

(d) Special flight permits may be issued in accordance with sections 21.197 and 21.199 of the Federal Aviation Regulations (14 CFR 21.197 and 21.199) to operate the airplane to a location where the requirements of this AD can be accomplished.

Note 3: The subject of this AD is addressed in Brazilian airworthiness directive 97–06–03R1, dated December 15, 1997.

Issued in Renton, Washington, on September 14, 2000.

Donald L. Riggin,

Acting Manager, Transport Airplane Directorate, Aircraft Certification Service.

[FR Doc. 00–24117 Filed 9–19–00; 8:45 am]

BILLING CODE 4910–13–U

DEPARTMENT OF TRANSPORTATION

Federal Aviation Administration

14 CFR Part 39

[Docket No. 99–NM–381–AD]

RIN 2120–AA64

Airworthiness Directives; Airbus Model A319, A320, and A321 Series Airplanes

AGENCY: Federal Aviation Administration, DOT.

ACTION: Notice of proposed rulemaking (NPRM).

SUMMARY: This document proposes the supersedure of an existing airworthiness directive (AD), applicable to certain Airbus Model A319, A320, and A321 series airplanes, that currently requires repetitive inspections to detect wear of the inboard flap trunnions, and to detect wear or debonding of the protective half-shells; and corrective actions, if necessary. This proposal would require accomplishment of the previously optional terminating action. This proposal is prompted by issuance of mandatory continuing airworthiness information by a foreign civil airworthiness authority. The actions specified by the proposed AD are intended to prevent chafing and resultant wear damage on the inboard flap drive trunnions or on the protective half-shells, which could result in failure of the trunnion primary load path; this would adversely affect the fatigue life of the secondary load path and could lead to loss of the flap.

DATES: Comments must be received by October 20, 2000.

ADDRESSES: Submit comments in triplicate to the Federal Aviation Administration (FAA), Transport Airplane Directorate, ANM–114, Attention: Rules Docket No. 99–NM–381–AD, 1601 Lind Avenue, SW., Renton, Washington 98055–4056. Comments may be inspected at this location between 9 a.m. and 3 p.m., Monday through Friday, except Federal holidays. Comments may be submitted via fax to (425) 227–1232. Comments may also be sent via the Internet using the following address: 9-anm-nprmcomment@faa.gov. Comments sent via fax or the Internet must contain ''Docket No. 99–NM–381–AD'' in the subject line and need not be submitted in triplicate. Comments sent via the Internet as attached electronic files must be formatted in Microsoft Word 97 for Windows or ASCII text.

The service information referenced in the proposed rule may be obtained from Airbus Industrie, 1 Rond Point Maurice Bellonte, 31707 Blagnac Cedex, France. This information may be examined at the FAA, Transport Airplane Directorate, 1601 Lind Avenue, SW., Renton, Washington.

FOR FURTHER INFORMATION CONTACT: Norman B. Martenson, Manager, International Branch, ANM–116, FAA, Transport Airplane Directorate, 1601 Lind Avenue, SW., Renton, Washington 98055–4056; telephone (425) 227–2110; fax (425) 227–1149.

SUPPLEMENTARY INFORMATION:

Comments Invited

Interested persons are invited to participate in the making of the proposed rule by submitting such written data, views, or arguments as they may desire. Communications shall identify the Rules Docket number and be submitted in triplicate to the address specified above. All communications received on or before the closing date for comments, specified above, will be considered before taking action on the proposed rule. The proposals contained in this notice may be changed in light of the comments received.

Submit comments using the following format:

- Organize comments issue-by-issue. For example, discuss a request to change the compliance time and a request to change the service bulletin reference as two separate issues.
- For each issue, state what specific change to the proposed AD is being requested.
- Include justification (e.g., reasons or data) for each request.

Comments are specifically invited on the overall regulatory, economic, environmental, and energy aspects of the proposed rule. All comments submitted will be available, both before and after the closing date for comments, in the Rules Docket for examination by interested persons. A report summarizing each FAA-public contact concerned with the substance of this proposal will be filed in the Rules Docket.

Commenters wishing the FAA to acknowledge receipt of their comments submitted in response to this notice

must submit a self-addressed, stamped postcard on which the following statement is made: ''Comments to Docket Number 99–NM–381–AD.'' The postcard will be date stamped and returned to the commenter.

Availability of NPRMs

Any person may obtain a copy of this NPRM by submitting a request to the FAA, Transport Airplane Directorate, ANM–114, Attention: Rules Docket No. 99–NM–381–AD, 1601 Lind Avenue, SW., Renton, Washington 98055–4056.

Discussion

On August 10, 1999, the FAA issued AD 99–17–11, amendment 39–11259 (64 FR 45868, August 23, 1999), applicable to certain Airbus Model A319, A320, and A321 series airplanes, to require repetitive inspections to detect wear of the inboard flap trunnions, and to detect wear or debonding of the protective half-shells; and corrective actions, if necessary. That action was prompted by issuance of mandatory continuing airworthiness information by a foreign civil airworthiness authority. The requirements of that AD are intended to detect and correct chafing and resultant wear damage on the inboard flap drive trunnions or on the protective half-shells, which could result in failure of the trunnion primary load path; this would adversely affect the fatigue life of the secondary load path and could lead to loss of the flap.

Actions Since Issuance of Previous Rule

AD 99–17–11 provides for an optional modification, which, if accomplished, would constitute terminating action for the required inspections. Since the issuance of that AD, the FAA has determined that the modification should be made mandatory for airplanes subject to the identified unsafe condition. Such modification would terminate the extensive repetitive inspections and/or corrective actions of the protective half-shell (area 1) to detect wear or debonding, and of the trunnion (area 2) to detect wear.

Explanation of Relevant Service Information

Airbus has issued Service Bulletin A320–27–1117, Revision 02, dated January 18, 2000, which describes procedures for modification of the sliding panel mechanism of the flap drive trunnion. Revision 02 is essentially equivalent to previous revisions of the service bulletin (which were cited in AD 99–17–11 as appropriate sources of service information for accomplishment of the modification). However, certain work procedures have been clarified in Revision 02. Accomplishment of this modification would eliminate the need for repetitive inspections. The DGAC approved this service bulletin and issued French airworthiness directive 1996–271–092(B) R3, dated August 11, 1999, in order to assure the continued airworthiness of these airplanes in France.

Airbus also has issued Service Bulletin A320–27–1108, Revision 04, dated November 22, 1999, which describes procedures for repetitive detailed visual inspections of the protective half-shell (area 1) to detect wear or debonding, and detailed visual inspections of the trunnion (area 2) to detect wear. This revision is essentially equivalent to previous revisions, which were cited as the appropriate sources of service information for certain inspections required by AD 99–17–11. However, certain references have been revised and certain work procedures have been clarified in this revision.

Airbus also has issued Service Bulletin A320–27–1066, Revision 5, dated June 25, 1999, which describes procedures for repetitive detailed visual inspections of areas 1 and 2 of the inboard flap trunnion to detect wear on the trunnion; and repair or replacement of the trunnion, if necessary. Revision 5 is essentially equivalent to A320–27–1066, Revision 4, dated July 15, 1997 (for Model A320 series airplanes), which was cited as an appropriate source of service information for certain inspections required by AD 99–17–11.

FAA's Conclusions

These airplane models are manufactured in France and are type certificated for operation in the United States under the provisions of section 21.29 of the Federal Aviation Regulations (14 CFR 21.29) and the applicable bilateral airworthiness agreement. Pursuant to this bilateral airworthiness agreement, the DGAC has kept the FAA informed of the situation described above. The FAA has examined the findings of the DGAC, reviewed all available information, and determined that AD action is necessary for products of this type design that are certificated for operation in the United States.

Explanation of Requirements of Proposed Rule

Since an unsafe condition has been identified that is likely to exist or develop on other airplanes of the same type design registered in the United States, the proposed AD would supersede AD 99–17–11 to continue to require the actions specified in that AD, and to require accomplishment of the previously optional terminating action. The actions would be required to be accomplished in accordance with the service bulletins described previously.

The proposed AD also would revise paragraph (a)(3) of the existing AD to clarify which airplanes are affected by that paragraph. As stated in that paragraph, Airbus Model A320 series airplanes ''on which Airbus Modification 22881 has been accomplished, and on which Airbus Modification 22841 or the modification specified in Airbus Service Bulletin A320–27–1050 has not been accomplished'' should accomplish certain actions. Since Airbus Modification 22881 corresponds to Airbus Service Bulletin A320–27–1050, the statement is contradictory as written, and cannot be literally complied with by operators. Therefore, the FAA is revising paragraph (a)(3) to apply to Airbus Model A320 series airplanes ''on which Airbus Modification 22881 (Airbus Service Bulletin A320–27–1050) has been accomplished, and on which Airbus Modification 22841 has not been accomplished.'' Paragraph (a)(3) has also been revised to provide operators with additional time in which to accomplish the inspection required by that paragraph. In addition, NOTE 2 of this proposed AD explains the revision to paragraph (a)(3) of AD 99–17–11 to correct the description of airplanes affected by that paragraph.

Differences Between Proposed Rule and Foreign AD

The proposed AD would differ from the parallel French airworthiness directive in that it would mandate the accomplishment of the terminating action for the repetitive inspections. The French airworthiness directive provides for that action as optional. Mandating the terminating action is based on the FAA's determination that long-term continued operational safety will be better assured by modifications or design changes to remove the source of the problem, rather than by repetitive inspections. Long-term inspections may not be providing the degree of safety assurance necessary for the transport airplane fleet. This, coupled with a better understanding of the human factors associated with numerous continual inspections, has led the FAA to consider placing less emphasis on inspections and more emphasis on design improvements. The proposed modification requirement is consistent with these conditions.

Cost Impact

There are approximately 132 airplanes of U.S. registry that would be affected by this proposed AD.

The actions that are currently required by AD 99–17–11, and retained in this AD, take approximately 1 work hour per airplane to accomplish, at an average labor rate of $60 per work hour. Based on these figures, the cost impact of the currently required actions on U.S. operators is estimated to be $7,920, or $60 per airplane, per inspection cycle.

The new actions that are proposed in this AD action would take approximately 14 work hours per airplane to accomplish, at an average labor rate of $60 per work hour. Required parts would be provided by the manufacturer at no cost to the operators. Based on these figures, the cost impact of the proposed requirements of this AD on U.S. operators is estimated to be $110,880, or $840 per airplane.

The cost impact figures discussed above are based on assumptions that no operator has yet accomplished any of the proposed requirements of this AD action, and that no operator would accomplish those actions in the future if this AD were not adopted. The cost impact figures discussed in AD rulemaking actions represent only the time necessary to perform the specific actions actually required by the AD. These figures typically do not include incidental costs, such as the time required to gain access and close up, planning time, or time necessitated by other administrative actions.

Regulatory Impact

The regulations proposed herein would not have a substantial direct effect on the States, on the relationship between the national Government and the States, or on the distribution of power and responsibilities among the various levels of government. Therefore, it is determined that this proposal would not have federalism implications under Executive Order 13132.

For the reasons discussed above, I certify that this proposed regulation (1) Is not a ''significant regulatory action'' under Executive Order 12866; (2) is not a ''significant rule'' under the DOT Regulatory Policies and Procedures (44 FR 11034, February 26, 1979); and (3) if promulgated, will not have a significant economic impact, positive or negative, on a substantial number of small entities under the criteria of the Regulatory Flexibility Act. A copy of the draft regulatory evaluation prepared for this action is contained in the Rules Docket. A copy of it may be obtained by contacting the Rules Docket at the location provided under the caption **ADDRESSES**.

List of Subjects in 14 CFR Part 39

Air transportation, Aircraft, Aviation safety, Safety.

The Proposed Amendment

Accordingly, pursuant to the authority delegated to me by the Administrator, the Federal Aviation Administration proposes to amend part 39 of the Federal Aviation Regulations (14 CFR part 39) as follows:

PART 39—AIRWORTHINESS DIRECTIVES

1. The authority citation for part 39 continues to read as follows:

Authority: 49 U.S.C. 106(g), 40113, 44701.

§ 39.13 [Amended]

2. Section 39.13 is amended by removing amendment 39–11259 (64 FR 45868, September 27, 1999), and by adding a new airworthiness directive (AD), to read as follows:

Airbus Industrie: Docket 99–NM–381–AD. Supersedes AD 99–17–11, Amendment 39–11259.

Applicability: Model A319, A320, and A321 series airplanes; certificated in any category; except airplanes on which Airbus Modification 26495 (reference Airbus Service Bulletin A320–27–1117) has been accomplished.

Note 1: This AD applies to each airplane identified in the preceding applicability provision, regardless of whether it has been otherwise modified, altered, or repaired in the area subject to the requirements of this AD. For airplanes that have been modified, altered, or repaired so that the performance of the requirements of this AD is affected, the owner/operator must request approval for an alternative method of compliance in accordance with paragraph (g)(1) of this AD. The request should include an assessment of the effect of the modification, alteration, or repair on the unsafe condition addressed by this AD; and, if the unsafe condition has not been eliminated, the request should include specific proposed actions to address it.

Compliance: Required as indicated, unless accomplished previously.

To prevent chafing and resultant wear damage on the inboard flap drive trunnions or on the protective half-shells, which could result in failure of the trunnion primary load path, adversely affect the fatigue life of the secondary load path, and lead to loss of the flap, accomplish the following:

Restatement of Certain Requirements of AD 99–17–11

Inspections

(a) For airplanes on which a protective half-shell has been installed over area 1 of the left or right inboard flap trunnion: Perform a detailed visual inspection of the protective half-shell (area 1) to detect wear or debonding, and perform a detailed visual inspection of the trunnion (area 2) to detect wear at the time specified in paragraph (a)(1), (a)(2), or (a)(3) of this AD, as applicable; in accordance with Airbus Service Bulletin A320–27–1108, Revision 01, dated July 15, 1997, Revision 02, dated April 17, 1998, or Revision 03, dated June 25, 1999.

(1) For Model A319 and Model A320 series airplanes on which Airbus Modification 22841 has been installed: Inspect prior to the accumulation of 2,500 flight hours after the incorporation of the modification, or within 500 flight hours after September 27, 1999 (the effective date of AD 99–17–11, amendment 39–11259), whichever occurs later.

(2) For Model A321 series airplanes on which Airbus Modification 23926 has been installed, or on which the repair specified in Airbus Service Bulletin A320–27–1097, dated October 5, 1996, or Revision 01, dated July 15, 1997, has been accomplished; and for Model A320 series airplanes on which the repair specified in Airbus Service Bulletin A320–27–1066, Revision 3, dated October 30, 1996, or Revision 4, dated July 15, 1997, has been accomplished: Inspect prior to the accumulation of 5,000 flight hours after incorporation of the repair or modification, or within 500 flight hours after September 27, 1999, whichever occurs later.

(3) For Airbus Model A320 series airplanes on which Airbus Modification 22881 (Airbus Service Bulletin A320–27–1050) has been accomplished, and on which Airbus Modification 22841 has not been accomplished: Inspect within 500 flight hours after the effective date of this new AD.

Note 2: Paragraph (a)(3) of AD 99–17–11 has been revised to correct the description of airplanes affected by that paragraph. Since such a revision could result in additional airplanes being affected, the compliance time has been restarted from the effective date of this AD to allow additional time to accomplish the actions required by that paragraph.

(b) For airplanes on which no protective half-shell is installed over area 1 of the left or right inboard flap trunnion: Within 500 flight hours after September 27, 1999, perform a detailed

visual inspection of areas 1 and 2 of the inboard flap trunnion to detect wear on the trunnion, in accordance with Airbus Service Bulletin A320–27–1066, Revision 4, dated July 15, 1997 (for Model A320 series airplanes); or A320–27–1097, Revision 01, dated July 15, 1997, or Revision 02, dated June 25, 1999 (for Model A321 series airplanes).

Corrective Actions

(c) Except as provided by paragraph (d) of this AD: Following the accomplishment of any inspection required by either paragraph (a) or (b) of this AD, perform the follow-on repetitive inspections and/or corrective actions, as applicable, in accordance with Airbus Service Bulletin A320–27–1066, Revision 4, dated July 15, 1997 (for Model A320 series airplanes); A320–27–1097, Revision 01, dated July 15, 1997, or Revision 02, dated June 25, 1999 (for Model A321 series airplanes); or A320–27–1108, Revision 01, dated July 15, 1997, Revision 02, dated April 17, 1998, or Revision 03, dated June 25, 1999 (for Model A319, A320, and A321 series airplanes); as applicable; at the compliance times specified in the applicable service bulletin.

(d) If the applicable service bulletin specifies to contact Airbus for an appropriate action, prior to further flight, repair in accordance with a method approved by either the Manager, International Branch, ANM–116, FAA, Transport Airplane Directorate, or the Direction Generale de l'Aviation Civile (or its delegated agent).

New Requirements of This AD

Service Bulletin Revisions

(e) As of the effective date of this new AD, the following service bulletin revisions must be used for accomplishment of the applicable actions required by paragraphs (a), (b), and (c) of this AD:

(1) Airbus Service Bulletin A320–27–1108, Revision 04, dated November 22, 1999.

(2) Airbus Service Bulletin A320–27–1066, Revision 5, dated June 25, 1999.

Terminating Modification

(f) Within 18 months after the effective date of this AD, modify the sliding panel driving mechanism of the flap drive trunnions, in accordance with Airbus Service Bulletin A320–27–1117, Revision 02, dated January 18, 2000. This modification constitutes terminating action for the repetitive inspections required by this AD.

Note 3: Accomplishment of the modification required by paragraph (f) of this AD prior to the effective date of this AD in accordance with Airbus Service Bulletin A320–27–1117, dated July 31, 1997, or Revision 01, dated June 25, 1999, is acceptable for compliance with that paragraph.

Alternative Methods of Compliance

(g)(1) An alternative method of compliance or adjustment of the compliance time that provides an acceptable level of safety may be used if approved by the Manager, International Branch, ANM–116. Operators shall submit requests through an appropriate FAA Principal Maintenance Inspector, who may add comments and then send it to the Manager, International Branch, ANM–116.

(2) Alternative methods of compliance, approved previously in accordance with AD 99–17–11, amendment 39–11259, are approved as alternative methods of compliance with this AD.

Note 4: Information concerning the existence of approved alternative methods of compliance with this AD, if any, may be obtained from the International Branch, ANM–116.

Special Flight Permits

(h) Special flight permits may be issued in accordance with sections 21.197 and 21.199 of the Federal Aviation Regulations (14 CFR 21.197 and 21.199) to operate the airplane to a location where the requirements of this AD can be accomplished.

Note 5: The subject of this AD is addressed in French airworthiness directive 1996–271–092(B) R3, dated August 11, 1999.

Issued in Renton, Washington, on September 14, 2000.

Donald L. Riggin,

Acting Manager, Transport Airplane Directorate, Aircraft Certification Service.

[FR Doc. 00–24116 Filed 9–19–00; 8:45 am]

BILLING CODE 4910–13–U

DEPARTMENT OF TRANSPORTATION

Federal Aviation Administration

14 CFR Part 39

[Docket No. 99–SW–65–AD]

RIN 2120–AA64

Airworthiness Directives; Eurocopter Deutschland GMBH Model BO–105CB–5 and BO–105CBS–5 Helicopters

AGENCY: Federal Aviation Administration, DOT.

ACTION: Supplemental notice of proposed rulemaking; reopening of comment period.

SUMMARY: This document revises an earlier proposed airworthiness directive (AD) for Eurocopter Deutschland GMBH (ECD) Model BO–105CB–5 and BO–105CBS–5 helicopters that would have superseded an existing AD. The existing AD requires, before further flight, creating a component log card or equivalent record and determining the calendar age and number of flights on each tension-torsion (TT) strap. The proposed AD would have required establishing a life limit for certain main rotor TT straps. That proposal was prompted by a need to establish a life limit for certain TT straps because of an accident in which a main rotor blade (blade) separated from an ECD Model MBB–BK 117 helicopter due to fatigue failure of a TT strap. The same part-numbered TT strap is used on the ECD Model BO–105 helicopters. This new action revises the proposed rule by requiring that you establish a life limit for certain main rotor TT straps before further flight instead of by January 1, 2001, as indicated in the previous proposal. This new action also removes some of the requirements that were previously proposed. The actions specified by this new proposed AD are intended to prevent fatigue failure of a TT strap, loss of a blade, and subsequent loss of control of the helicopter.

DATES: Comments must be received on or before November 20, 2000.

ADDRESSES: Submit comments in triplicate to the Federal Aviation Administration (FAA), Office of the Regional Counsel, Southwest Region, Attention: Rules Docket No. 99–SW–65–AD, 2601 Meacham Blvd., Room 663, Fort Worth, Texas 76137. You may also send comments electronically to the Rules Docket at the following address: 9-asw-adcomments@faa.gov. Comments may be inspected at the Office of the Regional Counsel between 9 a.m. and 3 p.m., Monday through Friday, except Federal holidays.

FOR FURTHER INFORMATION CONTACT: Charles Harrison, Aviation Safety Engineer, FAA, Rotorcraft Directorate, Rotorcraft Standards Staff, Fort Worth, Texas 76193–0110, telephone (817) 222–5128, fax (817) 222–5961.

SUPPLEMENTARY INFORMATION:

Comments Invited

Interested persons are invited to participate in the making of the proposed rule by submitting such written data, views, or arguments as they may desire. Communications

should identify the Rules Docket number and be submitted in triplicate to the address specified above. All communications received on or before the closing date for comments, specified above, will be considered before taking action on the proposed rule. The proposals contained in this notice may be changed in light of the comments received.

Comments are specifically invited on the overall regulatory, economic, environmental, and energy aspects of the proposed rule. All comments submitted will be available, both before and after the closing date for comments, in the Rules Docket for examination by interested persons. A report summarizing each FAA-public contact concerned with the substance of this proposal will be filed in the Rules Docket.

Commenters wishing the FAA to acknowledge receipt of their mailed comments submitted in response to this notice must submit a self-addressed, stamped postcard on which the following statement is made: ''Comments to Docket No. 99–SW–65–AD.'' The postcard will be date stamped and returned to the commenter.

Availability of SNPRMs

Any person may obtain a copy of this Supplemental Notice of Proposed Rulemaking (SNPRM) by submitting a request to the FAA, Office of the Regional Counsel, Southwest Region, Attention: Rules Docket No. 99–SW–65–AD, 2601 Meacham Blvd., Room 663, Fort Worth, Texas 76137.

Discussion

A proposal to amend part 39 of the Federal Aviation Regulations (14 CFR part 39) to add an AD for ECD Model BO–105CB–5 and BO–105CBS–5 helicopters was published as an NPRM in the **Federal Register** on March 13, 2000 (65 FR 13251). That NPRM proposed to supersede AD 99–24–05, Amendment 39–11429 (64 FR 62973, November 18, 1999), which requires, before further flight, creating a component log card and determining the calendar age and number of flights on each TT strap and inspecting and removing, as necessary, certain unairworthy TT straps. The NPRM, in addition to retaining the requirements of AD 99–24–05, would have required establishing a life limit, effective January 1, 2001, for the TT straps of 120 months or 25,000 flights, whichever occurs first.

Since the issuance of that NPRM, the FAA has reevaluated the proposed requirement and determined that establishing a life limit on the TT straps should be accomplished before January 1, 2001, as earlier indicated. The FAA has also determined that the graduated inspection criteria and the accompanying TT strap life limits specified in the current AD are no longer necessary after the currently specified life limit is established.

Since this change expands the scope of the originally proposed rule, the FAA has determined that it is necessary to reopen the comment period to provide additional opportunity for public comment.

The FAA estimates that 200 helicopters of U.S. registry would be affected by this proposed AD, that it would take approximately 16 work hours per helicopter to accomplish the proposed actions, and that the average labor rate is $60 per work hour. Required parts would cost approximately $10,400 per helicopter. Based on these figures, the total cost impact of the proposed AD on U.S. operators is estimated to be $2,272,200.

The regulations proposed herein would not have a substantial direct effect on the States, on the relationship between the national Government and the States, or on the distribution of power and responsibilities among the various levels of government. Therefore, it is determined that this proposal would not have federalism implications under Executive Order 13132.

For the reasons discussed above, I certify that this proposed regulation (1) is not a ''significant regulatory action'' under Executive Order 12866; (2) is not a ''significant rule'' under the DOT Regulatory Policies and Procedures (44 FR 11034, February 26, 1979); and (3) if promulgated, will not have a significant economic impact, positive or negative, on a substantial number of small entities under the criteria of the Regulatory Flexibility Act. A copy of the draft regulatory evaluation prepared for this action is contained in the Rules Docket. A copy of it may be obtained by contacting the Rules Docket at the FAA, Office of the Regional Counsel, Southwest Region, 2601 Meacham Blvd., Room 663, Fort Worth, Texas.

List of Subjects in 14 CFR Part 39

Air transportation, Aircraft, Aviation safety, Safety.

The Proposed Amendment

Accordingly, pursuant to the authority delegated to me by the Administrator, the Federal Aviation Administration proposes to amend part 39 of the Federal Aviation Regulations (14 CFR part 39) as follows:

PART 39—AIRWORTHINESS DIRECTIVES

1. The authority citation for part 39 continues to read as follows:

Authority: 49 U.S.C. 106(g), 40113, 44701.

§ 39.13 [Amended]

2. Section 39.13 is amended by adding a new airworthiness directive to read as follows:

Eurocopter Deutschland GMBH: Docket No. 99–SW–65–AD. Supersedes AD 99–24–05, Amendment 39–11429, Docket No. 99–SW–58–AD.

Applicability: Model BO–105 CB–5, and BO–105CBS–5 helicopters, certificated in any category.

Note 1: This AD applies to each helicopter identified in the preceding applicability provision, regardless of whether it has been otherwise modified, altered, or repaired in the area subject to the requirements of this AD. For helicopters that have been modified, altered, or repaired so that the performance of the requirements of this AD is affected, the owner/operator must request approval for an alternative method of compliance in accordance with paragraph (d) of this AD. The request should include an assessment of the effect of the modification, alteration, or repair on the unsafe condition addressed by this AD; and if the unsafe condition has not been eliminated, the request should include specific proposed actions to address it.

Compliance: Required as indicated, unless accomplished previously.

To prevent fatigue failure of a tension-torsion (TT) strap, loss of a main rotor blade (blade), and subsequent loss of control of the helicopter, accomplish the following:

(a) Before further flight:

(1) Remove TT straps, part number (P/N) 2604067 (Bendix) or J17322–1 (Lord), from service or re-identify them as P/N 117–14110 or 117–14111, respectively, in accordance with the Accomplishment Instructions, paragraph 2.B.1.2., Eurocopter Deutschland GMBH Alert Service Bulletin BO 105 No. ASB–BO 105–10–113, Revision 2, dated November 16, 1999 (ASB). TT straps, P/N 2604067 (Bendix) or J17322–1 (Lord), are no longer eligible for installation.

(2) Create a component log card or equivalent record for each TT strap.

(3) Review the history of the helicopter and each TT strap. Determine the age since initial installation on any helicopter (age) and the number of flights on each TT strap. Enter both the age and the number of flights for each TT strap on the component log card or equivalent record. When the number of flights is unknown, multiply the number of hours time-in-service (TIS) by 5 to determine the number of flights.

(4) Remove any TT strap from service if the total hours TIS or number of flights and age cannot be determined.

(b) Before further flight, remove any TT strap, P/N 117–14110 or 117–14111, that has been in service 120 months since initial installation on any helicopter or accumulated 25,000 flights (a flight is a takeoff and a landing). Replace the TT strap with an airworthy TT strap.

(c) This AD revises the Airworthiness Limitations Section of the maintenance manual by establishing a life limit for the TT strap, P/N 117–14110 and 117–14111, of 120 months or 25,000 flights, whichever occurs first.

(d) An alternative method of compliance or adjustment of the compliance time that provides an acceptable level of safety may be used if approved by the Manager, Regulations Group, Rotorcraft Directorate, FAA. Operators shall submit their requests through an FAA Principal Maintenance Inspector, who may concur or comment and then send it to the Manager, Regulations Group.

Note 2: Information concerning the existence of approved alternative methods of compliance with this AD, if any, may be obtained from the Regulations Group.

(e) Special flight permits may be issued in accordance with sections 21.197 and 21.199 of the Federal Aviation Regulations (14 CFR 21.197 and 21.199) to operate the helicopter to a location where the requirements of this AD can be accomplished.

Note 3: The subject of this AD is addressed in the Luftfahrt Bundesamt (Federal Republic of Germany) AD 1999–289/2, dated September 1, 1999.

Issued in Fort Worth, Texas, on September 13, 2000.

Eric Bries,

Acting Manager, Rotorcraft Directorate, Aircraft Certification Service.

[FR Doc. 00–24115 Filed 9–19–00; 8:45 am]

BILLING CODE 4910–13–U

DEPARTMENT OF TRANSPORTATION

Federal Aviation Administration

14 CFR Part 39

[Docket No. 2000–NE–26–AD]

RIN 2120–AA64

Airworthiness Directives; Pratt & Whitney Canada PT6A–25C and –114A Series Turboprop Engines

AGENCY: Federal Aviation Administration, DOT.

ACTION: Notice of proposed rulemaking (NPRM).

SUMMARY: This document proposes the adoption of a new airworthiness directive (AD) that is applicable to Pratt & Whitney Canada (P&WC) PT6A–25C and –114A turboprop engines. This proposal would require initial and repetitive visual inspections, and eventual replacement of the compressor bleed valve assembly, with a redesigned valve assembly for the –114A engines, and initial and repetitive visual inspections only for –25C engines. This proposal is prompted by reports of two occurrences of uncommanded engine power loss. The actions specified by the proposed AD are intended to detect wear in the compressor bleed valve assembly which may cause valve orifice blockage, resulting in a loss of power, inability of engine acceleration, and in-flight shut down.

DATES: Comments must be received by November 20, 2000.

ADDRESSES: Submit comments to the Federal Aviation Administration (FAA), New England Region, Office of the Regional Counsel, Attention: Rules Docket No. 2000–NE–26–AD, 12 New England Executive Park, Burlington, MA 01803–5299. Comments may also be sent via the Internet using the following address: ''9–ane–adcomment@faa.gov''. Comments sent via the Internet must contain the docket number in the subject line. Comments may be inspected at this location between 8:00 a.m. and 4:30 p.m., Monday through Friday, except Federal holidays.

The service information referenced in the proposed rule may be obtained from Pratt & Whitney Canada, 1000 Marie-Victorin, Longueuil, Quebec, Canada J4G1A1. This information may be examined at the FAA, New England Region, Office of the Regional Counsel, 12 New England Executive Park, Burlington, MA.

FOR FURTHER INFORMATION CONTACT: James Rosa, Aerospace Engineer, Engine Certification Office, FAA, Engine and Propeller Directorate, 12 New England Executive Park, Burlington, MA 01803–5299; telephone: (781) 238–7152, fax: (781) 238–7199.

SUPPLEMENTARY INFORMATION: This proposal would require initial and repetitive visual inspections, and replacement if necessary, of certain compressor bleed valve assembly components on PT6A–25C and –114A turboprop engines, in accordance with P&WC Service Bulletin (SB) No. 1574 Revision 2, dated October 14, 1999. This proposal would also require eventual replacement of compressor bleed valve assemblies with redesigned valve assemblies, on PT6A–114A turboprop engines, in accordance with P&WC SB No. 1588, dated February 18, 2000.

Comments Invited

Interested persons are invited to participate in the making of the proposed rule by submitting such written data, views, or arguments as they may desire. Communications should identify the Rules Docket number and be submitted to the address specified above. All communications received on or before the closing date for comments, specified above, will be considered before taking action on the proposed rule. The proposals contained in this notice may be changed in light of the comments received.

Comments are specifically invited on the overall regulatory, economic, environmental, and energy aspects of the proposed rule. All comments submitted will be available, both before and after the closing date for comments, in the Rules Docket for examination by interested persons. A report summarizing each FAA-public contact concerned with the substance of this proposal will be filed in the Rules Docket.

Commenters wishing the FAA to acknowledge receipt of their comments submitted in response to this notice must submit a self-addressed, stamped postcard on which the following statement is made: ''Comments to Docket Number 2000–NE–26–AD.'' The postcard will be date stamped and returned to the commenter.

Availability of NPRM's

Any person may obtain a copy of this NPRM by submitting a request to the FAA, New England Region, Office of the Regional Counsel, Attention: Rules Docket No. 2000–NE–26–AD, 12 New England Executive Park, Burlington, MA 01803–5299.

Discussion

Transport Canada (TC), which is the airworthiness authority for Canada, recently notified the FAA that an unsafe condition may exist on P&WC PT6A–25C and –114A series turboprop engines, which are installed on but not limited to Pilatus PC–7 and Cessna 208 Caravan airplanes. TC advises that engines, which have incorporated P&WC SB No. 1510, may experience cotter pin and diaphragm wear and fatigue inside the compressor bleed valve assembly. Separation of sections of the cotter pin and particles from diaphragm wear may cause blockage of one or both valve orifices, resulting in a power loss, inability of the engine to accelerate and/or in-flight shut down. P&WC has issued SB No. 1574, Revision 2, dated October 14, 1999, which specifies initial visual inspection of compressor bleed valve assembly cover, guide pin shaft, cotter pin, and diaphragm for wear, and, replacement of these parts if necessary. TC classified this SB as mandatory by issuing AD No. CF–99–23, dated September 14, 1999 in order to assure the continued airworthiness of these airplanes in Canada. P&WC has also issued SB No. 1588, dated February 18, 2000, for PT6A–114A turboprop engines that specify compressor bleed valve assembly replacement with a redesigned valve assembly.

Bilateral Airworthiness Agreement

These engine models are manufactured in Canada and are type certificated for operation in the United States under the provisions of § 21.29 of Title 14 of the Code of Federal Regulations (14 CFR 21.29) and the applicable bilateral airworthiness agreement. Pursuant to this bilateral airworthiness agreement, Transport Canada has kept the FAA informed of the situation described above. The FAA has examined the findings of Transport Canada, reviewed all available information, and determined that AD action is necessary for products of this type design that are certificated for operation in the United States.

Proposed Actions

Since an unsafe condition has been identified that is likely to exist or develop on other engines of the same type design registered in the United States, the proposed AD would require initial visual inspection of certain compressor bleed valve assembly components within 150 flight hours after the effective date of this AD, repetitive visual inspections within 600 flight hours after the last inspection, and if necessary, the replacement of certain components. The proposed AD would also require replacement of compressor bleed valve assemblies on PT6A–114A engines which have had Pratt & Whitney Canada SB No. 1510 incorporated, with a redesigned valve assembly at the next shop visit but no later than five years after the effective date of this AD. The actions would be required to be accomplished in accordance with the SB's described previously.

Economic Impact

There are about 504 engines of the affected design in the worldwide fleet. The FAA estimates that 353 engines installed on aircraft of U.S. registry would be affected by this proposed AD, that it would take about 2 work hours per engine to accomplish the initial inspections, and 1 hour to accomplish the replacement of the valve, and that the average labor rate is $60 per work hour. Required parts would cost about $7,458.00 per engine. Based on these figures, the total cost impact of the proposed AD on U.S. operators is estimated to be $2,696,214.00.

Regulatory Impact

This proposal does not have federalism implications, as defined in Executive Order 13132, because it would not have a substantial direct effect on the States, on the relationship between the national government and the States, or on the distribution of power and responsibilities among the various levels of government. Accordingly, the FAA has not consulted with state authorities prior to publication of this proposal.

For the reasons discussed above, I certify that this proposed regulation (1) is not a ''significant regulatory action'' under Executive Order 12866; (2) is not a ''significant rule'' under the DOT Regulatory Policies and Procedures (44 FR 11034, February 26, 1979); and (3) if promulgated, will not have a significant economic impact, positive or negative, on a substantial number of small entities under the criteria of the Regulatory Flexibility Act. A copy of the draft regulatory evaluation prepared for this action is contained in the Rules Docket. A copy of it may be obtained by contacting the Rules Docket at the location provided under the caption **ADDRESSES.**

List of Subjects in 14 CFR Part 39

Air transportation, Aircraft, Aviation safety, Safety.

The Proposed Amendment

Accordingly, pursuant to the authority delegated to me by the Administrator, the Federal Aviation Administration proposes to amend part 39 of the Federal Aviation Regulations (14 CFR part 39) as follows:

PART 39—AIRWORTHINESS DIRECTIVES

1. The authority citation for part 39 continues to read as follows:

Authority: 49 U.S.C. 106(g), 40113, 44701.

§ 39.13 [Amended]

2. Section 39.13 is amended by adding the following new airworthiness directive:

Pratt & Whitney Canada: Docket No. 2000–NE–26–AD.

Applicability: This airworthiness directive (AD) applies to PT6A–25C and –114A Series turboprop engines, installed on but not limited to the following airplanes: Pilatus PC–7, Cessna 208 Caravan.

Note 1: This airworthiness directive (AD) applies to each engine identified in the preceding applicability provision, regardless of whether it has been modified, altered, or repaired in the area subject to the requirements of this AD. For engines that have been modified, altered, or repaired so that the performance of the requirements of this AD is affected, the owner/operator must request approval for an alternative method of compliance in accordance with paragraph (e) of this AD. The request should include an assessment of the effect of the modification, alteration, or repair on the unsafe condition addressed by this AD; and, if the unsafe condition has not been eliminated, the request should include specific proposed actions to address it.

Compliance: Required as indicated, unless accomplished previously.

Initial and Repetitive Inspections

To detect wear on the compressor bleed valve assembly cover, guide pin shaft, cotter pin, and to detect particles from diaphragm wear, which may cause blockage of one or both valve orifices, resulting in a loss of power, inability of the engine to accelerate, and/or in-flight shut down, accomplish the following:

(a) Perform an initial visual inspection of the compressor bleed valve assembly components within 150 flight hours after the effective date of this AD in accordance with Accomplishment Instructions, Section 3A through 3B of Pratt & Whitney Canada (P&WC) Service Bulletin (SB) No. 1574 Revision 2, dated October 14, 1999.

(b) Thereafter, perform repetitive visual inspections of the compressor bleed valve assembly components within 600 flight hours after the last inspection in accordance with Accomplishment Instructions, Section 3A through 3B of Pratt & Whitney Canada (P&WC) Service Bulletin (SB) No. 1574 Revision 2, dated October 14, 1999.

Terminating Action

(c) For PT6A–114A series turboprop engines, replacement of compressor bleed valve assemblies at the next shop visit, with the redesigned valve assembly, in accordance with P&WC SB No. 1588, dated February 18, 2000, is considered terminating action for the repetitive inspection. This action must be done at the next shop visit but no later than five years from the effective date of this AD.

Definition

(d) For the purpose of this AD: A shop visit is defined as when the subassembly (i.e. module, accessories, components or build groups) is disassembled and access is available to the compressor bleed valve assembly.

Alternative Methods of Compliance

(e) An alternative method of compliance or adjustment of the compliance time that provides an acceptable level of safety may be used if approved by the Manager, Engine Certification Office (ECO). Operators shall submit their request through an appropriate FAA Principal Maintenance Inspector, who may add comments and then send it to the Manager, ECO.

Note 2: Information concerning the existence of approved alternative methods of compliance with this airworthiness directive, if any, may be obtained from the ECO.

Special Flight Permits

(f) Special flight permits may be issued in accordance with sections 21.197 and 21.199 of the Federal Aviation Regulations (14 CFR 21.197 and 21.199) to operate the aircraft to a location where the requirements of this AD can be accomplished.

Issued in Burlington, Massachusetts, on September 13, 2000.

David A. Downey,

Assistant Manager, Engine and Propeller Directorate, Aircraft Certification Service.

[FR Doc. 00–24114 Filed 9–19–00; 8:45 am]

BILLING CODE 4910–13–P

TENNESSEE VALLEY AUTHORITY

18 CFR Part 1304

Approval of Construction in the Tennessee River System; Regulation of Structures; Residential Related Use on TVA-Controlled Residential Access Shoreline and TVA Flowage Easement Shoreline

AGENCY: Tennessee Valley Authority (TVA).

ACTION: Proposed rule.

SUMMARY: TVA is today proposing to amend its regulations under section 26a of the TVA Act governing the construction, operation, or maintenance of any dam, appurtenant works, or other obstruction affecting navigation, flood control, or public lands or reservations along or in the Tennessee River or any of its tributaries. The amendments would generally update the existing section 26a regulations to include new sections governing underground and aboveground storage tanks, marina sewage pump-out stations and holding tanks, wastewater outfalls and septic systems, development within flood control storage zones of TVA reservoirs, and requests for waivers or variances. The sections governing the application process and the handling of appeals would be revised for clarity. The rules for nonnavigable houseboats would be clarified, and a provision would be added governing sanitation for nonnavigable houseboats. In addition, new subparts would be added to implement TVA's recently-adopted ''Shoreline Management Initiative'' policy.

DATES: Written comments on these proposed rules will be accepted until November 20, 2000.

ADDRESSES: Written comments on the substance of the rulemaking should be addressed to Robert L. Curtis, Specialist-Land Policy, Resource Stewardship, Tennessee Valley Authority, Post Office Box 1589, 17 Ridgeway Road, Norris, Tennessee 37828. Electronic comments may be submitted to rlcurtis@tva.gov. Paperwork Reduction Act comments should be addressed as explained below.

FOR FURTHER INFORMATION CONTACT: Robert L. Curtis, (865) 632–1552.

SUPPLEMENTARY INFORMATION:

I. Legal Authority

These regulations are proposed under the authority of section 26a of the Tennessee Valley Authority Act of 1933 (16 U.S.C. 831y–1), and TVA's property rights under certain deeds and flowage easement instruments.

II. Background

Section 26a of the TVA Act provides that no dam, appurtenant works, or other obstruction affecting navigation, flood control or public lands or reservations shall be constructed, and thereafter operated or maintained across, along, or in the Tennessee River system or any of its tributaries until the plans for such construction, operation, or maintenance shall have been submitted to and approved by the TVA Board of Directors, or its delegate. Commencement of construction, operation, or maintenance of such structures without such approval is prohibited.

On October 22, 1971, TVA promulgated regulations setting forth the approval process and establishing a number of policies regarding the exercise of TVA's section 26a authority. The regulations have since been amended from time to time. This proposed rulemaking would further amend the existing regulations by adding new sections regarding underground and aboveground storage tanks, marina sewage pump-out stations and holding tanks, wastewater outfalls and septic systems, and development within flood control storage zones of TVA reservoirs. A new section providing for the handling of requests for waivers or variances would be added, and the sections governing the application process and the handling of appeals would be revised for clarity.

TVA also proposes to add new subparts C and D regarding residential-related use of TVA-controlled residential access shoreline and TVA flowage easement shoreline. The rules contained in these subparts would implement the ''Shoreline Management Initiative'' policy adopted by TVA's Board of Directors on April 21, 1999. Through these rules, TVA would promote the conservation of shoreline resources to provide public use opportunities and protect environmentally sensitive resources, while also accommodating access to the shore by adjacent residents.

III. Detailed Analysis of Proposed Rule

A. Approval of Construction

Today's proposal would make minor revisions to the existing process for obtaining approvals required under section 26a of the TVA Act. This subpart would apply to all cases involving an obstruction subject to section 26a approval or otherwise requiring TVA approval under these rules (including, among other things, TVA-owned residential access shoreland uses described in proposed subpart C and certain uses of TVA flowage easement property under proposed subpart D).

1. *Scope and intent.* This section (§ 1304.1) sets forth the authorities for and the purposes of TVA's regulation of structures in the Tennessee River system and activities on land in which TVA has a property interest. Part 1304 is generally applicable to all obstructions in the river system and to activities conducted on reservoir-related property in TVA's custody or subjects to TVA flowage easements.

2. *Application.* If the rule is amended as proposed, section 26a facilities would, for purpose of the application process and certain other purposes, be divided into ''minor'' and ''major'' facilities. Applicants for minor facilities would have to include less information with their applications. Nonexclusive examples of minor and major facilities are provided in the proposed rule. TVA believes that in most cases it will be readily apparent whether a facility should be classified as minor or major. Generally, it is TVA's intention that most residential related facilities for individual use would be minor facilities. For application purposes, a request for a variance to the size limitations for a residential-related facility would be regarded as an application for a ''major'' facility. Commercial or community facilities likely would be much larger than individual facilities and usually would be classified as major. TVA would encourage applicants to inquire in advance for guidelines in cases where it may not be clear whether a proposed facility would be minor or major.

3. *Delegation of Authority and Application Review and Approval Process.* The rule would be revised to reflect the current organizational structure of TVA. The information required to be included with applications for each type of facility would be specified. The procedures for TVA's consideration of applications, including the procedures applicable to hearings and appeals, would be clarified.

B. Regulation of Nonnavigable Houseboats

The regulation governing nonnavigable houseboats would be

revised to better distinguish between navigable and nonnavigable houseboats and to more clearly specify where nonnavigable houseboats may be moored. A provisions governing sanitation would be added. As in the current rule, no new nonnavigable houseboats would be allowed.

C. Residential-Related Use of TVA-Controlled Residential Access Shoreline

Today's proposal contains a new subpart (subpart C) regarding residential-related use of TVA-controlled residential access shoreline.

1. *Applicability.* This subpart addresses access across, and construction of facilities and vegetation management on, three categories of TVA-owned shoreland property by adjacent upland residential landowners (for ease of reference, property owned by the United States and under the custody and control of TVA is referred to in this preamble and throughout the proposed rule as ''TVA-owned''):

- TVA-owned shorelands over which the adjacent upland residential landowners hold deeded rights of ingress and egress for access to the water (except where a particular activity is excluded by the deed language) and/or the right to apply to construct water-use facilities.
- TVA-owned shorelands designated in current, approved TVA Reservoir Land Management Plans as open for consideration of residential shoreline development.
- On reservoirs not having a current, approved TVA Reservoir Land Management Plan at the time of application, TVA-owned shorelands designated in TVA's property forecast system as ''reservoir operations property,'' identified in a subdivision plat recorded prior to September 24, 1992, and containing at least one water-use facility developed prior to September 24, 1992.

Subpart C would apply only to TVA-owned property adjacent to reservoirs. It would not apply to land adjacent to a free-flowing river—whether or not TVA-owned. Obstructions on land adjacent to a free-flowing river would be regulated under amended subparts A, B, and E; if TVA owns the property, construction of facilities and vegetation management on, and access across such land would be controlled by TVA on a case-by-case basis. Subparts C and D would not apply to commercial marinas or other commercial facilities. Such facilities would be regulated in accordance with subparts A, B, and E, and, where TVA has a property interest, in accordance with the full exercise of TVA's rights under such interest.

No residential-related obstructions, shoreline structures, access corridors, or vegetation management activities would be allowed on any TVA-owned reservoir land not included in one of the three categories specified in the proposed rule.

2. *Vegetation Management.* It is expected that requests for permission to manage vegetation on TVA-owned lands would, for the most part, be made in conjunction with a request to construct a dock or other obstruction under section 26a. However, adjacent upland residential landowners may wish to engage in vegetation management activities on TVA-owned lands without constructing any facility regulated under section 26a. In such circumstances, the proposed rules would still require the adjacent landowner to apply for and obtain a permit before engaging in any vegetation management on TVA-owned lands.

3. *Docks, Piers, and Other Water-Use Facilities.* Under the proposed rule, adjacent property owners would be responsible for submitting drawings of proposed facilities for TVA review and approval to ensure that the applicable standards would be met and that the facility would otherwise be consistent with TVA's management of the Tennessee River system. To provide design suggestions for private water-use facilities, TVA makes available sample drawings for docks, piers, and boatslips. Adjacent property owners may use these drawings or create their own drawings reflecting their design preferences in a way that meets TVA's size and construction requirements.

Standards for the size and type of docks permitted by TVA help to avoid the construction of structures that obstruct or otherwise have an adverse impact on boating access into coves or along the shore. They also help to limit obstructions to visibility. The proposed dock standards are designed in a way that numerous different shapes, sizes, and combinations of facilities could be built. The standards are designed to define the maximum size of docks and other water-use facilities that are approvable by TVA. Unless there are environmental resources that must be avoided, navigation restrictions, or physical site constraints such as a narrow cove, decisions about the size and type of docking facilities to be built would be made by the applicant, provided the maximum standards are not exceeded. When site constraints preclude the building of maximum-size facilities, TVA would determine if a smaller facility could be approved and, if so, what size facility would be allowed.

4. *Group and Community Water-Use Facilities.* TVA recognizes that subdivision developers or chartered homeowner's associations may wish to develop group or community water-use facilities on a community lot or other site. In such cases, some deviation from the requirements applicable to individual adjacent upland landowners may be appropriate. Generally, where individual upland landowners have deeded ingress and egress rights, they may apply to construct individual water-use facilities and undertake vegetation management activities even though a community facility has been approved.

5. *Channel Excavation on TVA-Owned Residential Access Shoreland.* The standards for channel excavation are designed to minimize impacts upon water quality and aquatic communities and avoid obstructions that would adversely affect navigation or flood control.

6. *Shoreline Stabilization.* TVA generally will allow homeowners to choose between riprap, biostabilization, gabions, retaining walls, or a combination of the four approaches for erosion control. Retaining walls are not a favored method of treating shoreline erosion. They typically require extensive site disturbance during construction, which can destroy fish spawning and feeding areas. Their vertical surface does not provide desirable aquatic habitat conditions, and they often fail because of improper design, causing further site disturbance. As requested by the homeowner, TVA may assess shoreline erosion conditions and advise whether biostabilization, riprap, gabions, retaining walls, or some combination of these treatment methods would be most appropriate.

D. Activities on TVA Flowage Easement Shoreland

This subpart governs use of privately-owned shorelands where TVA has acquired flowage easements and thus has the right to flood the land as part of its reservoir operations. TVA's authority with respect to such lands stems from its authority under section 26a of the TVA Act and the rights accorded to TVA under the flowage easement documentation. Under the proposed rule, TVA generally would apply to flowage easement lands the same standards regarding docks, piers, and other water-use facilities, shoreline stabilization, fish attractors, and channel excavation (to the extent it creates an obstruction regulated under section 26a) as would be applicable to residential-related use of TVA-controlled residential access shoreline.

Decisions about vegetation management and any other activities not subject to regulation under section 26a or prevented or regulated by the terms of the flowage easement would be made by the landowner. Subpart D specifically identifies the sections of subpart C that are applicable to flowage easement shoreland.

E. Miscellaneous

This subpart contains rules of general applicability and other miscellaneous provisions. To the extent anything contained in this subpart may be inconsistent with the standards set forth in subparts C and D, those subparts shall take precedence on the lands to which they apply.

1. *Definitions.* A number of new definitions would be added to improve clarity.

2. *Flotation Devices and Materials.* The proposed rule (§ 1304.401) would impose minimum specifications for flotation devices associated with docks, boat mooring buoys, and other water-use structures and facilities.

3. *Discharges From Houseboats, Watercraft, and Floating Structures.* This section (§ 1304.402) would continue the existing prohibition against the mooring over TVA land of any watercraft or floating structure equipped with a marine sanitation device unless such device is in compliance with all applicable requirements.

4. *Wastewater Outfalls and Septic Systems.* New § 1304.403 would require facilities required to have a wastewater permit to obtain such permit before a section 26a permit would be issued. Septic tank systems where any portion of the system is located on TVA flowage easement property would be subject to permitting requirements and certain specified standards. No portion of any septic tank system would be allowed on TVA-owned shoreland property.

5. *Marina Sewage Pump-out Stations and Holding Tanks.* The proposed rule would establish minimum design and operating requirements for new marina sewage pump-out stations and holding tanks (§ 1304.404). Other Federal, State, or local laws or rules may require installation of such facilities or otherwise regulate them in some circumstances.

6. *Fuel Storage Tanks and Handling Facilities.* The proposed regulations (§ 1304.406) would establish minimum requirements for the installation of underground and aboveground storage tanks in connection with commercial facilities subject to TVA approval. TVA is considering new requirements for fuel handling piping systems associated with storage tanks and for fuel containment provisions at fuel pumps located on commercial docks, piers, and marinas. Generally, except in unusual circumstances where there is no other practicable solution, TVA does not approve storage tanks on TVA lands. Tanks must be located on land owned by the applicant. Also, TVA would not approve fuel handling facilities of any kind on private non-commercial docks, piers, and boathouses.

7. *Development Within Flood Control Storage Zones of TVA Reservoirs.* A new section (§ 1304.408) imposing certain requirements when a project would result in a loss of flood control storage would be added.

8. *Request for Waiver or Variance.* A new section (§ 1304.409) would establish a mechanism for requesting a waiver of or variance from a provision of the rules. Good cause would be required for approval of such requests, and approval or disapproval would be at the sole discretion of the Vice President, Resource Stewardship, TVA.

IV. Compliance With Other Laws

A. Unfunded Mandates Reform Act

The proposed rule contains no Federal mandates for State, local, and tribal Governments or the private sector. Rather, it simply codifies policies and requirements regarding the use of TVA land and the size, type, and use of obstructions to be allowed in the Tennessee River. In addition, any expenditures by State, local and tribal governments or the private sector in connection with the rule would be substantially less than $100 million in any one year.

B. Regulatory Flexibility Act

This proposed action will not have a significant economic impact on a substantial number of small entities. There will be no significant economic impact from the amendments since the proposed rule would not significantly add to the costs of one who chooses to use TVA land or construct an obstruction in the Tennessee River system. Existing obstructions that are or could be permitted under current regulations would not have to be modified to conform to new standards.

Any economic impact that would occur as a result of the proposed rule would not affect a substantial number of small entities because TVA only processes about 300 applications annually for nonresidential facilities.

C. Environmental Review

TVA prepared a detailed draft environmental impact statement (EIS) assessing residential shoreline development impacts in the Tennessee Valley. Copies of the Executive Summary and/or draft EIS were distributed to numerous State agencies and public libraries in the Tennessee Valley and to approximately 8,000 interested individuals. Sixteen public meetings were held, and numerous oral and written comments were received and considered. A final EIS adopting the residential access policies that would be implemented by these rules has been released, and a record of decision has been issued. This proposed rulemaking reflects the involvement of the interested public during the environmental review process. An Environmental Assessment is being prepared for those aspects of the proposed rule not addressed in the residential shoreline development EIS.

D. Paperwork Reduction Act

The information collection requirements in this proposed rule have been submitted for approval of the Office of Management and Budget (OMB) under the Paperwork Reduction Act, 44 U.S.C. § 3501 *et seq.* An Information Collection Request (ICR) document has been prepared by TVA, and a copy may be obtained from Wilma H. McCauley, Agency Clearance Officer, Tennessee Valley Authority, 1101 Market Street (WR 4Q), Chattanooga, Tennessee 37402–2801 or by calling (423) 751–2523.

The only information collection activity contained in the proposed rule is a requirement that persons seeking approval to construct an obstruction along or in the Tennessee River system or authorization to use certain property under TVA's control submit an application to TVA. The application consists of an application form plus, in the case of an obstruction, detailed plans, maps, and other information necessary for TVA to evaluate the request for approval. The estimated time to complete the application form and prepare the supplemental material is 1.5 hours. The time may vary depending upon the nature and complexity of the proposed action.

Comments are requested on TVA's need for this information, the accuracy of the provided burden estimates, and any suggestions for minimizing respondent burden. Send comments on the ICR to the Agency Clearance Officer, Tennessee Valley Authority, 1101 Market Street (WR 4Q), Chattanooga, Tennessee 37402–2801; and to the Officer of Information and Regulatory Affairs, Office of Management and Budget, 725 17th Street, NW., Washington, DC 20503, marked ''Attention: Desk Officer for Tennessee

Valley Authority.'' Include the ICR number in any correspondence. Comments should be received by OMB no later than thirty (30) days after the date of public of this proposed rule. The final rule will respond to any OMB or public comments on the information collection requirements contained in this proposal.

List of Subjects in 18 CFR Part 1304

Administrative practice and procedure, Natural resources, Navigation (water), Rivers, Water pollution control.

For the reasons set forth in the preamble, title 18, chapter XIII of the Code of Federal Regulations is amended by revising part 1304 to read as follows:

PART 1304—APPROVAL OF CONSTRUCTION IN THE TENNESSEE RIVER SYSTEM AND REGULATION OF STRUCTURES

Subpart A—Procedures for Approval of Construction

Sec.
1304.1 Scope and intent.
1304.2 Application.
1304.3 Delegation of authority.
1304.4 Application review and approval process.
1304.5 Conduct of hearings.
1304.6 Appeals.
1304.7 Conditions of approvals.
1304.8 Denials.
1304.9 Initiation of construction.
1304.10 Change in ownership of approved structures.
1304.11 Little Tennessee River; date of formal submission.

Subpart B—Regulation of Nonnavigable Houseboats

1304.100 Scope and intent.
1304.101 Nonnavigable houseboats.
1304.102 Numbering of nonnavigable houseboats and transfer of ownership.
1304.103 Approval of plans for structural modifications or rebuilding of approved nonnavigable houseboats.

Subpart C—TVA Owned Residential Access Shoreland

1304.200 Scope and intent.
1304.201 Applicability.
1304.202 General sediment and erosion control provisions.
1304.203 Vegetation management.
1304.204 Dock, piers, and boathouses.
1304.205 Other water-use facilities.
1304.206 Requirements for community dock, pier, boathouse, or other water-use facilities.
1304.207 Channel excavation on TVA-owned residential access shoreland.
1304.208 Shoreline stabilization.
1304.209 Fish attractor, spawning, and habitat structures.
1304.210 Land-based structures/alterations.
1304.211 Grandfathering of preexisting shoreline uses and structures.
1304.212 Change in ownership of grandfathered structures or alterations.
1304.213 Waivers on TVA-owned residential access shoreland.
1304.214 Numbering of structures.

Subpart D—Activities On TVA Flowage Easement Shoreline

1304.300 Scope and intent.
1304.301 Septic tanks.
1304.302 Utilities.
1304.303 Vegetation management on flowage easement shoreline.
1304.304 Channel excavation.

Subpart E—Miscellaneous

1304.400 Definitions.
1304.401 Flotation devices and material, all floating structures.
1304.402 Marine sanitation devices.
1304.403 Wastewater outfalls; septic tanks.
1304.404 Marina sewage pump-out stations and holding tanks.
1304.405 Commercial marina harbor limits.
1304.406 Fuel storage tanks and handling facilities.
1304.407 Removal of unauthorized, unsafe, and derelict structures.
1304.408 Development within flood control storage zones of TVA reservoirs.
1304.409 Variances.
1304.410 Indefinite or temporary moorage of recreational vessels.
1304.411 Navigation restrictions.

Authority: 16 U.S.C. 831–831ee.

Subpart A—Procedures for Approval of Construction

§ 1304.1 Scope and intent.

The Tennessee Valley Authority Act of 1933 among other things confers on TVA broad authority related to the unified conservation and development of the Tennessee River Valley and surrounding area and directs that property in TVA's custody be used to promote the Act's purposes. In particular, section 26a of the Act requires that TVA's approval be obtained prior to the construction, operation, or maintenance of any dam, appurtenant works, or other obstruction affecting navigation, flood control, or public lands or reservations along or in the Tennessee River or any of its tributaries. By way of example only, such obstructions may include boat docks, piers, boathouses, buoys, floats, boat launching ramps, fills, water intakes, devices for discharging effluent, bridges, aerial cables, culverts, pipelines, and nonnavigable houseboats as defined in § 1304.101. Any person considering constructing, operating, or maintaining any such structure on a stream in the Tennessee River Watershed should carefully review the regulations in this part and the 26a Applicant's Package before doing so. The regulations also apply to certain activities on land subject to TVA flowage easements. TVA uses and permits use of the lands and land rights in its custody alongside and subjacent to TVA reservoirs and exercises its land rights to carry out the purposes and policies of the Act. in addition, the National Environmental Policy Act of 1969, as amended (NEPA), 42 U.S.C. 4321 *et seq.* and the Federal Water Pollution Control Act Amendments of 1972, 33 U.S.C. 1251 *et seq.* (FWPCA), have declared it to be congressional policy that agencies should administer their statutory authorities so as to restore, preserve, and enhance the quality of the environment and should cooperate in the control of pollution. It is the intent of the regulations in this part 1304 to carry out the purposes of the Act and other statutes relating to these purposes, and this part shall be interpreted and applied to that end.

§ 1304.2 Application.

(a) Applications shall be addressed to the Tennessee Valley Authority, Land Management Office, at one of the following locations:

(1) 17 Ridgeway Road, Norris, TN 37828, (865) 632–1691, Reservoir: Norris

(2) Suite 300, 804 Highway 321, North, Lenoir City, TN 37771–6440, (865) 988–2431, Reservoirs: Ft. Loudoun, Tellico, Fontana

(3) 221 Old Ranger Road, Murphy, NC 28906, (704) 837–0237, Reservoirs: Hiwassee, Chatuge, Appalachia, Blue Ridge Nottely, Ocoee

(4) 2611 W. Andrew Johnson Hwy., Morristown, TN 37814–3295, (865) 632–2753, Reservoirs: Cherokee, Douglas

(5) Reservoir Road, P.O. Box 1010, Muscle Shoals, AL 35662–1010, (256) 386–2564, Reservoirs: Wheeler, Wilson, Tims Ford, Great Falls

(6) 202 West Blythe Street, P.O. Box 280, Paris, TN 38242, (901) 642–2041, Reservoirs: Kentucky, Beech River, Columbia, Normandy

(7) P.O. Box 1010, Muscle shoals, AL 35662–1010, (256) 386–3782, Reservoirs: Pickwick, Bear Creek

(8) Suite 218, Heritage Federal Bank Building, 4105 Fort Henry Drive, Kingsport, TN 37662, (423) 239–2001, Reservoirs: Boone, Watauga, Wilbur, Fort Patrick Henry, South Holston

(9) 4833 Highway 58, Chattanooga, TN 37416, (423) 954–3811, Reservoirs: Chickamauga, Nickajack

(10) 2009 Grubb Road, Lenoir City, TN 37771–6440, (865) 988–2445, Reservoirs: Watts Bar, Melton Hill

(11) 2325 Henry Street, Guntersville, AL 35976–1868, (256) 571–4283, Reservoirs: Guntersville

(b) *Submittal of Section 26a Application.* Applicants must submit certain required information depending upon whether a proposed facility is a minor or major facility. Examples of the two categories are provided in paragraphs (b)(1) and (2) of this section. Most residential related facilities are minor facilities. Commercial or community facilities generally are major facilities. TVA shall determine whether a proposed facility is minor or major. An application shall not be complete until payment of the appropriate fee as determined in accordance with 18 CFR part 1310, and disclosed to the applicant in the materials provided with the application package or by such other means of disclosure as TVA shall from time to time adopt. For purposes of the information required to be submitted under this section and the determination of fees, a request for a variance to the size limitations for a residential-related facility shall be regarded as an application for a major facility.

(1) *Information required for review of minor facility.* By way of example only, minor facilities may include: boat docks, piers, rafts, boathouses, fences, steps, gazebos, and shoreline-based shelters. One copy of the application shall be prepared and submitted in accordance with the instructions included in the section 26a Applicant's Package. The application shall include:

(i) *Completed application form.* One (1) copy of the application shall be prepared and submitted. Application forms are available from TVA at the locations identified at the beginning of this section. The application shall include a project description which indicates what is to be built, removed, or modified, and the sequence of the work.

(ii) *Project, plan, or drawing.* The project plan/drawing shall:

(A) Be prepared on paper suitable for reproduction (8½ by 11 inches);

(B) Identify the kind of structure, purpose/intended use;

(C) Show principal dimensions, size, and location in relation to shoreline;

(D) Shoe the height of the structure above the water; and

(E) Indicate the river or reservoir name, river mile, locator landmarks, and direction of water flow if known.

(iii) *A site photograph.* The photograph shall be at least 3 by 5 inches in size and show the location of the proposed shoreline structure or alteration and the adjacent shoreline area.

(iv) *Location map.* The location map shall clearly show the location of the proposed facility and the extent of any site disturbance for the proposed project. An 8½ by 11-inch copy of one of the following is ideal: a TVA land map, a subdivision map, or a portion of a United States Geological Survey topographic map. The subdivision name and lot number and the map number or name shall be included, if available.

(2) *Information required for a major facility.* One (1) copy of the application shall be prepared and submitted according to instructions included in the section 26a Applicant's Package. By way of example only, major projects and facilities may include: marinas, community docks, barge terminals, utility crossing, bridges, culverts, roads, wastewater discharges, water intakes, dredging, and placement of fill. The application shall include:

(i) *Completed application form.* Application forms are available from TVA at the locations identified at the beginning of this section. The application shall include a narrative project description which indicates what is to be built, removed, or modified, and the sequence of the work.

(ii) *Project plan or drawing.* Adequate project plans or drawings shall accompany the application. They shall:

(A) Be prepared on paper suitable for reproduction (no lager than 11 by 17 inches) or contained on a 3½-inch floppy disc in ''dxf'' format.

(B) Contain the date; applicant name; stream; river or reservoir name; river mile; locator landmarks; and direction of water flow, if known;

(C) Identify the kind of structure, purpose/intended use;

(D) Include a plan and profile view of the structure;

(E) Show principal dimensions, size, and location in relation to shoreline;

(F) Show elevations (in context of normal summer pool if on a reservoir, or normal high water elevation above mean sea level if located on a free-flowing stream or river); and

(G) Show the north arrow.

(iii) *Location map.* The location map must clearly indicate the exact location and extent of site disturbance for the proposed project. An 8½ by 11-inch copy of the appropriate portion of a United States Geological Survey topographic map is recommended. The map number or name shall be included. In addition, recent photos of the location are helpful for TVA's review and may be included.

(iv) *Other information where applicable.* The location of any material laydown or assembly areas, staging areas, equipment storage areas, new access roads, and road/access closure required by the project or needed for construction; the location of borrow or spoil areas on or off TVA land; the extent of soil and vegetative disturbance; and information on any special reservoir operations needed for the project, such as drawdown or water discharge restrictions.

(v) *Site plans.* Some projects, particularly larger ones, may require a separate site plan which details existing and proposed changes to surface topography and elevations (cut and fill, clearing, *etc.*), location of all proposed facilities, and erosion control plans.

(vi) *Environmental consultations and permits.* To the fullest extent possible the applicant shall obtain or apply for other required environmental permits and approvals before or at the same time as applying for section 26a approvals. Consultations under the National Historic Preservation Act of 1966 and the Endangered Species Act of 1973 shall take place, and permits from the U.S. Army Corps of Engineers and State agencies for water or air regulation shall be obtained prior to or applications made at the same time as application for section 26a approval. The applicant shall provide TVA with copies of any such permits or approvals that are issued.

(c) *Discharges into navigable waters of the United States.* If construction, maintenance, or operation of the proposed structure or any part thereof, or the conduct of the activity in connection with which approval is sought, may result in any discharge into navigable waters of the United States, applicant shall also submit with the application, in addition to the material required by paragraph (b) of this section, a certification from the State in which such discharge would originate, or, if appropriate, from the interstate water pollution control agency having jurisdiction over the navigable waters at the point where the discharge would originate, or from the Environmental Protection Agency, that such State or interstate agency or the Environmental Protection Agency has determined that there is reasonable assurance that applicant's proposed activity will be conducted in a manner which will not violate applicable water quality standards. The applicant shall further submit such supplemental and additional information as TVA may deem necessary for the review of the application, including, without limitation, information concerning the amounts, chemical makeup, temperature differentials, type and quantity of suspended solids, and proposed treatment plans for any proposed discharges.

§ 1304.3 Delegation of authority.

The power to approve or disapprove applications under this part is delegated to the Vice President, Resource Stewardship, or the designee thereof, subject to appeal to the Board as provided in § 1304.6. In his/her discretion, the Vice President may submit any application to the Board for its approval or disapproval. Administration of the handling of applications is delegated to Resource Stewardship

§ 1304.4 Application review and approval process.

(a) TVA shall notify the U.S. Army Corps of Engineers (USACE) and other Federal agencies with jurisdiction of the application as appropriate.

(b) Any interested person may become a party of record at any time before the Vice President's decision is issued (or the decision of the Board on matters referred by the Vice President) by writing to TVA at one of the locations identified in § 1304.2.

(c) Hearings concerning approval of applications are conducted (in accordance with § 1304.5) when:

(1) TVA deems a hearing is necessary or appropriate in determining any issue presented by the application;

(2) A hearing is required under any applicable law or regulation;

(3) A hearing is requested by the USACE pursuant to the TVA/Corps joint processing Memorandum of Understanding; or

(4) An applicant or other party of record appeals the decision of the Vice President in accordance with the provisions of § 1304, and any party of record requests or the TVA Investigator directs that a hearing be held.

(d) Upon completion of the review of the application, including any hearing or hearings, the Vice President shall issue a decision approving or disapproving the application. The basis for the decision shall be set forth in the decision. In his discretion the Vice President may refer any application and supporting materials to the Board for its approval or disapproval.

(e) Promptly following the issuance of the decision, the Vice President or the Board, as the case may be, shall furnish a written copy thereof to the applicant and to any parties of record. The Vice President's decision shall become final unless an appeal is made pursuant to § 1304.6. Any decision by the Board on a matter referred by the Vice President shall be a final decision.

§ 1304.5 Conduct of hearings.

(a) If a hearing is to be held for any of the reasons described in § 1304.4(c), TVA shall give notice of the hearing to interested persons. Such notice may be given by publication in the **Federal Register**, publication in a daily newspaper of general circulation in the area of the proposed structure, personal written notice, posting on TVA's Internet website, or by any other method reasonably calculated to come to the attention of interested persons. The notice shall indicate the place, date, and time of hearing (to the extent feasible), the particular issues to which the hearing will pertain, and the manner of becoming a party of record, and shall provide other pertinent information as appropriate. The applicant shall automatically be a party of record.

(b) Hearings may be conducted by the Vice President and/or such other person or persons as may be designated by the Vice President or the Board for that purpose. Hearings are public and are conducted in an informal manner. Parties or record may be represented by counsel or other persons of their choosing. Technical rules of evidence are not observed although reasonable bounds are maintained as a relevancy, materiality, and competency. Evidence may be presented orally or by written statement and need not be under oath. Cross-examination of witnesses or others providing statements or testifying at a hearing shall not be allowed. After the hearing has been completed, additional evidence will not be received unless it presents new and material matter that in the judgment of the person or persons conducting the hearing could not be presented at the hearing. Where construction of the project also requires the approval of another agency of the Federal Government by or before whom a hearing is to be held, the Vice President may arrange with such agency to hold a joint hearing.

§ 1304.6 Appeals.

(a) Decisions approving or disapproving an application may be appealed as provided in this section. Decisions by the Vice President's designee shall be reviewed by the Vice President; decisions by the Vice President shall be reviewed by the Board.

(b) If a designee of the Vice President disapproves an application or approves it with terms and conditions deemed unacceptable by the applicant, the applicant may, by written request addressed to the Vice President, Resource Stewardship, Tennessee Valley Authority, P.O. Box 1589, 17 Ridgeway Road, Norris, TN 37828–1589, and mailed within thirty (30) days after receipt of the decision, obtain review of the decision by the Vice President. If the Vice President, either initially or as the result of an appeal, disapproves an application or approves it with terms and conditions deemed unacceptable by the applicant, the applicant may, by written request addressed to the Board of Directors, Tennessee Valley Authority, 400 W. Summit Hill Drive, Knoxville, TN 37902, and mailed within thirty (30) days after receipt of the decision, obtain review of the decision by the Board. In either event, the request must contain a signed representation that a copy of the written request for review was mailed to each party of record at the same time as it was mailed to TVA. A decision by the Vice President is a prerequisite for seeking Board review. There shall be no administrative appeal of a Board decision approving or disapproving an application.

(c) A party of record who is aggrieved or adversely affected by any decision approving an application may obtain review by the Board or by the Vice President, as appropriate, of such decision by written request prepared, addressed and mailed as provided in paragraph (b) of this section.

(d) Requests for review by the Vice President shall specify the reasons why it is contended that the determination of the Vice President's designee is in error.

(e) The applicant or other person requesting review and any party of record may submit additional written material in support of their positions to the Vice President within thirty (30) days after receipt by TVA of the request for review. Following receipt of a request for review, the Vice President will conduct such review as he or she deems appropriate. If additional information is required of the applicant or other person requesting the review, the Vice President shall allow for at least thirty (30) days in which to provide the additional information. At the conclusion of the review, the Vice President shall render his or her decision approving or disapproving the application.

(f) Requests for review by the Board shall specify the reasons why it is contended that the Vice President's determination is in error and indicate whether a hearing is requested.

(g) The applicant or other person requesting review and any party of record may submit additional written material in support of their positions to the Board within thirty (30) days after receipt by TVA of the request for review. Following receipt of a request for review, the Board will review the material on which the Vice President's decision was based and any additional

information submitted by any party of record, or a summary thereof, and may conduct or cause to be conducted such investigation of the application as the Board deems necessary or desirable. In the event the Board decides to conduct an investigation, it shall appoint an Investigating Officer. The Investigating Officer may be a TVA employee, including a TVA Resource Stewardship employee, or a person under contract to TVA, and shall not have been directly and substantially involved in the decision being appealed. The Investigating Officer shall be the hearing officer for any hearing held during the appeal process. At the conclusion of his or her investigation, the Investigating Officer shall summarize the results of the investigation in a written report to the Board. The report shall be provided to all parties of record and made part of the public record. Based on the review, investigation, and written submissions provided for in this paragraph, the Board shall render its decision approving or disapproving the application.

(h) A written copy of the decision in any review proceeding under this section, either by the Vice President or by the Board, shall be furnished to the applicant and to all parties of record promptly following determination of the matter.

§ 1304.7 Conditions of approvals.

Approvals of applications shall contain such conditions as are required by law and may contain such other general and special conditions as TVA deems necessary or desirable.

§ 1304.8 Denials.

TVA may, at its sole discretion, deny any application to construct, operate, conduct, or maintain any obstruction, structure, facility, or activity that in TVA's judgment would be contrary to the unified development and regulation of the Tennessee River system, would adversely affect navigation, flood control, public lands or reservations, the environment or sensitive resources (including, without limitation, federally listed threatened or endangered species, high priority State-listed species, wetlands with high function and value, archaeological or historical sites of national significance, and other sites or locations identified in TVA Reservoir Land Management Plans as requiring protection of the environment), or would be inconsistent with TVA's Shoreline Management Initiative. In lieu of denial, TVA may require mitigation measures where, in TVA's sole judgment, such measures would adequately protect against adverse effects.

§ 1304.9 Initiation of construction.

A permit issued pursuant to this part shall expire unless the applicant initiates construction within eighteen (18) months after the date of issuance.

§ 1304.10 Change in ownership of approved structures.

(a) When ownership of a permitted structure changes, the new owner shall notify TVA within sixty (60) days of the change of ownership. Upon application to TVA by the new owner, a permit for those existing structures or alterations shall be reissued to the new owner.

(b) The new owner and any subsequent owners may, upon application for and receipt of a permit, continue to use existing permitted structures.

(c) Subsequent owners are not required to modify existing structures constructed and maintained in accordance with the standards in effect at the time the permit was first issued provided they:

(1) Maintain such structures in good repair; and

(2) Obtain TVA approval for any repairs that would alter the size of the facility or for any new construction.

§ 1304.11 Little Tennessee River; date of formal submission

As regards structures on the Little Tennessee River, applications are deemed by TVA to be formally submitted within the meaning of section 26a of the Act, on that date upon which applicant has complied in good faith with all applicable provisions of § 1304.2.

Subpart B—Regulation of Nonnavigable Houseboats

§ 1304.100 Scope and intent.

This subpart prescribes regulations governing existing nonnavigable houseboats that are moored, anchored, or installed in the Tennessee River system or its tributaries. No new nonnavigable houseboats shall be moored, anchored, or installed in any portion of the Tennessee River system or its tributaries.

§ 1304.101 Nonnavigable houseboats

(a) Any houseboat failing to comply with the following criteria shall be deemed a non-navigable houseboat and may not be moored, anchored, installed, or operated on any part of the Tennessee River System or its tributaries except as provided in paragraph (b) of this section:

(1) Built on a boat hull or on two or more pontoons;

(2) Equipped with a motor and rudder controls located at a point on the houseboat from which there is forward visibility over a 180-degree range;

(3) Complaint with all applicable State and Federal requirements relating to vessels;

(4) Registered as a vessel in the State of principal use; and

(5) State registration numbers clearly displayed on the vessel.

(b) Nonnavigable houseboats approved by TVA prior to [the effective date of the final rule] shall be deemed existing houseboats and may remain on TVA reservoirs provided they remain in compliance with the rules contained in this part. Such houseboats shall be moored to mooring facilities contained within the designated and approved harbor limits of a commercial marina. Alternatively, provided the owner has obtained written approval from TVA pursuant to subpart A of this part authorizing mooring at such location, nonnavigable houseboats may be moored to the bank of the reservoir at locations where the owner of the houseboat is the owner or lessee (or the licensee of such owner or lessee) of the shoreline land, and at locations described by § 1304.201(a)(1), (2) and (3). All nonnavigable houseboats must be moored in such a manner as to:

(1) Avoid obstruction of or interference with navigation, flood control, public lands or reservations;

(2) Avoid adverse effects on public lands or reservations;

(3) Prevent the preemption of public waters when moored in permanent locations outside of the approved harbor limits of commercial marinas;

(4) Protect land and landrights owned by the United States alongside and subjacent to TVA reservoirs from trespass and other unlawful and unreasonable users; and

(5) Maintain, protect, and enhance the quality of the human environment.

(c) All approved nonnavigable houseboats must be equipped as follows with properly installed and operating Marine Sanitation Devise (MSD) or Sewage Holding Tanks and pumpout capability:

(1) Nonnavigable houseboats moored on ''Discharge Lakes'' must be equipped with a Type I or Type II MSD.

(2) Nonnavigable houseboats moored in: ''No Discharge Lakes'' must be equipped with holding tanks and pumpout capability. If a nonnavigable houseboat moored in a ''No Discharge Lake'' is equipped with a Type I or Type II MSD, it must be secured to prevent discharge into the lake.

(d) Approved nonnavigable houseboats shall be maintained in a

good state of repair. Such houseboats may be structurally repaired or rebuilt without additional approval from TVA, but any expansion in length, width, or height is prohibited except as approved in writing by TVA.

(e) All nonnavigable houseboats shall comply with the requirements for flotation devices contained in § 1304.401.

(f) Applications for mooring of a nonnavigable houseboat outside of designated harbor limits will be disapproved if TVA determines that the proposed mooring location would be contrary to the intent of this subpart.

§ 1304.12 Numbering of nonnavigable houseboats and transfer of ownership.

(a) All approved nonnavigable houseboats shall display a number assigned by TVA. The owner of the nonnavigable houseboat shall paint or attach a facsimile of the number on a readily visible part of the outside of the facility in letters at least 3 inches high.

(b) The transferee of any nonnavigable houseboat approved pursuant to the regulations in this subpart shall, within thirty (30) days of the transfer transaction, report the transfer to TVA.

(c) A nonnavigable houseboat moored at a location approved pursuant to the regulations in this subpart shall not be relocated and moored at a different location without prior approval by TVA, except for movement to new locations to or between mooring facilities within the designated harbor limits of a commercial dock or marina.

§ 1304.103 Approval of plans for structural modifications or rebuilding of approved nonnavigable houseboats.

Plans for the structural modification, or rebuilding of an approved nonnavigable houseboat shall be submitted to TVA for review and approval in advance of any structural modification which would increase the length, width, height, or flotation of the structure.

Subpart C—TVA Owned Residential Access Shoreland

§ 1304.200 Scope and intent.

Subpart C applies to residential water-use facilities, specifically the construction of docks, piers, boathouses (fixed and floating), retaining walls, and other structures and alterations, including channel excavation and vegetation management, on or along TVA-owned residential access shoreland. TVA manages the TVA-owned residential access shoreland to conserve, protect, and enhance shoreland resources, while providing reasonable access to the water of the lake by qualifying adjacent residents.

§ 1304.201 Applicability.

This subpart addresses residential-related (all private, noncommercial uses) shoreland construction activities along and across shoreland property owned by the United States and under the custody and control of TVA. Individual residential landowners wishing to construct shoreline facilities, clear vegetation and/or maintain an access corridor on adjacent TVA-owned lands are required to apply for and obtain a permit from TVA before conducting any such activities.

(a) This subpart applies to the following TVA-reservoir shoreline classifications:

(1) TVA-owned shorelands over which the adjacent residential landowner holds rights of ingress and egress to the water (except where TVA's deeded rights exclude a particular activity);

(2) TVA-owned shorelands designated in current TVA Reservoir Land Management Plans as open for consideration of residential shoreline development; and

(3) On reservoirs not having a current approved TVA Reservoir Land Management Plan at the time of application, TVA-owned shorelines designated in TVA's property forecast system as ''reservoir operations property,'' identified in a subdivision plan recorded prior to September 24, 1992, and containing at least one water-use facility developed prior to September 24, 1992.

(b) Construction of residential shoreline structures, access corridors, and vegetation management activities by owners of adjacent upland residential property shall not be allowed on any TVA-owned lands other than those described in one or more of the classifications identified in paragraph (a) of this section.

(c) Flowage easement shoreland. Except as otherwise specifically provided in subpart D of this part, subpart C does not apply to shorelines where TVA's property interest of ownership of a flowage easement. The terms of the particular flowage easement and subparts A, B, D and E of this part govern the use of such property.

§ 1304.202 General sediment and erosion control provisions.

(a) During shoreline construction activities TVA shall require that appropriate erosion and sediment control measures be utilized to prevent pollution of the waters of the reservoir.

(b) All material which accumulates behind sediment control structures must be removed from TVA land and placed at an upland site above the 100-year floodplain elevation or the Flood Risk Profile Elevation (whichever is applicable).

(c) Disturbed sites must be promptly stabilized with seeding, vegetative planting, erosion control netting, and/or mulch material.

§ 1304.203 Vegetation management.

No vegetation management shall be approved on TVA-owned Residential Access Shoreline until a Vegetation Management Plan meeting the vegetation management standards contained in this section is submitted to and approved by TVA.

(a) Except for the moving of lawns established and existing before [the effective date of the final rule], all vegetation management activities on TVA-owned property subject to this subpart (including all such activities described in paragraphs (b) through (m) of this section as ''allowed'' and all activities undertaken in connection with a section 26a permit obtained before [the effective date of the final rule]) require TVA's advance written permission. Special site circumstances such as the presence of wetlands may result in a requirement for mitigative measures or alternative vegetation management approaches.

(b) Vegetation may be cleared to create and maintain an access corridor up to but not exceeding 20 feet wide. The corridor will extend from the common boundary between TVA and the adjacent landowner to the water at normal summer pool.

(c) The access corridor will be located to minimize removal of trees of other vegetation on the TVA land.

(d) Grass may be planted and mowed within the access corridor, and stone, brick, concrete, mulch, or wooden paths, walkways and/or steps are allowed. Pruning of side limbs that extend into the access corridor from trees located outside the access corridor is allowed.

(e) A 50-foot-deep shoreline management zone (SMZ) shall be designated along the shoreline. The SMZ shall begin at the normal summer pool elevation and extend 50 feet horizontally inland on TVA property or a lesser distance coincidental with TVA ownership. Within the SMZ, no trees may be cut or vegetation removed, except that which is preapproved by TVA within the access corridor.

(f) Within the 50-foot SMZ and elsewhere on TVA land as defined in § 1304.201, clearing of specified understory plants (poison ivy, Japanese honeysuckle, kudzu, and other exotic

plants on a list provided by TVA) is allowed.

(g) On TVA land situated above the SMZ (more than 50 feet upland from normal summer pool), selective thinning of trees or other vegetation under 3 inches in diameter at the ground level is allowed.

(h) Removal of trees outside of the access corridor but within the SMZ may be approved to make the site suitable for approved shoreline erosion control projects.

(i) Vegetation removed for erosion control projects must be replaced with native species of vegetation.

(j) The forest floor must be left undisturbed, except as specified in this § 1304.203. Mowing is allowed only within the access border.

(k) Planting of trees, shrubs, wildflowers, and ground covers is allowed to improve or enhance the vegetative cover, provided native plants are used.

(l) Fertilizers and herbicides shall not be applied within the SMZ or elsewhere on TVA land, except as specifically approved in the Vegetative Management Plan.

(m) Restricted use herbicides and pesticides shall not be applied within the shoreline management zone except by a State certified applicator. All herbicides and pesticides shall be applied in accordance with label requirements.

§ 1304.204 Docks, piers, and boathouses.

Applicants are responsible for submitting plans for proposed docks, piers, and boathouses that conform to the standards that define the size of water-use facility that will be approved by TVA. Where and if site constraints at the proposed construction location preclude the building of a maximum approvable-sized structure, TVA shall determine the size of facility that may be approved. Applicants are required to submit accurate drawings with dimensions of all proposed facilities.

(a) Docks, piers, boathouses, and all other resident water-use facilities shall not exceed a total footprint area of greater than 1000 square feet.

(b) Docks, boatslips, piers, and fixed or floating boathouses are allowable. These and other water-use facilities associated with a lot must be sited within a 1000-square-foot rectangular or square area at the lakeward end of the access walk away that extends from the shore to the structure. Walkways from shoreline to the water-use structure are not included in calculating the 1000-foot area.

(c) Docks and walkway(s) shall not extend more than 150 feet from the shoreline, or more than one-third the distance to the opposite shoreline, whichever is less.

(d) All fixed piers and docks shall have deck elevations at least 18 inches above normal summer pool level (facilities on Chickamauga, Watts Bar, Fort Loudoun, and Tellico, shall be a minimum of 24 inches above normal summer pool).

(e) All docks, piers and other water-use facilities must be attached to the shore with a walkway which must connect from land to the structure by the most direct route and must adjoin the access corridor.

(f) Docks, piers, and boathouses may be fixed or floating or a combination of the two types.

(g) Roofs are allowed on boatslips, except on Kentucky Reservoir where roofs are not allowed on *fixed* structures due to extreme water level fluctuations. Roofs over docks or pier to provide shade are allowed on all reservoirs.

(h) Docks proposed in subdivisions recorded after [the effective date of the final rule] must be placed at least 50 feet from the neighbor's docks. When this density requirement cannot be met, TVA may require group or community facilities.

(i) Covered boatslips may be open or enclosed with siding.

(j) Access walkways constructed over water and internal walkways inside of boathouses shall not exceed 6 feet in width.

(k) Enclosed space shall be used solely for storage of water-use equipment. The outside deminsions of any completely enclosed storage space shall not exceed 32 square feet and must be located on an approved dock, pier, or boathouse, not on TVA land.

(l) Docks, piers, and boathouses shall not contain living space or sleeping areas. Floor space shall not be considered enclosed if three of the four walls are constructed of wire or screen mesh from floor to ceiling, and the wire or screen mesh leaves the interior of the structure open to the weather.

(m) Toilets or sinks creating discharges into the lake are not permitted.

(n) Covered docks, boatslips, and boathouses shall not exceed one story in height.

(o) Second stories on covered docks, piers, boatslips, or boathouses may be constructed as open decks with railing but shall not be enclosed with siding, screening, or covered by a roof.

§ 1304.205 Other water-use facilities.

(a) A marine railway or concrete boat launching ramp with associated driveway may be located within the access corridors. Construction must occur during reservoir drawdown. Excavated material must be placed at an upland site. Use of concrete is allowable; asphalt is not permitted.

(b) Tables or benches for cleaning fish are permitted on docks or piers.

(c) All anchoring cables or spud poles must be anchored to the walkway or to the ground in a way that will not accelerate shoreline erosion. Anchoring of cables, chains, or poles to trees on TVA property is not permitted.

(d) Electrical appliances, including stoves, refrigerators, freezers, and microwave ovens are not permitted on docks, piers, or boathouses.

(e) Mooring buoys/posts may be permitted in association with docks, piers, and boathouses provided the following requirements are met.

(1) Posts and buoys shall not extend farther into the lake than the associated waterfront structure.

(2) Posts must be 36 inches in height above the 100-year-flood elevation.

(3) Buoys must conform to the Uniform State Waterway Marking system.

(f) Where the applicant owns or controls less than 50 feet of property adjoining TVA shoreline, the overall width of the facilities permitted along the shore shall be limited to ensure sufficient space to accommodate other property owners.

(g) Structures shall not be wider than the width of the lot.

(h) In congested areas, TVA may establish special permit conditions requiring dry-docking of floating structures when a lake reaches a specific drawdown elevation to prevent these structures from interfering with navigation traffic, recreational boating access, or adjacent structures during winter drawdown.

§ 1304.206 Requirements for community dock, pier, boathouse, or other water-use facilities.

(a) Community facilities where individual facilities are not allowed:

(1) TVA may limit water-use facilities to community facilities where physical or environmental constraints on the shoreline preclude approval of individual docks priers or boathouses.

(2) When individual water-use facilities are not allowed, no more than one slip for each lot adjoining the TVA shoreland will be approved for any community facility.

(3) In narrow coves or other situations where shoreline frontage is limited, shoreline development may be limited to one landing dock for temporary moorage of boats not to exceed the 1000-square-foot footprint requirement, and/

or a boat launching ramp, if the site, in TVA's judgment, will accommodate such development.

(4) TVA will establish harbor limits for all community facilities exceeding 1000 square feet.

(b) Community facilities at jointly-owned community outlots:

(1) Plans for community facilities must be submitted by the developer of the subdivision or by a State-chartered homeowner's association representing all persons with a property interest in the community lot where the facilities are proposed.

(2) Size and number of slips at community water-use facilities lots shall be determined by TVA with consideration of the following:

(i) Size of community outlot;

(ii) Parking accommodations on the community outlot;

(iii) Length of shoreline frontage associated with the community outlot;

(iv) Number of property owners with access rights to the community outlot; and

(v) Other site specific conditions as determined by TVA.

(3) Vegetation management shall be in accordance with the requirements of § 1304.203 except that, at TVA's discretion, the community access corridor may exceed 20 feet in width, and thinning of vegetation outside of the corridor within or beyond the SMZ may be allowed to enhance views of the lake.

§ 1304.207 Channel excavation on TVA-owned residential access shoreland.

(a) Excavation of individual boat channels shall be approved only when TVA determines there is no other practicable alternative to achieving sufficient navigable water depth and the action would not substantially impact sensitive resources.

(b) No more than 150 cubic yards of material shall be removed for any individual boat channel.

(c) The length, width, and depth of approved boat channels shall not exceed the dimensions necessary to achieve 3-foot water depths for navigation of the vessel at the minimum winter drawdown elevation.

(d) Each side of the channel shall have a slope ratio of at least 3:1.

(e) Only one boat channel or harbor may be considered for each abutting property owner.

(f) The grade of the channel must allow drainage of water during lake drawdown periods.

(g) Channel excavations must be accomplished during the lake drawdown when the lake bottom is exposed and dry.

(h) Spoil material from channel excavations must be placed on accordance with any applicable local, State, and Federal regulations at an upland site above the TVA Flood Risk Profile elevation. For those reservoirs that have no flood control storage, dredge spoil must be disposed of and stabilized above the limits of the 100-year floodplain and off of TVA property.

§ 1304.208 Shoreline stabilization.

TVA may allow homeowners to stabilize eroding shorelines. TVA will determine if shoreline erosion is sufficient to approve the proposed stabilization treatment.

(a) *Biostabilization of eroded shorelines.*

(1) Moderate contouring of the bank may be allowed to provide conditions suitable for planting of vegetation.

(2) Tightly bound bundles of coconut fiber, logs, or other natural materials would be placed at the base of the eroded site to deflect waves.

(3) Willow stakes and bundles and live cuttings of suitable native plant materials may be planted along the surface of the eroded area.

(4) Native vegetation may be planted within the shoreline management zone to help minimize further erosion.

(5) Riprap may be allowed along the base of the eroded area to prevent further undercutting of the bank.

(b) *Use of gabions and riprap to stabilize eroded shorelines.*

(1) The riprap material must be quarry-run stone, natural stone, or other material approved by TVA.

(2) Rubber tires, concrete rubble, or other debris salvaged from construction sites shall not be used to stabilize shorelines.

(3) Gabions (rock wrapped with wire mesh) that are commercially manufactured for erosion control may be used.

(4) Riprap material must be placed so as to follow the existing contour of the bank.

(5) Site preparation must be limited to the work necessary to obtain adequate slope and stability of the riprap material.

(c) *Use of retaining walls for shoreline stabilization.*

(1) Retaining walls shall be allowed only where the erosion process is severe and TVA determines that a retaining wall is the most effective erosion control option or where the proposed wall would connect to an existing wall on the lot or to an adjacent owner's wall.

(2) The retaining wall must be constructed of stone, concrete blocks, poured concrete, gabions, or other materials acceptable to TVA. Railroad ties, rubber tires, broken concrete, brick, creosote timbers, and asphalt are not allowed.

(3) Reclamation of land that has been lost to erosion is not allowed.

(4) The base of the retaining wall shall not be located more than an average of two horizontal feet lakeward of the existing normal summer pool elevation. Riprap shall be placed at least two feet in depth along the footer of the retaining wall to deflect wave action and reduce undercutting that could eventually damage the retaining wall.

§ 1304.209 Fish attractor, spawning, and habitat structures.

Fish attractors constitute potential obstructions and require TVA approval.

(a) Fish attractors may be constructed of anchored brush piles, log cribs, and/or spawning benches, stake beds, vegetation, or rock piles, provided they meet *TVA Guidelines for fish Attractor Placement in TVA Reservoirs (TVA, 1997).*

(b) When established in connection with an approved dock, fish attractors shall not project more than 30 feet out from any portion of the dock.

(c) Any floatable materials must be permanently anchored.

§ 1304.210 Land-based structures/alternations.

(a) Except for steps, pathways, boat launching ramps, marine railways located in the access corridor, bank stabilization along the shoreline, and other uses described in this subpart, no permanent structures, fills or grading shall be allowed on TVA land.

(b) Portable items such as picnic tables and hammocks may be placed on TVA land; permanent land-based structures such as picnic pavilions, gazebos, satellite antennas, septic tanks, and drainfields shall not be allowed on TVA land.

(c) Utility lines (electric, water-intake lines, etc.) may be placed within the access corridor as follows:

(1) Power lines and poles must be installed:

(i) Above normal summer pool;

(ii) In a way that would not be hazardous to the public or interfere with TVA operations;

(iii) Solely to serve water-use facilities, and

(iv) In compliance with all State and local codes.

(2) Electrical service must be installed with an electrical disconnect that is:

(i) Located above the 500-year floodplain or the flood risk profile, whichever is higher, and

(ii) Is accessible during flood events.

(d) Fences crossing TVA residential access shoreland may be considered only where outstanding agricultural rights or fencing rights exist and the

land is used for agricultural purposes. Fences much have a built-in means for easy pedestrian passage by the public and they must be clearly marked.

§ 1304.211 Grandfathering of preexisting shoreline uses and structures.

In order to provide for a smooth transition to new standards, grandfathering provisions shall apply to preexisting development and shoreline uses established and permitted prior to November 1, 1999, which are located along or adjoin TVA-owned access residential shoreland or TVA flowage easement shoreline.

(a) Existing shoreline structures (docks, retaining walls, etc.) previously permitted by TVA are grandfathered.

(b) Grandfathered structures may continue to be maintained in accordance with previous permit requirements, and TVA does not require modification to conform to new standards.

(c) If a structure is destroyed by fire or storms, the permit shall be reissued if the replacement facility is rebuilt to specifications originally permitted by TVA.

(d) Vegetation management at grandfathered developments shall be as follows:

(1) Mowing of established preexisting lawns on TVA-owned residential access shoreland may be continued.

(2) At sites where established mowing is not specifically included as an authorized use in an existing permit, TVA will include mowing as a permitted use in the next permit action at that site.

(3) The SMZ is not required where established lawns existed prior to November 1, 1999.

(4) Any additional removal of trees or other vegetation (except for mowing of established, preexisting lawns) requires TVA's approval. Removal of trees greater than 3 inches diameter at ground level is not allowed.

§ 1304.212 Change in ownership of grandfathered structures or alterations.

(a) When ownership of a permitted structure or other shoreline alteration changes, the new owner shall comply with 1304.10 regarding notice to TVA.

(b) The new owner and any subsequent owners may, upon application for and receipt of a permit, continue to use existing permitted docks and other shoreline alterations.

(c) Subsequent owners are not required to modify existing prior to November 1, 1999.

(d) New owners wishing to continue existing grandfathered activities and structures must:

(1) Maintain existing permitted docks, piers, boathouses, and other shoreline structure in good repair.

(2) Obtain TVA approval for any repairs that would alter the size of the facility, for any new construction, or for removal of trees or other vegetation.

§ 1304.213 Waivers on TVA-owned residential access shoreland.

(a) Waivers or variances of standards contained in this subpart may be requested as provided in § 1304.409. Ordinarily, the following minimum criteria must be established before a request for waiver or variance of standards in this subpart C shall be considered:

(1) The property shall be within a preexisting development (an area where shoreline development existed prior to [the effective date of the final rule]); and

(2) The shoreline proposed alterations shall be compatible with surrounding permitted structures and uses within the subdivision or, if there is no subdivision, within the immediate vicinity (one-fourth mile radius).

(b) In approving waivers of or variances from the standards in subpart D of this part, TVA will consider, in addition to the factors listed in § 1304.409, the following:

(1) The prevailing permitted practices within the subdivision or immediate vicinity; and

(2) The uses permitted under the guidelines followed by TVA before [the effective date of the final rule].

§ 1304.214 Numbering of structures.

(a) All approved shoreline structures shall display a permit number assigned by TVA. The owner of the structure shall attach the number to the structure in a readily visible location on the lakeward facing side of the structure.

(b) Numbers shall be attached within ten (10) days of the completion of the structure.

(c) During construction, each structure will display a temporary poster with permit number supplied by TVA.

Subpart D—Activities on TVA Flowage Easement Shoreline

§ 1304.300 Scope and intent.

Any structure built upon land subject to a flowage easement held by TVA shall be deemed an obstruction affecting navigation, flood control, or public lands or reservations within the meaning of section 26a of the Act. Such obstructions shall be subject to all requirements of this part except those contained in subpart C, which shall apply as follows:

(a) All of §§ 1304.204, 1304.209, and 1304.212 shall apply,

(b) Sections 1304.200, 1304.203, 1304.206, 1304.207 (except to the extent it creates an obstruction), 1304.210, and 1304.213 shall not apply.

(c) Section 1304.201 shall not apply except for paragraph (c).

(d) Section 1304.202 shall apply except that TVA shall determine on a case-by-case basis whether it is necessary to remove materials accumulated behind sediment control structures to an upland site.

(e) Section 1304.205 shall apply except as follows:

(1) The facilities described in paragraph (a) are not limited to locations within an access corridor.

(2) The ''50 feet'' trigger of paragraph (f) shall not apply, but TVA may impose appropriate requirements to ensure accommodation of neighboring landowners.

(f) Section 1304.208 shall apply except that TVA approval shall not be required to conduct the activities described in paragraph (a).

(g) Section 1304.211 shall apply except for paragraph (d).

(h) Nothing contained in this part shall be construed to be in derogation of the rights of the United States or of TVA under any flowage easement held by the United States or TVA.

§ 1304.301 Septic tanks.

All septic tanks and septic tank systems to be installed on flowage easement land after [the effective date of the final rule] are subject to the application and permit requirements of this part without regard to whether the associated facility or facilities are regulated, and shall comply with § 1304.403(b) (1) and (2). TVA may exercise its rights under particular flowage easement documents to deny permission to install any septic tank or septic tank system that, in TVA's judgment, would pose a threat of pollution.

§ 1304.302 Utilities.

Upon application to and approval by TVA, utility lines (electric, water-intake lines, *etc.*) may be placed within the flowage easement area as follows:

(a) Power lines and poles shall be installed:

(1) Above normal summer pool;

(2) In a way that would not be hazardous to the public or interfere with TVA operations; and

(3) In compliance with all State and local codes.

(b) Electrical service shall be installed with an electrical disconnect that is located above the 500-year floodplain or

the flood risk profile, whichever is higher, and is accessible during flood events.

§ 1304.303 Vegetation management on flowage easement shoreline.

Removal, modification, or establishment of vegetation on privately owned shoreline subject to a TVA flowage easements does not require approval by TVA. When reviewing proposals for docks or other obstructions on flowage easement shoreland, TVA shall consider the potential for impacts to sensitive plants or other resources and may establish conditions in its approval of a proposal to avoid or minimize such impacts consistent with applicable laws and executive orders.

§ 1304.304 Channel excavation.

(a) Channel excavation of privately owned lake bottom subject to a TVA flowage easement does not require approval by TVA under section 26a if:

(1) All dredged material is placed above the limits of the 100-year floodplain or the TVA flood risk profile elevation, whichever is applicable, and

(2) The dredging is not being accomplished in conjunction with the construction of a shoreline or water-based structure requiring a section 26a permit.

(b) Any fill material placed within the flood control zone of a TVA reservoir requires TVA review and approval.

(c) TVA shall encourage owners of flowage easement property to adopt the standards for channel excavation applicable to TVA-owned residential access shoreland.

Subpart E—Miscellaneous

§ 1304.400 Definitions.

Except as the context may otherwise require, the following words or terms, when used in this part 1304, have the meaning specified in this section.

100-year floodplain means that area inundated by the one percent annual chance (or 100-year) flood.

500-year floodplain means an area inundated by the 0.2 percent annual chance (or 500-year) flood; any land susceptible to inundation during the 500-year or greater flood.

Act means the Tennessee Valley Authority Act of 1933, as amended. Section 26a of the Act is reprinted in Appendix A to this part as a convenience to the reader.

Applicant means the person, corporation, State, municipality, political subdivision or other entity making application to TVA.

Application means a written request for the approval of plans pursuant to the regulations contained in this part.

Backlot means a residential lot not located adjacent to the shoreline but located in a subdivision associated with the shoreline.

Board means the Board of Directors of TVA.

Community outlot means a subdivision lot located adjacent to the shoreline and designated by deed or subdivision convenant as available for use by all property owners within the subdivision.

Dredging means the removal of material from a submerged location, primarily for deepening harbors and waterways.

Enclosed structure means a structure enclosed overhead and on all sides so as to keep out the weather.

Flood control storage means the volume within an elevation range on a TVA reservoir that is reserved for the storage of floodwater.

Flood control storage zone means the area within an elevation range on a TVA reservoir that is reserved for the storage of floodwater. TVA shall, upon request, identify the contour marking the upper limit of the flood control storage zone at particular reservoir locations.

Flood risk profile elevation means the elevation of the 500-year flood that has been adjusted for surcharge at the dam. Surcharge is the ability to raise the water level behind the dam above the top-of-gates elevation.

Flowage easement shoreland means privately owned properties where TVA has the right to flood the land.

Footprint means the total water surface area of either a square or rectangular shape occupied by an adjoining property's owner's dock, pier, boathouse, or boatwells.

Maximum shoreline contour means an elevation typically five feet above the top of the gates of a TVA dam. It is sometimes the property boundary between TVA property and adjoining private property.

Nonnavigable houseboat means any houseboat not in compliance with one or more of the criteria defining a navigable houseboat.

Normal summer pool means the level to which the reservoirs may be filled by June 1. Where storage space is available above this level, additional filing may be made as needed for flood control.

Owner or landowner means all of the owners of a parcel of land. In all cases where TVA approval is required to engage in an activity and the applicant's eligibility to seek approval depends on status as an owner of real property, the owner or owners of only a fractional interest or of fractional interests totaling less than one in any such property shall under no circumstances be considered, by virtue of such fractional interests or interest only, to be an owner and as such eligible to seek approval to conduct the activity without the consent of the other co-owners.

Shoreland means same as shoreline area.

Shoreline means the line where the water of a TVA reservoir meets the shore when the water level is at the normal summer pool elevation.

Shoreline means the line where the water of a TVA reservoir meets the shore when the water level is at the normal summer pool elevation.

Shoreline area means the surface of land lying between minimum winter pool elevation of a TVA reservoir and the maximum shoreline contour.

Shoreline Management Zone (SMZ) means an area on TVA-owned land beginning at the normal summer pool elevations and extending 50 feet inland.

Shoreline structure means Any land-based structure constructed above the full summer pool elevation of a TVA lake but below the maximum shoreline contours of that lake.

TVA means the Tennessee Valley Authority.

TVA property means real property owned by the United States and under the custody and control of TVA.

Vice President means the Vice President, Resource Stewardship, TVA, or a functionally equivalent position.

Water-based structure means any structure, fixed or floating, constructed on or in navigable waters of the United States.

Winter drawdown elevation means the elevation to which a reservoir water level is lowered during fall to provide storage capacity for winter and spring floodwaters.

Winter pool means the lowest level expected for the reservoir during the flood season.

§ 1304.401 Flotation devices and material, all floating structures.

(a) Flotation for all docks, boat mooring buoys, and other water-use structures and facilities, shall be of materials commercially manufactured for marine use. Flotation materials shall not become waterlogged, crack, peel, fragment, or be subject to loss of beads. Flotation materials shall be resistant to puncture, penetration, damage by animals, and fire. Any flotation within 40 feet of a line carrying fuel shall be 100 percent impervious to water and fuel. Styrofoam flotation must be encased. Reuse of plastic, metal, or other previously used drums or

containers for encasement or flotation purpose is prohibited, except as provided in paragraph (c) of this section for certain metal drums already in use. Existing flotation (secured in place prior to [the effective date of the final rule]) in compliance with previous rules (contained in the 18 CFR, part 400 to End, edition revised as of April 1, 2000) is authorized until in TVA's judgment the flotation is no longer serviceable, at which time it shall be replaced with approved flotation upon notification from TVA. For any float installed after [the effective date of the final rule], repair or replacement is required when it no longer performs its designated function or exhibits any of the conditions prohibited by this subpart.

(b) Because of the possible release of toxic or polluting substances, and the hazard to navigation from metal drums that become partially filled with water and escape from docks, boathouses, houseboats, floats, and other water-use structures and facilities for which they are used for flotation, the use of metal drums in any form, except as authorized in paragraph (c) of this section, for flotation of any facilities is prohibited.

(c) Only metal drums which have been filled with plastic foam or other solid flotation materials and welded, strapped, or otherwise firmly secured in place prior to July 1, 1972, on existing facilities are permitted. Replacement of any metal drum flotation permitted to be used by this paragraph must be with a commercially manufactured flotation device or material, for example, pontoons, boat hulls, or other buoyancy devices made of steel, aluminum, fiberglass, or plastic foam, as provided for in paragraph (a) of this section.

(d) Every flotation device employed in the Tennessee River system must be firmly and securely affixed to the structure it supports with materials capable of withstanding prolonged exposure to wave wash and weather conditions.

§ 1304.402 Marine sanitation devices.

No person operating a commercial boat dock permitted under this part shall allow the mooring at such permitted facility of any watercraft or floating structure equipped with a marine sanitation device (MSD) unless such MSD is in compliance with all applicable statutes and regulations governing ''no discharge'' zones. All slip rental arrangements entered into after [the effective date of the final rule] by operators of such commercial boat docks shall contain a written provision implementing this requirements. Upon request of TVA, commercial dock operators shall provide evidence satisfactory to TVA of their compliance with this section.

§ 1304.403 Wastewater outfalls; septic tanks.

(a) *Wastewater outfall.* Applicants for a wastewater outfall shall provide copies of all Federal, State, and local permits, licenses, and approvals required for the facility prior to applying for TVA approval, or shall concurrently with the TVA application apply for such approvals. A section 26a permit shall not be issued until other required water quality approvals are obtained, and TVA reserves the right to impose additional requirements.

(b) *Septic systems.* Septic tank and sewage disposal systems associated with facilities regulated under this part must meet the following requirements:

(1) Site approval by the local health department, including suitable soil conditions, percolation rates, slope, and area.

(2) A 2-foot vertical separation disposal field and the normal summer pool.

(3) When annual flood-frequency elevations are available for the mainstream reservoirs, they will be used instead of the normal summer pool elevation. Tributary reservoirs will use the normal maximum pool.

(4) Septic tank systems shall not be located on TVA-owned property within the shoreline area.

§ 1304.404 Marina sewage pump-out stations and holding tanks.

All pump-out facilities constructed after [the effective date of the final rule] shall meet the following minimum design and operating requirements:

(a) Spill-proof connection with shipboard holding tanks;

(b) Suction controls or vacuum breaker capable of limiting suction to such levels as will avoid collapse of rigid holding tanks;

(c) Available fresh water facilities for tank flushing;

(d) Check valve and positive cut-off or other device to preclude spillage when breaking connection with vessel being served;

(c) Adequate interim storage where storage is necessary before transfer to approved treatment facilities;

(f) No overflow outlet capable of discharging effluent into the reservoir;

(g) Alarm system adequate to notify the operator when the holding tank is full;

(h) Convenient access to holding tanks and piping system for purposes of inspection;

(i) Spill-proof features adequate for transfer of sewage from all movable floating pump-out facilities to shore-based treatment plants or intermediate transfer facilities; and

(j) A reliable disposal method consisting of:

(1) An approved upland septic system that meets TVA, State, and local requirements; or

(2) Proof of a contract with a sewage disposal contractor;

(k) A written statement to TVA certifying that the system shall be operated and maintained in such a way as to prevent any discharge or seepage of wastewater or sewage into the lake.

§ 1304.405 Commercial marina harbor limits.

The landward limits of commercial marina harbor areas are determined by the extent of land rights held by the dock operator. The lakeward limits of harbors at commercial marinas will be designated by TVA on the basis of the size and extent of facilities at the dock, navigation and flood control requirements, optimum use of lands and land rights owned by the United States, and on the basis of the environmental effects associated with the use of the harbor. Mooring buoys or slips and permanent anchorage are prohibited beyond the lakeward extent of harbor limits.

§ 1304.406 Fuel storage tanks and handling facilities

Fuel storage tanks and handling facilities are generally either underground (UST) or aboveground (AST) storage tank systems. An UST is any one or combination of tanks or tank systems defined in applicable Federal or State regulations as an UST. Typically (unless otherwise provided by applicable Federal or State rules), an UST is used to contain a regulated substance (such as a petroleum product) and has 10 percent or more of its total volume beneath the surface of the ground. The total volume includes any piping used in the system. An UST may be a buried tank, or an aboveground tank with buried piping if the piping holds 10 percent or more of the total system volume including the tank. For purposes of this part, an aboveground storage tank (AST) is any storage tank whose total volume (piping and tank) is less than 10 percent underground or any storage tank defined by applicable law or regulation as an AST.

(a) TVA requires the following to be included in all applications submitted after [the effective date of the final rule] to install an UST or any part of an UST system below the 500-year flood elevation on a TVA reservoir, or regulated tailwater:

(1) A copy of the State approval for the UST along with a copy of the application sent to the State and any plans or drawings that were submitted for the State's review;

(2) Evidence of secondary containment for all piping or other systems associated with the UST;

(3) Evidence of Secondary containment to contain leaks from gas pump(s);

(4) Calculations certified by a licensed, professional engineer in the relevant State showing how the tank will be anchored so that it does not float during flooding; and

(5) Evidence, where applicable, that the applicant has complied with all spill prevention, control and countermeasures (SPCC) requirements.

(b) The applicant must accept and sign a document stating that the applicant shall at all times be the owner of the UST system, that TVA shall have the right (but no duty) to prevent or remedy pollution or violations of law, including removal of the UST system, with costs charged to the applicant, that the applicant shall at all times maintain and operate the UST system in full compliance with applicable Federal, State, and local UST regulations, and that the applicant shall maintain eligibility in any applicable State trust fund.

(c) An application to install an AST or any part of an AST system below the 500-year elevation on a TVA reservoir or a regulated tailwater is subject to all of the requirements of § 1304.406 (a) and (b) except that paragraph (a)(1) shall not apply in States that do not require application or approval for installation of an AST. Eligibility must be maintained for any applicable AST trust fund, and the system must be maintained and operated in accordance with any applicable AST regulations. The applicant must notify and obtain any required documents or permission from the State fire marshal's office prior to installation of the AST. The applicant must also follow the National Fire Protection Association Codes 30 and 30A for installation and maintenance of flammable and combustible liquids storage tanks at marine service stations.

(d) *Fuel handling on private, non-commercial docks and piers.* TVA will not approve the installation, operation, or maintenance of fuel handling facilities on any private, non-commercial dock or pier.

(e) *Demonstration of financial responsibility.* Applicants for a fuel handling facility to be located in whole or in part on TVA land shall be required to provide TVA, in a form and amount acceptable to TVA, a surety bond, irrevocable letter of credit, pollution liability insurance, or other evidence of financial responsibility in the event of a release.

§ 1304.407 Removal of unauthorized, unsafe, and derelict structures.

If, at any time, any dock, wharf, boathouse (fixed or floating), nonnavigable houseboat, outfall, aerial cable, or other fixed or floating structure or facility (including any navigable boat or vessel that has become deteriorated and is a potential navigation hazard or impediment to flood control) is anchored, installed, constructed, or moored in a manner inconsistent with this part, or is not constructed in accordance with plans approved by TVA, or is not maintained or operated so as to remain in accordance with such plans, or is not kept in a good state of repair and in good, safe, and substantial condition, and the owner or operator thereof fails to repair or remove such structure (or operate or maintain it in accordance with such plans) within ninety (90) days after written notice from TVA to do so, TVA may cancel any license, permit, or approval and remove such structure, and/or cause it to be removed, from the Tennessee River system and/or lands in the custody or control of TVA. Such written notice may be given by mailing a copy thereof to the owner's address as listed on the license, permit, or approval or by posting a copy on the structure or facility. TVA will remove or cause to be removed any such structure or facility anchored, installed, constructed, or moored without such license, permit, or approval, whether such license or approval has once been obtained and subsequently canceled, or whether it has never been obtained. TVA's removal costs shall be charged to the owner of the structure, and payment of such costs shall be a condition of approval for any future facility proposed to serve the tract of land at issue or any tract derived therefrom whether or not the current owner caused such charges to be incurred. In addition, any applicant with an outstanding removal charge payable to TVA shall, until such time as the charge be paid in full, be ineligible to receive a permit or approval from TVA for any facility located anywhere along or in the Tennessee River or its tributaries. TVA shall not be responsible for the loss of property associated with the removal of any such structure or facility including, without limitation, the loss of any navigable boat or vessel moored at such a facility. Any costs voluntarily incurred by TVA to protect and store such property shall be removal costs within the meaning of this section, and TVA may sell such property and apply the proceeds toward any and all of its removal costs. Small businesses seeking expedited consideration of the economic impact of actions under this section may contact TVA's Supplier and Diverse Business Relations staff, TVA Procurement, 1101 Market Street, Chattanooga, Tennessee 37402–2801.

§ 1304.408 Development within flood control storage zones of TVA reservoirs.

(a) Activities involving development within the flood control storage zone on TVA reservoirs will be reviewed to determine if the proposed activity qualifies as a repetitive action. Under TVA's implementation of Execution Order 11988, Floodplain Management, repetitive actions are projects within a class of Actions TVA has determined to be approvable without further review and documentation related to flood control storage, provided the loss of flood control storage caused by the project does not exceed one acre-foot. A partial list of repetitive actions includes:

(1) Private and public water use facilities;

(2) Commercial recreation boat dock and water use facilities;

(3) Water intake structures;

(4) Outfalls;

(5) Mooring and loading facilities for barge terminals;

(6) Minor grading and fills; and

(7) Bridges and culverts for pedestrian, highway, and railroad crossings.

(b) Projects resulting in flood storage loss in excess of one acre-foot will not be considered repetitive actions.

(c) For projects not qualifying as repetitive actions, the applicant would be required, as appropriate, to evaluate alternatives to the placement of fill or the construction of a project within the flood control storage zone that would result in lost flood control storage. The alternative evaluation would either identify a better option or support and document that there is no reasonable alternative to the loss of flood control storage. If this determination can be made, the applicant must then demonstrate how the loss of flood control storage will be minimized.

(1) In addition, documentation should be provided regarding:

(i) The amount of anticipated flood control storage loss;

(ii) The cost of compensation of the displaced flood control storage (how much it would cost to excavate material from the flood control storage zone, haul it to an upland site and dispose of it);

(iii) The cost of mitigation of the displaced flood control storage (how

much it would cost to excavate material from another site within the flood control storage zone, haul it to the project site and use as the fill material);

(iv) The cost of the project; and

(v) The nature and significance of any economic and/or natural resource benefits that would be realized as a result of the project.

(2) TVA may, in its discretion, decline to permit any project that would result in the loss of flood control storage.

(d) Recreational vehicles parked or placed within flood control storage zones of TVA reservoirs shall be deemed an obstruction affecting navigation, flood control, or public lands or reservations within the meaning of section 26a of the Act unless they:

(1) Remain truly mobile and ready for highway use. The unit must be on its wheels or a jacking system and be attached to its site by only quick disconnect type utilities;

(2) Have no permanently attached additions, connections, foundations, porches, or similar structures; and

(3) Have an electrical cutoff switch that is located above the flood control zone and fully accessible during flood events.

§ 1304.409 Variances.

The Vice President or the designee thereof is authorized, following consideration whether a proposed structure or other regulated activity would adversely impact navigation, flood control, public lands or reservations, power generation, the environment, or sensitive environmental resources, or would be incompatible with surrounding uses or inconsistent with an approved TVA reservoir land management plan, to approve a structure or activity the varies from the requirements of this part in minor aspects.

§ 1304.410 Indefinite or temporary moorage of recreational vessels.

(a) Recreational vessels' moorage at unpermitted locations along the shoreline of any TVA lake may not exceed 14 consecutive days at any one place or at any place within one mile thereof.

(b) Recreational vessels may not establish temporary moorage within the limits of primary or secondary navigation channels.

(c) Moorage lines of recreational vessels may not be placed in such a way as to block or hinder boating access to any part of the lake.

§ 1304.411 Navigation restrictions.

(a) Except for the placement of riprap along the shoreline, structures, land based or water-use, shall not be located within the limits of safety harbors and landings establish for commercial navigation.

(b) Structures shall not be located in such a way as to block the visibility of navigation aids located on the shoreland or in the reservoir adjacent to the shoreline. Examples of navigation aids are lights, dayboards, and directional signs.

(c) Docks, piers, and boathouses located in coves, embayments, or creeks shall not extend more than one third the distance to the opposite shoreline at normal summer pool elevation.

(d) The establishment of ''no-wake'' zones outside approved harbor limits is prohibited at marinas or community dock facilities that are adjacent to or near a commercial navigation channel. In such circumstances, facility owners may, upon approval from TVA, install a floating breakwater along the harbor limit to reduce wave and wash action.

Appendix A To Part 1304—Section 26a of Tennessee Valley Authority Act of 1933, as Amended (49 Stat. 1079, 16 U.S.C. 831y–1)

Section 26a. The unified development and regulation of the Tennessee River system requires that no dam, appurtenant works, or other obstruction affecting navigation, flood control, or public lands or reservations shall be constructed, and thereafter operated or maintained across, along, or in the said river or any of its tributaries until plans for such construction, operation, and maintenance shall have been submitted to and approved by the Board; and the construction, commencement of construction, operation, or maintenance of such structures without such approval is hereby prohibited. When such plans shall have been approved, deviation therefrom either before or after completion of such structures is prohibited unless the modification of such plans has previously been submitted to and approved by the Board.

In the event the Board shall, within sixty (60) days after their formal submission to the Board, fail to approve any plans or modifications, as the case may be, for construction, operation, or maintenance of any such structures on the Little Tennessee River, the above requirements shall be deemed satisfied, if upon application to the Secretary of War, with due notice to the Corporation, and hearing thereon, such plans or modifications are approved by the said Secretary of War as reasonable adequate and effective for the unified development and regulation of the Tennessee River system.

Such construction, commencement of construction, operation, or maintenance of any structures or parts thereof in violation of the provisions of this section may be prevented, and the removal or discontinuation thereof required by the injunction or order of any district court exercising jurisdiction in any district in which such structures or parts thereof may be situated, and the Corporation is hereby authorized to bring appropriate proceedings to this end.

The requirements of this section shall not be constructed to be a substitute for the requirements of any other law of the United States or of any State, now in effect or hereafter enacted, but shall be in addition thereto, so that any approval, license, permit, or other sanction now or hereafter required by the provisions of any such law for the construction, operation, or maintenance of any structures whatever, except such as may be constructed, operated, or maintained by the Corporation, shall be required, notwithstanding the provisions of this section.

[**Note:** The official text of section 26a of the Tennessee Valley Authority Act of 1933, as amended, is published at 16 U.S.C. 831y–1.]

Dated: September 5, 2000.

Kathryn J. Jackson,

Executive Vice President, River Systems Operations and Environment, Tennessee Valley Authority.

[FR Doc. 00–23424 Filed 9–19–00; 8:45 am]

BILLING CODE 8120–08–M

DEPARTMENT OF HEALTH AND HUMAN SERVICES

Food and Drug Administration

21 CFR Part 101

[Docket No. 00N–1351]

Food Labeling; Use of the Term ''Fresh'' for Foods Processed With Alternative Nonthermal Technologies

AGENCY: Food and Drug Administration, HHS.

ACTION: Reopening of the comment period.

SUMMARY: The Food and Drug Administration (FDA) is reopening to November 20, 2000, the comment period for a document published in the **Federal Register** of July 3, 2000 (65 FR 41029), that announced a public meeting to discuss use of the term ''fresh'' for foods processed with alternative technologies. FDA is taking this action in response to a request for more time to submit comments to FDA.

DATES: Submit written comments by November 20, 2000.

ADDRESSES: Submit written comments to the Dockets Management Branch (HFA–305), Food and Drug Administration, rm. 1061, 5630 Fishers Lane, Rockville, MD 20852. You may also send comments to the Dockets Management Branch at the following e-mail address: FDADockets@oc.fda.gov or via the FDA Internet at http://www.accessdata.fda.gov/scripts/oc/dockets/comments/commentdocket.cfm.

FOR FURTHER INFORMATION CONTACT: Geraldine A. June, Center for Food Safety and Applied Nutrition (HFS–822), Food and Drug Administration, 200 C St. SW., Washington, DC 20204, 202–205–4168 or FAX 202–205–5295.

SUPPLEMENTARY INFORMATION:

I. Reopening of Comment Period

In the **Federal Register** of July 3, 2000 (65 FR 41029), FDA (we) published a document announcing a public meeting to discuss the use of the term ''fresh'' on foods processed with alternative nonthermal technologies. In that document, we solicited public input on whether use of the term ''fresh'' is truthful and nonmisleading in the labeling of foods processed with these technologies and on what criteria we should use when considering use of the term with future technologies. We stated that we would make available at our Dockets Management Branch and on our website the transcript of the public meeting. Also in that document, we stated that interested parties may submit comments to the docket until August 21, 2000.

Following the public meeting, FDA received a comment from a trade association requesting more time for interested parties to comment. The trade association stated that the testimony presented at the public meeting made it evident that the issues surrounding the use of the term ''fresh'' on foods processed with new technologies are quite complicated. The trade association maintained that additional time is needed for careful consideration of the scientific and technical topics on which FDA is seeking comments. FDA believes that reopening the comment period until Novembr 20, 2000, is appropriate. Reopening the comment period will allow the public adequate time to read the transcript of the public meeting and to carefully consider the topics we are seeking input on before preparing their comments.

II. How To Submit Comments

Interested persons may, on or before November 20, 2000, submit written comments to the Dockets Management Branch (address above). You may also send comments to the Dockets Management Branch at the following e-mail address: FDADockets@oc.fda.gov or via the FDA Internet at http://www.accessdata.fda.gov/scripts/oc/dockets/comments/commentdocket.cfm. Please address your comments to the docket number given at the beginning of this document. You must submit two copies of comments, identified with the docket number found in brackets in the heading of this document, except that you may submit one copy if you are an individual. You may review received comments in the Dockets Management Branch between 9 a.m. and 4 p.m. Monday through Friday.

Dated: September 12, 2000

William K. Hubbard,

Senior Associate Commissioner for Policy, Planning, and Legislation.

[FR Doc. 00–24123 Filed 9–19–00; 8:45 am]

BILLING CODE 4160–01–F

DEPARTMENT OF THE TREASURY

Internal Revenue Service

26 CFR Part 1

[REG–112502–00]

RIN 1545–AY45

Guidance Under Subpart F Relating to Partnerships

AGENCY: Internal Revenue Service (IRS), Treasury.

ACTION: Notice of proposed rulemaking and notice of public hearing.

SUMMARY: A notice of proposed rulemaking and notice of proposed rulemaking by cross-reference to temporary regulations published in the **Federal Register** on March 26, 1998, providing guidance under subpart F relating to partnerships and branches, were withdrawn by a notice of proposed rulemaking published in the **Federal Register** on July 13, 1999. This document proposes, with minor changes, the former proposed regulations relating to the treatment of a controlled foreign corporation's distributive share of partnership income. These regulations are necessary to provide guidance on the treatment under subpart F of income earned by a controlled foreign corporation through a partnership. This document also provides notice of a public hearing on these proposed regulations.

DATES: Written comments and outlines of oral comments to be discussed at the public hearing scheduled for December 5, 2000, must be received by November 14, 2000.

ADDRESSES: Send submissions to: CC:M&SP:RU (REG–112502–00), room 5226, Internal Revenue Service, POB 7604, Ben Franklin Station, Washington DC 20044. Submissions may be hand delivered Monday through Friday between the hours of 8 a.m. and 5 p.m. to: CC:M&SP:RU (REG–112502–00), Courier's Desk, Internal Revenue Service, 1111 Constitution Avenue, NW., Washington DC. Alternatively, taxpayers may submit comments electronically via the Internet by selecting the ''Tax Regs'' option on the IRS Home Page, or by submitting comments directly to the IRS Internet site at http://www.irs.ustreas.gov/tax_regs/comments.html. The public hearing will be held in room 4718, Internal Revenue Building, 1111 Constitution Avenue NW., Washington, DC 20224.

FOR FURTHER INFORMATION CONTACT: Concerning the regulations, Valerie Mark, (202) 622–3840; concerning submissions of comments, the hearing, and/or to be placed on the building access list to attend the hearing, Treena Garrett, (202) 622–7180 (not toll-free numbers).

SUPPLEMENTARY INFORMATION:

Background

On March 26, 1998 (63 FR 14613), the IRS issued proposed regulations (REG–104537–97) which contained two sets of provisions, one relating to the treatment under subpart F of a controlled foreign corporation's (CFC's) distributive share of partnership income (including a clarification of the manufacturing exception under the foreign base company sales income rules) and the other relating to hybrid branch transactions. The provisions relating to hybrid branch transactions were also issued as temporary regulations (TD 8767). Congress and taxpayers raised concerns about the proposed and temporary regulations relating to hybrid branch transactions. To respond to these concerns, on July 6, 1998, Treasury and the IRS issued Notice 98–35 (1998–27 I.R.B. 35), which announced that they would withdraw the proposed regulations and remove the temporary regulations. Notice 98–35 also announced that Treasury and the IRS would issue two new separate sets of proposed regulations. One proposed regulation would contain hybrid branch rules. The other proposed regulation would contain rules pertaining to the treatment under subpart F of a CFC's distributive share of partnership income. On July 13, 1999, in furtherance of Notice 98–35, Treasury and the IRS published REG–113909–98 (64 FR 37727), which withdrew the proposed regulations and issued new proposed regulations containing the hybrid branch provisions with new dates of applicability to give Congress and the Treasury more time to evaluate the issues raised by these provisions. On the same date, TD 8827 (64 FR 37677) removed the temporary regulations relating to hybrid branch transactions. Treasury and the IRS are now proposing

the regulations relating to the subpart F treatment of a CFC's distributive share of partnership income.

This document substantially restates the former proposed regulations relating to the treatment of a CFC's distributive share of partnership income under subpart F. These new proposed regulations, however, do not contain the provisions of the former proposed regulations that clarified the manufacturing exception under subpart F. Regulations clarifying the manufacturing exception will be proposed at a later date.

Explanation of Provisions

These proposed regulations clarify the appropriate treatment under subpart F of certain partnership items that had been the subject of *Brown Group, Inc.* v. *Commissioner,* 77 F.3d 217 (8th Cir. 1996), vacating and remanding 104 T.C. 105 (1995). In *Brown Group,* a Cayman Islands partnership with a Cayman Islands CFC partner earned commission income from purchasing footwear in Brazil on behalf of the CFC's U.S. parent. This commission income would have been subpart F income, specifically foreign base company sales income under section 954(d), to the CFC if it had earned this commission income directly and under the same circumstances in which the partnership earned this income. The Tax Court applied an aggregate theory of partnerships and held that the CFC's distributive share of this commission income was foreign base company sales income. The Eighth Circuit, vacating and remanding the Tax Court's decision, applied an entity theory of partnerships and held that the CFC's distributive share of this commission income was not foreign base company sales income.

In response to the Eighth Circuit's opinion, the IRS announced that it intended to issue regulations under subpart F to clarify its position that whether a CFC partner's distributive share of partnership income is subpart F income generally is determined at the CFC partner level. See Notice 96–39 (1996–2 C.B. 209).

The proposed regulations would provide guidance for the treatment under subpart F of a CFC partner's distributive share of subpart F income. The regulations would provide general rules to determine whether a CFC partner's distributive share of partnership income falls within, not only foreign base company sales income, the category of income at issue in *Brown Group,* but any category of subpart F income. These regulations also would provide guidance about the treatment of a CFC partner's distributive share of foreign personal holding company income, foreign base company sales income, foreign base company services income, and earnings invested in United States property under certain specific provisions of subpart F.

The proposed regulations are based on the authority of subchapter K and subpart F and the policies underlying those provisions. The legislative history of subchapter K provides that a partnership distributive share should be characterized by using the approach that best serves the Internal Revenue Code or regulations section at issue.

To allow a CFC to avoid subpart F treatment for items of income through the simple expedient of receiving them as distributive shares of partnership income, rather than directly, is contrary to the intent of subpart F. Subpart F was intended to limit deferral of U.S. income tax on passive income received by CFCs, as well as on certain other kinds of easily transferable income.

Under these proposed regulations, gross income would be characterized at the partnership level, as, for example, sales income. If any part of the partnership's gross income would be subpart F income if received directly by partners that are CFCs, it must be separately taken into account by each partner, under section 702. Thus, to the extent the separately stated income is subpart F income at the CFC partner level, it will be taken into account in determining the CFC's total subpart F income for the taxable year and U.S. shareholders of the CFC will currently include their pro rata share of this income in gross income to the extent provided under the rules of subpart F.

The regulations under section 702 would be clarified to expressly provide that an item must be separately taken into account when, if separately taken into account by any partner, the item would result in an income tax liability for that partner, or any other person, different from that which would result if the partner did not take the item into account separately. This clarification incorporates into the regulations Rev. Rul. 86–138 (1986–2 C.B. 84), which holds that a subsidiary partnership in a multi-tiered arrangement must separately state items which, if separately taken into account by any partner of any partnership in the multi-tiered arrangement, would affect the income tax liability of that partner.

The regulations under section 952 also would be clarified to expressly include within the definition of subpart F income a CFC's distributive share of any item of gross income of a partnership to the extent the income would have been subpart F income if received by the CFC partner directly. Comments are requested as to whether this rule should apply for ownership interests that fall below certain thresholds.

The proposed regulations would provide further that, generally, in determining whether a distributive share of partnership income is subpart F income, whether an entity is a related person and whether an activity takes place in or outside the CFC's country of incorporation is determined with respect to the CFC partner and not the partnership. Applying these rules to the *Brown Group* facts, the income would be characterized at the partnership level as commission income from the purchase of shoes in Brazil on behalf of the U.S. parent for sale in the U.S. Each partner would be required to separately take into account its distributive share of this commission income. It would then be determined at the CFC partner level that the shoes were manufactured and sold for use outside of the CFC's country of incorporation (Cayman Islands), and that the U.S. parent was a related person with respect to the CFC. Thus, the CFC's distributive share of commission income would be foreign base company sales income.

The proposed regulations also would address whether a CFC's distributive share of partnership income can qualify for the exceptions from foreign personal holding company income treatment that are based on the activities performed by the CFC in connection with the property through which it earns the income. The proposed regulations would provide that an exception requiring activity would generally apply if the exception would have applied to the income if the CFC itself had directly earned the income taking into account only the property and activities of the partnership. This requirement is not met if the partnership can qualify for the exception only by taking into account the separate activities of its partners. Thus, for example, if the partnership earns rental income from leasing real property that it owns and with respect to which it performs active and substantial management functions, the CFC partner's distributive share of the rental income can be excluded from subpart F income under the active rents exception of section 954(c)(2)(A) if the rental income is earned from a person that is not a related person with respect to the CFC partner. However, if the partnership owns the real property but the CFC contracts to perform the management functions, the rental income is not excludible under this exception.

These proposed regulations would clarify how the manufacturing exception of § 1.954–3(a)(4) applies in the context of the distributive share rules. The proposed regulations would provide that the manufacturing activities of a partnership may be taken into account under the distributive share rules when the partnership sells the property that it manufactures. As previously noted, the general rules would provide that income that could be foreign base company sales income at the CFC partner level is separately stated and that determinations as to relatedness and the relevant country are made at the partner level. Consistent with the general rules outlined above, these regulations would allow a CFC's distributive share of sales income to be excluded, under the manufacturing exception of § 1.954–3(a)(4), when the partnership manufactures the property that it sells (without regard to the activities of the CFC partner or any other person).

The general rule, described above, would determine whether a CFC partner's distributive share of partnership income is foreign base company services income when the income is earned from performing services for or on behalf of a person that is a related person with respect to the CFC partner. These proposed regulations also would describe how the substantial assistance rule of § 1.954–4(b)(1)(iv) applies when the CFC earns services income through a partnership. When the partnership is performing services for a person unrelated to the CFC partner but the CFC partner, or a related person, provides substantial assistance to the partnership contributing to the performance of those services, the CFC partner and the partnership would be regarded as separate entities and the substantial assistance provided to the partnership by the CFC partner, or a related person, would cause the CFC's partner's distributive share of the services income to be treated as foreign base company services income. Treasury and the IRS are considering applying similar principles to branches of CFCs. Comments are requested on this issue.

Finally, consistent with Rev. Rul. 90–112 (1990–2 C.B. 186), the regulations would provide that, for purposes of section 956, a CFC partner's investment in U.S. property includes the U.S. property held by a partnership to the extent of the CFC's interest in the partnership. Comments are requested as to whether, for purposes of section 956, a CFC partner's interest in a partnership should be based on the CFC's capital interest in the partnership, the CFC's interest in partnership profits, or another standard, such as the facts and circumstances relating to the CFC's interest in the partnership.

Treasury is currently conducting a study to review the provisions of subpart F. The study may examine the foreign base company rules, contract manufacturing, and the use of hybrid partnerships under subpart F. Although comments will be sought separately on the study, comments received on these regulations will be reviewed in connection with the study.

Proposed Effective Date

These regulations are proposed to apply for taxable years of a controlled foreign corporation beginning on or after the date the final regulations are published in the **Federal Register**. For prior periods, the IRS will rely on principles and authorities under subpart F and subchapter K to apply an aggregate approach, (including § 1.701–2(e) and (f) of the regulations for periods for which it is applicable).

Special Analyses

It has been determined that this notice of proposed rulemaking is not a significant regulatory action as defined in Executive Order 12866. Therefore, a regulatory assessment is not required. It has also been determined that section 553(b) of the Administrative Procedures Act (5 U.S.C. chapter 5) does not apply to these regulations, and, because the regulation does not impose a collection of information on small entities, the Regulatory Flexibility Act (5 U.S.C. chapter 6) does not apply. Pursuant to section 7805(f) of the Code, this notice of proposed rulemaking will be submitted to the Chief Counsel for Advocacy of the Small Business Administration for comment on its impact on small business.

Comments and Public Hearing

Before these proposed regulations are adopted as final regulations, consideration will be given to any written comments (preferably a signed original and eight (8) copies) that are timely submitted to the IRS. All comments will be available for public inspection and copying. The IRS and Treasury specifically request comments on the clarity of these proposed regulations and how they may be made easier to understand.

A public hearing has been scheduled for December 5, 2000, at 10 a.m., in room 4718, Internal Revenue Building, 1111 Constitution Avenue NW., Washington DC. Due to building security procedures, visitors must enter at the 10th Street entrance, located between Constitution and Pennsylvania Avenues, NW. In addition, all visitors must present photo identification to enter the building. Because of access restrictions, visitors will not be admitted beyond the immediate entrance area more than 15 minutes before the hearing starts. For information about having your name placed on the building access list to attend the hearing, see the **FOR FURTHER INFORMATION CONTACT** section of this preamble.

The rules of 26 CFR 601.601(a)(3) apply to the hearing.

Persons that wish to present oral comments at the hearing must submit written comments and an outline of topics to be discussed and time to be devoted to each topic (signed original and eight (8) copies) by November 14, 2000.

A period of 10 minutes will be allotted to each person for making comments.

An agenda showing the scheduling of the speakers will be prepared after the deadline for receiving outlines has passed. Copies of the agenda will be available free of charge at the hearing.

Drafting Information

The principal author of these regulations is Valerie Mark of the Office of the Associate Chief Counsel (International), IRS. However, other personnel from the IRS and Treasury Department participated in their development.

List of Subjects in 26 CFR Part 1

Income taxes, Reporting and recordkeeping requirements.

Proposed Amendments to the Regulations

Accordingly, 26 CFR part 1 is proposed to be amended as follows:

PART 1—INCOME TAXES

Paragraph 1. The authority citation for 26 CFR part 1 continues to read in part as follows:

Authority: 26 U.S.C. 7805 * * *

Par. 2. Section § 1.702–1 is amended as follows:

1. Paragraph (a)(8)(ii) is revised.
2. Paragraph (c)(1)(iii) is amended by removing the word ''and''.
3. Paragraph (c)(1)(iv) is amended by removing the period at the end and adding ''; and'' in its place.
4. Paragraph (c)(1)(v) is added.

The addition and revision read as follows:

§ 1.702–1 Income and credits of partner.

(a) * * *

(8) * * *

(ii) Each partner must also take into account separately the partner's distributive share of any partnership item which, if separately taken into account by any partner, would result in an income tax liability for that partner, or for any other person, different from that which would result if that partner did not take the item into account separately. Thus, if any partner is a controlled foreign corporation, as defined in section 957, items of income that would be gross subpart F income if separately taken into account by the controlled foreign corporation must be separately stated for all partners. Under section 911(a), if any partner is a bona fide resident of a foreign country who may exclude from gross income the part of the partner's distributive share which qualifies as earned income, as defined in section 911(b), the earned income of the partnership for all partners must be separately stated. Similarly, all relevant items of income or deduction of the partnership must be separately stated for all partners in determining the applicability of section 183 (relating to activities not engaged in for profit) and the recomputation of tax thereunder for any partner. This paragraph (a)(8)(ii) applies to taxable years beginning on or after the date final regulations are published in the **Federal Register**.

* * * * *

(c) * * *

(1) * * *

(v) In determining whether the de minimis or full inclusion rules of section 954(b)(3) apply.

* * * * *

Par. 3. In § 1.952–1, paragraph (g) is added to read as follows:

§ 1.952–1 Subpart F income defined.

* * * * *

(g) *Treatment of distributive share of partnership income*—

(1) *In general.* A controlled foreign corporation's distributive share of any item of income of a partnership is income that falls within a category of subpart F income described in section 952(a) to the extent the item of income would have been income in such category if received by the controlled foreign corporation directly. For specific rules regarding the treatment of a distributive share of partnership income under certain provisions of subpart F, see §§ 1.954–1(g), 1.954–2(a)(5), 1.954–3(a)(6), and 1.954–4(b)(2)(iii).

(2) *Example.* The application of this paragraph (g) may be illustrated by the following example:

Example. CFC, a controlled foreign corporation, is an 80-percent partner in PRS, a foreign partnership. PRS earns $100 of interest income that is not export financing interest, as defined in section 954(c)(2)(B), from a person unrelated to CFC. This interest income would have been foreign personal holding company income to CFC, under section 954(c), if it had received this income directly. Accordingly, CFC's distributive share of this interest income, $80, is foreign personal holding company income.

(3) *Effective date.* This paragraph (g) applies to taxable years of a controlled foreign corporation beginning on or after the date final regulations are published in the **Federal Register**.

Par. 4. In § 1.954–1, paragraph (g) is added to read as follows:

§ 1.954–1 Foreign base company income.

* * * * *

(g) *Distributive share of partnership income*—(1) *Application of related person and country of organization tests.* Unless otherwise provided, to determine the extent to which a controlled foreign corporation's distributive share of any item of gross income of a partnership would have been subpart F income if received by it directly, under § 1.952–1(g), if a provision of subpart F requires a determination of whether an entity is a related person, within the meaning of section 954(d)(3), or whether an activity occurred within or outside the country under the laws of which the controlled foreign corporation is created or organized, this determination shall be made by reference to such controlled foreign corporation and not by reference to the partnership.

(2) *Examples.* The application of paragraph (g)(1) of this section is illustrated by the following examples:

Example 1. CFC, a controlled foreign corporation organized in Country A, is an 80-percent partner in Partnership, a partnership organized in Country A. All of the stock of CFC is owned by USP, a U.S. corporation. Partnership earns commission income from purchasing Product O on behalf of USP, from unrelated manufacturers in Country B, for sale in the United States. To determine whether CFC's distributive share of Partnership's commission income is foreign base company sales income under section 954(d), CFC is treated as if it purchased Product O on behalf of USP. Under section 954(d)(3), USP is a related person with respect to CFC. Thus, with respect to CFC, the sales income is deemed to be derived from the purchase of personal property on behalf of a related person. Because the property purchased is both manufactured and sold for use outside of Country A, CFC's country of organization, CFC's distributive share of the sales income is foreign base company sales income.

Example 2. (i) CFC1, a controlled foreign corporation organized in Country A, is an 80-percent partner in Partnership, a partnership organized in Country B. CFC2, a controlled foreign corporation organized in Country B, owns the remaining 20 percent interest in Partnership. CFC1 and CFC2 are owned by a common U.S. parent, USP. CFC2 manufactures Product A in Country B. Partnership earns sales income from purchasing Product A from CFC2 and selling it to third parties located in Country B that are not related persons with respect to CFC1 or CFC2. To determine whether CFC1's distributive share of Partnership's sales income is foreign base company sales income under section 954(d), CFC1 is treated as if it purchased Product A from CFC2 and sold it to third parties in Country B. Under section 954(d)(3), CFC2 is a related person with respect to CFC1. Thus, with respect to CFC1, the sales income is deemed to be derived from the purchase of personal property from a related person. Because the property purchased is both manufactured and sold for use outside of Country A, CFC1's country of organization, CFC1's distributive share of the sales income is foreign base company sales income.

(ii) To determine whether CFC2's distributive share of Partnership's sales income is foreign base company sales income, CFC2 is treated as if it directly sold Product A to third parties within Country B. Because Product A is both manufactured and sold for use within CFC2's country of organization, CFC2's distributive share of Partnership's sales income is not foreign base company sales income.

(3) *Effective date.* This paragraph (g) applies to taxable years of a controlled foreign corporation beginning on or after the date final regulations are published in the **Federal Register**.

Par. 5. In § 1.954–2, paragraph (a)(5) is added to read as follows:

§ 1.954–2 Foreign personal holding company income.

(a) * * *

(5) *Special rules applicable to distributive share of partnership income*—(i) [Reserved]

(ii) *Certain other exceptions applicable to foreign personal holding company income.* To determine the extent to which a controlled foreign corporation's distributive share of an item of income of a partnership is foreign personal holding company income, the exceptions contained in section 954(c) that are based on whether the controlled foreign corporation is engaged in the active conduct of a trade or business, including section 954(c)(2), (h) and (i), and paragraphs (b)(2) and (6), (e)(1)(ii) and (3)(ii), (iii) and (iv), (f)(1)(ii), (g)(2)(ii), and (h)(3)(ii) of this section, shall apply only if any such exception would have applied to exclude the income from foreign personal holding company income if the controlled foreign corporation had earned the income directly, determined by taking into account only the activities of, and property owned by, the

partnership and not the separate activities or property of the controlled foreign corporation or any other person.

(iii) [Reserved]

(iv) *Effective date.* This paragraph (a)(5) applies to taxable years of a controlled foreign corporation beginning on or after the date final regulations are published in the **Federal Register**.

* * * * *

Par. 6. In § 1.954–3, paragraph (a)(6) is added to read as follows:

§ 1.954–3 Foreign base company sales income.

(a) * * *

(6) *Special rule applicable to distributive share of partnership income*—(i) *In general.* To determine the extent to which a controlled foreign corporation's distributive share of any item of gross income of a partnership would have been foreign base company sales income if received by it directly, under § 1.952–1(g), the property sold will be considered to be manufactured, produced or constructed by the controlled foreign corporation, within the meaning of paragraph (a)(4) of this section, only if the manufacturing exception of paragraph (a)(4) of this section would have applied to exclude the income from foreign base company sales income if the controlled foreign corporation had earned the income directly, determined by taking into account only the activities of, and property owned by, the partnership and not the separate activities or property of the controlled foreign corporation or any other person.

(ii) *Example.* The application of paragraph (a)(6)(i) of this section is illustrated by the following example:

Example. CFC, a controlled foreign corporation organized under the laws of Country A, is an 80 percent partner in Partnership X, a partnership organized under the laws of Country B. Partnership X performs activities in Country B that would constitute the manufacture of Product O, within the meaning of paragraph (a)(4) of this section, if performed directly by CFC. Partnership X, through its sales offices in Country B, then sells Product O to Corp D, a corporation that is a related person with respect to CFC, within the meaning of section 954(d)(3),for use within Country B. CFC's distributive share of Partnership X's sales income is not foreign base company sales income because the manufacturing exception of paragraph (a)(4) of this section would have applied to exclude the income from foreign base company sales income if CFC had earned the income directly. (The branch rule of paragraph (b) of this section does not apply to these facts).

(iii) *Effective date.* This paragraph (a)(6) applies to taxable years of a controlled foreign corporation beginning on or after the date final regulations are published in the **Federal Register**.

* * * * *

Par. 7. In § 1.954–4, paragraph (b)(2)(iii) is added to read as follows:

§ 1.954–4 Foreign base company services income.

* * * * *

(b) * * *

(2) * * *

(iii) *Special rule applicable to distributive share of partnership income.* A controlled foreign corporation's distributive share of a partnership's services income will be deemed to be derived from services performed for or on behalf of a related person, within the meaning of section 954(e)(1)(A), if the partnership is a related person with respect to the controlled foreign corporation, under section 954(d)(3), and, in connection with the services performed by the partnership, the controlled foreign corporation, or a person that is a related person with respect to the controlled foreign corporation, provided assistance that would have constituted substantial assistance contributing to the performance of such services, under paragraph (b)(2)(ii) of this section, if furnished to the controlled foreign corporation by a related person. This paragraph (b)(2)(iii) applies to taxable years of a controlled foreign corporation beginning on or after the date final regulations are published in the **Federal Register**.

* * * * *

Par. 8. In § 1.956–2, paragraph (a)(3) is added to read as follows:

§ 1.956–2 Definition of United States property.

* * * * *

(a) * * *

(3) *Property owned through partnership.* For purposes of section 956, if a controlled foreign corporation is a partner in a partnership that owns property that would be United States property, within the meaning of paragraph (a)(1) of this section, if owned directly by the controlled foreign corporation, the controlled foreign corporation will be treated as holding an interest in the property equal to its interest in the partnership and such interest will be treated as an interest in United States property. This paragraph (a)(3) applies to taxable years of a controlled foreign corporation beginning on or after the date final regulations are published in the **Federal Register**.

* * * * *

Robert E. Wenzel,

Deputy Commissioner of Internal Revenue.

[FR Doc. 00–23529 Filed 9–19–00; 8:45 am]

BILLING CODE 4830–01–U

DEPARTMENT OF JUSTICE

Bureau of Prisons

28 CFR Parts 545 and 550

[BOP–1093–P]

RIN 1120–AA88

Drug Abuse Treatment Programs: Participation Requirements

AGENCY: Bureau of Prisons, Justice.

ACTION: Proposed rule.

SUMMARY: In this document, the Bureau of Prisons is proposing to amend its regulations on participation requirements for the drug abuse education course and the institution residential drug abuse treatment program. The amendment clarifies the distinction between mandatory and voluntary participation in the drug abuse education course, removes eligibility limitations pertaining to cognitive impairments and learning disabilities, and addresses the effects of non-participation both in the drug abuse education course and in the institution residential drug abuse treatment program. This amendment is intended to encourage inmates to take advantage of the Bureau's drug treatment programs.

DATES: Comments due by November 20, 2000.

ADDRESSES: Rules Unit, Office of General Counsel, Bureau of Prisons, HOLC Room 754, 320 First Street, NW., Washington, DC 20534.

FOR FURTHER INFORMATION CONTACT: Sarah Qureshi, Office of General Counsel, Bureau of Prisons, phone (202) 514–6655.

SUPPLEMENTARY INFORMATION: The Bureau of Prisons is proposing to amend its regulations on drug abuse treatment programs (28 CFR 550) pertaining to the requirements for the drug abuse education course and participation in the institution residential drug abuse treatment program.

Inmates with drug abuse problems who fail to enter drug treatment are at significantly higher risk of poor institutional adjustment, recidivism, and transition problems once released

into the community. Though many inmates take advantage of the Bureau's drug treatment services each year, some inmates who need drug treatment avoid program participation while incarcerated.

The current regulations for the drug abuse education course are contained in § 550.54 and were most recently published in the **Federal Register** on May 25, 1995 (60 FR 27694). These regulations distinguish between ''mandatory'' and ''voluntary'' participation in the drug abuse education course. Participation is mandatory if there is evidence in the inmate's Presentence Investigation that alcohol or other drug use contributed to the commission of the instant offense, alcohol or other drug use was a reason for violation either of supervised release, including parole, or BOP community status (CCC placement) for which the inmate is now incarcerated, or the inmate was recommended for drug programming during incarceration by the sentencing judge. Inmates not qualifying under the mandatory provisions are eligible to volunteer for the drug education program with the approval of the drug abuse treatment coordinator when participation space is available.

The Bureau is revising the regulation to remove the terms ''mandatory,'' ''voluntary,'' and ''sanctions''. Participation in the drug abuse education program is not intended to be mandatory in the sense that a refusal to participate would result in a disciplinary action. The intent is that if the inmate chooses to refuse to participate, certain consequences may follow which affect the inmate's eligibility for other program assignments (for example, work performance pay levels or community program eligibility). The Bureau is also adding as an additional eligibility criterion evidence of a history of alcohol or other drug use. This history of alcohol or other drug use need not be limited to circumstances surrounding the instant offense.

The current provisions for the institution residential drug abuse treatment program are contained in § 550.56 and were most recently published in the **Federal Register** on May 25, 1995 (60 FR 27694). The institution residential drug abuse treatment program allows participation by inmates to be voluntary. Currently, inmates may receive incentives for their satisfactory involvement in the residential program. For example, inmates may be eligible for financial achievement awards, recommendation for the maximum 180-day community corrections center placement, and early release consideration (provided they meet the strict criteria for early release) upon full program completion.

In an effort to encourage more inmates to participate in the residential drug abuse treatment program, the Bureau is proposing to establish enhanced incentives at selected institutions. The three additional incentives being proposed in this document are tangible achievement awards as permitted by the Warden and allowed by the regulations governing personal property (for example, textbooks, journals, drug abuse program t-shirts), pencils, photographs of treatment ceremonies, and consideration for a nearer release transfer for medium and low security inmates. Nearer release transfers ordinarily are made to place the inmate in an institution nearer the inmate's release destination or to facilitate the release process. While the Bureau attempts to place inmates in institutions which are reasonably close to anticipated release destinations, other factors pertaining to inmate population management may mean that an inmate is not always optimally placed. In those instances where an inmate's placement has been affected by other factors, earning consideration for a nearer release transfer may be an additional mitigating factor in a subsequent decision to transfer the inmate to an institution nearer to the inmate's anticipated release destination.

The Bureau is also proposing to encourage participation by reluctant inmates with an identified treatment need through the use of specified consequences for non-participants. An inmate who has an identified treatment need but who refuses to participate in a residential treatment program at an institution which offers enhanced incentives will be subject to the following consequences: (1) If the inmate is eligible for parole, staff will notify the U.S. Parole Commission of the inmate's treatment need and the subsequent failure to participate in the residential drug abuse treatment program; (2) the inmate is not eligible for furlough (other than possibly an emergency furlough); (3) the inmate is not eligible for more than 90 days placement in community-based programs (for example, placement in a community corrections center); (4) the inmate is not eligible for performance pay above maintenance pay level, or for bonus or vacation pay; and (5) the inmate is not eligible for a Federal Prison Industries work assignment (unless the Warden makes exception on the basis of work program labor needs). For the sake of consistency, the consequences pertaining to work assignment pay are also being revised in the provisions which pertain to the drug abuse education course (new § 550.54(e)).

The use of enhanced incentives at selected institutions together with the consequences of non-participation is intended to permit the Bureau to evaluate the effectiveness of a more aggressive approach in drug abuse treatment program placement. The Bureau assumes that these revisions will result in increased participation by inmates, particularly with respect to those inmates who do not meet the strict criteria for early release consideration but who do qualify for nearer release transfer. While the Bureau may further adjust the number of selected institutions to be used in this evaluation, any system-wide application of the additional incentives/consequences would be implemented through a separate rulemaking proceeding.

The Bureau's regulations for both the drug abuse education course and the institution residential treatment program contain provisions precluding participation by inmates with learning disabilities or mental impairments (§§ 550.54(c) and 550.56(a)(2)). In actuality, the Bureau has been able to make reasonable accommodations to allow such inmates to participate in the programs. The Bureau believes that these provisions are not necessary and accordingly has removed them in this proposed revision.

The Bureau's regulations on inmate work and performance pay (28 CFR 545, subpart C) are being amended to conform with these requirements. The Bureau's regulations on furloughs (28 CFR 570, subpart C) do not need to be amended because the Warden may deem the inmate's refusal to participate a failure to demonstrate sufficient responsibility to provide reasonable assurance that furlough requirements will be met (see § 570.34(d)).

Executive Order 12866

This rule falls within a category of actions that the Office of Management and Budget (OMB) has determined not to constitute ''significant regulatory actions'' under section 3(f) of Executive Order 12866 and, accordingly, it was not reviewed by OMB.

Executive Order 13212

This regulation will not have substantial direct effects on the States, on the relationship between the national government and the States, or on distribution of power and responsibilities among the various

levels of government. Therefore, in accordance with Executive Order 12612, it is determined that this rule does not have sufficient federalism implications to warrant the preparation of a Federalism Assessment.

Regulatory Flexibility Act

The Director of the Bureau of Prisons, in accordance with the Regulatory Flexibility Act (5 U.S.C. 605(b)), has reviewed this regulation and by approving it certifies that this regulation will not have a significant economic impact upon a substantial number of small entities for the following reasons: This rule pertains to the correctional management of offenders committed to the custody of the Attorney General or the Director of the Bureau of Prisons, and its economic impact is limited to the Bureau's appropriated funds.

Unfunded Mandates Reform Act of 1995

This rule will not result in the expenditure by State, local and tribal governments, in the aggregate, or by the private sector, of $100,000,000 or more in any one year, and it will not significantly or uniquely affect small governments. Therefore, no actions were deemed necessary under the provisions of the Unfunded Mandates Reform Act of 1995.

Small Business Regulatory Enforcement Fairness Act of 1996

This rule is not a major rule as defined by § 804 of the Small Business Regulatory Enforcement Fairness Act of 1996. This rule will not result in an annual effect on the economy of $100,000,000 or more; a major increase in costs or prices; or significant adverse effects on competition, employment, investment, productivity, innovation, or on the ability of United States-based companies to compete with foreign-based companies in domestic and export markets.

Plain Language Instructions

We want to make Bureau documents easier to read and understand. If you can suggest how to improve the clarity of these regulations, call or write Sarah Qureshi at the address listed above.

List of Subjects

28 CFR Part 545

Prisoners.

28 CFR Part 550

Prisoners.

Kathleen Hawk Sawyer,

Director, Bureau of Prisons.

Accordingly, pursuant to the rulemaking authority vested in the Attorney General in 5 U.S.C. 552(a) and delegated to the Director, Bureau of Prisons in 28 CFR 0.96(p), we propose to amend parts 545 and 550 in subchapter C of 28 CFR, chapter V as follows.

Subchapter C—Institutional Management

PART 550—DRUG PROGRAMS

1. The authority citation for part 550 continues to read as follows:

Authority: 5 U.S.C. 301; 18 U.S.C. 3521–3528, 3621, 3622, 3624, 4001, 4042, 4046, 4081, 4082 (Repealed in part as to offenses committed on or after November 1, 1987), 5006–5024 (Repealed October 12, 1984 as to offenses committed after that date), 5039; 21 U.S.C. 848; 28 U.S.C. 509, 510; Title V, Pub. L. 91–452, 84 Stat. 933 (18 U.S.C. Chapter 223); 28 CFR 0.95–0.99.

2. Section 550.54 is revised to read as follows:

§ 550.54 Drug abuse education course.

(a) *Purpose.* The drug abuse education course is provided at all institutions. The purpose of the drug abuse education course is to inform inmates of the consequences of drug/alcohol abuse and addiction and to motivate inmates in need of drug abuse treatment to apply for further drug abuse treatment while incarcerated and upon release.

(b) *Placement.* (1) Staff are to give primary consideration for placement to an inmate who has been sentenced or returned to custody as a violator after September 30, 1991, when unit and/or drug abuse treatment staff determine through a combination of interview and file review that:

(i) There is evidence that alcohol or other drug use contributed to the commission of the instant offense;

(ii) Alcohol or other drug use was a reason for violation either of supervised release, including parole, or BOP community status (CCC placement) for which the inmate is now incarcerated;

(iii) The inmate was recommended for drug programming during incarceration by the sentencing judge; or,

(iv) There is evidence of a history of alcohol or other drug use.

(2) Staff may also consider for placement an inmate who requests to participate in the drug abuse education program but who does not meet the criteria of paragraph (b)(1) of this section.

(3) An inmate ordinarily will not be considered for placement in the drug abuse education course for the following reasons:

(i) The inmate does not have enough time remaining to serve to complete the drug abuse education course;

(ii) The inmate volunteers for, enters and completes a residential drug abuse treatment program, or

(iii) The inmate completes a structured drug abuse treatment program at one of the Bureau of Prisons' Intensive Confinement Centers (ICC).

(c) *Written consent.* All inmates who enter the drug abuse education course are required to sign an agreement to participate prior to admission to the course.

(d) *Completion.* Completion of the drug abuse education course requires attendance and participation during course sessions and a passing grade of at least 70 percent on an examination given at the end of the course. Inmates who are placed in the course under paragraph (b)(1) of this section ordinarily are provided at least three chances to pass the final examination before privileges are lost or effects of non-participation (see paragraph (e) of this section) are invoked. A certificate of achievement will be awarded to all who successfully complete the program. A copy of this certificate will be forwarded to the unit team for placement in the inmate's central file.

(e) *Effects of non-participation.* (1) An inmate who is considered for placement under paragraph (b)(1) of this section and who refuses participation or is placed in a treatment program pursuant to paragraph (b)(1) and withdraws, is expelled, or otherwise fails to meet attendance and examination requirements:

(i) Is not eligible for performance pay above maintenance pay level, or for bonus pay, or vacation pay;

(ii) Is not eligible for a Federal Prison Industries work program assignment (unless the Warden makes exception on the basis of work program labor needs);

(iii) Is not eligible for community programs.

(2) Inmates may be permitted to receive work promotions during their participation or while on a ''waiting list'' for the drug abuse education course. The Warden may make exceptions to the provisions of this paragraph for good cause with reasons for such exceptions documented in writing.

3. In § 550.56, paragraph (a)(2) is removed, and paragraphs (a)(3) through (5) are redesignated as paragraphs (a)(2) through (4), paragraphs (b) and (d)(3) are revised, and paragraph (e) is added to read as follows:

§ 550.56 Institution residential drug abuse treatment program.

* * * * *

(b) *Application/Referral/Placement.* An inmate may be identified for referral and evaluation for the residential drug abuse treatment program by unit or drug treatment staff or apply for the program by submitting a request to a staff member (ordinarily, a member of the inmate's unit team or the drug abuse treatment coordinator). The decision on placement is made by the drug abuse treatment coordinator. While participation in the residential drug abuse treatment program is voluntary, an inmate who refuses to participate after the decision on placement is made is subject to the provisions of paragraph (e) of this section.

* * * * *

(d) * * *

(3) An inmate who withdraws or is removed from the residential program may be returned to his/her prior institution (when the inmate had been specifically transferred for the purpose of program participation).

(e) *Effects of non-participation.* An inmate who refuses to participate after being selected by the drug abuse treatment coordinator for treatment at an institution that authorizes enhanced incentives (see § 550.57(a)(2)), or who withdraws from or is otherwise removed is subject to the following:

(1) Where applicable, staff are to notify the United States Parole Commission of the inmate's need for treatment and the inmate's failure to participate in the residential drug abuse treatment program.

(2) The inmate is not eligible for furlough (other than possibly an emergency furlough).

(3) The inmate is not eligible for more than 90 days community-based program placement.

(4) The inmate is not eligible for performance pay above maintenance pay level, or for bonus pay, or vacation pay.

(5) The inmate is not eligible for a Federal Prison Industries work program assignment (unless the Warden makes exception on the basis of work program labor needs).

4. In § 550.57, paragraph (a) is revised to read as follows:

§ 550.57 Incentives for residential drug abuse treatment program participation.

(a) An inmate may receive incentives for his or her satisfactory participation in the residential program. In addition to the basic incentives listed in paragraph (a)(1) of this section, an institution may offer enhanced incentives as listed in paragraph (a)(2) of this section.

(1) *Basic incentives.* (i) Limited financial awards, based upon the inmate's achievement/completion of program phases.

(ii) Consideration for the maximum period of time (currently 180 days) in a Community Corrections Center placement, provided the inmate is otherwise eligible for this designation.

(iii) Local institution incentives such as preferred living quarters or special recognition privileges.

(iv) If eligible under § 550.58, consideration for early release.

(2) *Enhanced incentives.* (i) Tangible achievement awards as permitted by the Warden and allowed by the regulations governing personal property (see 28 CFR part 553).

(ii) Photographs of treatment ceremonies may be sent to the inmate's family.

(iii) Formal consideration for a nearer release transfer for medium and low security inmates.

* * * * *

PART 545—WORK AND COMPENSATION

5. The authority citation for part 545 continues to read as follows:

Authority: 5 U.S.C. 301; 18 U.S.C. 3013, 3571, 3572, 3621, 3622, 3624, 3663, 4001, 4042, 4081, 4082 (Repealed in part as to offenses committed on or after November 1, 1987), 4126, 5006–5024 (Repealed October 12, 1984 as to offenses committed after that date), 5039; 28 U.S.C. 509, 510; 28 CFR 0.95–0.99.

6. In § 545.25, paragraph (d) is revised to read as follows:

§ 545.25 Eligibility for performance pay.

* * * * *

(d) An inmate who refuses participation, withdraws, is expelled, or otherwise fails attendance requirements of the drug abuse education course or the residential drug abuse treatment program is subject to the limitations specified in § 550.54(e) or § 550.56(e) of this chapter.

[FR Doc. 00–24052 Filed 9–19–00; 8:45 am]

BILLING CODE 4410–05–P

DEPARTMENT OF TRANSPORTATION

Coast Guard

33 CFR Parts 26, 161, and 165

[USCG–1998–4399]

RIN 2115–AF75

Vessel Traffic Service Lower Mississippi River

AGENCY: Coast Guard, DOT.

ACTION: Proposed rulemaking; notice of public meeting.

SUMMARY: The Coast Guard announces a public meeting on October 24, 2000, to receive comments on a proposed rulemaking establishing a Vessel Traffic Service (VTS) on the Lower Mississippi River. The meeting will be held at the Marine Safety Office in New Orleans, LA.

DATES: This public meeting will be held on Tuesday, October 24, 2000, from 9 a.m. to 5 p.m. The meeting may close early if all business is finished.

ADDRESSES: The public meeting will be held in the hearing room of the Marine Safety Office, 1615 Poydras Street, New Orleans, LA 70112–1254.

FOR FURTHER INFORMATION CONTACT: For questions regarding the meeting location, contact Lieutenant Junior Grade Ken Mills, Vessel Traffic Service, telephone 504–589–2780. For questions regarding the proposed rulemaking, contact Mr. Jorge Arroyo, Office of Vessel Traffic Management,(G–MWV), Coast Guard, telephone 202–267–6277.

SUPPLEMENTARY INFORMATION: The notice of proposed rulemaking (NPRM) on a Vessel Traffic Service (VTS) on the Lower Mississippi River, published on April 26, 2000 (65 FR 24616), encouraged interested persons to participate in this rulemaking by submitting written data, views, or arguments by July 25, 2000. In response to several requests for additional time, the Coast Guard extended the comment period on the NPRM until December 1, 2000 (65 FR 50479). The NPRM and comments already received may be viewed at http://dms.dot.gov. The Coast Guard also received several requests for a public meeting at which interested parties could present their comments. This meeting is in response to those requests.

Information on Service for Individuals With Disabilities

For information on facilities or services for individuals with disabilities or to request special assistance at the public meeting, contact Lieutenant

Junior Grade Ken Mills at the phone number under **FOR FURTHER INFORMATION CONTACT.**

Public Meeting

The Coast Guard will hold a public meeting regarding this proposed rulemaking on Tuesday, October 24, 2000, from 9 a.m. to 5 p.m. The meeting will be held at the address under **ADDRESSES.**

Dated: September 15, 2000.

Joseph J. Angelo,

Acting Assistant Commandant for Marine Safety and Environmental Protection.

[FR Doc. 00–24180 Filed 9–19–00; 8:45 am]

BILLING CODE 4910–15–U

ENVIRONMENTAL PROTECTION AGENCY

40 CFR Parts 51 and 85

[FRL–6871–4]

RIN 2060–AJ03

Amendments to Vehicle Inspection Maintenance Program Requirements Incorporating the Onboard Diagnostic Check

AGENCY: Environmental Protection Agency.

ACTION: Notice of proposed rulemaking.

SUMMARY: This document proposes both substantive and minor revisions to the Motor Vehicle Inspection/Maintenance (I/M) requirements to provide additional flexibility to state I/M programs by allowing such programs to replace traditional I/M tests on model year 1996 and newer vehicles so equipped with a check of the onboard diagnostic (OBD) system. Additionally, the proposed amendments would: extend the deadline for beginning OBD inspections from January 1, 2001 to January 1, 2002; revise and simplify the failure criteria for the OBD check; address State Implementation Plan (SIP) credit modeling for the OBD check; allow for limited exemptions from some OBD check failure and/or rejection criteria for certain model year vehicles; and correct a typographical error in the current basic I/M performance standard regarding OBD–I/M vehicle coverage. Lastly, this document solicits public comment on how to address the issue of repair waivers for OBD-equipped vehicles and the possibility of extending the deadline for implementing OBD–I/M checks even further.

DATES: Written comments on this proposal must be received no later than October 20, 2000.

ADDRESSES: Interested parties may submit written comments (in duplicate if possible) to Public Docket No. A–2000–16. It is requested that a duplicate copy be submitted to David Sosnowski at the address in the **FOR FURTHER INFORMATION CONTACT** section. The docket is located at the Air Docket, Room M–1500 (6102), Waterside Mall S.W., Washington, DC 20460. The docket may be inspected between 8:30 a.m. and 12 noon and between 1:30 p.m. until 3:30 p.m. on weekdays. A reasonable fee may be charged for copying docket material.

FOR FURTHER INFORMATION CONTACT: David Sosnowski, Office of Transportation and Air Quality, Transportation and Regional Programs Division, 2000 Traverwood, Ann Arbor, Michigan, 48105. Telephone (734) 214–4823.

SUPPLEMENTARY INFORMATION:

I. Table of Contents
II. Summary of Proposal
III. Authority
IV. Background of the Proposed Amendments
  A. Amendments to Extend the Implementation Deadline
  B. Amendments to Reduce Testing Burden
  C. SIP Credit Modeling Amendments
  D. OBD–I/M Failure Criteria Amendments
  E. OBD–I/M Rejection Criteria Amendments
  F. Technical Amendment
V. Discussion of Major Issues
  A. Emission Impact of the Proposed Amendments
  B. Impact on Existing and Future I/M Programs
VI. Economic Costs and Benefits
VII. Public Participation
VIII. Administrative Requirements
  A. Administrative Designation
  B. Reporting and Recordkeeping Requirement
  C. Regulatory Flexibility Act
  D. Unfunded Mandates Act
  E. Executive Order 13132: Federalism
  F. Executive Order 13084: Consultation and Coordination With Indian Tribal Governments
  G. Executive Order 13045: Protection of Children From Environmental Health Risks and Safety Risks
  H. National Technology Transfer and Advancement Act

II. Summary of Proposal

Under the Clean Air Act as amended in 1990, 42 U.S.C. 7401 *et seq.*, states required to implement vehicle inspection and maintenance (I/M) programs were further required to incorporate a check of the onboard diagnostic (OBD) computer as part of those programs. On November 5, 1992, the U.S. Environmental Protection Agency (EPA) published in the **Federal Register** (40 CFR part 51, subpart S) a rule related to state air quality implementation plans for I/M programs (hereafter referred to as the I/M rule; see 57 FR 52950). At the time the 1992 rule was published, certification regulations for OBD had not been finalized, and so EPA reserved space in the I/M rule to address OBD–I/M requirements at some later date. Since 1992, EPA has twice amended the I/M rule to address various aspects of the OBD–I/M check—first, on August 6, 1996, and again on May 4, 1998. EPA is proposing today to further amend the I/M rule and OBD testing requirements to provide states with the greater flexibility they need to better meet local needs, to update requirements based upon technological advances, and to optimize program efficiency and cost effectiveness.

With today's document EPA proposes to: (1) Extend the current deadline for mandatory implementation of the OBD–I/M inspection from January 1, 2001 to January 1, 2002; (2) clarify that I/M programs may use periodic checks of the OBD system on model year (MY) 1996 and newer OBD-equipped vehicles in lieu of (as opposed to in addition to) existing exhaust and evaporative system purge and fill-neck pressure tests on those same vehicles; (3) establish the modeling methodology to be used by states in their State Implementation Plans (SIPs) to account for the replacement of traditional I/M tests by OBD–I/M testing and repair, prior to release of MOBILE6 and subsequent iterations of EPA's mobile source emission factor model; (4) revise and simplify the current list of Diagnostic Trouble Codes (DTCs) that constitute the OBD–I/M failure criteria to include any DTC that leads to the dashboard Malfunction Indicator Light (MIL) being commanded on; (5) provide for exemptions from specific readiness code rejection criteria on OBD-equipped vehicles based upon vehicle model year; and (6) correct a typographical error in the basic I/M performance standard's OBD coverage (which currently applies OBD–I/M testing to both light-duty vehicles and light-duty trucks) to limit such testing coverage to light-duty vehicles only, for the purpose of establishing the minimum, basic I/M performance standard.

The goal of these proposed amendments is to update and streamline requirements and to remove regulatory obstacles that would impede the effective implementation of the OBD–I/M testing required of all I/M programs under the Clean Air Act as amended in 1990. By extending the deadline by which states must begin implementation of OBD–I/M inspections, EPA hopes to provide states the time necessary to better educate the public and the testing

and repair industries regarding this important emission control technology, and to reduce the potential for start-up difficulties that have undercut previous I/M efforts in many areas. EPA also hopes to help states maximize the efficiency and cost effectiveness of their I/M programs by allowing them to eliminate functionally redundant testing requirements. That said, it should be pointed out that it is not the goal of this proposal to provide comprehensive guidance on how to successfully implement OBD–I/M testing in an I/M program. Separate guidance addressing the non-regulatory aspects of OBD–I/M implementation will be issued by EPA in conjunction with today's proposal and made available to the public via EPA's web site and by request to the person listed in the **FOR FURTHER INFORMATION CONTACT** section of this document.

Today's proposed amendments are based upon EPA's findings gathered during three separate OBD–I/M pilot studies, which focused on the following aspects of OBD–I/M testing: (1) OBD's effectiveness as compared to existing exhaust emission testing; (2) OBD's effectiveness as compared to existing evaporative system testing; and (3) the unique implementation issues associated with incorporating checks of the OBD system into a traditional I/M setting. Elements of today's proposal are also based upon EPA's discussions with states regarding their preparedness for OBD–I/M testing as well as on recommendations made by the OBD Workgroup of the Mobile Source Technical Review Subcommittee established under the Federal Advisory Committee Act (FACA). The results of those pilot studies and the FACA workgroup recommendations can be found in the docket for this proposal. Copies of those materials may be obtained from the docket directly, or by contacting the person identified in the **FOR FURTHER INFORMATION CONTACT** section of this document.

III. Authority

Authority for the rule changes proposed in this document is granted to EPA by sections 182, 202, 207, and 301 of the Clean Air Act as amended (42 U.S.C. 7401, *et seq.*).

IV. Background of the Proposed Amendments

The Clean Air Act as amended in 1990 (CAA or Act) requires EPA to set guidelines for states to follow in designing and running both basic and enhanced I/M programs. The Act also established certain minimum design specifications for these programs, including, among other things, a requirement that both basic and enhanced I/M programs conduct periodic inspections of the onboard diagnostic (OBD) system of vehicles so equipped. When EPA published the original I/M rule in 1992, emission-based federal certification standards for OBD were still being developed. To address the Act's OBD–I/M requirement, EPA reserved sections in the 1992 I/M rule to be amended at some future date.

Although the federal requirement for OBD as an element of vehicle design began with model year (MY) 1994, manufacturers were allowed to request waivers on vehicles for MY 1994–95, so that the current generation of OBD (also known as OBDII) was not required on *all* light-duty cars and trucks sold in this country until MY 1996. On August 6, 1996, EPA published amendments to the I/M rule establishing OBD–I/M performance standard and SIP requirements. The 1996 amendments also specified data collection, analysis, and summary reporting requirements for the OBD–I/M testing element; established OBD test equipment requirements and the OBD test result reporting format; and identified those conditions that would result in either an OBD–I/M failure or rejection. Lastly, the August 6, 1996 amendments revised 40 CFR part 85, subpart W to establish OBD–I/M as an official performance warranty short test under section 207(b) of the Act.

At the time the original OBD–I/M requirements were established, it was not practical to evaluate the real-world, in-use performance of OBD because the vehicles in question were still too new and the number of those vehicles in need of repair were too few to make pilot testing worthwhile.[1] Therefore, in 1998, EPA further amended its OBD–I/M requirements to delay the date by which I/M programs must begin OBD testing to no later than January 1, 2001

One of the primary reasons for delaying the deadline for beginning OBD–I/M testing was to give EPA time to evaluate the OBD check as an I/M program element and to give states time to prepare for implementation. In conducting its evaluation of OBD, however, EPA found that identifying and recruiting OBD-equipped vehicles in need of repair proved more difficult and time-consuming than originally anticipated. As a result, EPA has only recently completed its preliminary assessment of OBD effectiveness and implementation issues. During the course of these evaluations, however, it became clear that certain regulatory changes were needed to ensure the smooth implementation of OBD–I/M testing by the states. EPA is therefore proposing to further extend the deadline for OBD–I/M start-up from January 1, 2001 to January 1, 2002, to give states the time necessary to address the issues raised by today's proposed amendments. This element of today's proposal is discussed in more detail below, under section A, ''Amendments to Extend the Implementation Deadline.''

EPA's assessment of OBD is based upon data gathered during three separate OBD–I/M pilot studies. The focus, general design, and results of those studies are discussed briefly below. The complete results of the pilot studies—including EPA's analysis of its findings—can be found in the Technical Support Document (TSD) for this proposal, copies of which are available in the docket or by contacting the person listed in the **FOR FURTHER INFORMATION CONTACT** section of this document.

The first pilot study focused on assessing the effectiveness of the OBD check as an I/M test relative to the IM240, which is generally recognized as the most rigorous and accurate tailpipe inspection currently available for use by I/M programs. That said, the ''gold standard'' for all I/M tests remains the Federal certification test for new vehicles established under section 206(a)(1) of the Act (also known as the Federal Test Procedure or FTP). Section 207(b) of the Act requires that all I/M tests demonstrate a reasonable correlation to the FTP. Therefore, in conducting its pilot testing, EPA compared both the OBD–I/M and IM240 test results to the FTP results on a per-vehicle basis. Between October 1997 and September 1999, 201 vehicles failing either the IM240, the OBD–I/M check, or both were recruited for this study; each received properly preconditioned, lab-grade IM240, OBD–I/M, and FTP tests, both before and after repairs. What EPA found was that not only did the OBD–I/M check catch most of the same high emitters identified by the IM240 (while avoiding the vehicles falsely failed by that particular test), it also identified vehicles in need of maintenance and/or repair prior to their

[1] It may be argued that such is still the case, especially given the difficulty EPA experienced trying to find MY 1996 and newer OBD-equipped vehicles with naturally occurring OBD failures to participate in its pilot studies. EPA recently completed testing and has begun analyzing the results from a study of high mileage, OBD-equipped vehicles including 33 vehicles with mileages of 100,000 miles or more. EPA recognizes the need to continue its testing of in-use, OBD-equipped vehicles, with particular attention being paid to the durability and reliability of such systems on older, high mileage vehicles.

becoming high emitters, thus acting not only as a pollution *reduction* strategy, but also as a pollution *prevention* measure. The results of this pilot are discussed in more detail below, under section B, ''Amendments to Reduce Testing Burden.''

The second pilot study focused on assessing the effectiveness of OBD–I/M testing at identifying evaporative system failures, such as leaks and purge system malfunction, and determining the emission-reduction potential of correcting those failures, once identified. Like the OBD tailpipe pilot discussed above, the OBD–I/M evaporative system monitoring results were compared to the FTP results for the same vehicles. Testing for this pilot ran from March 1999 to May 2000, and included a total of 30 vehicles. Unlike the OBD tailpipe study discussed above, the OBD evaporative pilot involved the use of induced evaporative system failures, as opposed to the recruitment of actual, in-use failures. Induced failures were used due to the difficulty EPA had in finding MY 1996+ OBD-equipped vehicles with naturally occurring evaporative system problems, which, in turn, was due to the relative newness of the vehicles in question, and the observation that the vast majority of naturally occurring problems were attributable to loose gas caps. Use of induced evaporative system failures thus allowed EPA to more thoroughly investigate the effectiveness of OBD systems in detecting a variety of potential in-use failures. Unlike tailpipe problems which are largely a function of mileage accumulation and general wear-and-tear, evaporative system problems tend to be a function of vehicle age, as the rubber components of the system lose elasticity and become brittle and more leak-prone. What EPA found was that in the vast majority of cases, the induced failure was accurately identified by the OBD system, that substantial emission reductions were achieved as a result of repairing the failures, and that the OBD computer responded to repairs by correctly verifying that the failure conditions had been removed (*i.e.*, when the vehicle was operated to reset the evaporative system readiness flags, no DTCs or illuminated MILs were observed).

In addition to these findings, an earlier EPA-sponsored FTP testing program showed high evaporative emissions from leaking gas caps. Furthermore, in comparing the test results for gas cap tests versus OBD-based evaporative system tests from the Wisconsin I/M program's data, EPA found that the gas cap test failed considerably more vehicles than were identified by the OBD evaporative system monitors alone. This result is not too surprising, given the more stringent test criteria for the gas cap test. Based on these findings, EPA believes that continuing to conduct the gas cap check on OBD-equipped vehicles (and replacing those gas caps that fail the check) is a good supplement to OBD–I/M testing. EPA therefore recommends that the gas cap check be conducted in concert with OBD testing. However, the gas cap check is the only test that EPA recommends be continued in conjunction with OBD–I/M testing, and for which additional credit will be available in MOBILE6. The results of the OBD evaporative pilot are discussed in more detail below, under section B, ''Amendments to Reduce Testing Burden.''

The last of the three OBD–I/M pilot studies was aimed at identifying the real-world implementation issues associated with OBD–I/M testing and was conducted using data gathered from the Wisconsin enhanced I/M test lanes, where OBD checks were being implemented voluntarily by the state. One portion of the study was conducted under contract to EPA by Sierra Research. This portion of the study looked at data related to program implementation from May 1998 and July 1998 and included paired IM240 and OBD testing on over 2,500 MY 1996+ OBD-equipped vehicles. Separate from the Sierra Research analysis, EPA looked at data from Wisconsin's I/M program [2] for the last eight months of 1999, which included IM240, gas cap, and OBD–I/M test results on approximately 94,000 MY 1996+ vehicles. In reviewing these two sets of real-world I/M data, EPA identified two OBD-related implementation issues: (1) unset OBD readiness flags, and 2) atypical OBD data link connector (DLC) locations.

Regarding the first—unset readiness flags—EPA found that when it excluded vehicles for which corrective measures are being taken by the manufacturers, roughly 3% of MY 1996 vehicles have unset readiness flags for the catalyst and/or evaporative system monitors, and that this number dropped to below 1% for MY 1998 vehicles. This issue is discussed in more detail below, under section E, ''OBD–I/M Rejection Criteria Amendments.''

Regarding the second problem area—atypical DLC locations—EPA has developed a database of DLC locations based upon its Wisconsin data and manufacturer-supplied information. Electronic copies of this database are available by contacting Arvon Mitcham at (734)214–4522. EPA has found that the development of this database and increased inspector experience has eliminated DLC location as a problem area in the Wisconsin program.

Coincident with the pilot testing described above and the development of today's proposal, EPA staff participated in an OBD Workgroup which was formed by the Mobile Source Technical Review Subcommittee, itself established under the Federal Advisory Committee Act (FACA). The OBD Workgroup included members representing a broad range of OBD and I/M stakeholders (for a list of workgroup members, see the docket). EPA shared the results of its pilot studies with the OBD Workgroup while those studies were still in process and used the workgroup's suggestions and recommendations as a resource to guide the studies' progress. During the course of these discussions, FACA workgroup members made recommendations concerning regulatory revisions needed to facilitate the smooth implementation of OBD–I/M testing. Those recommendations have been considered and addressed in today's proposal. Copies of the FACA workgroup recommendations are available from the docket or by contacting the person listed in the **FOR FURTHER INFORMATION CONTACT** section of this document.

Today's proposals and EPA's rationale for each are discussed under separate headings below.

A. Amendments To Extend the Implementation Deadline

1. What Was the Original Deadline?

The 1992 I/M rule was first amended in August 1996 to establish the original OBD–I/M requirements. These requirements assumed dual testing of OBD–equipped vehicles with both traditional I/M tests and the OBD–I/M check, and included an implementation deadline of January 1, 1998 for all I/M areas, with the exception of those areas qualifying for the Ozone Transport Region (OTR) low enhanced performance standard, which were allowed to start OBD testing one year later, by January 1, 1999. Although testing of the OBD system was required to start in 1998 or 1999, depending upon the area, states were not required to fail vehicles on the basis of OBD–I/M testing until January 1, 2000. The first cycle of OBD–I/M testing was intended to be advisory and was to be conducted

[2] Wisconsin is one of a handful of I/M states that have voluntarily opted to begin OBD–I/M testing early. Currently, Wisconsin is not failing vehicles on the basis of their OBD–I/M test results. During the current phase-in period, OBD–I/M test results are purely advisory.

mainly as a means of gathering data on the effectiveness of OBD checks relative to other, more traditional I/M tests. At the time the original OBD–I/M requirements were promulgated in 1996, OBD-equipped vehicles were still brand new and EPA had no basis for affording SIP credit for what was essentially an untested test type. EPA's original intention was to analyze data gathered by the states during the first, advisory phase of OBD–I/M testing, and to use this analysis as the basis for establishing SIP credit during the second, and mandatory phase of OBD–I/M.

Subsequent to the original 1996 requirements, EPA concluded that it was not appropriate to require states to perform what amounted to mandatory pilot testing on behalf of the Agency. Therefore, on May 4, 1998, EPA revised its original OBD–I/M requirements to delay the date by which I/M programs were to begin OBD–I/M testing to no later than January 1, 2001. The goal of this delay was to give EPA time to evaluate the OBD check as an I/M program element based on its own pilot testing, to develop an appropriate level of SIP credit for OBD–I/M testing, to determine whether dual testing was necessary or desirable, and to give states time to better prepare for the eventual implementation of OBD–I/M testing.

2. What Regulatory Change Does EPA Propose?

In conducting its evaluation of OBD–I/M testing, EPA found that identifying and recruiting OBD-equipped vehicles in need of repair proved more difficult and time-consuming than originally anticipated. As a result, EPA has only recently completed its preliminary assessment of OBD effectiveness. Nevertheless, based upon this assessment, it is clear that rule changes are needed to ensure the smooth implementation of OBD–I/M testing by the states. EPA is therefore proposing to further extend the deadline for OBD–I/M start-up from January 1, 2001 to January 1, 2002, to give states the time necessary to address the issues raised by today's proposed amendments. EPA believes that such a delay is appropriate, given the changes needed, and the lateness of these proposed changes relative to the current 2001 deadline.

EPA would also like to solicit comment on whether a slightly longer delay is necessary, given the states' possible need to revise rules, software, test procedures, SIPs, *et cetera* to address today's proposed amendments. EPA asks that states also consider the role that public outreach and technician training will play in their preparation for OBD–I/M testing in conjunction with their response to this request for comments.

B. Amendments To Reduce Testing Burden

1. Does OBD Technology Work?

The OBD–I/M test effectiveness pilot studies for tailpipe and evaporative emission testing had two primary goals: (1) To determine whether or not OBD technology was actually meeting its design expectations in the real world, in terms of identifying high emitting vehicles and vehicles in need of repair and/or maintenance and (2) to determine whether OBD–I/M checks can replace traditional I/M tests like the IM240 and the purge and pressure tests without a significant loss in emission reductions. With regard to the first goal, EPA found that OBD identified nearly all of the vehicles later confirmed as high emitters on the FTP. Furthermore, EPA found that OBD frequently identified vehicles in need of repair and/or maintenance prior to their actually becoming high emitters, thus preventing high emissions as opposed to simply reducing them after the fact. Therefore, EPA concluded that OBD technology is successfully meeting its design expectations in the real world.

With regard to the second goal, the OBD tailpipe and OBD evaporative system effectiveness pilots reached slightly different conclusions regarding whether or not OBD–I/M checks can completely replace existing I/M tests. Therefore, we will look at the two pilots separately, starting with the OBD tailpipe effectiveness study.

2. Can OBD Replace Tailpipe Testing?

During the OBD tailpipe effectiveness pilot, EPA found that while the pass/fail test results for the IM240 and OBD–I/M check frequently agreed, a significant portion of the vehicles tested failed the IM240 while passing the OBD–I/M check and vice versa. In cases where the OBD–I/M and IM240 test results disagreed, EPA had to determine which test was correct. In investigating these results, EPA focused on the vehicles which passed the OBD–I/M check while failing the IM240 in the lane. What EPA found when it retested these vehicles on the IM240 under quality-controlled, lab-grade conditions was that in most cases the lane IM240 failures were, in fact, *false* failures.[3] This suggests that in the I/M lane environment, the OBD–I/M check at least has the advantage of not falsely failing the same vehicles as the IM240—a consumer protection benefit, if not necessarily an environmental one.[4]

In other cases, the OBD–I/M check resulted in failing vehicles that both passed the IM240 and FTP. Though for a traditional tailpipe test these would constitute false failures, OBD is *not* a traditional tailpipe test. Traditional tailpipe tests sample exhaust emissions as they leave the tailpipe, whereas OBD monitors the status of individual emission control components. Unlike a traditional tailpipe test, OBD–I/M can identify vehicle emission control problems *before* the emissions themselves are out of control. OBD does this by identifying not only emission control components that are broken, but also those that are in need of maintenance prior to failure. Where traditional I/M tests can only measure the problem once the emission control system has failed, OBD (if heeded) can actually prevent the failure from happening in the first place (and thereby prevent a relatively inexpensive problem from leading to a significantly more costly repair bill).

Although EPA did find some vehicles during its pilot testing for which the malfunction that triggered the original DTC could not be reproduced, we do not believe Malfunction-Not-Reproduced (MNR) vehicles will constitute a significant problem in operating I/M programs. EPA believes that most of the MNR vehicles identified during the course of the pilot testing were the result of the recruitment procedures used in the pilot, and not an inherent problem with OBD–I/M itself. Under the pilot, vehicles were recruited as soon as the MIL was illuminated—not an optimum strategy for OBD, which is designed to detect intermittent problems like misfire, but one which was necessitated by the scarcity of vehicles with any MIL illumination at all. Under EPA's OBD requirements, a MIL lit for a random misfire (or other intermittent system fault) may be extinguished after three subsequent driving cycles of similar operation in which the system fault does not reoccur; after forty warm-up cycles without further fault detection, the DTC that caused the original MIL illumination may be erased. Under the pilot study,

[3] It should be noted that false failures are an inherent element in any ''short test'' approximation of the FTP. In the case of the IM240, false failures in the lane can be greatly reduced through the use of proper preconditioning, second-chance testing, and other quality control measures.

[4] False failures can have a negative environmental impact to the extent that they erode public confidence in and support of the program. EPA is also aware of anecdotal evidence that suggests the possibility that attempts to ''repair'' vehicles that are not broken can actually increase emissions on a vehicle that should have passed in the first place.

however, such vehicles were recruited before the OBD system had a chance to clear itself, and therefore fell into the MNR category. In its discussions with the repair industry concerning OBD-identified intermittent problems such as misfire and fuel trim problems, EPA has found that vehicles it identified as MNR during its pilot testing are frequently receiving relevant, preventative maintenance in the real world to ensure that the original malfunction does not reoccur and that the MIL, once cleared, stays off. This issue is discussed in more detail in the draft Technical Support Document (TSD) included in the docket for this proposal.

Based upon the above criteria, EPA concluded that OBD–I/M checks are superior to the IM240 because they: (1) Identify the same true failures as IM240; (2) do not identify the same false failures as IM240; and (3) identify vehicles in need of repair and/or maintenance prior to actual failure of the emission control system, thus preventing excess emissions in the first place. In turn, EPA concluded that there is little environmental value added in requiring states to perform both the IM240 *and* the OBD–I/M check on MY 1996+ vehicles. Furthermore, since the IM240 is considered the most accurate traditional tailpipe test available for I/M testing, these conclusions should also apply to other tailpipe tests, such as the idle test and the Acceleration Simulation Mode (ASM) test

3. Can OBD Replace Evaporative System Testing?

With regard to the OBD evaporative testing pilot, EPA focused on determining whether OBD–I/M checks accurately identified induced evaporative system failures and responded correctly when these failures were repaired. Another goal of the pilot was to quantify the emission reductions that resulted from correcting these evaporative system failures. The effectiveness of the OBD–I/M check was evaluated relative to the evaporative portion of the FTP. The induced failures included missing gas caps, disconnected purge lines, 0.040 inch leaks in the gas cap, vent line, and purge line, and 0.020 inch leaks in the gas cap. What EPA found was that the majority of OBD-equipped vehicles responded to the induced failures by lighting a MIL which then remained extinguished after repair. A relatively small percentage of vehicles (12% or 3 out of 25) did not illuminate the MIL after the failure was induced and only one vehicle in the study continued to register high evaporative emissions during SHED[5] testing after repairs that turned off the MIL. EPA considers these results impressive, compared to the existing purge and fill-neck pressure tests, which both suffer from a relatively high untestability rate due to accessability and material composition problems for various makes and models (roughly 30% for pre-OBD-equipped vehicles and over 85% for OBD-equipped vehicles). When it comes to the OBD–I/M check, however, OBD-equipped vehicles are 100% testable, by design (provided the Data Link Connector has not been tampered—a condition which itself constitutes grounds for failure). EPA therefore proposes to allow states currently doing the purge and fill-neck pressure tests to drop those tests on MY 1996 and newer OBD-equipped vehicles in favor of OBD–I/M checks on those same vehicles. EPA also recommends that programs add or continue existing gas cap tests in conjunction with OBD–I/M evaporative system testing, based upon the finding that a separate gas cap check can find leaking gas caps not designed to be found by OBD, and the known potential for such leaks to produce high evaporative emissions, as noted earlier.

4. Why is a Rule Change Needed To Permit Traditional I/M Tests To Be Replaced With OBD?

As currently written, the I/M rule requires states to add OBD testing to their I/M programs beginning no later than January 1, 2001. Although the rule does not explicitly state that I/M programs must conduct both their pre-existing I/M test(s) *and* the OBD check on OBD-equipped vehicles, the current rule's data analysis and reporting requirements include, among other things, the reporting of the number and percentage of vehicles by model year passing the OBD test while failing the I/M emission test(s), and vice versa. The existence of these requirements implies that both tests must be done under the I/M rule as currently written. Furthermore, the fact that EPA has not provided SIP credit modeling guidance with regard to OBD–I/M testing creates a disincentive to states that might otherwise prefer to drop the traditional I/M test(s) in favor of OBD–I/M testing on MY 1996+ OBD-equipped vehicles.

Today EPA is proposing to correct this presumption by making an affirmative determination that states are *not* required to conduct both the traditional I/M tests *and* the OBD check on MY 1996+ OBD-equipped vehicles. Given the fact that the Clean Air Act provides the states and EPA little discretion regarding the inclusion of OBD testing in I/M programs, the only flexibility EPA can offer states to prevent functionally redundant testing is to allow them to drop the traditional I/M tests on MY 1996+ OBD-equipped vehicles in favor of an OBD–I/M check. EPA does not have the authority to allow states to take the opposite course (*i.e.,* we cannot approve I/M programs that ignore the Act's OBD testing requirement in favor of the traditional I/M tests on MY 1996+ OBD-equipped vehicles). Nevertheless—and provided it does not interfere with a state's ability to meet the relevant performance standard—states may still exempt the newest vehicles from all testing for a set period of time. For example, a state *may* be able to delay implementation of the OBD–I/M check past January 1, 2002—*if* it can still meet the relevant performance standard after exempting MY 1996+ vehicles from all testing. The ability to exempt that many model years will vary on a state-by-state basis and is driven by the relative distribution of old versus new vehicles in the local fleet, as well as by which performance standard applies.

EPA believes that allowing states to exempt vehicles from the program and to otherwise deviate from specific elements of the relevant performance standard (provided the program achieves the same or better emission reductions as achieved by the performance standard) is consistent with the Clean Air Act, which draws a distinction between what is required of EPA in establishing the enhanced I/M performance standard, and what is minimally required of actual state programs. For example, the CAA requires that EPA's enhanced I/M performance standard include light-duty vehicles and light-duty trucks, but does not impose a similar, explicit requirement on actual, operating state programs. The CAA also requires that the enhanced I/M performance standard include antitampering inspections, but does not require the same of actual, operating state programs. Conversely, the CAA requires OBD–I/M testing in all I/M programs—whether basic or enhanced—but does not explicitly require EPA to include OBD–I/M testing in its performance standard.

It may be argued that since ''[c]omputerized emission analyzers'' and OBD inspections are listed as two separate elements required in enhanced I/M programs, that neither EPA nor the states have the discretion to exempt subject vehicles from one or the other

[5] The acronym SHED stands for Sealed Housing for Evaporative Determination. SHED testing is part of the evaporative portion of the FTP.

test. EPA disagrees with this argument. Maintaining that states cannot drop tailpipe emission testing from OBD-equipped vehicles based upon this separate-element argument leads to the illogical corollary that states also cannot exempt non-OBD-equipped vehicles from the OBD inspection. Rather, EPA believes that as long as a state includes emission testing on some segment of its subject vehicles, OBD–I/M testing on the OBD-equipped portion of the fleet, and meets or exceeds the emission reductions achieved by the relevant performance standard, then it shall be considered in compliance with the CAA requirements regarding minimum test type coverage. EPA believes the Act requires at a minimum that computerized emission analyzers be used where emission tests are conducted, and that OBD equipment be tested where cars are so equipped.

5. What Regulatory Change is EPA Proposing?

EPA proposes to insert clarifying text making the affirmative determination that states may drop traditional I/M tests on MY 1996+ OBD-equipped vehicles in favor of OBD–I/M checks in those sections of the I/M rule currently addressing OBD–I/M testing requirements, such as the performance standards, test procedure requirements, and data reporting requirements.

C. SIP Credit Modeling Amendments

1. Will States Lose Credit for Dropping the Traditional I/M Tests on MY 1996+ OBD-Equipped Vehicles?

The Clean Air Act distinguishes between the minimum program elements that were to be used by EPA in developing its I/M performance standards, and those program elements which had to be adopted by the state programs themselves to qualify as approvable I/M programs. For example, in developing its enhanced I/M performance standard, EPA was required to include both an antitampering inspection and an emission test on all MY 1968+ vehicles, including light-duty cars and light-duty trucks, using a centralized network and annual testing. States, on the other hand, have the option of designing biennial and/or decentralized I/M programs, are not required to include antitampering inspections, and can exempt as many vehicles as they want—provided they can still meet or exceed the applicable performance standard in terms of emission reductions. States also have flexibility with regard to the type of test performed and which model years are covered. In fact, to improve the cost effectiveness of their programs, states routinely exempt the newest vehicles in their fleets for two or more years, due to the very low statistical likelihood that such vehicles will fail.

As suggested above, states already have the flexibility to exempt MY 1996 and newer vehicles from traditional I/M tests, provided they can make a demonstration that they still meet the applicable performance standard, despite these exemptions. In practice, however, there has been little incentive for states to exempt these vehicles because doing so would result in a loss of the emission reductions they could model as part of their I/M SIPs, thus jeopardizing their ability to demonstrate that they meet the applicable performance standard. This shortfall would only grow for later evaluation years as a larger proportion of the fleet fell into the category of MY 1996 and newer vehicles. Performing the required OBD–I/M check on these vehicles would do nothing to offset the SIP credit shortfall because the MOBILE5 emission factor model used for projecting SIP credits does not currently include credits for OBM–I/M testing, and EPA has not provided guidance on how to address OBM–I/M testing in SIPs prior to release of MOBILE6. Therefore, even though EPA's pilot studies suggest that OBM–I/M testing does produce real-world emission reductions, without EPA's proposed action today, states could be compelled to continue functionally redundant testing, just so they can claim the credits needed to satisfy a paperwork modeling requirement.

The reason that the MOBILE5 model does not include OBM–I/M credits is because when the model was developed in the early 1990s, neither OBD certification nor OBM–I/M testing requirements had been established. As a result, there was no real-world data upon which to determine how much credit OBM–I/M testing should get, and whether this credit should replace or be added to the credit already assessed for the traditional I/M tests. Although the next iteration of the MOBILE model—MOBILE6—will include separate and explicit OBM–I/M credit, that version is still in development and is not currently available for states to use in preparing their SIPs. In the interim between MOBILE5 and MOBILE6, EPA proposes that states account for the replacement of traditional I/M tests with OBM–I/M testing by assuming that OBM–I/M testing does not get less credit than the test(s) that it is replacing. This assessment of ''no credit loss'' is based upon the pilot testing discussed earlier and addressed in detail in the TSD. In short, EPA has concluded that the OBM–I/M check is at least as effective as all other available I/M tests, with the exception of the gas cap pressure test—which is the only test EPA recommends states continue in conjunction with OBM–I/M testing for OBD-equipped vehicles. MOBILE6, when it is released, will reflect this guidance (*i.e.*, a modeling run that includes both traditional I/M testing and OBM–I/M testing on OBD-equipped vehicles will generate no more credit than if only OBM–I/M were assumed for those vehicles—with the exception of the gas-cap pressure test, for which additional credit will be available). Therefore, under the rule EPA is proposing today, states that opt to drop their traditional I/M tests for OBD-equipped vehicles in favor of OBM–I/M checks will not have to remodel their I/M credits prior to mandatory use of MOBILE6 for the next iteration of the states' other SIP modeling requirements that include I/M.

2. What Regulatory Change is EPA Proposing?

EPA proposes to revise the OBD sections of the I/M performance standards to indicate that for modeling purposes, the OBM–I/M testing segment of the performance standard overlaps but does not add to the credit already assessed for testing MY 1996+ vehicles. Furthermore, prior to release of MOBILE6, the credit from OBM–I/M testing will replace (as opposed to being added to) the credit already assessed for the testing of MY 1996+ vehicles in the states' I/M SIPs. Therefore traditional I/M tests can be dropped on MY 1996+ vehicles in favor of OBM–I/M testing on those same vehicles without affecting an area's ability to meet the applicable performance standard.

3. Is EPA Proposing To Give Different Areas Different Levels of Credit for Doing the Same Test?

Prior to release of MOBILE6, EPA is not proposing to proactively ''give'' states SIP credit for OBM–I/M testing; rather, we are proposing to ''not deduct'' credit from those areas that drop their existing, non-gas-cap-based I/M inspections on OBD-equipped vehicles in favor of OBM–I/M testing on that same subset of subject vehicles. EPA understands how this may seem like a distinction without a difference, the practical impact of which is that areas performing an idle test as their tailpipe test will only get idle-level credit for OBM–I/M, while those areas doing IM240 will get IM240-level credit for OBM–I/M. The fact is that both areas will get the exact same level of credit for

OBM–I/M—once MOBILE6 is released. Prior to that release, the only credit-assessment tool EPA has to offer states is MOBILE5—a model which simply was not designed to account for OBM–I/M. MOBILE5 and MOBILE6 are sufficiently different from one another that any surrogate method EPA would propose to ''trick'' MOBILE5 into modeling OBM–I/M credits is bound to produce erroneous results—results which, more likely than not, would produce temporary, ''paper'' credits that would disappear once areas were called upon to remodel their I/M programs using MOBILE6. EPA believes that maintaining the status quo with regard to I/M SIP credits while allowing states to drop their non-gas-cap-based, traditional I/M tests on OBD-equipped vehicles in favor of OBM–I/M for those same vehicles is the most responsible and conservative approach we can take during this interim period between models, given the known differences between the two models. Nevertheless, EPA welcomes comment on alternative approaches for assessing OBM–I/M credit during this interim period between mobile source emission factor models. Currently, MOBILE6 is scheduled for release by the end of calendar year 2000, and OBM–I/M will be included as a separate, modelable and fully-credited program element as part of that model.

D. OBD–I/M Failure Criteria Amendments

1. What Are the Current Failure Criteria?

On August 6, 1996, EPA identified the list of Diagnostic Trouble Codes (DTCs) that constitute the OBD–I/M failure criteria at 40 CFR 85.2207(d). These criteria were then echoed in 40 CFR 85.2223(b) which identifies the required DTCs that are to be listed as part of the OBD–I/M test report. Currently, the DTC-based failure criteria for OBD–I/M is limited to a subset of power train (or P-code) DTCs. If a vehicle is identified through an I/M program as having a Malfunction Indicator Light (MIL) commanded on for one or more of these P-codes, then Federal regulations require that the vehicle fail the inspection.

As part of the OBD–I/M implementation pilot study, EPA discovered that using only a subset of DTCs (as opposed to all DTCs that lead to the MIL being commanded on) undermines the potential of OBD to reduce and prevent excess emissions. The problem is that once the MIL is lit for a relatively minor problem the system is effectively eclipsed, should a more significant problem develop between I/M inspections. However, one of the significant advantages of OBD systems relative to traditional I/M is its ability to inform motorists of a problem in between inspections. Ideally, once the MIL has been commanded on, the motorist is aware that there is a problem with the vehicle that needs correction and will respond by getting the vehicle repaired well before such repairs are required by the I/M program. Repairing the vehicle in a timely manner can also help prevent minor problems from becoming major ones, thus saving the owner money in the long run. Under such a scenario, the I/M program is the backstop of last resort that enforces compliance with the OBD system. If the I/M program allows vehicles to complete the testing process without extinguishing the MIL, the OBD system will be effectively invalidated until the next inspection, and the public's responsiveness to OBD MILs will be eroded.

2. What Regulatory Change Does EPA Propose?

Given the above considerations, EPA is today proposing to simplify the DTC-based OBD–I/M failure criteria to include *any* DTC that results in the MIL being commanded on. Additionally, in the event that the OBD scan reveals DTCs that have been set but for which the MIL has not been commanded on, EPA recommends that the motorist be advised that a problem may be pending but we do not propose to require that the vehicle be failed at this time (unless other, non-DTC-based failure criteria have been met, such as a failed bulb check).

Given the above discussion concerning the MIL eclipsing effect and out-of-cycle OBD response, it is important to also note what EPA is *not* proposing with this document. Although voluntary compliance with OBD on the part of individual motorists prior to mandatory I/M testing represents the ideal, given OBD's potential, EPA realizes that the backstop of mandatory I/M is still needed to ensure compliance of these vehicles. Therefore, EPA is not proposing that OBD-equipped vehicles be exempt from participating in the periodic inspection process. The mandatory, periodic nature of I/M and the I/M infrastructure remain unchanged by today's proposal. Whether or not they are OBD-equipped, subject vehicles must still be presented for periodic inspection and must demonstrate compliance with all applicable I/M program requirements at an I/M test facility prior to registration in registration-based programs. OBD-equipped vehicles will just be subject to a different kind of periodic inspection once they show up at the lane (*i.e.*, the OBD scan) while non-OBD-equipped vehicles will continue to receive the more traditional tailpipe and/or evaporative system tests.

3. Will Increasing the Number of Possible OBD–I/M Failure Criteria Increase the Burden on Motorists?

While simplifying the failure criteria to all DTCs leading to MIL illumination will greatly simplify the state's administration of the OBD–I/M inspection, a logical biproduct of that simplification is that more motorists will be failed for OBD–I/M checks under the revised criteria than under the current regulations. Looking at six months' worth of OBD–I/M data from the Wisconsin I/M program, EPA found that less than 0.5% of the OBD-equipped vehicles tested had MILs lit for DTCs falling outside the current failure criteria. Furthermore, EPA believes that the net impact of today's proposal will be a significant *lessening* of the test burden on motorists, since they will be subjected to fewer tests overall under the proposal than would be the case otherwise (*i.e.*, a single, sixty second OBD–I/M test versus tailpipe, evaporative system, *and* OBD–I/M tests, which can take five minutes or longer to perform). Allowing states to drop traditional I/M tests in favor of OBD–I/M—EPA believes—will reduce the overall failure rate for OBD-equipped vehicles, relative to current requirements.

4. How Should Waivers Be Addressed Under OBD–I/M Testing Criteria?

Currently, both the Clean Air Act and the I/M rule provide a minimum expenditure value for state programs which allow the waiver of vehicles failing the I/M inspection from further repair obligation for one test cycle once a certain, minimum amount has been spent on relevant repairs. For basic I/M programs, these minimum expenditures are $75 for pre-1981 model year vehicles, and $200 for MY 1981 and newer vehicles; for enhanced I/M programs, the Act specifies a minimum expenditure for all vehicles of $450 adjusted to reflect the difference in the Consumer Price Index (CPI) between the previous year and 1989. Neither the rule nor the Act addresses the OBD–I/M check when it comes to qualifying for waivers. However, EPA is formally recommending that states not allow waivers for MY 1996 and newer OBD-equipped vehicles prior to extinguishing the MIL and correcting the cause of any DTCs for which the MIL was

illuminated. EPA also recommends that states consider providing repair subsidies or some other form of financial assistance to address hardship cases that would otherwise be addressed through the waiver process.

EPA makes this recommendation because of the fundamental difference between how OBD-equipped vehicles and non-OBD-equipped vehicles are diagnosed and repaired. EPA believes that the minimum expenditure waiver makes sense for traditional tailpipe and/or evaporative emission test-based repairs because such tests provide little concrete information concerning the specific cause of failure. Therefore, the waiver helps protect consumers from trial-and-error repairs that amount to little more than throwing parts at an insufficiently isolated problem. OBD, on the other hand, is specifically designed to help limit the opportunity for trial-and-error repairs by linking DTCs to specific components and subsystems. OBD does not just tell the repair technician that there is a problem, but also what kind of problem and approximately where in the overall system it is occurring. Furthermore, if an OBD-equipped vehicle is waived from further repair without extinguishing the MIL, the practical effect would be to render the OBD system invalid until the next test cycle due to the MIL eclipsing effect discussed earlier. EPA believes that allowing waivers under these circumstances sends the wrong message concerning the importance of responding to the MIL and defeats the whole purpose for which OBD was designed. We therefore recommend that states bar MY 1996 and newer OBD-equipped vehicles from participating in their waiver programs if such vehicles have a MIL commanded on at the time they apply for a waiver. EPA welcomes public comments and suggestions on alternative methods for addressing the OBD–I/M waiver issues discussed here.

E. OBD–I/M Rejection Criteria Amendments

1. What Are the Current Rejection Criteria?

Current Federal regulations for OBD–I/M testing require that I/M programs reject from further testing any MY 1996+ OBD-equipped vehicles that are found to have unset readiness flags. It is important to note that ''rejection'' is distinct from ''failure.'' In the context of OBD–I/M, rejection is triggered by a vehicle's readiness status while failure is related to the presence of DTCs that command the MIL to be lit. If DTCs are present and the MIL is commanded on, the vehicle is failed, the initial test process is considered complete and an official test report is generated. If, on the other hand, unset readiness flags are present, the vehicle is rejected and the test process is aborted.

The reason vehicles with unset readiness flags are rejected but not failed is because an unset readiness flag is not necessarily an indication of an emission problem. Rather, it is an indication that certain monitor(s) that are intended to determine whether or not there may be an emission problem have not been run to evaluate the system. In the case of rejection, the issue of whether or not the vehicle requires repairs is deferred until the readiness flag(s) have been set and the monitor(s) run.

The current I/M requirements are inadequate with regard to OBD readiness because there are many reasons why a readiness flag may not be set when an OBD-equipped vehicle arrives at the I/M test site—some of them wholly legitimate and beyond the control of the motorist. For one thing, not all OBD system monitors are run continuously. Some monitors are run every time a vehicle is driven, while others may only run after a certain combination of operating conditions has been met. Within Federal guidelines, manufacturers still have a fair degree of discretion in establishing the monitor-triggering protocols used and these tend to vary from manufacturer to manufacturer, as well as from model to model. As a result, it is possible that a vehicle may not have been operated under the conditions necessary to trigger one or more monitors before showing up for an OBD–I/M check. It is also possible that the monitors did run, but were then reset when the battery was disconnected during routine maintenance on the vehicle, or in an attempt to fraudulently extinguish the MIL and clear DTCs prior to OBD–I/M testing. Although disconnecting the battery will temporarily clear any DTCs that are present, these will eventually be triggered again, as the monitors in question are rerun. In fact, readiness codes were developed specifically to prevent vehicle owners from evading the test by disconnecting their batteries just prior to testing. In most cases the readiness flag can be set by running the vehicle under load for some period of time prior to resubmitting it for testing.

As part of its analysis of Wisconsin's OBD–I/M data, EPA found that a small percentage of the earliest OBD-equipped vehicles showed up at the I/M test lanes with unset readiness flags that could not be readily resolved by additional, normal vehicle operation. The percentage of vehicles experiencing this particular problem is small, and shrinking for newer model years. Excluding vehicles for which corrective measures are being taken by the manufacturers in the form of service campaigns and OBD computer reprogramming, EPA found that roughly 3% of MY 1996 vehicles had this readiness problem at the time of their initial OBD–I/M check and that this number dropped to below 1% for MY 1998 vehicles receiving their first OBD–I/M check. The majority of these unset readiness flags were for the catalyst and/or evaporative system, which are known to be difficult to set. Based upon these findings, EPA concluded that requiring rejection of vehicles for any unset readiness flag is unnecessarily restrictive, and that flexibility in this area is therefore warranted. Furthermore, EPA believes that the practical impact of allowing this flexibility is negligible, especially because an unset readiness flag is not the same thing as an emission problem and because of the likelihood that vehicles with unset readiness flags during one test cycle will be ''ready'' in time for subsequent test cycles. Lastly, the number of vehicles involved is dwarfed by other perennial I/M issues such as the non-compliance, drop-out and waiver rates, which are known to have a direct impact on the emission reduction effectiveness of a program.

2. What Regulatory Change Does EPA Propose?

Although EPA believes it is important in most cases to verify an OBD-equipped vehicle's readiness status, we do not believe that the motorist should be penalized for something beyond his/her control. Therefore, EPA is today proposing to allow states to complete the testing process on MY 1996–2000 vehicles with two or fewer unset readiness flags; for MY 2001 and newer vehicles, the testing process could still be complete provided there is no more than one unset readiness flag. This does not mean that these vehicles are exempt from the OBD–I/M check. The complete MIL check and scan must be run in all cases, and the vehicle still must be failed if the MIL is commanded on. The vehicle should continue to be rejected if it is MY 1996–2000 and has three or more unset readiness flags or is MY 2001 or newer and has two or more unset readiness flags. This proposal is based upon EPA's findings regarding readiness status from Wisconsin's OBD–I/M data discussed above and also reflects a FACA workgroup recommendation. It is intended to reduce the potential for customer

inconvenience during this start-up phase of the transition to OBD–I/M testing. We believe that the environmental impact of this exemption will be negligible, given the small number of vehicles involved, the likelihood that at least some of these readiness flags will have been set in time for subsequent OBD–I/M checks, and the fact that an unset readiness flag is not itself an indication of an emission problem. Furthermore, both EPA and the California Air Resources Board (CARB) are currently working with vehicle manufacturers to address this issue and further reduce the number of vehicles affected. Nevertheless, EPA solicits public comment on alternative approaches to addressing the readiness issue discussed here. In particular, EPA would like comment on whether vehicles with unset readiness flags should receive a traditional tailpipe and/or evaporative system test and whether different tests should be required in lieu of OBD–I/M testing depending upon which readiness flag has not been set.

F. Technical Amendment

The current I/M rule includes identical language regarding the inclusion of OBD–I/M testing in both the enhanced and basic I/M performance standards, with each standard assuming that, at a minimum, OBD–I/M testing is being performed on all OBD-equipped light-duty vehicles and light-duty trucks. While the Clean Air Act requires enhanced I/M performance standards to cover both light-duty vehicles and light-duty trucks, it does not require that level of coverage for the basic I/M performance standard. Currently, all other elements of the basic I/M performance standard (such as tailpipe testing coverage) apply only to light-duty vehicles, but not light-duty trucks. The inclusion of OBD–I/M testing on light-duty trucks in the basic I/M performance standard is the result of a typographical error. We are therefore proposing to correct this typographical error by deleting reference to light-duty trucks in § 51.352(c) of the I/M rule, which establishes the basic I/M performance standard coverage requirements for OBD–I/M testing.

V. Discussion of Major Issues

A. Emission Impact of the Proposed Amendments

Today's proposal clarifies existing flexibility currently available to states with regard to exempting specific model years from specific program requirements. It also provides an incentive for states to optimize the efficiency and cost effectiveness of their existing programs through the elimination of functionally redundant testing methods by allowing such tests to be dropped without any reduction in I/M SIP credit. Based upon the pilot data discussed in the TSD to this proposal, EPA has concluded that there is little inherent environmental benefit from requiring traditional I/M testing in addition to OBD–I/M checks on MY 1996+ OBD-equipped vehicles, with the exception of the gas cap pressure test. As a result, EPA believes that there is effectively no negative environmental impact from providing an incentive for eliminating these functionally redundant tests. EPA concludes that any marginal environmental benefit that might result from dual testing of OBD-equipped vehicles is far outweighed by the cost and inconvenience of dual testing, as well as by the potential environmental loss associated with ''fixing'' falsely failed vehicles.

B. Impact on Existing and Future I/M Programs

States with approved I/M SIPs will not have to remodel their I/M programs if they choose to exempt MY 1996+ OBD-equipped vehicles from traditional I/M tests in favor of OBD–I/M checks on those vehicles, provided no other programmatic changes are made. If, however, a state chooses to modify its program another way, then a revised I/M SIP and new modeling may be necessary.[6] Nevertheless, it is important to note that today's proposed amendments are aimed at lessening the overall burden on states while also improving program efficiency and cost effectiveness; the proposal does not increase the existing burden on states, provided states do not make other changes to their programs.

VI. Economic Costs and Benefits

Today's proposed revisions provide states with an incentive to increase the cost effectiveness and efficiency of their existing I/M programs. The proposal, when finalized, will lessen rather than increase the potential economic burden on states. Furthermore, states are under no obligation, legal or otherwise, to modify existing plans meeting the previously applicable requirements as a result of today's proposal.

VII. Public Participation

EPA desires full public participation in arriving at final decisions in this rulemaking action. EPA solicits comments on all aspects of this proposal from all parties. Wherever applicable, full supporting data and detailed analysis should also be submitted to allow EPA to make maximum use of the comments. All comments should be directed to the Air Docket, Docket No. A–2000–16.

VIII. Administrative Requirements

A. Administrative Designation

It has been determined that these proposed amendments to the I/M rule do not constitute a significant regulatory action under the terms of Executive Order 12866 and this action is therefore not subject to OMB review. Any impacts associated with these revisions do not constitute additional burdens when compared to the existing I/M requirements published in the **Federal Register** on November 5, 1992 (57 FR 52950) as amended. Nor do the proposed amendments create an annual effect on the economy of $100 million or more or otherwise adversely affect the economy or the environment. The proposal is not inconsistent with nor does it interfere with actions by other agencies. It does not alter budgetary impacts of entitlements or other programs, and it does not raise any new or unusual legal or policy issues.

B. Reporting and Recordkeeping Requirement

There are no additional information requirements in this proposed rule which require the approval of the Office of Management and Budget under the Paperwork Reduction Act 44 U.S.C. 3501 *et seq.*

C. Regulatory Flexibility Act

Pursuant to section 605(b) of the Regulatory Flexibility Act, 5 U.S.C. 605(b), the Administrator certifies that this proposal will not have a significant economic impact on a substantial number of small entities and, therefore, is not subject to the requirement of a Regulatory Impact Analysis. A small entity may include a small government entity or jurisdiction. This certification is based on the fact that the I/M areas impacted by the proposed rulemaking do not meet the definition of a small government jurisdiction, that is, ''governments of cities, counties, towns,

[6] For example, if a state which is currently employing a centralized, test-only network design for its I/M program decides to send MY 1996+ OBD-equipped vehicles to decentralized, test-and-repair stations for the OBD–I/M check instead of to centralized, test-only stations, this would constitute a fundamental change in program design. A change like this would require the submission of a revised I/M SIP including documented support for the associated emission credit claimed, or a good faith estimate of the effectiveness of the decentralized, test-and-repair portion of the program along with a commitment to substantiate that estimate using data from the operating program within 12 months of final, conditional approval of the SIP revision.

townships, villages, school districts, or special districts, with a population of less than 50,000.'' The basic and enhanced I/M requirements only apply to urbanized areas with population in excess of either 100,000 or 200,000 depending on location. Furthermore, the impact created by the proposed action does not increase the preexisting burden of the existing rules which this proposal seeks to amend.

D. Unfunded Mandates Act

Under section 202 of the Unfunded Mandates Reform Act of 1995 (''Unfunded Mandates Act''), signed into law on March 22, 1995, EPA must prepare a budgetary impact statement to accompany any proposed or final rule where the estimated costs to State, local, or tribal governments, or to the private sector, will be $100 million or more. Under section 205, EPA must select the most cost-effective and least burdensome alternative that achieves the objective of the rule and is consistent with statutory requirements. Section 203 requires EPA to establish a plan for informing and advising any small governments that may be significantly impacted by the rule. To the extent that the rules being proposed by this action would impose any mandate at all as defined in section 101 of the Unfunded Mandates Act upon the state, local, or tribal governments, or the private sector, as explained above, this proposed rule is not estimated to impose costs in excess of $100 million. Therefore, EPA has not prepared a statement with respect to budgetary impacts. As noted above, this rule offers opportunities to states that would enable them to lower economic burdens from those resulting from the currently existing I/M rule.

E. Executive Order 13132: Federalism

Executive Order 13132, entitled ''Federalism'' (64 FR 43255, August 10, 1999), requires EPA to develop an accountable process to ensure ''meaningful and timely input by State and local officials in the development of regulatory policies that have federalism implications.'' ''Policies that have federalism implications'' is defined in the Executive Order to include regulations that have ''substantial direct effects on the States, on the relationship between the national government and the States, or on the distribution of power and responsibilities among the various levels of government.''

Under section 6 of Executive Order 13132, EPA may not issue a regulation that has federalism implications, that imposes substantial direct compliance costs, and that is not required by statute, unless the Federal government provides the funds necessary to pay the direct compliance costs incurred by State and local governments, or EPA consults with State and local officials early in the process of developing the proposed regulation. EPA also may not issue a regulation that has federalism implications and that preempts State law, unless the Agency consults with State and local officials early in the process of developing the proposed regulation.

This proposed rule does not have federalism implications. It will not have substantial direct effects on the States, on the relationship between the national government and the States, or on the distribution of power and responsibilities among the various levels of government, as specified in Executive Order 13132. On the contrary, the intent of today's proposed rule is to provide states greater flexibility with regard to pre-existing regulatory and statutory requirements for vehicle inspection and maintenance (I/M) programs. Thus, the requirements of section 6 of the Executive Order do not apply to this proposal.

F. Executive Order 13084: Consultation and Coordination With Indian Tribal Governments

Under Executive Order 13084, EPA may not issue a regulation that is not required by statute, that significantly or uniquely affects the communities of Indian tribal governments, and that imposes substantial direct compliance costs on those communities, unless the Federal government provides the funds necessary to pay the direct compliance costs incurred by the tribal governments, or EPA consults with those governments. If EPA complies by consulting, Executive Order 13084 requires EPA to provide to the Office of Management and Budget, in a separately identified section of the preamble to the rule, a description of the extent of EPA's prior consultation with representatives of affected tribal governments, a summary of the nature of their concerns, and a statement supporting the need to issue the regulation. In addition, Executive Order 13084 requires EPA to develop an effective process permitting elected officials and other representatives of Indian tribal governments ''to provide meaningful and timely input in the development of regulatory policies on matters that significantly or uniquely affect their communities.'' Today's proposal does not significantly or uniquely affect the communities of Indian tribal governments. Today's proposal does not create a mandate on tribal governments or create any additional burden or requirements for tribal government. The proposal does not impose any enforceable duties on these entities. Accordingly, the requirements of section 3(b) of Executive Order 13084 do not apply to this proposal.

G. Executive Order 13045: Protection of Children From Environmental Health Risks and Safety Risks

Executive Order 13045 (62 FR 19885, April 23, 1997) applies to any rule that: (1) Is determined to be economically significant as defined under Executive Order 12866, and (2) concerns an environmental health or safety risk that EPA has reason to believe may have a disproportionate effect on children. If the regulatory action meets both criteria, the Agency must evaluate the environmental health or safety effects of the planned rule on children, and explain why the planned regulation is preferable to other potentially effective and reasonably feasible alternatives considered by the Agency. EPA interprets Executive Order 13045 as applying only to those regulatory actions that are based on health or safety risks, such that the analysis required under section 5–501 of the Order has the potential to influence the regulation. This proposal is not subject to Executive Order 13045 because it is not economically significant under Executive Order 12866 and because it is based on technology performance and not on health or safety risks.

H. National Technology Transfer and Advancement Act

Section 12(d) of the National Technology Transfer and Advancement Act of 1995 (NTTAA) directs all Federal agencies to use voluntary consensus standards instead of government-unique standards in their regulatory activities unless to do so would be inconsistent with applicable law or otherwise impractical. Voluntary consensus standards are technical standards (*e.g.,* material specifications, test methods, sampling and analytical procedures, business practices, etc.) that are developed or adopted by one or more voluntary consensus standards bodies. Examples of organizations generally regarded as voluntary consensus standards bodies include the American Society for Testing and Materials (ASTM), the National Fire Protection Association (NFPA), and the Society of Automotive Engineers (SAE). The NTTAA requires Federal agencies like EPA to provide Congress, through OMB, with explanations when an agency decides not to use available and

applicable voluntary consensus standards.

These proposed amendments do not involve technical standards. Therefore, EPA is not considering the use of any voluntary consensus standards.

List of Subjects

40 CFR Part 51

Environmental protection, Administrative practice and procedure, Air pollution control, Carbon monoxide, Intergovernmental relations, Lead, Nitrogen dioxide, Ozone, Particulate matter, Reporting and recordkeeping requirements, Sulfur oxides, Volatile organic compounds.

40 CFR Part 85

Environmental protection, Confidential business information, Imports, Labeling, Motor vehicle pollution, Reporting and recordkeeping requirements, Research, Warranties.

Dated: September 12, 2000.

Carol M. Browner,

Administrator.

For the reasons set out in the preamble, part 51 and 85 of chapter I, title 40 of the Code of Federal Regulations are proposed to be amended to read as follows:

PART 51—[AMENDED]

1. The authority citation for Part 51 continues to read as follows:

Authority: 23 U.S.C. 101; 42 U.S.C. 7401–7671q.

Subpart S—[Amended]

2. Section 51.351 is amended by revising paragraph (c) to read as follows:

§ 51.351 Enhanced I/M performance standard.

* * * * *

(c) *On-board diagnostics (OBD).* The performance standard shall include inspection of all 1996 and later light-duty vehicles and light-duty trucks equipped with certified on-board diagnostic systems, and repair of malfunctions or system deterioration identified by or affecting OBD systems as specified in § 51.357. For States using some version of MOBILE5 prior to mandated use of the MOBILE6 and subsequent versions of EPA's mobile source emission factor model, the OBD–I/M portion of the State's program as well as the applicable enhanced I/M performance standard may be assumed to be equal to the tests previously covering MY 1996 and newer vehicles in both the applicable performance standard and the I/M program contained in the State's I/M State Implementation Plan (SIP), with the intention that the inclusion of OBD–I/M testing in either case will neither increase nor decrease the credit currently established or claimed. This interim assumption shall apply even in the event that the State opts to discontinue its current I/M tests on MY 1996 and newer vehicles in favor of an OBD–I/M check on those same vehicles, with the exception of the gas-cap evaporative system test. If a State currently claiming the gas-cap test in its I/M SIP decides to discontinue that test on some segment of its subject fleet previously covered, then the State will need to revise its SIP and I/M modeling to quantify the resulting loss in credit, per established modeling policy for the gas-cap pressure test.

* * * * *

3. Section 51.352 is amended by revising paragraph (c) to read as follows:

§ 51.352 Basic I/M performance standard.

* * * * *

(c) *On-board diagnostics (OBD).* The performance standard shall include inspection of all 1996 and later light-duty vehicles equipped with certified on-board diagnostic systems, and repair of malfunctions or system deterioration identified by or affecting OBD systems as specified in § 51.357. For States using some version of MOBILE5 prior to mandated use of the MOBILE6 and subsequent versions of EPA's mobile source emission factor model, the OBD–I/M portion of the State's program as well as the applicable enhanced I/M performance standard may be assumed to be equal to the tests previously covering MY 1996 and newer vehicles in both the applicable performance standard and the I/M program contained in the State's I/M State Implementation Plan (SIP), with the intention that the inclusion of OBD–I/M testing in either case will neither increase nor decrease the credit currently established or claimed. This interim assumption shall apply even in the event that the State opts to discontinue its current I/M tests on MY 1996 and newer vehicles in favor of an OBD–I/M check on those same vehicles, with the exception of the gas-cap evaporative system test. If a State currently claiming the gas-cap test in its I/M SIP decides to discontinue that test on some segment of its subject fleet previously covered, then the State will need to revise its SIP and I/M modeling to quantify the resulting loss in credit, per established modeling policy for the gas-cap pressure test.

* * * * *

4. Section 51.356 is amended by adding a new paragraph (a)(6) to read as follows:

§ 51.356 Vehicle coverage.

* * * * *

(a) * * *

(6) States may also exempt MY 1996 and newer OBD-equipped vehicles that receive an OBD–I/M inspection from the tailpipe, purge, and fill-neck pressure tests (where applicable) without any loss of emission reduction credit.

* * * * *

5. Section 51.357 is amended by revising paragraphs (a)(5), (a)(12), (b)(1) introductory text, (b)(4) and (d) introductory text to read as follows:

§ 51.357 Test procedures and standards.

* * * * *

(a) * * *

(5) Vehicles shall be rejected from testing if the exhaust system is missing or leaking, or if the vehicle is in an unsafe condition for testing. Beginning January 1, 2002, MY 1996 and newer vehicles shall be rejected from testing if a scan of the OBD system reveals a ''not ready'' status for three or more monitors on MY 1996 through MY 2000 vehicles, inclusive, or for two or more monitors on MY 2001 and newer vehicles, as provided in 40 CFR 85.2222(c)(2). Once the cause for rejection has been corrected, the vehicle must return for testing to continue the testing process. Failure to return for testing after rejection shall be considered non-compliance with the program, unless the motorist can prove that the vehicle has been sold, scrapped, or is otherwise no longer in operation within the program area.

* * * * *

(12) On-board diagnostic checks. Beginning January 1, 2002, inspection of the on-board diagnostic (OBD) system on MY 1996 and newer light-duty vehicles and light-duty trucks shall be conducted according to the procedure described in 40 CFR 85.2222, at a minimum. This inspection may be used in lieu of tailpipe, purge, and fill-neck pressure testing. No additional emission reduction credit will be afforded programs that conduct tailpipe, purge, and fill-neck pressure testing in addition to OBD—I/M testing, with the exception of gas-cap-only evaporative system testing, for which additional credit may still be claimed.

* * * * *

(b) *Test standards*—(1) *Emissions standards.* HC, CO, and CO+CO2 (or CO2 alone) emission standards shall be applicable to all vehicles subject to the program with the exception of MY 1996 and newer OBD-equipped light-duty vehicles and light-duty trucks, which will be held to the requirements of 40 CFR 85.2207, at a minimum. Repairs

shall be required for failure of any standard regardless of the attainment status of the area. NO_X emission standards shall be applied to vehicles subject to a transient test in ozone nonattainment areas and in an ozone transport region, unless a waiver of NO_X controls is provided to the State under § 51.351(d) of this subpart.

* * * * *

(4) *On-board diagnostic test standards*. Vehicles shall fail the on-board diagnostic test if they fail to meet the requirements of 40 CFR 85.2207, at a minimum. Failure of the on-board diagnostic test need not result in failure of the vehicle inspection/maintenance test until January 1, 2002.

* * * * *

(d) *Applicability*. In general, section 203(a)(3)(A) of the Clean Air Act prohibits altering a vehicle's configuration such that it changes from a certified to a non-certified configuration. In the inspection process, vehicles that have been altered from their original certified configuration are to be tested in the same manner as other subject vehicles with the exception of MY 1996 and newer, OBD-equipped vehicles on which the data link connector has been altered in such a way as to make OBD system testing impossible. Such vehicles shall be rejected from further testing until they have been restored to a testable condition. Once the cause for rejection has been corrected, the vehicle must return for testing to continue the testing process. Failure to return for testing after rejection shall be considered non-compliance with the program, unless the motorist can prove that the vehicle has been sold, scrapped, or is otherwise no longer in operation within the program area.

* * * * *

6. Section 51.358 is amended by revising paragraph (a)(1) to read as follows:

§ 51.358 Test equipment.

* * * * *

(a) * * *

(1) Emission test equipment shall be capable of testing all subject vehicles and shall be updated from time to time to accommodate new technology vehicles as well as changes to the program. In the case of OBD-based testing, the equipment used to access the onboard computer shall be capable of testing all MY 1996 and newer, OBD-equipped light-duty vehicles and light-duty trucks.

* * * * *

7. Section 51.366 is amended by revising paragraphs (a)(2)(xi), (a)(2)(xii), (a)(2)(xv), (a)(2)(xvi), (a)(2)(xvii), (a)(2)(xviii), and by removing and reserving paragraphs (a)(2)(xiii) and (a)(2)(xiv) to read as follows:

§ 51.366 Data analysis and reporting.

* * * * *

(a) * * *

(2) * * *

(xi) Passing the on-board diagnostic check;

(xii) Failing the on-board diagnostic check;

(xiii) [Reserved]

(xiv) [Reserved]

(xv) Passing the on-board diagnostic check and failing the I/M gas cap evaporative system test (if applicable);

(xvi) Failing the on-board diagnostic check and passing the I/M gas cap evaporative system test (if applicable);

(xvii) Passing both the on-board diagnostic check and I/M gas cap evaporative system test (if applicable);

(xviii) Failing both the on-board diagnostic check and I/M gas cap evaporative system test (if applicable);

* * * * *

8. Section 51.373 is amended by revising paragraph (g) to read as follows:

§ 51.373 Implementation deadlines.

* * * * *

(g) On-Board Diagnostic checks shall be implemented in all basic, low enhanced and high enhanced areas as part of the I/M program by January 1, 2002.

PART 85—CONTROL OF AIR POLLUTION FROM MOBILE SOURCES

9. The authority citation for part 85 continues to read as follows:

Authority: 42 U.S.C. 7401–7671q.

Subpart W—[Amended]

10. Section 85.2207 is amended by removing and reserving paragraph (d) and adding a new paragraph (f) to read as follows:

§ 85.2207 On-board diagnostics test standards.

* * * * *

(d) [Reserved]

* * * * *

(f) A vehicle shall fail the on-board diagnostics test if the malfunction indicator light is commanded to be illuminated for one or more OBD diagnostic trouble codes (DTCs), as defined by SAE J2012. The procedure shall be done in accordance with SAE J2012 Diagnostic Trouble Code Definitions, (MAR92). This incorporation by reference was approved by the Director of the Federal Register in accordance with 5 U.S.C. 552(a) and 1 CFR part 51. Copies of SAE J2012 may be obtained from the Society of Automotive Engineers, Inc., 400 Commonwealth Drive, Warrendale, PA 15096–0001. Copies may be inspected at the EPA Docket No. A–94–21 at EPA's Air Docket, (LE–131) Room 1500 M, 1st Floor, Waterside Mall, 401 M Street SW, Washington, DC, or at the Office of the Federal Register, 800 North Capitol Street, NW., suite 700, Washington, DC.

11. Section 85.2222 is amended by revising paragraphs (c), (d)(1) and (d)(2) and by adding new paragraph (d)(4) to read as follows:

§ 85.2222 On-board diagnostic test procedures.

* * * * *

(c) The test system shall send a Mode $01, PID $01 request in accordance with SAE J1979 to determine the evaluation status of the vehicle's on-board diagnostic system. The test system shall determine what monitors are supported by the on-board diagnostic system, and the readiness evaluation for applicable monitors in accordance with SAE J1979. The procedure shall be done in accordance with SAE J1979 ''E/E Diagnostic Test Modes,'' (DEC91). This incorporation by reference was approved by the Director of the Federal Register in accordance with 5 U.S.C. 552(a) and 1 CFR part 51. Copies of SAE J1979 may be obtained from the Society of Automotive Engineers, Inc., 400 Commonwealth Drive, Warrendale, PA 15096–0001. Copies may be inspected at the EPA Docket No. A–94–21 at EPA's Air Docket (LE–131), Room 1500 M, 1st Floor, Waterside Mall, 401 M Street SW, Washington, DC, or at the Office of the Federal Register, 800 North Capitol Street, NW., suite 700, Washington, DC.

(1) Beginning January 1, 2002, if the readiness evaluation indicates that any on-board tests are not complete the customer shall be instructed to return after the vehicle has been run under conditions that allow completion of all applicable on-board tests. If the readiness evaluation again indicates that any on-board test is not complete the vehicle shall be failed.

(2) An exception to paragraph (c)(1) of this section is allowed for MY 1996 to MY 2000 vehicles, inclusive, with two or fewer unset readiness monitors, and for MY 2001 and newer vehicles with no more than one unset readiness monitor. Vehicles from those model years which would otherwise pass the OBD inspection, but for the unset readiness code(s) in question may be issued a passing certificate without being required to operate the vehicle in such a way as to activate those particular monitors. Vehicles from those

model years with unset readiness codes which also have diagnostic trouble codes (DTCs) stored resulting in a lit malfunction indicator light (MIL) should be failed, though setting the unset readiness flags in question shall not be a prerequisite for passing the retest.

(d) * * *

(1) If the malfunction indicator status bit indicates that the malfunction indicator light (MIL) has been commanded to be illuminated the test system shall send a Mode $03 request to determine the stored diagnostic trouble codes (DTCs). The system shall repeat this cycle until the number of codes reported equals the number expected based on the Mode 1 response. All DTCs resulting in MIL illumination shall be recorded in the vehicle test record and the vehicle shall fail the on-board diagnostic inspection.

(2) If the malfunction indicator light bit is not commanded to be illuminated the vehicle shall pass the on-board diagnostic inspection, even if DTCs are present.

* * * * *

(4) If the malfunction indicator light (MIL) does not illuminate at all when the vehicle is in the key-on/engine-off (KOEO) condition, the vehicle shall fail the on-board diagnostic inspection, even if no DTCs are present and the MIL has not been commanded on.

12. Section 85.2223 is amended by revising paragraph (a) and removing and reserving paragraph (b) to read as follows:

§ 85.2223 On-board diagnostic test report.

(a) Motorists whose vehicles fail the on-board diagnostic test described in § 85.2222 shall be provided with the on-board diagnostic test results, including the codes retrieved, the name of the component or system associated with each fault code, the status of the MIL illumination command, and the customer alert statement as stated in paragraph (c) of this section.

(b) [Reserved]

* * * * *

§ 85.2231 {Removed]

13. Section 85.2231 is amended by removing and reserving paragraph (d).

[FR Doc. 00–24048 Filed 9–19–00; 8:45 am]

BILLING CODE 6560–50–P

ENVIRONMENTAL PROTECTION AGENCY

40 CFR Parts 52

[TN–233–1–20021b; FRL–6872–3]

Approval and Promulgation of the Implementation Plan for the Shelby County, Tennessee Lead Nonattainment Area

AGENCY: Environmental Protection Agency (EPA).

ACTION: Proposed rule.

SUMMARY: The Environmental Protection Agency (EPA) proposes to approve the lead state implementation plan (SIP) for the Shelby County, Tennessee lead nonattainment area. The Memphis and Shelby County Health Department through the Tennessee Department of Environment and Conservation submitted the lead SIP on March 17, 2000, pursuant to sections 110(a)(2) and 172(c) of the Clean Air Act (CAA). In the final rules section of this **Federal Register**, the EPA is approving Tennessee's SIP revision as a direct final rule without a prior proposal because the Agency views this as a noncontroversial revision amendment and anticipates no adverse comments. A detailed rationale for the approval is set forth in the direct final rule. If no adverse comments are received in response to the direct final rule, no further activity is contemplated in relation to this proposed rule. If EPA receives adverse comments, the direct final rule will be withdrawn and all public comments received will be addressed in a subsequent final rule based on this proposed rule. The EPA will not institute a second comment period on this document. Any parties interested in commenting on this document should do so at this time.

DATES: To be considered, comments must be received by October 20, 2000.

ADDRESSES: Written comments should be addressed to Kimberly Bingham, at the EPA Regional Office listed below. The interested persons wanting to examine these documents should make an appointment with the appropriate office at least 24 hours before the visiting day. Copies of the documents relative to this action are available for public inspection during normal business hours at the following locations. U.S. Environmental Protection Agency, Region 4, Sam Nunn Atlanta Federal Center, Air, Pesticides, and Toxics Management Division, Air Planning Branch, 61 Forsyth Street, Atlanta, 30303–3104. Tennessee Air Pollution Control Board, 9th Floor, L & C Annex, 401 Church Street, Nashville, Tennessee 37243–1531.

FOR FURTHER INFORMATION CONTACT: Kimberly Bingham of the EPA Region 4, Air Planning Branch at the above address. Ms. Bingham can be reached at (404) 562–9038 and Bingham.Kimberly@epa.gov.

SUPPLEMENTARY INFORMATION: For additional information, see the direct final rule which is published in the rule's section of this **Federal Register**.

Dated: September 5, 2000.

Mike V. Peyton,

Acting Regional Administrator, Region 4.

[FR Doc. 00–24043 Filed 9–19–00; 8:45 am]

BILLING CODE 6560–50–P

ENVIRONMENTAL PROTECTION AGENCY

40 CFR Part 52

[AL–051–200026(b); FRL–6872–5]

Approval and Promulgation of Implementation Plans: Revisions to the Alabama Department of Environmental Management (ADEM) Administrative Code for the Air Pollution Control Program

AGENCY: Environmental Protection Agency (EPA).

ACTION: Proposed rule.

SUMMARY: The EPA is proposing approval of revisions to the Alabama Department of Environmental Management's (ADEM) Administrative Code submitted on January 10, 2000, by the State of Alabama. The revisions comply with the regulations set forth in the Clean Air Act (CAA). Included in this document are revisions to Chapter 335–3–14—Air Permits. ADEM is revising this rule to delete outdated accommodative state implementation plan (SIP) rules. In the Final Rules section of this **Federal Register**, the EPA is approving the State's SIP revision as a direct final rule without prior proposal because the Agency views this as a noncontroversial submittal and anticipates no adverse comments. A detailed rationale for the approval is set forth in the direct final rule. If no adverse comments are received in response to this action, no further activity is contemplated. If EPA receives adverse comments, the direct final rule will be withdrawn and all public comments received will be addressed in a subsequent final rule based on this proposed rule. The EPA will not institute a second comment period on this document. Any parties interested in

commenting on this document should do so at this time.

DATES: Written comments must be received on or before October 20, 2000.

ADDRESSES: Written comments should be addressed to Kimberly Bingham, at the EPA Regional Office listed below. The interested persons wanting to examine these documents should make an appointment with the appropriate office at least 24 hours before the visiting day. Copies of the documents relative to this action are available for public inspection during normal business hours at the following locations.

Air and Radiation Docket and Information Center (Air Docket 6102), U.S. Environmental Protection Agency, 401 M Street, SW., Washington, DC 20460.

U.S. Environmental Protection Agency, Region 4, Atlanta Federal Center, Air, Pesticides, and Toxics Management Division, 61 Forsyth Street, Atlanta, Georgia 30303–3104.

FOR FURTHER INFORMATION CONTACT: Kimberly Bingham of the EPA Region 4, Air Planning Branch at (404) 562–9038 and at the above address.

SUPPLEMENTARY INFORMATION: For additional information see the direct final rule which is published in the Final Rules section of this **Federal Register**.

Dated: September 5, 2000.

Mike V. Peyton,

Acting Regional Administrator, Region 4.

[FR Doc. 00–24041 Filed 9–19–00; 8:45 am]

BILLING CODE 6560–50–P

FEDERAL COMMUNICATIONS COMMISSION

47 CFR Part 73

[DA 00–2069; MM Docket No. 00–166; RM–9951]

Radio Broadcasting Services; Wickenburg, AZ

AGENCY: Federal Communications Commission.

ACTION: Proposed rule.

SUMMARY: This document requests comments on a petition for rule making filed on behalf of Wickenburg Broadcasting, requesting the allotment of Channel 242C3 to Wickenburg, Arizona, as that community's third local FM transmission service. Coordinates used for this proposal are 34–01–01 NL and 112–41–46 WL. Additionally, Wickenburg, Arizona, is located within 320 kilometers (199 miles) of the Mexico border, and therefore, the Commission must obtain concurrence of the Mexican government to this proposal.

DATES: Comments must be filed on or before October 30, 2000, and reply comments on or before November 14, 2000.

ADDRESSES: Secretary, Federal Communications Commission, Washington, DC 20554. In addition to filing comments with the FCC, interested parties should serve the petitioner's counsel, as follows: A. Wray Fitch III, Esq., Gammon & Grange, P.C., 8280 Greensboro Drive, 7th Floor, McLean, VA 22101–3807.

FOR FURTHER INFORMATION CONTACT: Nancy Joyner, Mass Media Bureau, (202) 418–2180.

SUPPLEMENTARY INFORMATION: This is a synopsis of the Commission's Notice of Proposed Rule Making, MM Docket No. 00–166, adopted August 30, 2000, and released September 8, 2000. The full text of this Commission decision is available for inspection and copying during normal business hours in the FCC's Reference Information Center (Room CY–A257), 445 Twelfth Street, SW., Washington, DC. The complete text of this decision may also be purchased from the Commission's copy contractor, International Transcription Service, Inc., 1231 20th Street, NW., Washington, DC 20036, (202) 857–3800.

Provisions of the Regulatory Flexibility Act of 1980 do not apply to this proceeding.

Members of the public should note that from the time a Notice of Proposed Rule Making is issued until the matter is no longer subject to Commission consideration or court review, all *ex parte* contacts are prohibited in Commission proceedings, such as this one, which involve channel allotments. See 47 CFR 1.1204(b) for rules governing permissible *ex parte* contacts.

For information regarding proper filing procedures for comments, See 47 CFR 1.415 and 1.420.

Federal Commuications Commission.

John A. Karousos,

Chief, Allocations Branch, Policy and Rules Division, Mass Media Bureau.

[FR Doc. 00–24073 Filed 9–19–00; 8:45 am]

BILLING CODE 6712–01–P

FEDERAL COMMUNICATIONS COMMISSION

47 CFR Part 73

[DA No. 00–2058; MM Docket No. 00–27; RM–9820, RM–9875 & RM–9876]

Radio Broadcasting Services; Valley Mills, Gorman, Hico and Walnut Springs, TX

AGENCY: Federal Communications Commission.

ACTION: Proposed rule; dismissal.

SUMMARY: Valley Mills Radio Broadcasting Company proposed the allotment of Channel 237C2 at Valley Mills, Texas. *See* 65 FR 11537, March 3, 2000. Counterproposals were filed by Valley Mills Radio Broadcasting Company requesting the allotment of Channel 237C2 at Hico, TX and by Gorman Community Broadcasting Company requesting the allotment of Channel 238C3 at Gorman, TX and Channel 237A at Walnut Springs, TX. On June 14, 2000, a Joint Motion to Dismiss was filed by Valley Mills Radio Broadcasting Company and Gorman Community Broadcasting Company. Therefore, the petition and counterproposals have been dismissed, as requested, with no action taken with regard to allotments at Valley Mills, Hico, Gorman and Walnut Springs, TX.

ADDRESSES: Federal Communications Commission, Washington, D.C. 20554.

FOR FURTHER INFORMATION CONTACT: Kathleen Scheuerle, Mass Media Bureau, (202) 418–2180.

SUPPLEMENTARY INFORMATION: This is a summary of the Commission's Report and Order, MM Docket No. 00–27, adopted August 30, 2000, and released September 8, 2000. The full text of this Commission decision is available for inspection and copying during normal business hours in the Commission's Reference Center, 445 12th Street, SW., Washington, DC.

The complete text of this decision may also be purchased from the Commission's copy contractors, International Transcription Services, Inc., 1231 20th Street, NW., Washington, DC. 20036, (202) 857–3800, facsimile (202) 857–3805.

Federal Communications Commission.

John A. Karousos,

Chief, Allocations Branch, Policy and Rules Division, Mass Media Bureau.

[FR Doc. 00–24072 Filed 9–19–00; 8:45 am]

BILLING CODE 6712–01–P

FEDERAL COMMUNICATIONS COMMISSION

47 CFR Part 73

[DA 00–2067; MM Docket No. 00–94; RM–9883]

Radio Broadcasting Services; Almont, ND

AGENCY: Federal Communications Commission.

ACTION: Proposed rule, dismissal.

SUMMARY: The Commission dismisses the request of Morton County Radio to allot Channel 294A to Almont, ND, as its first local aural service. *See* 65 FR 3639, June 8, 2000. Neither the petitioner nor any other party filed comments expressing an intention to file for the channel, if allotted.

ADDRESSES: Federal Communications Commission, Washington, D.C. 20554.

FOR FURTHER INFORMATION CONTACT: Leslie K. Shapiro, Mass Media Bureau, (202) 418–2180.

SUPPLEMENTARY INFORMATION: This is a synopsis of the Commission's Report and Order, MM Docket No. 00–94, adopted August 30, 2000, and released September 8, 2000. The full text of this Commission decision is available for inspection and copying during normal business hours in the FCC Reference Center (Room 239), 445 12th Street, SW., Washington, DC. The complete text of this decision may also be purchased from the Commission's copy contractor, International Transcription Services, Inc., (202) 857–3800, 1231 20th Street, NW, Washington, DC 20036.

Federal Communications Commission.

John A. Karousos,

Chief, Allocations Branch, Policy and Rules Division, Mass Media Bureau.

[FR Doc. 00–24070 Filed 9–19–00; 8:45 am]

BILLING CODE 6712–01–P

FEDERAL COMMUNICATIONS COMMISSION

47 CFR Part 73

[DA 00–2068, MM Docket No. 00–165, RM–9941]

Radio Broadcasting Services; Royston and Arcade, GA

AGENCY: Federal Communications Commission.

ACTION: Proposed rule.

SUMMARY: The Commission requests comments on a petition filed by Southern Broadcasting of Athens, Inc., licensee of Station WPUP(FM), Channel 279C3, Royston, GA, seeking the reallotment of Channel 279C3 from Royston to Arcade, GA, as the community's first local aural service, and modification of Station WPUP(FM)'s license accordingly. Petitioner is requested to provide further information concerning the status of Arcade as a community for allotment purposes and the areas and populations which will gain and lose service if the reallotment is granted. Channel 279C3 can be allotted to Arcade in compliance with the Commission's minimum distance separation requirements with a site restriction of 21 kilometers (13 miles) north, at coordinates 34–15–09 NL; 83–28–28 WL, to avoid a short-spacing to Stations WVEE, Channel 277C, Atlanta, GA, WVKX, Channel 279A, Irwinton, GA, and WDDK, Channel 280A, Greensboro, GA, as well as to accommodate petitioner's desired transmitter site.

DATES: Comments must be filed on or before October 30, 2000, and reply comments on or before November 14, 2000.

ADDRESSES: Federal Communications Commission, 445 12th Street, S.W., Room TW–A325, Washington, DC 20554. In addition to filing comments with the FCC, interested parties should serve the petitioner, or its counsel or consultant, as follows: Gary S. Smithwick, Smithwick & Belendiuk, P.C., 1990 M Street, NW., Suite 510, Washington, DC 20036 (Counsel to petitioner).

FOR FURTHER INFORMATION CONTACT: Leslie K. Shapiro, Mass Media Bureau, (202) 418–2180.

SUPPLEMENTARY INFORMATION: This is a synopsis of the Commission's Notice of Proposed Rule Making, MM Docket No. 00–165, adopted August 30, 2000, and released September 8, 2000. The full text of this Commission decision is available for inspection and copying during normal business hours in the FCC Reference Center, 445 12th Street, SW., Washington, DC. The complete text of this decision may also be purchased from the Commission's copy contractor, International Transcription Services, Inc., (202) 857–3800, 1231 20th Street, NW, Washington, DC 20036.

Provisions of the Regulatory Flexibility Act of 1980 do not apply to this proceeding.

Members of the public should note that from the time a Notice of Proposed Rule Making is issued until the matter is no longer subject to Commission consideration or court review, all *ex parte* contacts are prohibited in Commission proceedings, such as this one, which involve channel allotments. See 47 CFR 1.1204(b) for rules governing permissible *ex parte* contacts.

For information regarding proper filing procedures for comments, see 47 CFR 1.415 and 1.420.

Federal Communications Commission.

John A. Karousos,

Chief, Allocations Branch, Policy and Rules Division, Mass Media Bureau.

[FR Doc. 00–24068 Filed 9–19–00; 8:45 am]

BILLING CODE 6712–01–P

DEPARTMENT OF DEFENSE

48 CFR Part 213

[DFARS Case 2000–D019]

Defense Federal Acquisition Regulation Supplement; Overseas Use of the Purchase Card in Contingency, Humanitarian, or Peacekeeping Operations

AGENCY: Department of Defense (DoD).

ACTION: Proposed rule with request for comments.

SUMMARY: The Director of Defense Procurement is proposing to amend the Defense Federal Acquisition Regulation Supplement (DFARS) to permit contracting officers supporting a contingency, humanitarian, or peacekeeping operation to use the Governmentwide commercial purchase card on a stand-alone basis for purchases valued at or below the simplified acquisition threshold. Use of the purchase card streamlines purchasing and payment procedures and, therefore, increases operational efficiency.

DATES: Comments on the proposed rule should be submitted in writing to the address shown below on or before November 20, 2000, to be considered in the formation of the final rule.

ADDRESSES: Interested parties should submit written comments on the proposed rule to: Defense Acquisition Regulations Council, Attn: Ms. Susan L. Schneider, OUSD (AT&L) DP (DAR), IMD 3D139, 3062 Defense Pentagon, Washington, DC 20301–3062. Telefax (703) 602–0350.

E-mail comments submitted via the Internet should be addressed to: dfars@acq.osd.mil.

Please cite DFARS Case 2000–D019 in all correspondence related to this proposed rule. E-mail correspondence should cite DFARS Case 2000–D019 in the subject line.

FOR FURTHER INFORMATION CONTACT: Ms. Susan Schneider, (703) 602–0326.

SUPPLEMENTARY INFORMATION:

A. Background

This rule proposes to amend the policy at DFARS 213.301 to permit contracting officers supporting a contingency operation, as defined in 10 U.S.C. 101(a)(13), or a humanitarian or peacekeeping operation, as defined in 10 U.S.C. 2302(8), to use the Governmentwide commercial purchase card on a stand-alone basis for purchases valued at or below the simplified acquisition threshold. In accordance with FAR 2.101, the simplified acquisition threshold for contingency, humanitarian, or peacekeeping operations is $200,000.

Use of the purchase card at the $200,000 threshold would be subject to the existing conditions at DFARS 213.301 and the following additional conditions: (1) The supplies or services must be immediately available; and (2) Only one delivery and one payment will be made. These additional conditions are similar to those placed on contingency contracting officers using the Standard Form 44, Purchase Order-Invoice-Voucher, in accordance with FAR 13.306 and DFARS 213.306.

This rule was not subject to Office of Management and Budget review under Executive Order 12866, dated September 30, 1993.

B. Regulatory Flexibility Act

The proposed rule is not expected to have a significant economic impact on a substantial number of small entities within the meaning of the Regulatory Flexibility Act, 5 U.S.C. 601, *et seq.,* because the rule applies only to purchases that are made outside the United States for use outside the United States in support of contingency, humanitarian, or peacekeeping operations. Therefore, DoD has not performed an initial regulatory flexibility analysis. DoD invites comments from small businesses and other interested parties. DoD also will consider comments from small entities concerning the affected DFARS subpart in accordance with 5 U.S.C. 610. Such comments should be submitted separately and should cite DFARS Case 2000–D019.

C. Paperwork Reduction Act

The Paperwork Reduction Act does not apply because the rule does not impose any information collection requirements that require the approval of the Office of Management and Budget under 44 U.S.C. 3501, *et seq.*

List of Subjects in 48 CFR Part 213

Government procurement.

Michele P. Peterson,

Executive Editor, Defense Acquisition Regulations Council.

Therefore, DoD proposes to amend 48 CFR Part 213 as follows:

1. The authority citation for 48 CFR Part 213 continues to read as follows:

Authority: 41 U.S.C. 421 and 48 CFR Chapter 1.

PART 213—SIMPLIFIED ACQUISITION PROCEDURES

2. Section 213.301 is amended by adding paragraph (3) to read as follows:

213.301 Governmentwide commercial purchase card.

* * * * *

(3) A contracting officer supporting a contingency operation as defined in 10 U.S.C. 101(a)(13) or a humanitarian or peacekeeping operation as defined in 10 U.S.C. 2302(8) also may use the Governmentwide commercial purchase card to make a purchase that exceeds the micro-purchase threshold but does not exceed the simplified acquisition threshold, if—

(i) The supplies or services being purchased are immediately available;

(ii) One delivery and one payment will be made; and

(iii) The requirements of paragraphs (2)(i) and (ii) of this section are met.

[FR Doc. 00–24140 Filed 9–19–00; 8:45 am]

BILLING CODE 5000–04–M

NATIONAL AERONAUTICS AND SPACE ADMINISTRATION

48 CFR Part 1811

Priorities and Allocations

AGENCY: National Aeronautics and Space Administration (NASA)

ACTION: Proposed Rule.

SUMMARY: This is a proposed rule amending the NASA FAR Supplement (NFS) to specify that use of a priority rating under the Defense Priorities and Allocations System (DPAS) regulation is not required unless the acquisition is in one of the Schedule L categories of the DPAS.

DATES: Comments should be submitted on or before November 20, 2000.

ADDRESSES: Interested parties should submit written comments to James H. Dolvin, NASA Headquarters, Office of Procurement, Contract Management Division (Code HK), Washington, DC 20546. Comments may also be submitted by e-mail to: *jdolvin1@mail.hq.nasa.gov.*

FOR FURTHER INFORMATION CONTACT: James H. Dolvin, Code HK, (202) 358–1279, *jdolvin1@mail.hq.nasa.gov.*

SUPPLEMENTARY INFORMATION:

A. Background

The Defense Priorities and Allocations System is a Department of Commerce program which supports certain authorized national defense programs by requiring that contractors give priority treatment to contracts which have priority ratings. NFS Subpart 1811.6 currently requires that most NASA contractual actions receive a priority rating under the Defense Priorities and Allocations System (DPAS) regulation (15 CFR 700). The present NFS requirement is being changed to provide that NASA acquisition actions will be rated only if they are in one of the categories in DPAS Schedule L.

B. Regulatory Flexibility Act

NASA certifies that this proposed rule will not have a significant economic impact on a substantial number of small business entities within the meaning of the Regulatory Flexibility Act (5 USC 601, *et seq.*), because it does not impose any new requirements on offerors or contractors.

C. Paperwork Reduction Act

The Paperwork Reduction Act does not apply because the changes to the NFS do not impose any recordkeeping or information collection requirements, or collection of information from offerors, contractors, or members of the public that require the approval of the Office of Management and Budget under 44 USC 3501, *et seq.*

List of Subjects in 48 CFR Part 1811

Government procurement.

Tom Luedtke,

Associate Administrator for Procurement.

Accordingly, 48 CFR Part 1811 is proposed to be amended as follows:

1. The authority citation for 48 CFR part 1811 continues to read as follows:

Authority: 42 U.S.C. 2473(c)(1).

PART 1811—DESCRIBING AGENCY NEEDS

2. Subpart 1811.6 is revised to read as follows:

Subpart 1811.6 —Priorities and Allocations

1811.603 Procedures.

(e)(i) Priority ratings are assigned on individual contracts and purchase

orders by the contracting officer. The following priority ratings may be used on NASA contracts and purchase orders for equipment and services that support authorized programs (see Schedule L of the DPAS):

A1—Aircraft

A2—Missiles

A3—Ships

A5—Weapons

A6—Ammunition

A7—Electronic and Communications Equipment

B1—Military Building Supplies

B8—Production Equipment (For Contractor's Account)

B9—Production Equipment (Government-Owned)

C2—Construction

C3—Maintenance, Repair, and Operating Supplies for Facilities

C9—Miscellaneous/Other

(ii) Priority ratings will not be issued for the following:

(A) Items ordered or requisitioned from the GSA Federal Supply Service.

(B) Items for plant improvement, expansion, or construction, unless they will be physically incorporated into a construction project covered by a rated order, or unless NASA has obtained specific priority rating authority.

(C) Production or construction equipment or items to be used for the manufacture of production equipment, unless NASA has obtained specific priority rating authority.

(D) Items falling under the jurisdiction of agencies other than NASA's Delegate Agency. These are: petroleum, gas, solid fuel, electric power, and all other forms of energy; food; civil transportation and the movement of persons and property by all modes; minerals; water; housing facilities; health facilities; radio-isotopes, stable isotopes, source material and special nuclear material produced in Government-owned plants or facilities operated by or for the Department of Energy; communication services; copper raw materials; crushed stone; gravel; sand; scrap; slag; central steam heat; and waste paper.

(iii) NASA rated orders may only be assigned a DO rating, unless NASA has obtained a DX rating from the Department of Defense.

(g) Installation requests for assistance shall be directed to the Headquarters Office of Procurement (Code HK).

[FR Doc. 00–24178 Filed 9–19–00; 8:45 am]

BILLING CODE 7510–01–P

DEPARTMENT OF COMMERCE

National Oceanic and Atmospheric Administration

50 CFR Part 679

[Docket No. 000905252-0252-01; I.D.080700D]

RIN 0648-AN98

Fisheries of the Exclusive Economic Zone Off Alaska; Prohibited Species Donation Program

AGENCY: National Marine Fisheries Service (NMFS), National Oceanic and Atmospheric Administration (NOAA), Commerce.

ACTION: Proposed rule; request for comments.

SUMMARY: NMFS is proposing to permanently extend the temporary regulations that establish and govern the voluntary Pacific halibut donation program. Under this program, Pacific halibut that is taken incidentally in groundfish trawl fisheries off Alaska may be donated for consumption by economically disadvantaged individuals rather than discarded, as normally required. This action is necessary to promote the goals and objectives of the Fishery Management Plan for the Groundfish Fishery of the Bering Sea and Aleutian Islands Area and the Fishery Management Plan for Groundfish of the Gulf of Alaska (FMPs). The intended effect of this action is to reduce the amount of regulatory discards in the groundfish fisheries.

DATES: Comments must be received by October 5, 2000.

ADDRESSES: Send comments to Susan Salveson, Assistant Administrator for Sustainable Fisheries, NMFS, Alaska Region, P.O. Box 21668, Juneau, AK 99802, Attn: Lori Gravel, or delivered to Federal Building, Fourth Floor, 709 West 9th Street, Juneau, AK, and marked Attn: Lori Gravel. Comments will not be accepted if submitted via e-mail or the Internet. Copies of the draft Environmental Assessment/Regulatory Impact Review prepared for this action may be obtained from the same address or by calling the Alaska Region, NMFS, at 907-586-7228. Send comments on collection-of-information requirements to NMFS, Alaska Region at the address given here and to the Office of Information and Regulatory Affairs (OIRA), Office of Management and Budget (OMB), Washington, DC 20503 (Attn: NOAA Desk Officer). Send comment on any ambiguity or unnecessary complexity arising from the language used in this proposed rule to the Regional Administrator, Alaska Region, P.O. Box 21668, Juneau, AK 99802.

FOR FURTHER INFORMATION CONTACT: Susan Salveson, 907-586-7228.

SUPPLEMENTARY INFORMATION: NMFS manages the domestic groundfish fisheries in the exclusive economic zone off Alaska pursuant to the Alaska groundfish FMPs. The North Pacific Fishery Management Council (Council) prepared the FMPs, and NMFS approved them, in accordance with the Magnuson-Stevens Fishery Conservation and Management Act (Magnuson-Stevens Act). Regulations governing the Alaska groundfish fisheries appear at 50 CFR parts 600 and 679. Fishing for Pacific halibut in waters in and off Alaska is governed by the Convention between the United States and Canada for the Preservation of the Halibut Fishery of the North Pacific Ocean and Bering Sea and by regulations adopted by the International Pacific Halibut Commission (IPHC) and approved by the Secretary of State of the United States pursuant to section 4 of the Northern Pacific Halibut Act (16 U.S.C. 773-773k). Regulations of the IPHC are published as annual management measures in the **Federal Register** each year pursuant to regulations at 50 CFR 300.62.

The Prohibited Species Donation (PSD) program regulations at § 679.26 include provisions for the voluntary donation of halibut taken as bycatch in the groundfish trawl fisheries that are delivered dead by trawl catcher vessels to shoreside processors for distribution by tax-exempt organizations for consumption by economically disadvantaged individuals.

The groundfish trawl vessels are not allocated any directed fishery quota for halibut and must discard all halibut. Many trawl vessels discard halibut at sea; some portion of which is alive. However, many trawl vessels, for practical reasons, cannot sort their catch at sea and catch remains unsorted until it is offloaded at a shoreside processor. Because of this process of shoreside sorting, halibut are 'landed' dead. This action would not affect the halibut resource because the groundfish fisheries are restricted by halibut bycatch mortality limits that require closure of specified fisheries when a limit has been reached. In 1998 and 1999, 21,196 lb (9,635 kg) and 6,190 lb (2,814 kg) of eviscerated halibut were donated through the PSD program, respectively. NMFS estimates that the halibut donation program provided 65,000 meals to economically

disadvantaged individuals in the western Washington Puget Sound area in 1998. No violations of the halibut donation regulations have been reported or observed.

The halibut PSD program will expire on December 31, 2000. The Council and the IPHC supported the sunset provision to allow management agencies to assess the effectiveness of the halibut donation program, relative to the program's objectives, before the Council took action to extend the program beyond the year 2000.

At its June 2000 meeting, the Council requested NMFS to initiate rulemaking to permanently extend the halibut donation program. The Council also endorsed a recommendation by IPHC staff to review the program every 3 years and assess whether regulatory changes should be pursued to respond to any management or enforcement concerns that may arise in the future. This proposed rule would extend permanently the existing halibut provisions of the PSD program. This action would make no other changes to the existing PSD program. NMFS, the Council, and the IPHC would conduct periodic reviews of the program and the regulations could be revised in the future, if necessary, to respond to new concerns.

Classification

At this time, NMFS has not determined that this proposed regulatory amendment is consistent with the national standards of the Magnuson-Stevens Act and other applicable laws. NMFS, in making that determination, will take into account the views and comments received during the comment period.

The Chief Counsel for Regulation of the Department of Commerce certified to the Chief Counsel for Advocacy of the Small Business Administration that this proposed regulatory amendment, if adopted, would not have a significant economic impact on a substantial number of small entities as follows:

This proposed regulatory amendment would make permanent the halibut provisions of the Prohibited Species Donation (PSD) program and is identical to the existing program, which is scheduled to end on December 31, 2000, and is in accordance with the Fishery Management Plan for the Groundfish Fishery of the Bering Sea/Aleutian Islands Area and the Fishery Management Plan for Groundfish of the Gulf of Alaska. The proposed regulatory amendment would allow NMFS to continue to authorize distribution of halibut incidentally caught in the Alaska groundfish trawl fisheries and delivered dead to shoreside processors. Halibut voluntarily donated under the PSD program would be distributed to economically disadvantaged individuals through a network of non-profit organizations. Because the overall U.S. groundfish quotas and fishing patterns would remain the same, no change is anticipated in overall revenues that would accrue to small businesses in the groundfish fishery. Furthermore, because halibut bycatch is unavoidable in the trawl fisheries, is fully accounted for in quota setting in the directed halibut fishery, and is otherwise discarded, the PSD program imposes no adverse impacts on halibut fishing or on the resource.

The authorized distributor, Northwest Food Strategies, is now believed to provide the single most important source of protein for hunger relief in the United States, delivering nearly 14 million seafood meals to hungry Americans since 1933. This non-profit organization is dominant in its field of seafood distribution to hunger-relief agencies (1.8 million pounds in 1999), and as such, is not considered a small entity. Other non-profit agencies that would be expected to apply in the future are likely to be small entities. However, a limited number of these applications is anticipated because donated distributors attempt to equate the number of distributors to available vessel participants and donated product.

The participating processors, Unisea, Inc., and Alyeska Seafoods, Inc., are not considered small entities because they are owned by corporations that employ greater than 500 people, in all of their holdings, combined. Other processors that are likely to be authorized to process trawl-caught halibut for this program (predominantly in Dutch Harbor, Alaska) also are not considered small entities. This program would be totally voluntary. NMFS anticipates that no processor that qualifies as a small entity would elect to participate in the voluntary program if the costs of doing so imposed a significant adverse economic burden.

The ability to donate trawl-caught halibut may indeed reduce costs to small entities (catcher vessels) because this program would eliminate the need for the catcher vessel to return halibut bycatch that is sorted shoreside to Federal waters for disposal.

This proposed regulatory amendment has been determined to be not significant for purposes of Executive Order 12866.

Pursuant to section 7 of the Endangered Species Act (ESA), NMFS has completed a consultation on the effects of the groundfish fishery on listed species. Reasonable and prudent alternatives have been implemented to mitigate the adverse impacts of the pollock fisheries on the western population of Steller sea lions and its critical habitat (65 FR 3892, January 25, 2000, and extended at 65 FR 36795, June 12, 2000). NMFS also completed consultations on the effects of the 2000 Bering Sea and Aleutian Islands (BSAI) groundfish fisheries on listed species, and on critical habitat. These consultations were completed December 23, 1999, and concluded that the proposed fisheries were not likely to cause jeopardy or adverse modification to designated critical habitat. However, in an order dated January 25, 2000, the District Court for the Western District of Washington concluded that NMFS must consult pursuant to section 7 of the ESA on the fishery management plans for the groundfish fisheries of the BSAI and GOA. *Greenpeace* v. *NMFS*, Civ. No. 98-49ZZ (W.D. Wash.). Prior to the issuance of the Court's order, NMFS had begun consultation to evaluate the cumulative effects of the BSAI and Gulf of Alaska (GOA) groundfish fisheries over a multi-year period on candidate and listed species and critical habitat. NMFS is currently reviewing this ongoing consultation for compliance with the Court's order and will continue consultation. NMFS has determined that this proposed rule, if implemented, would not result in an irreversible or irretrievable commitment of resources that would have the effect of foreclosing the formulation or implementation of any reasonable or prudent alternative measures that may be necessary.

The area in which this proposed action is planned has been identified as essential fish habitat (EFH) for species managed by the Council. No adverse impacts to EFH are anticipated from this action and, therefore, no consultation is required.

Notwithstanding any other provision of the law, no person is required to respond to, nor shall any person be subject to penalty for failure to comply with a collection of information, subject to the requirements of the Paperwork Reduction Act (PRA), unless that collection of information displays a currently valid OMB control number.

This proposed rule contains collection-of-information requirements subject to the PRA. The collection of this information has been approved by the Office of Management and Budget under OMB control number 0648-0316. Public reporting burden (per individual) for these collections of information, including both salmon and halibut donations, is estimated to average as follows: 40 hours every 3 years per application and 40 hours per year for completing a list of vessels and processors for a NMFS authorized distributor; 9 hours per year (0.1 hrs for 90 processing days) for vessel and processor labeling and product tracking documentation; and 15 minutes per year for vessels/processor documentation. The estimated response times listed include the time for reviewing instructions, searching existing data sources, gathering and maintaining the data needed, and completing and reviewing the collection of information.

Send comments regarding this burden estimate, or any other aspect of this data collection, including suggestions for reducing the burden, to NMFS and OMB (see **ADDRESSES**).

The President has directed Federal agencies to use plain language when communicating with the public, through regulation or otherwise. Therefore, NMFS seeks public comment on any ambiguity or unnecessary complexity arising from the language used in this proposed rule (see **ADDRESSES**).

List of Subjects in 50 CFR Part 679

Alaska, Fisheries, Recordkeeping and reporting requirements.

Dated: September 14, 2000.

Penelope D. Dalton,

Assistant Administrator for Fisheries, National Marine Fisheries Service.

For the reasons set forth in the preamble, 50 CFR part 679 is proposed to be amended as follows:

PART 679—FISHERIES OF THE EXCLUSIVE ECONOMIC ZONE OFF ALASKA

1. The authority citation for 50 CFR part 679 continues to read as follows:

Authority: 16 U.S.C. 773 *et seq.*, 1801 *et seq.*, and 3631 *et seq.*

2. In § 679.26, the section heading, paragraphs (a)(2) and (b)(3)(iv) are revised to read as follows:

§ 679.26 Prohibited Species Donation Program (PSD).

(a) * * *

(1) * * *

(2) Halibut delivered by catcher vessels using trawl gear to shoreside processors.

(b) * * *

(3) * * *

(iv) Effective period. A PSD permit issued for salmon or halibut remains in effect for a 3-year period after the selection notice is published in the Federal Register unless suspended or revoked. A PSD permit issued to an authorized distributor may be renewed following the application procedures in this section.

* * * * *

[FR Doc. 00–24184 Filed 9–19–00; 8:45 am]

BILLING CODE 3510–22–S

Notices

Federal Register

Vol. 65, No. 183

Wednesday, September 20, 2000

This section of the FEDERAL REGISTER contains documents other than rules or proposed rules that are applicable to the public. Notices of hearings and investigations, committee meetings, agency decisions and rulings, delegations of authority, filing of petitions and applications and agency statements of organization and functions are examples of documents appearing in this section.

DEPARTMENT OF AGRICULTURE

Animal and Plant Health Inspection Service

[Docket No. 00–084–1]

Availability of a Draft Environmental Assessment for Field Testing Salmonella Typhimurium Vaccine, Live Culture

AGENCY: Animal and Plant Health Inspection Service, USDA.

ACTION: Notice.

SUMMARY: We are advising the public that the Animal and Plant Health Inspection Service has prepared a draft environmental assessment concerning authorization to ship for the purpose of field testing, and then to field test, an unlicensed live *Salmonella typhimurium* vaccine for use in poultry. The environmental assessment, which is based on a risk analysis prepared to assess the risks associated with the field testing of this vaccine, examines the potential effects that field testing this veterinary vaccine could have on the quality of the human environment. Based on the risk analysis, we have reached a preliminary determination that field testing this veterinary vaccine will not have a significant impact on the quality of the human environment, and that an environmental impact statement need not be prepared. We intend to authorize shipment of this vaccine for field testing following the close of the comment period for this notice unless new substantial issues bearing on the effects of this action are brought to our attention. We also intend to issue a veterinary biological product license for this vaccine, provided the field test data support the conclusions of the environmental assessment and the issuance of a finding of no significant impact and the product meets all other requirements for licensure.

DATES: We invite you to comment on this docket. We will consider all comments that we receive by October 20, 2000.

ADDRESSES: Please send your comments and three copies to: Docket No. 00–084–1, Regulatory Analysis and Development, PPD, APHIS, Suite 3C03, 4700 River Road, Unit 118, Riverdale, MD 20737–1238.

Please state that your comment refers to Docket No. 00–084–1.

Copies of the draft environmental assessment may be obtained by contacting the person listed under **FOR FURTHER INFORMATION CONTACT**. Please refer to the docket number, date, and complete title of this notice when requesting copies. A copy of the draft environmental assessment (as well as the risk analysis with confidential business information removed) and any comments that we receive on this docket are available for public inspection in our reading room. The reading room is located in room 1141 of the South Building, 14th Street and Independence Avenue SW., Washington, DC. Normal reading room hours are 8 a.m. to 4:30 p.m., Monday through Friday, except holidays. To be sure someone is there to help you, please call (202) 690–2817 before coming.

APHIS documents published in the **Federal Register**, and related information, including the names of organizations and individuals who have commented on APHIS dockets, are available on the Internet at http://www.aphis.usda.gov/ppd/rad/webrepor.html.

FOR FURTHER INFORMATION CONTACT: Dr. Albert P. Morgan, Chief Staff Officer, Operational Support Section, Center for Veterinary Biologics, Licensing and Policy Development, VS, APHIS, USDA, 4700 River Road Unit 148, Riverdale, MD 20737–1231; (301) 734–8245.

SUPPLEMENTARY INFORMATION: Under the Virus-Serum-Toxin Act (21 U.S.C. 151 *et seq.*), a veterinary biological product must be shown to be pure, safe, potent, and efficacious before a veterinary biological product license may be issued. A field test is generally necessary to satisfy prelicensing requirements for veterinary biological products. Prior to conducting a field test on an unlicensed product, an applicant must obtain approval from the Animal and Plant Health Inspection Service (APHIS), as well as obtain APHIS' authorization to ship the product for field testing.

To determine whether to authorize shipment and grant approval for the field testing of the unlicensed product referenced in this notice, APHIS conducted a risk analysis to assess the potential effects of this product on the safety of animals, public health, and the environment. Based on the risk analysis, APHIS has prepared a draft environmental assessment (EA) concerning the field testing of the following unlicensed veterinary biological product:

Requester: Fort Dodge Laboratories, Inc.

Product: Salmonella Typhimurium Vaccine, Live Culture.

Field test locations: Georgia, South Carolina, and Maryland.

The above-mentioned vaccine is a gene-deleted vaccine for use in chickens as an aid in the reduction of colonization of the internal organs by *Salmonella typhimurium*. Genetic alterations limit the ability of the vaccine bacteria to replicate in vertebrate tissues.

The draft EA has been prepared in accordance with: (1) The National Environmental Policy Act of 1969 (NEPA), as amended (42 U.S.C. 4321 *et seq.*), (2) regulations of the Council on Environmental Quality for implementing the procedural provision of NEPA (40 CFR parts 1500–1508), (3) USDA regulations implementing NEPA (7 CFR part 1b), and (4) APHIS' NEPA Implementing Procedures (7 CFR part 372).

Unless substantial environmental issues are raised in response to this notice, APHIS intends to issue a final EA and finding of no significant impact (FONSI) and authorize shipment of the above product for the initiation of field tests following the close of the comment period for this notice.

Because the issues raised by field testing and by issuance of a license are identical, APHIS has concluded that the EA that is generated for field testing would also be applicable to the proposed licensing action. Provided that the field test data support the conclusions of the original EA and the issuance of a FONSI, APHIS does not intend to issue a separate EA and FONSI to support the issuance of the product license, and would determine that an environmental impact statement need

not be prepared. APHIS intends to issue a veterinary biological product license for this vaccine following completion of the field test provided no adverse impacts on the human environment are identified and provided the product meets all other requirements for licensure.

Authority: 21 U.S.C. 151–159.

Done in Washington, DC, this 14th day of September 2000.

Bobby R. Acord,

Acting Administrator, Animal and Plant Health Inspection, Service.

[FR Doc. 00–24137 Filed 9–19–00; 8:45 am]

BILLING CODE 3410–34–P

DEPARTMENT OF AGRICULTURE

Farm Service Agency

Request for Revision and Extension of an Approved Information Collection

AGENCY: Farm Service Agency, USDA.

ACTION: Notice and request for comments.

SUMMARY: In accordance with the Paperwork Reduction Act of 1995, this notice announces the intent of the Farm Service Agency (FSA) to request an extension of the Office of Management and Budget's (OMB) approval of a previously approved information collection which supports FSA, Farm Loan Programs (FLP) loan making and servicing applications. This renewal does not involve any revisions to the program regulations.

DATES: Comments on this notice must be received on or before November 20, 2000 to be assured of consideration.

FOR FURTHER INFORMATION CONTACT: Gail Wargo, Agriculture Management Specialist, USDA, FSA, Farm Loan Programs, Program Development and Economic Enhancement Division, 1400 Independence Avenue, SW., STOP 0521, Washington, DC 20250–0521; telephone (202) 720–3647; electronic mail: gail__@wdc.usda.gov.

SUPPLEMENTARY INFORMATION:

Title: Management Advice to Individual Borrowers and Applicants

OMB Control Number: 0560–0154

Type of Request: Revision and Extension of an Approved Information Collection

Abstract: The information collected under OMB Control Number 0560–0154 is necessary to provide proper farm assessments, credit counseling and supervision to direct loan borrowers in accordance with the requirements of 7 CFR part 1924 subpart B as authorized by the Consolidated Farm and Rural Development Act. Specifically, the Agency uses the information to protect the Government's financial interests by ensuring that the farming operations of direct loan applicants and borrowers are properly assessed for short and long-term financial feasibility. The information is needed by the Agency to assure that the recipients of direct loans receive appropriate credit counseling and supervision to ensure the greatest chance for financial success.

Estimate of Burden: Public reporting burden for this collection of information is estimated to average 2.26 hours per response.

Respondents: Individuals or households, businesses or other for profit and farms.

Estimated Number of Respondents: 77,210.

Estimated Number of Responses per Respondent: 1.03.

Estimated Total Annual Burden on Respondents: 180,441.

Comments are sought on these requirements including: (a) Whether the collection of information is necessary for the proper performance of the functions of the agency, including whether the information will have practical utility; (b) the accuracy of the agency's estimate of burden including the validity of the methodology and assumptions used; (c) ways to enhance the quality, utility, and clarity of the information to be collected; or (d) ways to minimize the burden of the collection of information on those who are to respond, including the use of appropriate automated, electronic, mechanical or other technological collections techniques or other form of information technology.

These comments should be sent to the Desk Officer for Agriculture, Office of Information and Regulatory Affairs, Office of Management and Budget, Washington, D.C. 20503 and to Gail Wargo, USDA, FSA, Farm Loan Programs, Program Development and Economic Enhancement Division, 1400 Independence Avenue, SW., STOP 0521, Washington, DC 20250–0521. Copies of the information collection may be obtained from Gail Wargo at the above address. Comments regarding paperwork burden will be summarized and included in the request for OMB approval of the information collection. All comments will also become a matter of public record.

Signed at Washington, D.C., on September 13, 2000.

Keith Kelly,

Administrator, Farm Service Agency.

[FR Doc. 00–24131 Filed 9–19–00; 8:45 am]

BILLING CODE 3410–05–P

DEPARTMENT OF AGRICULTURE

Forest Service

Woronkofski Environmental Impact Statement

AGENCY: Forest Service, USDA.

ACTION: Notice of intent to prepare an Environmental Impact Statement.

SUMMARY: The Department of Agriculture, Forest Service, will prepare an Environmental Impact Statement (EIS) to provide timber for the Tongass timber sale program. The proposed action is to harvest an estimated 5–15 million board feet (mmbf) of timber on an estimated 300–800 acres in one or more timber sales. A range of alternatives responsive to significant issues will be developed and will include a no-action alternative. A Record of Decision will be prepared to disclose if and how the Forest Service has decided to provide harvest units, roads, and associated timber harvesting facilities. The proposed timber harvest is located within Tongass Forest Plan Value Comparison Unit 461 on Woronkofski Island, Alaska, Wrangell Ranger District of the Tongass National Forest.

DATES: Comments concerning the scope of this project should be received by October 27, 2000. The Draft EIS is projected to be filed with the Environmental Protection Agency (EPA) in April 2001. The Final EIS is anticipated by October 2001.

ADDRESSES: Please send written comments to Wrangell Ranger District; Attn: Woronkofski EIS; P.O. Box 51, Wrangell, AK 99929.

FOR FURTHER INFORMATION CONTACT: Randy Hojem, Acting District Ranger, or Dee Galla, IDT Leader, Wrangell Ranger District, Tongass National Forest, P.O. Box 51, Wrangell, AK 99929 telephone (907) 874–2323.

SUPPLEMENTARY INFORMATION: Public participation will be an integral component of the study process and will be especially important at several points during the analysis. The first is during the scoping process. The Forest Service will be seeking information, comments, and assistance from Federal, State, local agencies, individuals and organizations that may be interested in, or affected by, the proposed activities. The scoping process will include: (1) Identification of potential issues; (2) identification of issues to be analyzed in depth; and, (3) elimination of insignificant issues or those which have been covered by a previous environmental review. Written scoping comments are being solicited through a

scoping package that will be sent to the project mailing list and to those that request the package. For the Forest Service to best use the scoping input, comments should be received by October 27, 2000.

Based on results of scoping and the resource capabilities within the project area, alternatives including a ''no action'' alternative will be developed for the Draft Environmental Impact Statement (Draft EIS).

The comment period on the draft environmental impact statement will be a minimum of 45 days from the date the Environmental Protection Agency publishes the notice of availability in the **Federal Register**.

The Forest Service believes it is important to give reviewers notice of several court rulings related to public participation in the environmental review process. First, reviewers of draft environmental impact statements must structure their participation in the environmental review of the proposal so that it is meaningful and alerts an agency to the reviewer's position and contentions. *Vermont Yankee Nuclear Power Corp.* v. *NRDC,* 435 U.S. 519, 553, (1978). Environmental objections that could have been raised at the draft environmental impact statement stage may be waived or dismissed by the courts. *City of Angoon* v. *Hodel,* 803 F.2nd 1016, 1022 (9th Cir. 1986) and *Wisconsin Heritages, Inc.* v. *Harris*, 490 F. Supp. 1334, 1338 (E.D. Wis. 1980). Because of these court rulings, it is very important that those interested in this proposed action participate by the close of the comment period so that substantive comments and objections are made available to the Forest Service at a time when it can meaningfully consider them and respond to them in the final environmental impact statement.

To assist the Forest Service in identifying and considering issues and concerns of the proposed action, comments during scoping and comments on the draft environmental impact statement should be as specific as possible. It is also helpful if comments refer to specific pages or chapters of the draft statement. Comments may also address the adequacy of the draft environmental impact statement or the merits of the alternatives formulated and discussed in the statement. Reviewers may wish to refer to the Council on Environmental Quality Regulations for implementing the procedural provisions of the National Environmental Policy Act at 40 CFR 1503.3 in addressing these points. Comments received in response to this solicitation, including names and addreses of those who comment, will be considered part of the public record on this proposed action and will be available for public inspection. Comments submitted anonymously will be accepted and considered; however, those who submit anonymous comments will not have standing to appeal the subsequent decision under 36 CFR Parts 215 or 217. Additionally, pursuant to 7 CFR 1.27(d), any person may request the agency to withhold a submission from the public record by showing how the Freedom of Information Act (FOIA) permits such confidentiality. Requesters should be aware that, under FOIA, confidentiality may be granted in only very limited circumstances, such as to protect trade secrets. The Forest Service will inform the requester of the agency's decision regarding the request for confidentiality, and where the request is denied, the agency will return the submission and notify the requester that the comments may be resubmitted with or without name and address within 7 days.

Permits: Permits required for implementation include the following:

1. U.S. Army Corp of Engineers

—Approval of discharge of dredged or fill material into the waters of the United States under Section 404 of the Clean Water Act;

—Approval of the construction of structures or work in navigable waters of the United States under Section 10 of the Rivers and Harbors Act of 1899;

2. Environmental Protection Agency

—National Pollutant Discharge Elimination System (402) Permit;

—Review Spill Prevention Control and Countermeasure Plan;

3. State of Alaska, Department of Natural Resources

—Tideland Permit and Lease or Easement;

4. State of Alaska, Department of Environmental Conservation

—Solid Waste Disposal Permit;

—Certification of Compliance with Alaska Water Quality Standards (401 Certification).

Responsible Official

Thomas Puchlerz, Forest Supervisor, Tongass National Forest, Federal Building, Ketchikan, Alaska 99901, is the responsible official. The responsible official will consider the comments, response, disclosure of environmental consequences, and applicable laws, regulations, and policies in making the decision and stating the rationale in the Record of Decision.

Dated: September 5, 2000.

Thomas Puchlerz,

Forest Supervisor.

[FR Doc. 00–24079 Filed 9–19–00; 8:45 am]

BILLING CODE 3410–11–M

DEPARTMENT OF COMMERCE

Submission For OMB Review; Comment Request

DOC has submitted to the Office of Management and Budget (OMB) for clearance the following proposal for collection of information under the provisions of the Paperwork Reduction Act (44 U.S.C. chapter 35).

Agency: U.S. Census Bureau.

Title: 2000 Panel of the Survey of Income and Program Participation, Wave 4 Topical Module.

Form Number(s): SIPP 2045(L), Director's Letter, SIPP/CAPI Automated Instrument.

Agency Approval Number: 0607–0865.

Type of Request: Revision of a currently approved collection.

Burden: 37,650.

Number of Respondents: 26,250.

Avg. Hours Per Response: 30 minutes per person.

Needs and Uses: The Census Bureau conducts the Survey of Income and Program Participation (SIPP) to collect information concerning the distribution of income received directly as money or indirectly as in-kind benefits. SIPP data are used by economic policymakers, the Congress, state and local governments, and Federal agencies that administer social welfare and transfer payment programs such as the Department of Health and Human Services, the Department of Housing and Urban Development, and the Department of Agriculture.

The SIPP is a longitudinal survey, in that households in the panel are interviewed at 4-month intervals or waves over the life of the panel. The duration of a panel is typically 3 to 4 years. The length of the 2000 SIPP Panel is subject to the approval of budget initiatives but is currently scheduled for one year and will include three waves of interviews.

The survey is molded around a central core of labor force and income questions, health insurance questions, and questions concerning government program participation that remain fixed throughout the life of the panel. The core questions are asked in Wave 1 and are updated during subsequent interviews. The core is supplemented with additional questions or topical

modules designed to answer specific needs.

This request is for clearance of the topical modules for Wave 4. The core questionnaire and topical modules for Waves 1, 2, and 3 were cleared previously. The topical modules for Wave 4 are: Annual Income and Retirement Accounts, Taxes, Work Schedule, Child Care, and Children's Well-Being. Wave 4 interviews will be conducted from February 2001 through May 2001. Additionally, a reinterview for quality control purposes will be conducted with a small subsample of respondents throughout the life of the panel.

Affected Public: Individuals and households.

Frequency: Every 4 months.

Respondent's Obligation: Voluntary.

Legal Authority: Title 13, United States Code, Section 182.

OMB Desk Officer: Susan Schechter, (202) 395–5103.

Copies of the above information collection proposal can be obtained by calling or writing Madeleine Clayton, DOC Forms Clearance Officer, (202) 482–3272, Department of Commerce, room 6086, 14th and Constitution Avenue, NW, Washington, DC 20230 (or via the Internet at MClayton@doc.gov).

Written comments and recommendations for the proposed information collection should be sent within 30 days of publication of this notice to Susan Schechter, OMB Desk Officer, room 10201, New Executive Office Building, Washington, DC 20503.

Dated: September 14, 2000.

Madeleine Clayton,

Departmental Forms Clearance Officer, Office of the Chief Information Officer.

[FR Doc. 00–24101 Filed 9–19–00; 8:45 am]

BILLING CODE 3510–07–P

DEPARTMENT OF COMMERCE

Bureau of Economic Analysis

Foreign Ocean Carriers' Expenses in the United States—BE–29

ACTION: Extension of a currently approved collection; comment request.

SUMMARY: The Department of Commerce, as part of its continuing effort to reduce paperwork and respondent burden, invites the general public and other Federal agencies to take this opportunity to comment on proposed and/or continuing information collections, as required by the Paperwork Reduction Act of 1995, Public Law 104–13 (44 U.S.C. 3506(c)(2)(A)).

DATES: Written comments must be submitted on or before November 20, 2000.

ADDRESSES: Direct all written comments to Madeleine Clayton, DOC Forms Clearance Officer, Department of Commerce, Room 6086, 14th and Constitution Avenue, NW, Washington, DC 20230 or via the Internet at MClayton@doc.gov...

FOR FURTHER INFORMATION CONTACT: Requests for additional information or copies of the information collection instrument and instructions should be directed to: Michael Mann, Chief, Current Account Services Branch, Room 8018, Bureau of Economic Analysis, U.S. Department of Commerce, Washington, DC 20230; phone: (202) 606–9573; and fax: (202) 606–5314.

SUPPLEMENTARY INFORMATION:

I. Abstract

The Bureau of Economic Analysis is responsible for the computation and publication of the U.S. balance of payments accounts. The information collected in this survey is an integral part of the ''transportation'' portion of the U.S. balance of payments accounts. The balance of payments accounts, which are published quarterly in the Bureau's monthly publication, the *Survey of Current Business,* are one of the major statistical products of BEA. The accounts provide a statistical summary of U.S. international transactions. They are used by government and private organizations for national and international policy formulation, and analytical studies. Without the information collected in this survey, an integral component of the transportation account would be omitted. No other Government agency collects comprehensive annual data on foreign ocean carriers' expenses in the United States.

The survey requests information from U.S. agents of foreign ocean carriers. Information is collected on an annual basis from U.S. agents that handle 40 or more port calls by foreign vessels or have annual total covered expenses above $250,000. U.S. agents with less than 40 port calls or with annual total covered expenses below $250,000 are exempt from reporting.

II. Method of Collection

Mandatory reports are received from U.S. shipping agents who provide data regarding the expenses of foreign ocean carriers' in the United States. Submission of the completed report form, or computer printouts in the format of the report form, are the most expedient and economical methods of reporting the information.

III. Data

OMB Number: 0608–0012.

Form Number: BE–29.

Type of Review: Regular Submission.

Affected Public: Businesses or Other For-Profit Organizations.

Estimated Number of Respondents: 160.

Estimated Time Per Response: 4 hours.

Estimated Total Annual Burden Hours: 640 hours.

Estimated Total Annual Cost: The estimated annual cost to the Federal Government is $33,000. The estimated annual cost to the public is $19,200 based on an estimated total annual burden hours and an estimated hourly cost of $30.

Respondent's Obligation: Mandatory

Legal Authority: The International Investment and Trade in Services Act, 22 U.S.C. 3101–3108.

IV. Request for Comments

Comments are invited on: (a) Whether the continued collection of information is necessary for the proper performance of the functions of the agency, including whether the information shall have practical utility; (b) the accuracy of the agency's estimate of the burden (including hours and cost) of the proposed collection of information; (c) ways to enhance the quality, utility, and clarity of the information to be collected; and (d) ways to minimize the burden of the collection of information on respondents, including through the use of automated collection techniques or other forms of information technology.

Comments submitted in response to this notice will be summarized and/or included in the request for OMB approval of this information collection; they also will become a matter of public record.

Dated: September 15, 2000.

Madeleine Clayton,

DOC Forms Clearance Officer, Office of Chief Information Officer.

FR Doc. 00–24170 Filed 9–19–00; 8:45 a.m.]

BILLING CODE EA–3510–06–P

DEPARTMENT OF COMMERCE

Bureau of Economic Analysis

Foreign Airline Operators' Revenues and Expenses in the United States—BE–36

ACTION: Extension of a currently approved collection; comment request.

SUMMARY: The Department of Commerce, as part of its continuing effort to reduce paperwork and respondent burden, invites the general public and other Federal agencies to take this opportunity to comment on proposed and/or continuing information collections, as required by the Paperwork Reduction Act of 1995, Public Law 104–13 (44 U.S.C. 3506(c)(2)(A)).

DATES: Written comments must be submitted on or before November 20, 2000.

ADDRESSES: Direct all written comments to Madeleine Clayton, DOC Forms Clearance Officer, Department of Commerce, Room 6086, 14th and Constitution Avenue, NW, Washington, DC 20230 or via the Internet at MClayton@doc.gov.

FOR FURTHER INFORMATION CONTACT: Requests for additional information or copies of the information collection instrument and instructions should be directed to: Michael Mann, Chief, Current Account Services Branch, Room 8018, Bureau of Economic Analysis, U.S. Department of Commerce, Washington, DC 20230; phone: (202) 606-9573; and fax: (202) 606–5314.

SUPPLEMENTARY INFORMATION:

I. Abstract

The Bureau of Economic Analysis is responsible for the computation and publication of the U.S. balance of payments accounts. The information collected in this survey is an integral part of the ''transportation'' portion of the U.S. balance of payments accounts. The balance of payments accounts, which are published quarterly in the Bureau's monthly publication, the *Survey of Current Business*, are one of the major statistical products of BEA. The accounts provide a statistical summary of U.S. international transactions. They are used by government and private organizations for national and international policy formulation, and analytical studies. Without the information collected in this survey, an integral component of the transportation account would be omitted. No other Government agency collects comprehensive annual data on foreign airline operators' revenues and expenses in the United States.

The survey requests information from foreign air carriers operating in the United States. Information is collected on an annual basis from foreign air carriers with total annual covered revenues and total annual covered expenses incurred in the U.S., each over $500,000. Foreign air carriers with total annual covered revenues and expenses below $500,000 are exempt from reporting.

II. Method of Collection

Mandatory reports are received from foreign air carriers who provide data regarding their revenues and expenses in the United States. Submission of the completed report form, or computer printouts in the format of the report form, are the most expedient and economical methods of reporting the information.

III. Data

OMB Number: 0608–0013.
Form Number: BE–36.
Type of Review: Regular Submission.
Affected Public: Businesses or Other For-Profit Organizations.
Estimated Number of Respondents: 72.
Estimated Time Per Response: 5 hours.
Estimated Total Annual Burden Hours: 360 hours.
Estimated Total Annual Cost: The estimated annual cost to the Federal Government is $18,000. The estimated annual cost to the public is $10,800 based on an estimated total annual burden hours and an estimated hourly cost of $30.
Respondent's Obligation: Mandatory.
Legal Authority: The International Investment and Trade in Services Act, 22 U.S.C. 3101–3108.

IV. Request for Comments

Comments are invited on: (a) Whether the continued collection of information is necessary for the proper performance of the functions of the agency, including whether the information shall have practical utility; (b) the accuracy of the agency's estimate of the burden (including hours and cost) of the proposed collection of information; (c) ways to enhance the quality, utility, and clarity of the information to be collected; and (d) ways to minimize the burden of the collection of information on respondents, including through the use of automated collection techniques or other forms of information technology.

Comments submitted in response to this notice will be summarized and/or included in the request for OMB approval of this information collection; they also will become a matter of public record.

Dated: September 15, 2000.

Madeleine Clayton,

DOC Forms Clearance Officer, Office of Chief Information Officer.

[FR Doc. 00–24171 Filed 9–19–00; 8:45 a.m.]

BILLING CODE EA–3510–06

DEPARTMENT OF COMMERCE

Bureau of Economic Analysis

Ocean Freight Revenues and Expenses of United States Carriers—BE–30 U.S. Airline Operators' Foreign Revenues and Expenses—BE–37

ACTION: Extension of a currently approved collection; comment request.

SUMMARY: The Department of Commerce, as part of its continuing effort to reduce paperwork and respondent burden, invites the general public and other Federal agencies to take this opportunity to comment on proposed and/or continuing information collections, as required by the Paperwork Reduction Act of 1995, Public Law 104–13 (44 U.S.C. 3506(c)(2)(A)).

DATES: Written comments must be submitted on or before November 20, 2000.

ADDRESSES: Direct all written comments to Madeleine Clayton, Departmental Forms Clearance Officer, Department of Commerce, Room 6086, 14th and Constitution Avenue, NW, Washington, DC 20230 or via the Internet at MClayton@doc.gov.

FOR FURTHER INFORMATION CONTACT: Requests for additional information or copies of the information collection instrument and instructions should be directed to: Michael Mann, Chief, Current Account Services Branch, Room 8018, Bureau of Economic Analysis, U.S. Department of Commerce, Washington, DC 20230; phone: (202) 606–9573; and fax: (202) 606–5314.

SUPPLEMENTARY INFORMATION:

I. Abstract

The Bureau of Economic Analysis is responsible for the computation and publication of the U.S. balance of payments accounts. The information collected in these surveys are an integral part of the ''transportation'' portion of the U.S. balance of payments accounts. The balance of payments accounts, which are published quarterly in the Bureau's monthly publication, the *Survey of Current Business,* are one of the major statistical products of BEA. The accounts provide a statistical summary of U.S. international transactions. They are used by government and private organizations for national and international policy formulation, and analytical studies. Without the information collected in these surveys, an integral component of the transportation account would be omitted. No other Government agency

collects comprehensive quarterly data on U.S. ocean carriers' freight revenues and expenses or U.S. airline operators' foreign revenues and expenses.

These surveys request information from U.S. ocean and air carriers engaged in the international transportation of goods and/or passengers. Information is collected on a quarterly basis from U.S. ocean and air carriers with total annual covered revenues and total annual covered expenses, each over $500,000. U.S. ocean and air carriers with total annual covered revenues and expenses below $500,000 are exempt from reporting.

II. Method of Collection

Mandatory reports are received from U.S. ocean and air carriers who provide data regarding their revenues and expenses resulting from international transportation. Submission of the completed report form, or computer printouts in the format of the report form, are the most expedient and economical methods of reporting the information.

III. Data

OMB Number: 0608–0011.

Form Number: BE–30/BE–37.

Type of Review: Regular Submission.

Affected Public: Businesses or Other For-Profit Organizations.

Estimated Number of Respondents: 39/23.

Estimated Time Per Response: 5 hours/4 hours.

Estimated Total Annual Burden Hours: 780 hours/368 hours.

Estimated Total Annual Cost: For the survey of U.S. ocean carriers, the estimated annual cost to the Federal Government is $22,000 and to the public $23,400. For the survey of U.S. airline operators, the estimated annual cost to the Federal Government is $18,000 and to the public $11,040. The estimated annual cost to the public is based on an estimated total annual burden hours and an estimated hourly cost of $30.

Respondent's Obligation: Mandatory.

Legal Authority: The International Investment and Trade in Services Act, 22 U.S.C. 3101–3108.

IV. Request for Comments

Comments are invited on: (a) Whether the continued collection of information is necessary for the proper performance of the functions of the agency, including whether the information shall have practical utility; (b) the accuracy of the agency's estimate of the burden (including hours and cost) of the proposed collection of information; (c) ways to enhance the quality, utility, and clarity of the information to be collected; and (d) ways to minimize the burden of the collection of information on respondents, including through the use of automated collection techniques or other forms of information technology.

Comments submitted in response to this notice will be summarized and/or included in the request for OMB approval of this information collection; they also will become a matter of public record.

Dated: September 15, 2000.

Madeleine Clayton,

DOC Forms Clearance Officer, Office of Chief Information Officer

[FR Doc. 00–24172 Filed 9–19–00; 8:45 a.m.]

BILLING CODE EA–3510–06

DEPARTMENT OF COMMERCE

International Trade Administration

Antidumping or Countervailing Duty Order, Finding, or Suspended Investigation; Opportunity To Request Administrative Review

AGENCY: Import Administration, International Trade Administration, Department of Commerce.

ACTION: Notice of Opportunity to Request Administrative Review of Antidumping or Countervailing Duty Order, Finding, or Suspended Investigation.

Background

Each year during the anniversary month of the publication of an antidumping or countervailing duty order, finding, or suspension of investigation, an interested party, as defined in section 771(9) of the Tariff Act of 1930, as amended, may request, in accordance with section 351.213 (1999) of the Department of Commerce (the Department) Regulations, that the Department conduct an administrative review of that antidumping or countervailing duty order, finding, or suspended investigation.

Opportunity To Request a Review: Not later than the last day of September 2000, interested parties may request administrative review of the following orders, findings, or suspended investigations, with anniversary dates in September for the following periods:

	Period
Antidumping Duty Proceedings	
Argentina: Silicon Metal, A–357–804	9/1/99–8/31/00
Canada:	
Steel Jacks,* A–122–006	9/1/99–12/31/99
New Steel Rail, Except Light Rail, A–122–804	9/1/99–8/31/00
Germany: Large Newspaper Printing Presses and Components Thereof A–428–821	9/1/99–8/31/00
Italy: Stainless Steel Wire Rod, A–475–820	9/1/99–8/31/00
Japan:	
Flat Panel Displays, A–588–817	9/1/99–8/31/00
Large Newspaper Printing Presses and Components Thereof, A–588–837	9/1/99–8/31/00
Stainless Steel Wire Rod, A–588–843	9/1/99–8/31/00
Republic of Korea: Stainless Steel Wire Rod, A–580–829	9/1/99–8/31/00
Spain: Stainless Steel Wire Rod, A–469–807	9/1/99–8/31/00
Sweden: Stainless Steel Wire Rod, A–401–806	9/1/99–8/31/00
Taiwan:	
Chrome-Plated Lug Nuts,** A–583–810	9/1/99–8/31/00
Stainless Steel Wire Rod, A–583–828	9/1/99–8/31/00
The People's Republic of China:	
CDIW Fittings & Glands,* A–570–820	9/1/99–12/31/99
Freshwater Crawfish Tail Meat, A–570–848	9/1/99–8/31/00
Greige Polyester/Cotton Printcloth, A–570–101	9/1/99–8/31/00
Chrome-Plated Lug Nuts,** A–570–808	9/1/99–8/31/00

	Period
Countervailing Duty Proceedings	
Canada: New Steel Rail, Except Light Rail, C–122–805	1/1/99–12/31/99
Italy: Stainless Steel Wire Rod, C–475–821	1/1/99–12/31/99
Suspension Agreements	
Argentina: Carbon Steel Wire Rod, C–357–004	9/1/99–8/31/00
Peru: Cotton Shop Towels,* C–333–401	9/1/99–12/31/99

*Order revoked effective 01/01/2000, as a result of sunset review.

**This order is currently undergoing a ''sunset'' review pursuant to section 751(c) of the Act. If subsequent to publication of this opportunity notice the order should be revoked pursuant to ''sunset,'' any review (if requested) or automatic liquidation instruction (if no review is requested) will only cover through the last day prior to the effective date of revocation.

In accordance with section 351.213(b) of the regulations, an interested party as defined by section 771(9) of the Act may request in writing that the Secretary conduct an administrative review. For both antidumping and countervailing duty reviews, the interested party must specify for which individual producers or exporters covered by an antidumping finding or an antidumping or countervailing duty order or suspension agreement for which it is requesting a review, and the requesting party must state why it desires the Secretary to review those particular producers or exporters. If the interested party intends for the Secretary to review sales of merchandise by an exporter (or a producer if that producer also exports merchandise from other suppliers) which were produced in more than one country of origin and each country of origin is subject to a separate order, then the interested party must state specifically, on an order-by-order basis, which exporter(s) the request is intended to cover.

Six copies of the request should be submitted to the Assistant Secretary for Import Administration, International Trade Administration, Room 1870, U.S. Department of Commerce, 14th Street & Constitution Avenue, NW, Washington, DC 20230. The Department also asks parties to serve a copy of their requests to the Office of Antidumping/Countervailing Enforcement, Attention: Sheila Forbes, in room 3065 of the main Commerce Building. Further, in accordance with section 351.303(f)(l)(i) of the regulations, a copy of each request must be served on every party on the Department's service list.

The Department will publish in the **Federal Register** a notice of ''Initiation of Administrative Review of Antidumping or Countervailing Duty Order, Finding, or Suspended Investigation'' for requests received by the last day of September 2000. If the Department does not receive, by the last day of September 2000, a request for review of entries covered by an order, finding, or suspended investigation listed in this notice and for the period identified above, the Department will instruct the Customs Service to assess antidumping or countervailing duties on those entries at a rate equal to the cash deposit of (or bond for) estimated antidumping or countervailing duties required on those entries at the time of entry, or withdrawal from warehouse, for consumption and to continue to collect the cash deposit previously ordered.

This notice is not required by statute but is published as a service to the international trading community.

Dated: September 14, 2000.

Thomas F. Futtner,

Acting Deputy Assistant Secretary, Group II for Import Administration.

[FR Doc. 00–24186 Filed 9–19–00; 8:45 am]

BILLING CODE 3510–DS–P

DEPARTMENT OF COMMERCE

International Trade Administration

National Institute of Standards and Technology; Notice of Decision on Application for Duty-Free Entry of Scientific Instrument

This decision is made pursuant to Section 6(c) of the Educational, Scientific, and Cultural Materials Importation Act of 1966 (Pub. L. 89–651, 80 Stat. 897; 15 CFR part 301). Related records can be viewed between 8:30 A.M. and 5:00 P.M. in Room 4211, U.S. Department of Commerce, 14th and Constitution Avenue, N.W., Washington, D.C.

Docket Number: 00–018. *Applicant:* National Institute of Standards and Technology, Gaithersburg, MD 20899–8371. *Instrument:* Auger Microprobe, Model JAMP–7830F. *Manufacturer:* JEOL Ltd., Japan. *Intended Use:* See notice at 65 FR 47404, August 2, 2000.

Comments: None received. *Decision:* Approved. No instrument of equivalent scientific value to the foreign instrument, for such purposes as it is intended to be used, is being manufactured in the United States. *Reasons:* The foreign instrument provides: (1) a maximum energy resolution of 0.05%, (2) a hemispherical analyzer which permits introduction and optimal placement of both a wavelength and an energy dispersive x-ray detector and (3) a 2-stage introduction pot capable to $8x10^{11}$ Torr. A domestic manufacturer of similar equipment advised September 11, 2000 that (1) these capabilities are pertinent to the applicant's intended purpose and (2) it knows of no domestic instrument or apparatus of equivalent scientific value to the foreign instrument for the applicant's intended use.

We know of no other instrument or apparatus of equivalent scientific value to the foreign instrument which is being manufactured in the United States.

Gerald A. Zerdy,

Program Manager, Statutory Import Programs Staff.

[FR Doc. 00–24187 Filed 9–19–00; 8:45 am]

BILLING CODE 3510–DS–P

DEPARTMENT OF COMMERCE

National Institute of Standards and Technology

Submission for OMB Review; Comment Request

The Department of Commerce (DOC) has submitted to the Office of Management and Budget (OMB) for clearance the following proposal for collection of information under the provisions of the Paperwork Reduction Act (44 U.S.C. Chapter 35).

Agency: National Institute of Standards and Technology (NIST).

Title: Advanced Technology Program (ATP).

Agency Form Number: NIST–1262 and NIST–1263.

OMB Approval Number: 0693–0009.

Type of Request: Revision to an existing collection of information.

Burden Hours: 14,875.

Number of Respondents: 1,000.

Average Hours Per Response: 30 hours for full proposals; 1 ½ hours for pre-proposals; and, 5 hours for monitoring reports.

Needs and Uses: ATP is a competitive cost-sharing program designed to assist United States' businesses pursue high-risk, enabling technologies with significant commercial/economic potential. The ATP provides multi-year funding through the use of cooperative agreements to single companies and to industry-led joint ventures. In order to participate, proposals must be submitted addressing the ATP criteria. The information is used to perform the technical and business reviews of the proposals to determine if an award should be granted.

Affected Public: Businesses or other for-profit organizations, not-for-profit institutions, individuals.

Frequency: On occasion, yearly, quarterly, biennially, semi-annually.

Respondent's Obligation: Required to obtain or retain a benefit.

OMB Desk Officer: Kamela White (202) 395–3630.

Copies of the above information collection proposal can be obtained by calling or writing Madeleine Clayton, DOC Forms Clearance Officer, (202) 482–3129, Department of Commerce, Room 6086, 14th and Constitution Avenue, NW, Washington, DC 20230 (or via the Internet at MClayton@doc.gov).

Written comments and recommendations for the proposed information collection should be sent within 30 days of publication of this notice to Kamela White, Room 10236, New Executive Office Building, 725 17th Street, NW, Washington, DC 20503.

Dated: September 15, 2000.

Madeleine Clayton,

Departmental Forms Clearance Officer, Office of the Chief Information Officer.

[FR Doc. 00–24169 Filed 9–19–00; 8:45 am]

BILLING CODE 3510–13–P

CONSUMER PRODUCT SAFETY COMMISSION

[CPSC Docket No. 00–C0013]

AZ3, Inc., d/b/a/ BCBG Max Azria, Provisional Acceptance of a Settlement Agreement and Order

AGENCY: Consumer Product Safety Commission.

ACTION: Notice.

SUMMARY: It is the policy of the Commission to publish settlements which it provisionally accepts under the Consumer Product Safety Act in the **Federal Register** in accordance with the terms of 16 C.F.R. 1118.20(e). Published below is a provisionally-accepted Settlement Agreement with AZ3, Inc., d/b/a BCBG Max Azria, containing a civil penalty of $75,000.

DATES: Any interested person may ask the Commission not to accept this agreement or otherwise comment on its contents by filing a written request with the Office of the Secretary by October 5, 2000.

ADDRESSES: Persons wishing to comment on this Settlement Agreement should send written comments to the Comment 00–C0013, Office of the Secretary, Consumer Product Safety Commission, Washington, DC 20207.

FOR FURTHER INFORMATION CONTACT: Seth B. Popkin, Trial Attorney, Office of Compliance and Enforcement, Consumer Product Safety Commission, Washington, DC 20207; telephone (301) 504–0626, 1358.

SUPPLEMENTAL INFORMATION: The test of the agreement and order appears below.

Dated: September 14, 2000.

Sadye E. Dunn,

Secretary.

Consumer Product Safety Commission

[CPSC Docket No. 00–C0013]

In the Matter of AZ3, Inc., d/b/a BCBG Max Azria; Settlement Agreement and Order

1. This Settlement Agreement and Order entered into between AZ3, Inc., d/b/a BCBG Max Azria (''BCBG''), and the staff (''Staff'') of the United States Consumer Product Safety Commission (''Commission''), in accordance with 16 CFR 1118.20.

I. The Parties

2. The Commission is an independent federal regulatory agency established pursuant to, and responsible for the enforcement of, the Consumer Product Safety ACt, 15 U.S.C. 2051–2084 (''CPSA'').

3. BCBG is a corporation organized and existing under the laws of the state of California. Its principal offices are located at 2761 Fruitland Avenue, Vernon, California. BCBG is a clothing manufacturer and retailer.

II. Staff Allegations

A. 1996 Violations of the Clothing Standard and the FFA

4. From August through December 1996, BCBG imported 3,198 two-textured chenille sweaters, and distributed, sold, and offered for sale in the United Sates 3,089 of those imported sweaters (collectively ''Sweaters'').

5. The Sweaters were subject to the Standard for the Flammability of Clothing Textiles, 16 CFR 1610 (''Clothing Standard'') issued under the Flammable Fabrics Act, 15 U.S.C. 1191–1204 (''FFA''), and, specifically, under section 4 of the FFA, 15 U.S.C. 1193.

6. In 1996, the Staff tested the Sweaters and found that the Sweaters were classified as ''Class 3'' under the Clothing Standard. These test results established that the sweaters were dangerously flammable and unsuitable for clothing because of their rapid and intense burning. *See* 16 CFR 1610.3(a)(3).

7. In 1996, the staff requested that BCBG take corrective action. BCBG agreed to a voluntary recall of the Sweaters, and, on December 18, 1996, the Staff announced a recall of the Sweaters.

8. BCBG knowingly violated section 3(a) of the FFA, 15 U.S.C. 1192(a), and the Clothing Standard, by importing, distributing, selling, and offering for sale in commerce the Sweaters, as the term ''knowingly'' is defined in section 5(e)(4) of the FFA, 15 U.S.C. 1194(e)(4). *See also* 16 CFR 1610.32(a). Pursuant to section 5(e)(1) of the FFA, 15 U.S.C. 1194(e)(1), these violations subjected BCBG to a civil penalty.

B. 1999 Violations of the Clothing Standard and the FFA

9. After the recall, from 1997 to 1999, the Staff contacted BCBG on a regular basis to encourage BCBG to destroy, export, or recondition BCBG's inventory of the Sweaters so that the Sweaters would not enter United States commerce. The Staff warned BCBG of the dangers posed by the BCBG's continued retention of the Sweaters.

10. BCBG declined to destroy the Sweaters and told the Staff that BCBG was seeking foreign buyers for the Sweaters.

11. From approximately July 1999 through September 9, 1999, BCBG sold 185 of the Sweaters, and offered for sale a greater number, in the BCBG employee sales store. The persons shopping at this store included BCBG employees and their families, friends, and guests, middlemen and buyers who may resell their purchases at another store, and other members of the public.

12. By offering these violative Sweaters for sale in United States commerce, and by selling them, BCBG knowingly violated section 3(a) of the FFA, 15 U.S.C. 1192(a), and the Clothing Standard, as the term ''knowingly'' is defined in section 5(e)(4) of the FFA, 15 U.S.C. 1194(e)(4). *See also* 16 CFR 1610.32(a). Pursuant to section 5(e)(1) of the FFA, 15 U.S.C. 1194(e)(1), these violations subjected BCBG to a civil penalty.

C. 1999 CPSA Violations

13. Each of the Sweaters is a ''consumer product,'' and BCBG is a ''manufacturer'' and ''retailer'' of a

consumer product, as those terms are defined in sections 3(a)(1), (4), and (6) of the CPSA, 15 U.S.C. 2052(a)(1), (4), and (6).

14. BCBG is subject to section 15(b) of the CPSA, 15 U.S.C. 2064(b), which requires every manufacturer and retailer of a consumer product distributed in commerce, who obtains information which reasonably supports the conclusion that such product creates an unreasonable risk of serious injury or death, to immediately inform the Commission of such risk.

15. BCBG employees had knowledge of the 1999 Sweaters sales and offers of sale as they were occurring, i.e., from approximately July 1999 through September 9, 1999. Pursuant to 16 C.F.R. 1115.14(b), the employees' knowledge may be imputed to BCBG.

16. BCBG's management acquired actual knowledge of the 1999 Sweaters sales and offers of sale no later than September 9, 1999. This knowledge, including the fact that the Sweaters were classified as ''Class 3'' under the Clothing Standard, reasonably supported the conclusion that the 1999 Sweaters sales created an unreasonable risk of serious injury or death. Under the circumstances, BCBG was required to inform the Commission of such risk within 24 hours, i.e., by September 10, 1999. *See* CPSA 15(b), 15 U.S.C. 2064(b); 16 CFR 1115.14 (d), (e).

17. BCBG failed to inform the Staff of the 1999 Sweaters sales and the associated risks until October 19, 1999. This failure violated the CPSA. *See* CPSA § 19(a)(4), 15 U.S.C. 2068(a)(4).

18. BCBG knowingly failed to inform the Staff of the 1999 Sweaters sales in a timely manner, as the term ''knowingly'' is defined in section 20(d) of the CPSA, 15 U.S.C. 2069(d). Pursuant to section 20(a)(1) of the CPSA, 15 U.S.C. 2069(a)(1), this failure subjected BCBG to a civil penalty.

III. Response of BCBG

19. BCBG denies the Staff's allegations that BCBG knowingly or otherwise violated the Clothing Standard, the FFA, or the CPSA, and the content found in paragraphs 4–18.

20. In January 1999, BCBG sold and shipped 509 Sweaters, of the approximately 979 Sweaters in its possession, to buyers in Japan and Israel, and BCBG did so properly pursuant to Commission procedures.

21. From September 9, 1999, and continuing through the date of this Settlement Agreement and Order, BCBG conducted a voluntary recall effort concerning the 1999 Sweaters sales.

IV. Agreement of the Parties

22. The Commission has jurisdiction over this matter under the CPSA, the FFA, and the Federal Trade Commission Act, 15 U.S.C. 41 *et seq.*

23. This Settlement Agreement and Order is in settlement of the Staff's allegations and does not constitute an admission by BCBG that the law has been violated or of anything contained in paragraphs 4–18.

24. In settlement of this matter, BCBG shall pay to the Commission a civil penalty in the amount of seventy-five thousand dollars ($75,000.00). BCBG shall pay this sum in two (2) payments as follows: (a) BCBG shall deliver to the Commission forty thousand dollars ($40,000.00) within twenty (20) calendar days of service of the Commission's Order accepting this Agreement; and (b) BCBG shall deliver to the Commission thirty-five thousand dollars ($35,000.00) within fifty (50) calendar days of service of the Commission's Order accepting this Agreement. Each payment shall be by check payable to the order of the United States Treasury.

25. BCBG knowingly, voluntarily, and completely waives any rights it may have in this matter (1) to the issuance of a Complaint, (2) to an administrative or judicial hearing, (3) to judicial review or other challenge or contest of the validity of the Commission's Order, (4) to a determination by the Commission as to whether or not BCBG failed to comply with the FFA or CPSA, as alleged, (5) to a statement of findings of fact and conclusions of law, and (6) to any claims under the Equal Access to Justice Act.

26. Upon provisional acceptance of this Settlement Agreement and Order by the Commission, this Settlement Agreement and Order shall be placed on the public record and shall be published in the **Federal Register** in accordance with the procedures set forth in 16 CFR 1118.20(e). In accordance with 16 CFR 1118.20(f), if the Commission does not receive any written request not to accept the Settlement Agreement and Order within fifteen (15) days, the Settlement Agreement and Order shall be deemed finally accepted on the sixteenth (16th) day after the date it is published in the **Federal Register**.

27. This Settlement Agreement and Order becomes effective upon its final acceptance by the Commission and service upon BCBG.

28. The Commission may publicize the terms of the Settlement Agreement and Order.

29. This Settlement Agreement and Order shall apply to, and be binding upon, BCBG and its successors, assigns, agents, representatives, and employees, directly or through any corporation, subsidiary, division, or other business entity, or through any agency, device, or instrumentality.

30. This Settlement Agreement may be used in interpreting the Order. Agreements, understandings, representations, or interpretations made outside of this Settlement Agreement and Order may not be used to vary or contradict its terms.

31. BCBG agrees to entry of the attached Order, which is incorporated herein by reference, and agrees to be bound by its terms.

Dated: August 14, 2000.

By: Max Azria, President and CEO, AZ3, Inc., d/b/a BCBG Max Azria.

The Consumer Product Safety Commission.

Alan H. Schoem,
Assistance Executive Director, Office of Compliance.

Eric L. Stone,
Director, Legal Division, Office of Compliance.

Dated: August 17, 2000.

By: Seth B. Popkin, Trial Attorney, Legal Division, Office of Compliance.

Consumer Product Safety Commission

[CPSC Docket No. 00–C0013]

In the Matter of AZ3, Inc., d/b/a BCBG Max Azria; *Order*

Upon consideration of the Settlement Agreement entered into between AZ3, Inc., d/b/a BCBG Max Azria (''BCBG''), and the United States Consumer Product Safety Commission (''Commission'') staff, and the Commission having jurisdiction over the subject matter and over BCBG, and it appearing that the Settlement Agreement and Order is in the public interest, it is

Ordered, that the Settlement Agreement be, and hereby is, accepted; and it is

Further Ordered, that BCBG shall pay to the Commission a civil penalty in the amount of seventy-five thousand dollars ($75,000.00), and that BCBG shall pay this sum in two (2) payments as follows: (a) BCBG shall deliver to the Commission forty thousand dollars ($40,000.00) within twenty (20) calendar days of service of this final Order upon BCBG; and (b) BCBG shall deliver to the Commission thirty-five thousand dollars ($35,000.00) within fifth (50) calendar days of service of this final Order upon BCBG. Each payment shall be by check payable to the order of the United States Treasury.

Provisionally accepted and Provisional Order issued on the 14th day of September, 2000.

By Order of the Commission:

Sadye E. Dunn,

Secretary, Consumer Product Safety Commission.

[FR Doc. 00–24076 Filed 9–19–00; 8:45 am]

BILLING CODE 6355–01–M

CONSUMER PRODUCT SAFETY COMMISSION

[CPSC Docket No. 00–C0014]

Galoob Toys, Inc., a Corporation, Provisional Acceptance of a Settlement Agreement and Order

AGENCY: Consumer Product Safety Commission.

ACTION: Notice.

SUMMARY: It is the policy of the Commission to publish settlements which it provisionally accepts under the Consumer Product Safety Act in the **Federal Register** in accordance with the terms of 16 CFR 1118.20. Published below is a provisionally-accepted Settlement Agreement with Galoob Toys, Inc., a corporation, containing a civil penalty of $400,000.

DATES: Any interested person may ask the Commission not to accept this agreement or otherwise comment on its contents by filing a written request with the Office of the Secretary by October 5, 2000.

ADDRESSES: Persons wishing to comment on this Settlement Agreement should send written comments to the Comment 00–C0014, Office of the Secretary, Consumer Product Safety Commission, Washington, DC 20207.

FOR FURTHER INFORMATION CONTACT: William J. Moore, Trial Attorney, Office of Compliance and Enforcement, Consumer Product Safety Commission, Washington, DC 20207; telephone (301) 504–0626, 1348.

SUPPLEMENTARY INFORMATION: The text of the Agreement and Order appears below.

Dated: September 15, 2000.

Sadye E. Dunn,

Secretary.

Settlement Agreement and Order

1. This Settlement Agreement, made by and between the staff (''the staff'') of the U.S. Consumer Product Safety Commission (''the Commission'') and Galoob Toys, Inc., (''Galoob''), a corporation, in accordance with 16 CFR 1118.20 of the Commission's Procedures for Investigations, Inspections, and Inquiries under the Consumer Product Safety Act (''CPSA''), is a settlement of the staff allegations set forth below.

I. The Parties

2. The Commission is an independent federal regulatory agency responsible for the enforcement of the Consumer Product Safety Act, 15 U.S.C. 2051–2084.

3. Galoob is a corporation organized and existing under the laws of the State of Delaware. Its principal offices are located at 5 Thomas Mellon Circle, Suite 304, San Francisco, California. Galoob is a wholly owned subsidiary of Hasbro, Inc., (''Hasbro'') Before ti was acquired by Hasbro, Galoob Toys, Inc. was an independent corporation doing business as Lewis Galoob Toys, Inc.

II. Staff Allegations

4. From on or before November 1994 through approximately August 1998, Galoob, a corporation and toy manufacturer, made, sold and distributed into United States commerce over 8 million ''flying'' toys known as the ''Sky Dancers''. Galoob is, therefore, a manufacturer and distributor of a consumer product in U.S. commerce pursuant to 15 U.S.C. 2052 (a)(1), (4), (5) an (6).

5. On November 2, 1998 Hasbro purchased Galoob's stock and Galoob became one of Hasbro's wholly owned subsidiaries. Galoob remained and remains a corporation and a separate legal entity.

6. Galoob experienced several toy manufacturing/production problems resulting in unsafe performance of the Sky Dancers shortly after production began. In late 1994 and early 1995, production defects included: use of wings of uneven weight on the same Sky Dancer, improper methods for centering and affixing wings to the body of the toy; and producing wings with padding that was susceptible of coming off the wing.

7. In 1995 Galoob made several prospective changes in the design and production of the Sky Dancers intended to reduce performance problems and make the Sky Dancer safer to use. After Galoob distributed approximately 100,000 Sky Dancers into U.S. commerce, Galoob reworked a large number of Sky Dancers in inventory to attempt to eliminate safety defects. The approximately 100,000 Sky Dancers sold were not recalled or reworked.

8. Even as designed and produced as intended, the Sky Dancers are susceptible of causing injury. The Sky Dancer uses a pull cord to launch the hard plastic toy; to send it spinning up and away from its base at a high rate of speed. Once launched the Sky Dancer uses two propeller-like blades or ''wings'' (attached to the toy) spinning rapidly to make it ''fly,'' often in unpredictable directions and angles, allowing it to forcefully strike the user or nearby playmates, usually in the face or head.

9. Before formal ratification and signing the necessary documents to acquire Galoob, Hasbro examined Galoob's records reflecting its assets, liabilities and other documents including the history of the ''Sky Dancers.''

10. Between January 1995 and November 1998, Galoob received 165 injury complaints, including damage to the eyes, face and teeth. Hasbro learned of the problem with the product before acquiring Galoob.

11. On November 2, 1998, Hasbro acquired Galoob. Following the acquisition, on November 18, 1998 Hasbro/Galoob made a telephone report and, on November 23, 1998, sent a preliminary report letter to the CPSC staff under Section 15(b) of the CPSA. 15 U.S.C. 2064(b). By letter dated December 15, 1998, the CPSA staff requested full report information from the reporting firm pursuant to the CPSA. *Id.*

12. On January 14, 1999 Hasbro/Galoob filed a limited report with the Commission and filed its full report on April 8, 1999. Galoob undertook a voluntary recall of the Sky Dancers in June 2000.

13. Galoob, during 1994 testing and early production, and subsequently, as it received injury reports through 1998, obtained information which reasonably supported the conclusion that the Sky Dancers contained defects which could create a substantial product hazard but failed to report to the Commission in a timely manner as required by section 15(b) of the CPSA, 15 U.S.C. 2064(b). Hasbro obtained such information before it formally acquired the stock of Galoob on November 2, 1998.

14. By failing to furnish information as required by section 15(b) of the CPSA, Galoob committed a prohibited act under section 19(a)(4) of the CPSA, 15 U.S.C. 2068(a)(4).

15. The staff alleges this violation was committed ''knowlingly'' as the term in defined in section 20(d) of the CPSC, 15 U.S.C. 2069(d).

III. Response of Galoob

16. Galoob denies the staff allegations numbered six through ten and 13 through 15 above. It denies the Galoob Sky Dancer contains a defect or that it creates a substantial product hazard pursuant to section 15(a) of the CPSA, 15 U.S.C. 2064(a) or that it creates an unreasonable risk of serious injury or death pursuant to section 15(b) of the

CPSA. Galoob denies that Sky Dancers or Galoob has caused any injuries. Galoob further denies that it or Hasbro violated the reporting requirements of section 15(b) of the CPSA, 15 U.S.C. 2064(b) or 16 C.F.R. Part 1115.

17. Galoob asserts that Sky Dancers were properly designed, tested and manufactured and contained adequate warnings and labeling.

18. Galoob enters this Settlement Agreements and Order for settlement purposes only, to avoid incurring legal costs and expenses.

IV. Agreement of the Parties

19. The Commission has jurisdiction over this matter and over Galoob under the Consumer Product Safety (CPSA), 15 U.S.C. 2051 *et seq.*

20. Galoob knowingly, voluntarily and completely waives any rights it may have in the above captioned case (1) to the issuance of a Compliant in this matter; (2) to an administrative or judicial hearing with respect to the staff allegations cited herein (3) to judicial review or other challenge or contest of the validity of the Commission's Order; (4) to a determination by the Commission as to whether a violation of section 15(b) of the CPSA, 15 U.S.C. 2064(b), has occurred, and (5) to a statement of findings of fact and conclusions of law with regard to the staff allegations.

21. Upon provisional acceptance of this Settlement Agreement and Order by the Commission, this Settlement Agreement and Order shall be placed on the public record and shall by published in the **Federal Register** in accordance with 16 CFR 1118.20.

22. The Settlement Agreement and Order becomes effective upon final acceptance by the Commission. Galoob shall pay a civil penalty in the amount of four hundred thousand and no/ dollars ($400,000.00) within 10 calender days of receiving service of such final Settlement Agreement and Order.

23. This Settlement Agreement and Order is not deemed or construed as an admission by Galoob (a) of any liability or wrongdoing by Galoob or, (b) that Galoob violated any law or regulation. Nothing contained in this Settlement Agreement and Order precludes Galoob from raising any defenses in any future litigation not arising out of the terms of this Settlement Agreement and Order.

24. Upon final acceptance of this Settlement Agreement by the Commission, the issuance of the implementing Order, and the full and timely payment by Galoob to the United States Treasury of a civil penalty in the amount of four hundred thousand dollars ($400,000.00), the Commission specifically waives its right to initiate, either by referral to the Department of Justice, or bringing in its own name, any action for civil penalties relating to any of the events that gave rise to the staff allegations in paragraphs four through 15, *supra,* against (a) Galoob; (b) any of Galoob's current or former parents, subsidiaries, affiliates, divisions or related entities; (c) any shareholder, director, officer, employee, agent or attorney of any entity referenced in (a) or (b), and (d) any successor, heir, or assign of the persons described in (a) or (b) above.

25. Upon final acceptance by the Commission, the parties agree that the Commission may publicize the terms of the Settlement Agreement and Order.

26. Galoob agrees to the entry of the attached Order, which is incorporated herein by reference, and agrees to be bound by its terms.

27. The Commission's Order in this matter is issued under the provisions of the CPSA, 15 U.S.C. 2051 *et seq.*, and a violation of this Order may subject Galoob to appropriate legal action.

28. This Settlement Agreement and Order is binding upon and shall inure to the benefit of Galoob, its parent and each of their assigns or successors.

29. Agreements, understandings, representations, or interpretations made outside this Settlement Agreement and Order may not be used to vary or to contradict its terms.

30. If, after the effective date hereof, any provision of this Settlement Agreement and Order is held to be illegal, invalid, or unenforceable under present or future laws effective during the terms of the Settlement and Order, such provision shall be fully severable. The rest of the Settlement Agreement and Order shall remain in full effect, unless the Commission determines that severing the provision materially impacts the purpose of the Settlement Agreement and Order.

31. This Settlement Agreement and Order shall not be waived, changed, amended, modified, or otherwise altered, except in writing executed by the party against whom such amendment, modification, alteration, or waiver is sought to be enforced, and approved by the Commission.

Galoob Toys, Inc.
Dated: August 17, 2000.

Alfred J. Vurmhra,
Executive Vice President—Global Operations, Chief Financial Officer.

The U.S. Consumer Product Safety Commission.
Alan H. Schoem,
Assistant Executive Director, Office of Compliance.
Eric L. Stone,
Director, Legal Division, Office of Compliance.
Dated: August 9, 2000.

William J. Moore, Jr.,
Trial Attorney, Legal Division, Office of Compliance.

Order

Upon consideration of the Settlement Agreement entered into between Galoob Toys, Inc., a corporation, and the staff of the U.S. Consumer Product Safety Commission; and the Commission having jurisdiction over the subject matter and Galoob Toys, Inc., and it appearing that the Settlement Agreement and Order is in the public interest, it is

Ordered, that the Settlement Agreement be, and hereby is, accepted, and it is

Further Ordered, that, upon final acceptance of the Settlement Agreement and Order, Galoob Toys, Inc. shall pay the Commission a civil penalty in the amount of FOUR HUNDRED THOUSAND AND no/100 dollars, ($400,000.00) within ten (10) calendar days after service of this Final Order upon Galoob Toys, Inc.

Provisionally accepted and Provisional Order issued on the 15th day of September, 2000.

By Order of the Commission.

Sadye E. Dunn,
Secretary, U.S. Consumer Product Safety Commission.

[FR Doc. 00–24188 Filed 9–19–00; 8:45 am]
BILLING CODE 6355–01–M

CORPORATION FOR NATIONAL AND COMMUNITY SERVICE

Sunshine Act Meeting

The Board of Directors of the Corporation for National and Community Service gives notice of the following meeting:

DATE AND TIME: Wednesday, September 27, 2000, 10 a.m.–12:30 p.m.

PLACE: Corporation for National Service 1201 New York Avenue, NW, 8th Floor conference room, Washington, D.C.

STATUS: Open.

MATTERS TO BE CONSIDERED:

I. Chair's Opening Remarks
II. Approval of Prior Meeting Minutes
III. Report by the Chief Executive Officer
IV. Committee Reports
  A. Executive Committee
  B. Management, Audit, annd Governance Committee Audit Report
  C. Communications Committee
  D. Planning and Evaluation Committee Strategic Plan

V. Reauthorization Update

VI. National Service Reports

Kellogg Initiative on Service Learning

Collaboration with Warner Brothers

Literacy Study

Association of State Service Commissions

VII. Future Board Meeting Dates

VIII. Public Comment

IX. Adjournment

ACCOMMODATIONS: Anyone who needs an interpreter or other accommodation should notify the Corporation's contact person.

CONTACT PERSON FOR FURTHER INFORMATION: Rhonda Taylor, Associate Director of Special Projects and Initatives, Corporation for National Service, 8th Floor, Room 8619, 1201 New York Avenue NW, Washington, D.C. 20525. Phone (202) 606–5000 ext. 282. Fax (202) 565–2794. TDD: (202) 565–2799.

Dated: September 18, 2000.

Thomasenia P. Duncan,

General Counsel, Corporation for National and Community Service.

[FR Doc. 00–24264 Filed 9–18–00; 1:20 pm]

BILLING CODE 6050–28–M

DEPARTMENT OF DEFENSE

Department of the Army

Army Science Board; Notice of Closed Meeting

In accordance with Section 10(a)(2) of the Federal Advisory Committee Act (Pub. L. 92 463), announcement is made of the following Committee Meeting:

Name of Committee: Army Science Board (ASB).

Date of Meeting: 18 19 September 2000.

Time of Meeting: 0730–1700.

Place: President Towers (Sept 18)/Fort AP Hill (Sept 19).

Agenda: The Army Science Board's (ASB) Study Group on ''Countermine'' will meet to have subgroup briefings and overall group discussion on September 18 and then, on September 19, will travel to Fort AP Hill for active demonstrations. This meeting will be closed to the public in accordance with section 552b(c) of Title 5, U.S.C., specifically subparagraph (1) thereof, and Title 5, U.S.C., Appendix 2, subsection 10(d). (Please see attached Agendas.) The classified preclude opening any portion of this meeting. For further information, please contact our office at (703) 604–7479.

Wayne Joyner,

Program Support Specialist, Army Science Board.

Agenda—The Army Science Board's Countermine Summer Study

September 18, 19, 2000.

(Tentative Agenda)

September 18, 2000

0800–0900—Introduction—Classified
0900–1000—Wide Area Surveillance Panel—Classified
1000–1015—Break
1015–1115—Maneuver Unit Support and Route Clearing—Classified
1115–1215—Mine Clearing in Surf Zone—Classified
1215–1315—Lunch
1315–1415—Physical Security and Humanitarian Demining—Classified
1415–1515—Breaching—Classified
1515–1530—Break
1530–1630—Basic Research and Phenomenology—Classified
1630–1700—Closing Discussion

(The Study chairperson wants to keep open the option of classified discussions for both days of this meeting.) For additional clarification, phone Debbie Butler at 703–601–1552.

September 19, 2000

0730—Depart from Presidential Towers to Fort AP Hill, VA
0930—Arrive at Demo site 71 Alpha
0945—John Fasulo mine threat, mine blast demonstration
1100—Mine Hunter/Killer brief and system demo
1130—HSTAMIDS brief and system demo
1200—Lunch
1245—S&T system brief and demo at JUXOCO site
1315—JUXOCO site tour
1345—Wrap up/discussion
1430—Depart Demo site 71 Alpha
1630—Arrive back at Presidential Towers, Crystal City

[FR Doc. 00–24080 Filed 9–19–00; 8:45 am]

BILLING CODE 3710–08–M

DEPARTMENT OF EDUCATION

Notice of Proposed Information Collection Requests

AGENCY: Department of Education.

SUMMARY: The Leader, Regulatory Information Management Group, Office of the Chief Information Officer, invites comments on the proposed information collection requests as required by the Paperwork Reduction Act of 1995.

DATES: Interested persons are invited to submit comments on or before November 20, 2000.

SUPPLEMENTARY INFORMATION: Section 3506 of the Paperwork Reduction Act of 1995 (44 U.S.C. Chapter 35) requires that the Office of Management and Budget (OMB) provide interested Federal agencies and the public an early opportunity to comment on information collection requests. OMB may amend or waive the requirement for public consultation to the extent that public participation in the approval process would defeat the purpose of the information collection, violate State or Federal law, or substantially interfere with any agency's ability to perform its statutory obligations. The Leader, Regulatory Information Management Group, Office of the Chief Information Officer, publishes that notice containing proposed information collection requests prior to submission of these requests to OMB. Each proposed information collection, grouped by office, contains the following: (1) Type of review requested, e.g. new, revision, extension, existing or reinstatement; (2) Title; (3) Summary of the collection; (4) Description of the need for, and proposed use of, the information; (5) Respondents and frequency of collection; and (6) Reporting and/or Recordkeeping burden. OMB invites public comment. The Department of Education is especially interested in public comment addressing the following issues: (1) is this collection necessary to the proper functions of the Department; (2) will this information be processed and used in a timely manner; (3) is the estimate of burden accurate; (4) how might the Department enhance the quality, utility, and clarity of the information to be collected; and (5) how might the Department minimize the burden of this collection on the respondents, including through the use of information technology.

Dated: September 14, 2000.

John Tressler,

Leader, Regulatory Information Management, Office of the Chief Information Officer.

Office of Special Education and Rehabilitative Services

Type of Review: New.

Title: National Longitudinal Transition Study-2 (NLTS2) Survey Package.

Frequency: One time.

Affected Public: Businesses or other for-profit; Not-for-profit institutions.

Reporting and Recordkeeping Hour Burden:

Responses: 18,977.

Burden Hours: 7,843.

Abstract: NLTS2 will provide nationally representative information about youth with disabilities in secondary school and in transition to adult life, including their

characteristics, programs and services and achievements in multiple domains (*e.g.*, employment, postsecondary education). The study will inform special education policy development and support Government Performance and Results Act (GPRA) measurement and Individuals with Disabilities Education Act (IDEA) reauthorization.

Requests for copies of the proposed information collection request may be accessed from *http://edicsweb.ed.gov*, or should be addressed to Vivian Reese, Department of Education, 400 Maryland Avenue, SW, Room 4050, Regional Office Building 3, Washington, D.C. 20202–4651. Requests may also be electronically mailed to the internet address OCIO_IMG_Issues@ed.gov or faxed to 202–708–9346. Please specify the complete title of the information collection when making your request. Comments regarding burden and/or the collection activity requirements should be directed to Sheila Carey at (202) 708–6287 or via her internet address Sheila_Carey@ed.gov. Individuals who use a telecommunications device for the deaf (TDD) may call the Federal Information Relay Service (FIRS) at 1–800–877–8339.

[FR Doc. 00–24100 Filed 9–19–00; 8:45 am]

BILLING CODE 4000–01–P

DEPARTMENT OF ENERGY

Office of Fossil Energy

[FE Docket No. 00–56–NG, et al.]

Engage Energy US, L.P., et al.; Orders Granting and Vacating Authority To Import and Export Natural Gas, Including Liquefied Natural Gas

AGENCY: Office of Fossil Energy, DOE.

ACTION: Notice of orders.

SUMMARY: The Office of Fossil Energy (FE) of the Department of Energy gives notice that during August 2000, it issued Orders granting and vacating authority to import and export natural gas, including liquefied natural gas (LNG). These Orders are summarized in the attached appendix and may be found on the FE web site at http://www.fe.doe.gov, or on the electronic bulletin board at (202) 586–7853. They are also available for inspection and copying in the Office of Natural Gas & Petroleum Import & Export Activities, Docket Room 3E–033, Forrestal Building, 1000 Independence Avenue, SW., Washington, DC 20585, (202) 586–9478. The docket room is open between the hours of 8:00 a.m. and 4:30 p.m., Monday through Friday, except Federal holidays.

Issued in Washington, D.C., on September 14, 2000.

John W. Glynn,

Manager, Natural Gas Regulation, Office of Natural Gas & Petroleum Import & Export Activities Office of Fossil Energy.

Appendix—Orders Granting and Vacating Import/Export Authorizations

DOE/FE AUTHORITY

Order No.	Date issued	Importer/Exporter FE Docket No.	Import volume	Export volume	Comments
1617	8–03–00	Engage Energy US, L.P., 00–56–NG.	600 Bcf	150 Bcf	Import combined total from Canada and Mexico, and export combined total to Canada and Mexico beginning on July 12, 2000, and extending through July 11, 2002.
1618	8–07–00	Westcoast Gas Services Inc., 00–54–NG.	200 Bcf		Import and export a combined total from and to Canada, over a two-year term beginning on the date of first delivery.
1619	8–07–00	Westcoast Energy (U.S.) Inc., 00–55–NG.	200 Bcf		Import and export a combined total from and to Canada, over a two-year term beginning on the date of first delivery.
1609	8–07–00	Power City Partners, L.P., 00–47–NG.			Errata notice. Ordering Paragraph A inadvertently authorized wrong volumes.
1620	8–10–00	Northern States Power Company (Wisconsin), 00–57–NG.	20 Bcf		Import from Canada, over a two-year term beginning on the date of first delivery.
1621	8–17–00	Applied LNG Technologies USA, L.L.C., 00–59–LNG.		5.2 Bcf	Export LNG to Mexico, over a two-year term beginning on August 19, 2000, and extending through August 18, 2002.
701–A	8–22–00	Distrigas Corporation, 92–93–LNG.			Vacating long-term authority to import LNG from Nigeria.
1505–A	8–24–00	Sunoma Energy Corp., 99–55–NG.			Vacating blanket authority to import from Canada.
1622	8–28–00	Westcoast Gas Services Delaware (America) Inc., 00–58–NG.	1,000 Bcf	1,000 Bcf	Import and export, including LNG from and to Canada, beginning on October 1, 2000, and extending through September 30, 2002.

[FR Doc. 00–24118 Filed 9–19–00; 8:45 am]

BILLING CODE 6450–01–P

DEPARTMENT OF ENERGY

[FE Docket No. PP–229]

Application for Presidential Permit; Tucson Electric Power Company

AGENCY: Office of Fossil Energy, DOE.

ACTION: Notice of Application.

SUMMARY: Tucson Electric Power Company (TEP) has applied for a Presidential permit to construct, connect, operate and maintain a double-circuit, 345,000-volt (345-kV) alternating current electric transmission line across the U.S. border with Mexico.

DATES: Comments, protests, or requests to intervene must be submitted on or before October 20, 2000.

ADDRESSES: Comments, protests, or requests to intervene should be addressed as follows: Office of Coal & Power Import and Export (FE–27), Office of Fossil Energy, U.S. Department of Energy, 1000 Independence Avenue, SW., Washington, DC 20585–0350.

FOR FURTHER INFORMATION CONTACT: Ellen Russell (Program Office) 202–586–9624 or Michael T. Skinker (Program Attorney) 202–586–6667.

SUPPLEMENTARY INFORMATION: The construction, connection, operation, and maintenance of facilities at the international border of the United States for the transmission of electric energy between the United States and a foreign country is prohibited in the absence of a Presidential permit issued pursuant to Executive Order (EO) 10485, as amended by EO 12038.

On August 17, 2000, TEP, a regulated public utility, filed an application with the Office of Fossil Energy (FE) of the Department of Energy (DOE) for a Presidential permit. TEP proposes to construct two 345-kV transmission circuits on a single set of support structures within a 150 to 200 foot right-of-way. Both circuits would originate at TEP's existing South Substation located approximately 15 miles south of Tucson in the vicinity of Sahuarita, Arizona, and 1.4 miles east of Interstate 19, south of Pima Mine Road in Pima County, Arizona. TEP proposes to use these two circuits to interconnect with the Citizens' Utilities system in the vicinity of Nogales, Arizona, by constructing a new substation on the west side of Nogales and ''stepping-down'' the voltage of the circuits from 345-kV to 115-kV. From the new substation, the proposed 345-kV circuits would continue across the U.S.-Mexican border for approximately 60 miles and interconnect with the Comision Federal de Electricidad (CFE; the national electric utility of Mexico) at CFE's Santa Ana Substation. TEP proposes December 2003 as an in-service date for both its transmission interconnection with Citizens Utilities and the interconnection with CFE.

TEP has identified three, 5-mile wide corridors (2½ miles either side of a center line) as possible route alternatives. These corridors are currently identified by TEP as the ''Central Study Corridor,'' the ''Easterly Study Corridor,'' and the ''Westerly Study Corridor.''

The following description of possible routing alternatives have been provided by TEP. The map submitted as an exhibit in the TEP Presidential permit application does not contain this level of detail; however, maps will be prepared by TEP and distributed to the general public before the environmental process associated with this application begins. The distances identified in the descriptions that follow represent distances along the arbitrary centerline of the 5-mile wide study corridors.

The Central Study Corridor leaves South Substation to the south adjacent to an existing 345-kV transmission line and heads west for approximately 1 mile. Continuing to parallel existing transmission, the line then turns south for 1.5 miles before turning west again where it crosses Interstate 19 (I–19), approximately 1 mile north of Sahuarita Road. The study corridor continues west for approximately 2.3 miles where it turns south for 2 miles continuing to parallel existing transmission. At Camino del Toro and Avenue Cinco (west of the community of Sahuarita) the existing 345-kV transmission line and the proposed study corridor turn west for 4.0 miles to a point where the existing transmission line intersects an existing natural gas pipeline. At the pipeline, the study corridor turns south and parallels the natural gas pipeline, for 45.3 miles, extending through the Coronado National Forest, to the west side of Nogales, Arizona, and across the International Border. In this alternative, I–19 is within the 5-mile wide study corridor from approximately one mile south of Arivaca Road to approximately two miles south of the community of Tumacacori. However, the center line of the study corridor remains west of I–19.

The Easterly Study Corridor leaves South substation to the east for approximately 6.0 miles, where it turns south along the Wilmot Road alignment and parallels the existing Citizens Utilities 115-kV transmission line alignment (east of the community of Sahuarita and west of the community of Corona de Tucson), and continues south for another 6.5 miles before reaching the turning point of Citizens Utilities existing 115-kV transmission line alignment. At this point, the proposed corridor continues to parallel the Citizens Utilities 115-kV line southwesterly for approximately 18.4 miles to the vicinity of Amado-Montosa Road. Leaving the 115-kV transmission line alignment, this corridor turns southwesterly for 2.9 miles and crosses I–19 (east to west). At this point the easterly study corridor joins the central study corridor, approximately 1 mile south of Arivaca Road, turns south, and continues along the existing natural gas pipeline corridor through the Coronado National Forest to Nogales and the border.

The Westerly Study Corridor follows the central study corridor from the South Substation to the natural gas pipeline corridor. This corridor then turns south and continues 8.3 miles along the natural gas pipeline corridor to the vicinity of the TEP Cyprus Sierrita Substation, west of Green Valley. At this point, the westerly study corridor turns to the southwest for 4.2 miles, where it then turns due south onto land under the control of the Coronado National Forest for a distance of approximately 19.7 miles paralleling the Pima and Santa Cruz County lines. The County lines are within the study corridor, west of the center line. At this point, within the Forest, the study corridor will traverse a gentle arc, with turning points to be determined by terrain and access to the southeast, until it intersects the existing gas pipeline alignment and the original central study corridor alignment. This is approximately 12.5 miles northwest of the terminus in Nogales and the international border.

Prior to commencing electricity exports to Mexico using these proposed facilities, TEP, or any other electricity exporters, must obtain, from the Department of Energy, an electricity export authorization required by section 202(e) of the Federal Power Act.

Since the restructuring of the electric power industry began, resulting in the introduction of different types of competitive entities into the marketplace, DOE has consistently expressed its policy that cross-border trade in electric energy should be subject to the same principles of comparable open access and non-discrimination that apply to transmission in interstate commerce. DOE has stated that policy in export authorizations granted to entities requesting authority to export over international transmission facilities. Specifically, DOE expects transmitting utilities owning border facilities constructed pursuant to Presidential permits to provide access across the border in accordance with the principles of comparable open access and non-discrimination contained in the FPA and articulated in Federal Energy Regulatory Commission Order No. 888, as amended (Promoting Wholesale Competition Through Open Access Non-Discriminatory Transmission Services by Public Utilities). In furtherance of this policy, DOE intends to condition any Presidential permit issued in this proceeding on compliance with these open access principles.

Procedural Matters

Any person desiring to become a party to this proceeding or to be heard by filing comments or protests to this application should file a petition to intervene, comment or protest at the address provided above in accordance with §§ 385.211 or 385.214 of the FERC's Rules of Practice and Procedures (18 CFR 385.211, 385.214). Fifteen copies of each petition and protest

should be filed with the DOE on or before the date listed above.

Additional copies of such petitions to intervene or protests also should be filed directly with: Ed Beck, Supervisor, Transmission Planning, Tucson Electric Power Company, P. O. Box 711, Tucson, Arizona 85702.

Before a Presidential permit may be issued or amended, the DOE must determine that the proposed action will not adversely impact on the reliability of the U.S. electric power supply system. In addition, DOE must consider the environmental impacts of the proposed action (i.e., granting the Presidential permit, with any conditions and limitations, or denying the permit) pursuant to NEPA. DOE also must obtain the concurrence of the Secretary of State and the Secretary of Defense before taking final action on a Presidential permit application.

The NEPA compliance process is a cooperative, non-adversarial process involving members of the public, state governments and the Federal government. The process affords all persons interested in or potentially affected by the environmental consequences of a proposed action an opportunity to present their views, which will be considered in the preparation of the environmental documentation for the proposed action. Intervening and becoming a party to this proceeding will not create any special status for the petitioner with regard to the NEPA process. Notice of upcoming NEPA activities and information on how the public can participate in those activities will appear in the **Federal Register**. Additional announcements will appear in local newspapers in the vicinity of the proposed transmission line. To apply for the NEPA mailing list now, contact Mrs. Ellen Russell at the address above.

Copies of this application will be made available, upon request, for public inspection and copying at the address provided above. In addition, the application may be reviewed or downloaded from the Fossil Energy Home Page at: http://www.fe.doe.gov. Upon reaching the Fossil Energy Home page, select ''Electricity'' and then ''Pending Proceedings'' from the options menu.

Issued in Washington, DC, on September 13, 2000.

Anthony J. Como,

Deputy Director, Electric Power, Regulation, Office of Coal & Power Im/Ex, Office of Coal & Power Systems, Office of Fossil Energy.

[FR Doc. 00–24119 Filed 9–19–00; 8:45 am]

BILLING CODE 6450–01–P

DEPARTMENT OF ENERGY

Federal Energy Regulatory Commission

[Docket No. CP00–452–000]

Colorado Interstate Gas Company; Notice of Application

September 14, 2000.

Take notice that on September 5, 2000, Colorado Interstate Gas Company (CIG), P.O. Box 1087, Colorado Springs, Colorado 80944, filed in Docket No. CP00–452–000 an application pursuant to Section 7 of the Natural Gas Act (NGA) and the Commission's Rules and Regulations for a certificate of public convenience and necessity authorizing CIG to construct and operate facilities to (i) increase the capacity out of the Raton Basin Area and increase capacity to delivery points east and south of CIG's Campo Regulator Station, and (ii) construct facilities necessary for the treatment requirements relating to gas quality for gas delivered off CIG's Valley Line, all as more fully set forth in the application which is on file with the Commission and open to public inspection. The filing may be viewed at *http://www.ferc.fed.us/online/rims.htm* (call 202–208–2222 for assistance).

CIG proposes to construct and operate facilities necessary to increase its natural gas transmission system capacity out of the Raton Basin Area in Colorado and New Mexico, by 85 MDth per day. In addition, CIG proposes to increase capacity east and south of its Campo Regulator Station to allow Raton Basin shippers to deliver incremental quantities of gas to interconnects with Panhandle Eastern Pipe Line Company, ANR Pipeline Company, Williams Natural Gas Company, and Natural Gas Pipeline Company of America to the east, and El Paso Natural Gas Company, Northern Natural Gas Company, and Transwestern Pipeline Company to the south. To accomplish this, CIG proposes to construct the following:

- The new Trinidad Compressor Station to be located on the western end of CIG's existing Campo Lateral in Las Animas County, Colorado. The compressor station will consist of one turbine driven centrifugal compressor unit nameplate rated at 4,700 horsepower and appurtenant facilities.
- The new Kim Compressor Station to be located at a mid-point along the Campo Lateral in Las Animas County, Colorado. The compressor station will consist of two high speed natural gas engine driven reciprocating compressor units each nameplate rated at 4,450 horsepower.
- Approximately 48 miles of 20-inch diameter pipeline loop from CIG's existing Morton Compressor Station located in Morton County, Kansas to a point referred to as ''Hooker Traps'' in Texas County, Oklahoma.
- A new compressor unit at the existing Keyes Compressor Station located in Cimarron County, Oklahoma. The compressor unit will consist of one high speed natural gas engine driven, reciprocating compressor unit nameplate horsepower rated at 4,450 horsepower.
- Recylindering of the existing Beaver County Compressors located in Beaver County, Oklahoma. The Beaver County Compressor Station is currently equipped with three 1100 nameplate horsepower high speed reciprocating compressor units. Due to the change in operating conditions caused by the 48 miles of 20-inch diameter pipeline loop, the compressor cylinders will be replaced to provide more efficient operation. There will be no change in horsepower of the compressor units.

CIG also proposes, as a separate project, to construct and operate facilities related to gas quality control for quantities of gas delivered off CIG's Valley Line. These facilities consist of the following:

- Approximately 21 miles of 8-inch diameter pipeline look from the Keyes Compressor Station located in Cimarron County, Oklahoma to the Campo Regulator Station located in Baca County, Colorado.
- Miscellaneous blending facilities to be constructed pursuant to 18 CFR § 2.55(a) within the Campo Regulator Station yard consisting of valves, controllers, blending meters and yard piping for blending of gas for delivery on CIG's Valley Line.

CIG avers that the total cost of the proposed facilities for the Raton Basin Area expansion and increased delivery flexibility is $51,784,900 and the cost of the gas quality control facilities is estimated to be $4,507,600. CIG states it conducted an open season which resulted in an additional 85 MDth of long term contracts for the expansion. CIG states that the combination of existing and incremental entitlements represent 100 percent of CIG's capacity out of the Raton Basin Area through the Campo Lateral. CIG proposes rolled-in treatment for the expansion out of the Raton Basin Area and access to additional markets, and proposes to collect the cost of service for the gas quality control facilities through its Gas Quality Control Surcharge pursuant to Article 20 of the General Terms and Conditions of its First Revised Volume No. 1 FERC tariff.

Any questions regarding this application should be directed to James R. West, Manager, Certificates, at (719) 520–4679, Colorado Interstate Gas Company, P.O. Box 1087, Colorado Springs, Colorado 80944.

Any person desiring to be heard or to protest with reference to said application should on or before October 5, 2000, file with the Federal Energy Regulatory Commission (Commission), 888 First Street, NE, Washington, DC 20426, a motion to intervene or protest in accordance with the requirements of the Commission's Rules of Practice and procedure (18 CFR 385.211 and 385.214) and the regulations under the Natural Gas Act (NGA) (18 CFR 157.10). All protests filed with the Commission will be considered by it in determining the appropriate action to be taken but will not serve to make the protestants parties to the proceeding. Any person wishing to become a party in any proceeding must file a motion to intervene in accordance with the Commission's rules.

A person obtaining intervenor status will be placed on the service list maintained by the Secretary of the Commission and will receive copies of all documents issued by the Commission, filed by the applicant, or filed by all other intervenors. An intervenor can file for rehearing of any Commission order and can petition for court review of any such order. However, an intervenor must serve copies of comments or any other filing it makes with the Commission to every other intervenor in the proceeding, as well as filing an original and 14 copies with the Commission.

A person does not have to intervene, however, in order to have comments considered, a person, instead, may submit two copies of such comments to the Secretary of the Commission. Commenters will be placed on the Commission's environmental mailing list, will receive copies of environmental documents, and will be able to participate in meetings associated with the Commission's environmental review process. Commenters will not be required to serve copies of filed documents on all other parties. However, Commenters will not receive copies of all documents filed by other parties or issued by the Commission, and will not have the right to seek rehearing or appeal the Commission's final order to a Federal court.

The Commission will consider all comments and concerns equally, whether filed by Commenters or those requesting intervenor status.

Take further notice that, pursuant to the authority contained in and subject to the jurisdiction conferred upon the Commission by Section 7 and 15 of the NGA and Commission's Rules of Practice and Procedure, a hearing will be held without further notice before the Commission or its designee on this application if no motion to intervene is filed within the time required herein, if the Commission on its own review of the matter finds that a grant of the certificate is required by the public convenience and necessity. If a motion for leave to intervene is timely filed, or if the Commission on its own motion believes that a formal hearing is required, further notice of such hearing will be duly given.

Under the procedure herein provided for, unless otherwise advised, it will be unnecessary for CIG to appear or be represented at the hearing.

Linwood A. Watson, Jr.,

Acting Secretary.

[FR Doc. 00–24093 Filed 9–19–00; 8:45 am]

BILLING CODE 6717–01–M

DEPARTMENT OF ENERGY

Federal Energy Regulatory Commission

[Docket No. RP00–325–000]

Colorado Interstate Gas Company; Notice of Technical Conference

September 14, 2000.

On June 15, 2000, Colorado Interstate Gas Company (CIG) filed in compliance with Order No. 637. Several parties have protested various aspects of CIG's filing.

Take notice that a technical conference to discuss the various issues raised by CIG's filing will be held on Tuesday, October 3, 2000, at 10 a.m., in a room to be designated at the Offices of the Federal Energy Regulatory Commission, 888 First Street, NE., Washington, DC 20426. This technical conference may extend to Wednesday, October 4, 2000.

Among the major areas to be addressed is CIG's segmentation proposal. Therefore CIG should provide current maps of its system and be prepared to discuss its system's operations. Parties protesting aspects of CIG's filing are invited to present alternative proposals.

All interested persons and Staff are permitted to attend.

Linwood A. Watson, Jr.,

Acting Secretary.

[FR Doc. 00–24097 Filed 9–19–00; 8:45 am]

BILLING CODE 6717–01–M

DEPARTMENT OF ENERGY

Federal Energy Regulatory Commission

[Project No. 2724–023]

City of Hamilton, OH; Notice of Meeting

September 14, 2000.

A meeting will be convened by staff of the Office of Energy Projects on October 3, 2000, at 3 p.m. at the Federal Energy Regulatory Commission, located at 888 First Street, NE., Washington, DC. The purpose of this meeting is to discuss staff's August 11, 2000, additional information request on the relicense application for the City of Hamilton, Ohio Hydroelectric Project.

Any person wishing to attend or needing additional information should contact Nicholas Jayjack at (202) 219–2825 or e-mail at nicholas.jayjack@ferc.fed.us. Please notify Mr. Jayjack by September 27, 2000, if you plan to attend.

Linwood A. Watson, Jr.,

Acting Secretary.

[FR Doc. 00–24094 Filed 9–19–00; 8:45 am]

BILLING CODE 6717–01–M

DEPARTMENT OF ENERGY

[Docket No. CP00–406–000]

Northern Natural Gas Company; Notice of Application

September 14, 2000

Take notice that on July 17, 2000, Northern Natural Gas Company (Northern), 111 South 103rd Street, Omaha, Nebraska 68124–1000, filed in Docket No. CP00–406–000 an application pursuant to Section 7(b) of the Natural Gas Act (NGA), as amended, and the Rules and Regulation of the Federal Energy Regulatory Commission (Commission) for permission and approval to abandon natural gas service to Southern Union Gas Company (Southern Union), which service was rendered under Northern's Rate Schedule X–12 of its FERC Gas Tariff, Original Volume No. 2, all as more fully set forth in the application which is on file with the Commission, and open to public inspection. This filing may be view on the web at http://www.ferc.fed/us/online/rims/htm (call 202–208–222 for assistance).

Northern proposes to abandon the service it is now authorized to rendered to Southern Union under Rate Schedule X–12. Northern indicates that no service has been provided under the underlying contract for this service for several years. Consequently, Northern proposes

to abandon the service and remove Rate Schedule X–12 from its FERC Gas Tariff, Original Volume No. 2. Northern asserts that no facilities will be abandoned as a result of the proposed abandonment of service.

Any person desiring to be heard or make any protest with reference to said application should on or before October 5, 2000, file with the Commission 888 First Street, NE., Washington, DC 20426, a motion to intervene or a protest in accordance with the requirements of the Commission's Rules of Practice and Procedures (19 CFR Sections 385.211 and 385.214) and the Regulations under the Natural Gas Act (18 CFR Section 157.10). All protests filed with the Commission will be considered by it in determining the appropriate action to be taken but will not serve to make the Protestants parties to the proceedings. Any person wishing to become a party to a proceeding or to participate as a party in any hearing therein must file a petition in accordance with the Commission's Rules.

Take notice that, pursuant to the authority contained in and subject to the jurisdiction conferred upon the Commission by Sections 7 and 15 of the Natural Gas Act and the Commission's Rules of Practice and Procedure, a hearing will be held without further notice before the Commission on this application if no protest or motion to intervene is filed within the time required herein. At that time, the Commission, on its own review of the matter, will determine whether granting the abandonment is required by the public convenience and necessity. If a petition for leave to intervene is timely filed, or if the Commission on its own motion believes that a formal hearing is required, further notice of such hearing will be duly given.

Under the procedure herein provided for, unless otherwise advise, it will be unnecessary for Northern to appear or be represented at the hearing.

Linwood A. Watson, Jr.,

Acting Secretary.

[FR Doc. 00–24090 Filed 9–19–00; 8:45 am]

BILLING CODE 6717–01–M

DEPARTMENT OF ENERGY

Federal Energy Regulatory Commission

[Docket No. CP00–433–000]

Northern Natural Gas Company; Notice of Application

September 14, 2000.

Take notice that on August 9, 2000, Northern Natural Gas Company (Northern), 1111 South 103rd Street, Omaha, Nebraska 68124–1000, filed in Docket No. CP00–433–000 an application pursuant to Section 7(b) of the Natural Gas Act (NGA), as amended, and the Rules and Regulations of the Federal Energy Regulatory Commission (Commission) for permission and approval to abandon natural gas service of MidAM, formerly Iowa Public Service Company, which service was rendered under Northern's Rate Schedule T–44 of its FERC Gas Tariff, Original Volume No. 2, all as more fully set forth in the application which is on file with the Commission, and open to public inspection. This filing may be viewed on the web at *htpp://www.ferc.fed/us/online/rims/htm* (call 202–208–2222 for assistance).

Northern proposes to abandon service to MidAm, as agent on behalf of Terra Chemicals International, Inc., under Rate Schedule T–44. Northern indicates that the underlying contract for the service has expired pursuant to the terms of the agreement. Consequently, Northern proposes to abandon the service and remove Rate Schedule T–44 from its FERC Gas Tarif, Original Volume No. 2. Northern asserts that no facilities will be abandoned as a result of the proposed abandonment of service.

Any person desiring to be heard or make any protest with reference to said application should on or before October 5, 2000, file with the Commission 888 First Street, NE., Washington, DC 20426, a motion to intervene or a protest in accordance with the requirements of the Commission's Rules of Practice and Procedures (19 CFR sections 385.211 and 385.214) and the Regulations under the Natural Gas Act (18 CFR section 157.10). All protests filed with the Commission will be considered by it in determining the appropriate action to be taken but will not serve to make the Protestants parties to the proceedings. Any person wishing to become a party to a proceeding or to participate as a party in any hearing therein must file a petition in accordance with the Commission's Rules.

Take notice that, pursuant to the authority contained in and subject to the jurisdiction conferred upon the Commission by Sections 7 and 15 of the Natural Gas Act and the Commission's Rules of Practice and Procedure, a hearing will be held without further notice before the Commission on this application if no protest or motion to intervene is filed within the time required herein. At that time, the Commission, on its own review of the matter, will determine whether granting the abandonment is required by the public convenience and necessity. If a petition for leave to intervene is timely filed, or if the Commission on its own motion believes that a formal hearing is required, further notice of such hearing will be duly given.

Under the procedure herein provided for, unless otherwise advise, it will be unnecessary for Northern to appear or be represented at the hearing.

Linwood A. Watson, Jr.,

Acting Secretary.

[FR Doc. 00–24092 Filed 9–19–00; 8:45 am]

BILLING CODE 6717–01–M

DEPARTMENT OF ENERGY

Federal Energy Regulatory Commission

[Docket No. EC00–99–001, et al.]

Public Service Company of New Mexico, et al.; Electric Rate and Corporate Regulation Filings

September 13, 2000.

Take notice that the following filings have been made with the Commission:

1. Public Service Company of New Mexico

[Docket No. EC00–99–001]

Take notice that on September 8, 2000, Public Service Company of New Mexico (P.M.) filed a supplement to its June 7, 2000 application under section 203 of the Federal Power Act concerning P.M.'s corporate restructuring to implement retail competition in New Mexico. P.M.'s supplement consists of a full and complete version of Exhibit H, the transaction documents required to effect its restructuring, and an explanation of a revision to the structure of the transaction, which P.M. claims would have an outcome identical to the original application. P.M. also filed a supplemental Attachment B to its original Application.

Comment date: September 29, 2000, in accordance with Standard Paragraph E at the end of this notice.

2. Southern California Edison Company, Nevada Power Company, and AES Mohave, LLC

[Docket No. EC00–132–000]

Take notice that on August 31, 2000, Southern California Edison Company (Edison), Nevada Power Company (Nevada Power) and AES Mohave, LLC tendered for filing an application under section 203 of the Federal Power Act for approval of the transfer of certain jurisdictional facilities in connection with the sale of Edison's and Nevada Power's interests in the Mohave generating station.

Comment date: October 2, 2000, in accordance with Standard Paragraph E at the end of this notice.

3. Monongahela Power Company, Allegheny Energy Supply Company, LLC, MP Transferring Agent, LLC, and MP Genco, LLC

[Docket No. EC00–135–000]

Take notice that on September 8, 2000, Monongahela Power Company (Monongahela), Allegheny Energy Supply Company, LLC (AE Supply), MP Transferring Agent, LLC, and MP Genco, LLC, filed a Joint Application Under Section 203 Of The Federal Power Act For The Disposition Of Jurisdictional Facilities. The application requests Commission authorization to permit Monongahela to transfer the following jurisdictional assets to AE Supply in connection with a corporate reorganization: (1) the shares of jurisdictional step-up transformers allocable to Monongahela's West Virginia and Ohio service areas; (2) securities evidencing Monongahela's ownership share of Allegheny Generating Company; (3) certain wholesale power purchase and supply agreements, including those jurisdictional agreements Monongahela may enter into between the date of the application and the date of the proposed corporate reorganization; and (4) Monongahela's pollution control and solid waste bonds associated with the transferred generating assets.

Comment date: September 29, 2000, in accordance with Standard Paragraph E at the end of this notice.

4. Madison Gas & Electric Company, Wisconsin Public Service Corp., American Transmission Company LLC

[Docket No. EC00–136–000]

Take notice that on September 8, 2000, Madison Gas & Electric Company and Wisconsin Public Service Corp. filed an application under Section 203 of the Federal Power Act for Commission authorization to transfer operational control and ownership of their transmission facilities to the American Transmission Company LLC. The proposed disposition is being made pursuant to Wisconsin's electric restructuring legislation.

Comment date: September 29, 2000, in accordance with Standard Paragraph E at the end of this notice.

5. Southwest Power Pool, Inc.

[Docket No. ER00–3293–000]

Take notice that on September 8, 2000, Southwest Power Pool, Inc. filed a Motion to Withdraw Unexecuted Service Agreements thereby amending its July 31, 2000 filing in the above-captioned proceeding, pursuant to Rule 215 of the Federal Energy Regulatory Commission's (Commission) Rules of Practice and Procedure, 18 CFR 285.215.

Comment date: September 29, 2000, in accordance with Standard Paragraph E at the end of this notice.

6. Commonwealth Edison Company

[Docket No. ER00–2946–001]

Take notice that on September 11, 2000, Commonwealth Edison Company (ComEd), tendered for filing an unexecuted Interconnection Agreement with Rocky Road Power, LLC (Rocky Road) in compliance with the Commission's August 25, 2000 ''Order Conditionally Accepting for Filing Unexecuted Interconnection Agreement,'' 92 FERC ¶ 61,175 (Order).

ComEd requests an effective date of June 27, 2000 in accordance with the Order. Copies of the filing were served on Rocky Road, the Illinois Commerce Commission and the official service list in Docket No. ER00–2946–000.

Comment date: October 2, 2000, in accordance with Standard Paragraph E at the end of this notice.

7. The Potomac Edison Company, PE Transferring Agent, L.L.C., PE Generating Company, L.L.C., Allegheny Energy Supply Company, L.L.C.

[Docket No. ER00–3373–001]

Take notice that on September 7, 2000, The Potomac Edison Company, PE Transferring Agent, L.L.C., PE Generating Company, L.L.C., and Allegheny Energy Supply Company, L.L.C., tendered for filing a supplement to the Assignment of Inter-Company Power Agreement filed with the Commission on August 7, 2000, in the above-referenced Docket.

Comment date: September 28, 2000, in accordance with Standard Paragraph E at the end of this notice.

8. Allegheny Energy Service Corporation on behalf of Allegheny Energy Supply Company, LLC

[Docket No. ER00–3615–000]

Take notice that on September 11, 2000, Allegheny Energy Service Corporation on behalf of Allegheny Energy Supply Company, LLC (Allegheny Energy Supply), tendered for filing Service Agreement No. 93 to add one (1) new Customer to the Market Rate Tariff under which Allegheny Energy Supply offers generation services.

Allegheny Energy Supply requests a waiver of notice requirements to make service available as of September 8, 2000 to the Borough of Summerhill.

Copies of the filing have been provided to the Public Utilities Commission of Ohio, the Pennsylvania Public Utility Commission, the Maryland Public Service Commission, the Virginia State Corporation Commission, the West Virginia Public Service Commission, and all parties of record.

Comment date: October 2, 2000, in accordance with Standard Paragraph E at the end of this notice.

9. Allegheny Energy Service Corporation on behalf of Allegheny Energy Supply Company, LLC

[Docket No. ER00–3616–000]

Take notice that on September 11, 2000, Allegheny Energy Service Corporation on behalf of Allegheny Energy Supply Company, LLC (Allegheny Energy Supply), tendered for filing Service Agreement No. 94 to add one (1) new Customer to the Market Rate Tariff under which Allegheny Energy Supply offers generation services.

Allegheny Energy Supply requests a waiver of notice requirements to make service available as of September 8, 2000 to Public Service Company of Colorado.

Copies of the filing have been provided to the Public Utilities Commission of Ohio, the Pennsylvania Public Utility Commission, the Maryland Public Service Commission, the Virginia State Corporation Commission, the West Virginia Public Service Commission, and all parties of record.

Comment date: October 2, 2000, in accordance with Standard Paragraph E at the end of this notice.

10. Allegheny Energy Service Corporation, on behalf of Allegheny Energy Supply Company, LLC (AE Supply)

[Docket No. ER00–3617–000]

Take notice that on September 11, 2000, Allegheny Energy Service Corporation on behalf of Allegheny Energy Supply Company, LLC (AE Supply), tendered for filing a Service Agreement with Monongahela Power Company, The Potomac Edison Company, and West Penn Power Company, d/b/a Allegheny Power, in order for Allegheny Power to purchase power to meet its obligations to supply emergency service under the terms of an operating agreement with Virginia Electric and Power Company.

AE Supply has requested a waiver of notice to make the Service Agreement effective on August 22, 2000.

Copies of the filing have been provided to the customer and to the Maryland Public Service Commission, the Public Utilities Commission of Ohio, the Pennsylvania Public Utility Commission, the Virginia State Corporation Commission, and the West Virginia Public Service Commission.

Comment date: October 2, 2000, in accordance with Standard Paragraph E at the end of this notice.

11. MidAmerican Energy Company

[Docket No. ER00–3618–000]

Take notice that on September 11, 2000, MidAmerican Energy Company (MidAmerican), 666 Grand Avenue, Des Moines, Iowa 50309, filed with the Commission four (4) Firm Transmission Service Agreement entered into by MidAmerican, as transmission provider, and MidAmerican, as wholesale merchant. Each Agreement is dated September 1, 2000 and has been entered into pursuant to MidAmerican's Open Access Transmission Tariff.

MidAmerican requests an effective date of November 1, 2000, for each Agreement and seeks a waiver of the Commission's notice requirement. MidAmerican has served a copy of the filing on the Iowa Utilities Board, the Illinois Commerce Commission and the South Dakota Public Utilities Commission.

Comment date: October 2, 2000, in accordance with Standard Paragraph E at the end of this notice.

12. Dominion Nuclear Marketing II, INC.

[Docket No. ER00–3619–000]

Take notice that on September 11, 2000, Dominion Nuclear Marketing II, Inc., tendered for filing its proposed FERC Electric Market-Based Sales Tariff and requested certain waivers of the Commission's regulations.

Comment date: October 2, 2000, in accordance with Standard Paragraph E at the end of this notice.

13. Dominion Nuclear Marketing I, INC.

[Docket No. ER00–3620–000]

Take notice that on September 11, 2000, Dominion Nuclear Marketing I, Inc., tendered for filing its proposed FERC Electric Market-Based Sales Tariff and certain waivers of the Commission's Regulations.

Comment date: October 2, 2000, in accordance with Standard Paragraph E at the end of this notice.

14. Dominion Nuclear Connecticut, Inc.

[Docket No. ER00–3621–000]

Take notice that on September 11, 2000, Dominion Nuclear Connecticut, Inc., tendered for filing its proposed FERC Market-Based Sales Tariff and requested certain waivers of the Commission's Regulations.

Comment date: October 2, 2000, in accordance with Standard Paragraph E at the end of this notice.

15. Rochester Gas and Electric Corporation

[Docket No. ER00–3622–000]

Take notice that on September 11, 2000, Rochester Gas and Electric Corporation (RG&E), tendered for filing a Market Based Service Agreement between RG&E and AES Eastern Energy, L.P. (Customer). This Service Agreement specifies that the Customer has agreed to the rates, term and conditions of RG&E's FERC Electric Rate Schedule, Original Volume No. 3 (Power Sales Tariff) accepted by the Commission (80 FERC ¶ 61,284) (1997)).

RG&E requests waiver of the Commission's sixty (60) day notice requirements and an effective date of August 28, 2000, Virginia Power Service Agreement.

RG&E has served copies of the filing on the New York State Public Service Commission and on the Customer.

Comment date: October 2, 2000, in accordance with Standard Paragraph E at the end of this notice.

16. Ameren Services Company

[Docket No. ER00–3623–000]

Take notice that on September 11, 2000, Ameren Services Company (Ameren), tendered for filing a copy of its Open Access Transmission Tariff of the Ameren Operating Companies (OATT) reformatted to conform with Order No. 614 but with no changes to the currently effective text. Ameren also filed four revised tariff sheets to make minor corrections to the current tariff.

Ameren seeks an effective date of September 12, 2000, for the reformatted, but textually unchanged, OATT and an effective date of September 13, 2000 for the four revised tariff sheets. Accordingly, Ameren seeks waiver of the Commission's notice requirements. Copies of the filing have been served on all parties to Ameren's two most recent OATT proceedings and on the Missouri Public Service Commission and the Illinois Commerce Commission.

Comment date: October 2, 2000, in accordance with Standard Paragraph E at the end of this notice.

17. PECO Energy Company

[Docket No. ER00–3635–000]

Take notice that on September 11, 2000, PECO Energy Company (PECO), tendered for filing the following Agreements between PECO and Liberty Electric Power, L.L.C. (Liberty) (a) an Interconnection Agreement, designated as Service Agreement 496 under PJM Interconnection L.L.C.'s FERC Electric Tariff Third Revised Volume No. 1, to be effective on the initial operation date, and (b) a Construction Agreement, designated as PECO's Rate Schedule FERC No. 139, to be effective on 13 September 2000.

Copies of this filing were served on Liberty, PJM and the Pennsylvania Public Utility Commission.

Comment date: October 2, 2000, in accordance with Standard Paragraph E at the end of this notice.

18. California Independent System Operator Corporation

[Docket No. ER00–3636–000]

Take notice that on September 11, 2000, the California Independent System Operator Corporation (ISO), tendered for filing a proposed amendment (Amendment No. 30) to the ISO Tariff. Amendment No. 30 would, in compliance with the Commission's Order in San Diego Gas & Electric Company, *et al.*, (92 FERC ¶ 61,172 (2000)), make certain changes to the ISO Tariff to permit the ISO to engage in limited forward contracting and to allocate the costs for those contracts to Scheduling Coordinators whose forward schedules do not reflect their actual real-time Demands.

The ISO asks for waiver of Section 35.3 of the Commission's Regulations to permit Amendment No. 30 to become effective upon its filing.

The ISO states that this filing has been served upon the Public Utilities Commission of California, the California Energy Commission, the California

Electricity Oversight Board, and all parties with effective Scheduling Coordinator Agreements under the ISO Tariff.

Comment date: October 2, 2000, in accordance with Standard Paragraph E at the end of this notice.

19. New York Independent System Operator, Inc.

[Docket No. ER00–3638–000]

Take notice that on September 11, 2000, the New York Independent System Operator, Inc. (NYISO), on behalf of itself and the NEPOOL Participants, tendered for filing an Emergency Energy Transactions Agreement between it and the ISO New England, Inc., as agent for the NEPOOL Participants, pursuant to which either party may purchase emergency energy together with a Certificate of Concurrence executed by the NEPOOL Participants. The NYISO also filed a Notice of Cancellation of the Interconnection Agreement between the New England Power Pool and the New York Power Pool, dated April 4, 1977, as amended.

The parties request an effective date of August 14, 2000 and waiver of the Commission's notice requirements.

A copy of this filing was served upon the Parties to the New York Independent System Operator Agreement, the NEPOOL Participants, ISO New England, Inc. and upon the electric utility regulatory agencies in New York, New Jersey, Pennsylvania, Connecticut, Maine, Massachusetts, New Hampshire, Rhode Island and Vermont.

Comment date: October 2, 2000, in accordance with Standard Paragraph E at the end of this notice.

Standard Paragraphs

E. Any person desiring to be heard or to protest such filing should file a motion to intervene or protest with the Federal Energy Regulatory Commission, 888 First Street, NE., Washington, DC 20426, in accordance with Rules 211 and 214 of the Commission's Rules of Practice and Procedure (18 CFR 385.211 and 385.214). All such motions or protests should be filed on or before the comment date. Protests will be considered by the Commission in determining the appropriate action to be taken, but will not serve to make protestants parties to the proceeding. Any person wishing to become a party must file a motion to intervene. Copies of these filings are on file with the Commission and are available for public inspection. This filing may also be viewed on the Internet at http://www.ferc.fed.us/ online/rims.htm (call 202–208–2222 for assistance).

David P. Boergers,

Secretary.

[FR Doc. 00–24088 Filed 9–19–00; 8:45 am]

BILLING CODE 6717–01–P

DEPARTMENT OF ENERGY

Federal Energy Regulatory Commission

[Docket No. EF00–4021–000, et al.]

Southwestern Power Administration, et al.; Electric Rate and Corporate Regulation Filings

September 12, 2000.

Take notice that the following filings have been made with the Commission:

1. Southwestern Power Administration

[Docket No. EF00–4021–000]

Take notice that on September 7, 2000, The Deputy Secretary of Energy filed a Department of Energy Rate Order No. SWPA–42 for information. This order temporarily extends the existing Sam Rayburn Dam Project rate on an interim basis for a period of one year beginning October 1, 2000. The temporary extension is made pursuant to 10 CFR 903.22(h) and 903.23(a)(3).

Comment date: October 3, 2000, in accordance with Standard Paragraph E at the end of this notice.

2. GenPower Kelly, LLC

[Docket No. EG00–254–000]

Take notice that on September 8, 2000, GenPower Kelly, LLC (Applicant), a Delaware limited liability company, whose address is 1040 Great Plain Avenue, Needham, MA, filed with the Federal Energy Regulatory Commission an application for determination of exempt wholesale generator status pursuant to Part 365 of the Commission's regulations.

Applicant intends to construct an approximate 1,086 MW natural gas-fired combined cycle independent power production facility in Walker County, Alabama (the Facility). The Facility is currently under development and will be owned by Applicant. Electric energy produced by the Facility will be sold by Applicant to the wholesale power market in the southern United States.

Comment date: October 3, 2000, in accordance with Standard Paragraph E at the end of this notice. The Commission will limit its consideration of comments to those that concern the adequacy or accuracy of the application.

3. PSI Energy, Inc.

[Docket No. ER00–3608–000]

Take notice that on September 8, 2000, PSI Energy, Inc. (PSI), tendered for filing the Transmission and Local Facilities (T&LF) Agreement Calendar Year 1999 Reconciliation between PSI and Wabash Valley Power Association, Inc. (WVPA), and between PSI and Indiana Municipal Power Agency (IMPA). The T&LF Agreement has been designated as PSI's Rate Schedule FERC No. 253.

Copies of the filing were served on Wabash Valley Power Association, Inc., the Indiana Municipal Power Agency and the Indiana Utility Regulatory Commission.

Comment date: September 29, 2000, in accordance with Standard Paragraph E at the end of this notice.

4. New England Power Pool

[Docket No. ER00–3609–000]

Take notice that on September 8, 2000, the New England Power Pool (NEPOOL) Participants Committee submitted changes to Market Rules 2 and 3 which allow for the short notice Self-Scheduling of pumping at pumped storage hydroelectric generating units.

A November 8, 2000 effective date has been requested.

The NEPOOL Participants Committee states that copies of these materials were sent to the New England state governors and regulatory commissions and the Participants in the New England Power Pool.

Comment date: September 29, 2000, in accordance with Standard Paragraph E at the end of this notice.

5. Entergy Services, Inc.

[Docket No. ER00–3610–000]

Take notice that on September 8, 2000, Entergy Services, Inc. (Entergy), on behalf of Entergy Arkansas, Inc., Entergy Gulf States, Inc., Entergy Louisiana, Inc., Entergy Mississippi, Inc., and Entergy New Orleans, Inc. (collectively, the Entergy Operating Companies), submitted for filing an amended Exhibit A to the Network Integration Transmission Service Agreement (NITSA) between Entergy, as agent for the Entergy Operating Companies, and East Texas Electric Cooperative, Inc. (ETEC), Sam Rayburn G&T Electric Cooperative, Inc. (SRG&T), and Tex-La Electric Cooperative of Texas, Inc. (Tex-La). Entergy states that the amended Exhibit A reflects changes to certain points of delivery for Sam Houston Electric Cooperative, Inc.

Comment date: September 29, 2000, in accordance with Standard Paragraph E at the end of this notice.

6. Allegheny Energy Service Corporation, on behalf of Monongahela Power Company, The Potomac Edison Company, and West Penn Power Company (Allegheny Power).

[Docket No. ER00–3611–000]

Take notice that on September 8, 2000, Allegheny Energy Service Corporation on behalf of Monongahela Power Company, The Potomac Edison Company and West Penn Power Company (Allegheny Power), filed Service Agreement Nos. 325 and 326 to add Alliance Energy Services Partnership to Allegheny Power's Open Access Transmission Service Tariff which has been accepted for filing by the Federal Energy Regulatory Commission in Docket No. ER96–58–000.

The proposed effective date under the Service Agreements is September 7, 2000 or a date ordered by the Commission.

Copies of the filing have been provided to the Public Utilities Commission of Ohio, the Pennsylvania Public Utility Commission, the Maryland Public Service Commission, the Virginia State Corporation Commission, and the West Virginia Public Service Commission.

Comment date: September 29, 2000, in accordance with Standard Paragraph E at the end of this notice.

7. Commonwealth Edison Company

[Docket No. ER00–3612–000]

Take notice that on September 8, 2000, Commonwealth Edison Company (ComEd) tendered for filing pursuant to Section 35.15 of the Federal Energy Regulatory Commission's regulations, 18 CFR 35.15, Notices of Cancellation of Service Agreement Nos. 138 and 84 between ComEd and Columbia Energy Power Marketing Corp. (Columbia) under ComEd's Power Sales and Reassignment of Transmission Rights Tariff and FERC Electric Market-Based Rate Schedule, respectively.

ComEd requests an effective date of August 1, 2000 for the cancellations and accordingly requests waiver of the Commission's regulations.

A copy of this filing was served on Columbia.

Comment date: September 29, 2000, in accordance with Standard Paragraph E at the end of this notice.

8. Commonwealth Edison Company

[Docket No. ER00–3613–000]

Take notice that on September 8, 2000, Commonwealth Edison Company (ComEd) tendered for filing pursuant to Section 35.15 of the Federal Energy Regulatory Commission's regulations, 18 CFR 35.15, Notices of Cancellation of Service Agreement Nos. 100 and 31 between ComEd and AYP Energy, Inc. (AYP) under ComEd's Power Sales and Reassignment of Transmission Rights Tariff and FERC Electric Market-Based Rate Schedule, respectively.

ComEd requests an effective date of November 8, 2000 for the cancellations.

A copy of this filing was served on AYP.

Comment date: September 29, 2000, in accordance with Standard Paragraph E at the end of this notice.

Standard Paragraphs

E. Any person desiring to be heard or to protest such filing should file a motion to intervene or protest with the Federal Energy Regulatory Commission, 888 First Street, N.E., Washington, D.C. 20426, in accordance with Rules 211 and 214 of the Commission's Rules of Practice and Procedure (18 CFR 385.211 and 385.214). All such motions or protests should be filed on or before the comment date. Protests will be considered by the Commission in determining the appropriate action to be taken, but will not serve to make protestants parties to the proceeding. Any person wishing to become a party must file a motion to intervene. Copies of these filings are on file with the Commission and are available for public inspection. This filing may also be viewed on the Internet at http://www.ferc.fed.us/ online/rims.htm (call 202–208–2222 for assistance).

David P. Boergers,

Secretary.

[FR Doc. 00–24089 Filed 9–19–00; 8:45 am]

BILLING CODE 6717–01–P

DEPARTMENT OF ENERGY

Federal Energy Regulatory Commission

[Docket No. CP00–412–000]

Cross Bay Pipeline Company, L.L.C. and Transcontinental Gas Pipe Line Corporation; Notice of Intent To Prepare an Environmental Assessment for the Proposed Cross Bay Project and Request for Comments on Environmental Issues

September 14, 2000.

The staff of the Federal Energy Regulatory Commission (FERC or Commission) will prepare an environmental assessment (EA) that will discuss the environmental impacts of the Cross Bay Project involving the transfer, construction and operation of facilities by Cross Bay Pipeline Company, L.L.C. (Cross Bay) and Transcontinental Gas Pipe Line Corporation (Transco) in Middlesex and Monmouth Counties, New Jersey and Queens and Nassau Counties, New York.[1] These facilities would consist of about 37 miles of pipeline, a meter and regulator station, and 16,000 horsepower (hp) of compression. This EA will be used by the Commission in its decision-making process to determine whether the project is in the public convenience and necessity.

If you are a landowner receiving this notice, you may be contacted by a pipeline company representative about the acquisition of an easement to construct, operate, and maintain the proposed facilities. The pipeline company would seek to negotiate a mutually acceptable agreement. However, if the project is approved by the Commission, that approval conveys with it the right of eminent domain. Therefore, if easement negotiations fail to produce an agreement, the pipeline company could initiate condemnation proceedings in accordance with state law.

A fact sheet prepared by the FERC entitled ''An Interstate Natural Gas Facility On My Land? What Do I Need To Know?'' was attached to the project notice Cross Bay provided to landowners. This fact sheet addresses a number of typically asked questions, including the use of eminent domain and how to participate in the Commission's proceedings. It is available for viewing on the FERC Internet website (www.ferc.fed.us).

Summary of the Proposed Project

Cross Bay proposes to expand the capacity of facilities in New Jersey and New York to transport an additional 125,000 dekatherms per day of natural gas to KeySpan Energy Delivery New York and KeySpan Energy Delivery Long Island. Cross Bay proposes to:

- Acquire, hydrostatic test, and replace sections of 3.27 miles of Transco's 42-inch-diameter Cross Bay Extension in Middlesex County, New Jersey;
- Acquire and uprate by hydrostatic testing 33.66 miles of Transco's 26-inch-diameter Cross Bay Extension crossing Middlesex and Monmouth Counties, New Jersey and Queens and Nassau Counties, New York;
- Acquire Transco's Morgan and Long Beach Meter Stations in Middlesex County, New Jersey and Nassau County, New York, respectively; and

[1] Cross Bay's application was filed with the Commission under Section 7 of the Natural Gas Act and Part 157 of the Commission's regulations.

• Construct and operate a 16,000-horsepower Cross Bay Compressor Station and Cross Bay Meter Station at the same location in Middlesex County, New Jersey.

The applicants also request the abandonment of Transco's pipeline facilities by transfer to Cross Bay. The location of the project facilities is shown in appendix 1.[2]

Land Requirements for Construction

Construction of the proposed facilities would require about 49.9 acres of land. Following construction, about 11.5 acres would be maintained as new aboveground facility sites. The remaining 38.4 acres of land would be restored and allowed to revert to its former use.

The EA Process

The National Environmental Policy Act (NEPA) requires the Commission to take into account the environmental impacts that could result from an action whenever it considers the issuance of a Certificate of Public Convenience and Necessity. NEPA also requires us to discover and address concerns the public may have about proposals. We[3] call this ''scoping.'' The main goal of the scoping process is to focus the analysis in the EA on the important environmental issues. By this Notice of Intent, the Commission requests public comments on the scope of the issues it will address in the EA. All comments received are considered during the preparation of the EA. State and local government representatives are encouraged to notify their constituents of this proposed action and encourage them to comment on their areas of concern.

The EA will discuss impacts that could occur as a result of the construction and operation of the proposed project under these general headings:

• Geology and soils
• Water resources, fisheries, and wetlands
• Vegetation and wildlife
• Endangered and threatened species
• Land use
• Cultural resources
• Air quality and noise
• Public safety

We will also evaluate possible alternatives to the proposed project or portions of the project, and make recommendations on how to lessen or avoid impacts on the various resource areas.

Our independent analysis of the issues will be in the EA. Depending on the comments received during the scoping process, the EA may be published and mailed to Federal, state, and local agencies, public interest groups, interested individuals, affected landowners, newspapers, libraries, and the Commission's official service list for this proceeding. A comment period will be allotted for review if the EA is published. We will consider all comments on the EA before we make our recommendations to the Commission.

To ensure your comments are considered, please carefully follow the instructions in the public participation section below.

Public Participation

You can make a difference by providing us with your specific comments or concerns about the project. By becoming a commentor, your concerns will be addressed in the EA and considered by the Commission. You should focus on the potential environmental effects of the proposal, alternatives to the proposal (including alternative locations), and measures to avoid or lessen environmental impact. The more specific your comments, the more useful they will be. Please carefully follow these instructions to ensure that your comments are received in time and properly recorded:

• Send two copies of your letter to: David P. Boergers, Secretary, Federal Energy Regulatory Commission, 888 First St., N.E., Room 1A, Washington, DC 20426.
• Label one copy of the comments for the attention of Gas 1.
• Reference Docket No. CP00–412–000.
• Mail your comments so that they will be received in Washington, DC on or before October 16, 2000.

Becoming an Intervenor

In addition to involvement in the EA scoping process, you may want to become an official party to the proceeding known as an ''intervenor''. Intervenors play a more formal role in the process. Among other things, intervenors have the right to receive copies of case-related Commission documents and filings by other intervenors. Likewise, each intervenor must provide 14 copies of its filings to the Secretary of the Commission and must send a copy of its filings to all other parties on the Commission's service list for this proceeding. If you want to become an intervenor you must file a motion to intervene according to Rule 214 of the Commission's Rules of Practice and Procedure (18 CFR 385.214) (see appendix 2). Only intervenors have the right to seek rehearing of the Commission's decision.

Affected landowners and parties with environmental concerns may be granted intervenor status upon showing good cause by stating that they have a clear and direct interest in this proceeding which would not be adequately represented by any other parties. You do not need intervenor status to have your environmental comments considered.

Additional information about the proposed project is available from the Commission's Office of External Affairs at 208–0004 or on the FERC website (www.ferc.fed.us) using the ''RIMS'' link to information in this docket number. Click on the ''RIMS'' link, select ''Docket #'' from the RIMS Menu, and follow the instructions. For assistance with access to RIMS, the RIMS helpline can be reached at (202) 208–2222.

Similarly, the ''CIPS'' link on the FERC Internet website provides access to the texts of formal documents issued by the Commission, such as orders, notices and rulemakings. From the FERC Internet website, click on the ''CIPS'' link, select ''Docket #'' from the CIPS menu, and follow the instructions. For assistance with access to CIPS, the CIPS helpline can be reached at (202) 208–2474.

Linwood A. Watson, Jr.,
Acting Secretary,

[FR Doc. 00–24091 Filed 9–19–00; 8:45 am]

BILLING CODE 6717–01–M

DEPARTMENT OF ENERGY

Federal Energy Regulatory Commission

Notice of Application for Transfer of License and Soliciting Comments, Motions to Intervene, and Protests

September 14, 2000.

Take notice that the following hydroelectric application has been filed with the Commission and is available for public inspection:

a. *Application Type:* Transfer of License.

b. *Project No:* 3511–011.

c. *Date Filed:* August 15, 2000.

d. *Applicants:* UAH-Groveville Hydro Associates and Central Hudson Gas & Electric Corporation.

e. *Name of Project:* Groveville Power.

---

[2] The appendices referenced in this notice are not being printed in the **Federal Register**. Copies are available from the Commission's Public Reference and Files Maintenance Branch, 888 First Street, NE., Washington, DC 20426, or call (202) 208–1371. Copies of the appendices were sent to all those receiving this notice in the mail.

[3] ''We,'' ''us,'' and ''our'' refer to the environmental staff of the Office of Energy Projects.

f. *Location:* The project is located on Fishkill Creek in Dutchess County, New York. The project does not utilize federal or tribal lands.

g. *Filed Pursuant to:* Federal Power Act, 16 U.S.C. §§ 791(a)–825(r).

h. *Applicant Contacts:* UAH-Groveville Hydro Associates: Judith Lagano, UAH Management Corp., c/o United American Hydropower Corp., 50 Tice Blvd., Woodcliff Lake, NJ 07675; and Central Hudson Gas & Electric Corporation: William J. Madden, Jr., John A. Wittaker, IV, Winston & Strawn, 1400 L Street, N.W., Washington, D.C. 20005, (202) 371–5700 and Ronald P. Brand, Senior Vice President—Special Projects, Central Hudson Gas & Electric Corporation, 284 South Avenue, Poughkeepsie, NY 12601, (845) 486–5260.

i. *FERC Contact:* Any questions on this notice should be addressed to Dave Snyder at (202) 219–2385.

j. *Deadline for filing comments and or motions:* October 19, 2000.

All documents (original and eight copies) should be filed with: David P. Boergers, Secretary, Federal Energy Regulatory Commission, 888 First Street, NE., Washington, DC 20426.

Please include the Project Number (3511–011) on any comments or motions filed.

k. *Description of Transfer:* UAH-Groveville Hydro Associates (transferor), licensee of the Groveville Power Project, and Central Hudson Gas & Electric Corporation (transferee) jointly and severally apply for approval of the transfer of the project license to the transferee.

l. *Locations of the Application:* A copy of the application is available for inspection and reproduction at the Commission's Public Reference Room, located at 888 First Street, NE., Room 2A, Washington, DC 20426, or by calling (202) 208–1371. The application may be viewed on the web at www.ferc.fed.us/online/rims.htm. Call (202) 208–2222 for assistance. A copy is also available for inspection and reproduction at the address in item h above.

m. Individuals desiring to be included on the Commission's mailing list should so indicate by writing to the Secretary of the Commission.

n. Comments, Protests, or Motions to Intervene—Anyone may submit comments, a protest, or a motion to intervene in accordance with the requirements of Rules of Practice and Procedure, 18 CFR 385.210, .211, .214. In determining the appropriate action to take, the Commission will consider all protests or other comments filed, but only those who file a motion to intervene in accordance with the Commission's Rules may become a party to the proceeding. Any comments, protests, or motions to intervene must be received on or before the specified comment date for the particular application.

o. Filing and Service of Responsive Documents—Any filings must bear in all capital letters the title ''COMMENTS'', ''RECOMMENDATIONS FOR TERMS AND CONDITIONS'', ''PROTEST'', OR ''MOTION TO INTERVENE'', as applicable, and the Project Number of the particular application to which the filing refers. A copy of any motion to intervene must also be served upon each representative of the Applicant specified in the particular application.

p. Agency Comments—Federal, state, and local agencies are invited to file comments on the described application. A copy of the application may be obtained by agencies directly from the Applicant. If an agency does not file comments within the time specified for filing comments, it will be presumed to have no comments. One copy of an agency's comments must also be sent to the Applicant's representatives.

Linwood A. Watson, Jr.,

Acting Secretary.

[FR Doc. 00–24095 Filed 9–19–00; 8:45 am]

BILLING CODE 6717–01–M

DEPARTMENT OF ENERGY

Federal Energy Regulatory Commission

Notice of Application Accepted for Filing and Soliciting Motions To Intervene, Protests, and Comments

September 14, 2000.

Take notice that the following hydroelectric application has been filed with the Commission and is available for public inspection:

a. *Type of Application:* Preliminary Permit.

b. *Project No.:* 11586–000.

c. *Date filed:* July 15, 2000.

d. *Applicant:* Town of Telluride, Colorado.

e. *Name of Project:* San Miguel Project.

f. *Location:* On San Miguel River, in San Miguel County, Colorado. The project would utilize no federal lands or facilities.

g. *Filed Pursuant to:* Federal Power Act, 16 U.S.C. §§ 791(a)–825(r).

h. *Applicant Contact:* Ms. Margaret Curran, Town Manager, Town of Telluride, P.O. Box 397, Telluride, Colorado 81435, (970) 728–3071.

i. *FERC Contact:* Robert Bell, (202) 219–2806.

j. *Deadline for filing motions to intervene, protests and comments:* 60 days from the issuance date of this notice.

All documents (original and eight copies) should be filed with: David P. Boergers, Secretary, Federal Energy Regulatory Commission, 888 First Street, NE., Washington, DC 20426.

The Commission's Rules of Practice and Procedure require all interveners filing documents with the Commission to serve a copy of that document on each person in the official service list for the project. Further, if an intervener files comments or documents with the Commission relating to the merits of an issue that may affect the responsibilities of a particular resource agency, they must also serve a copy of the document on that resource agency.

k. *Description of Project:* The proposed project would consist of: (1) a 9-foot-high concrete Diversion weir; (2) an impoundment having a surface area of 6 acres with negligible storage and a normal water surface elevation of 8,610 feet msl; (3) a 7,000-foot-long, 54-inch-diameter steel penstock; (4) a powerhouse containing one generating unit with an installed capacity of 4.6 MW; (5) a 150-foot-long 12.5 kV transmission line; and (6) appurtenant facilities.

The project would have an annual generation of 1 GWh that would be sold to a local utility. Please Note that Public Law number 105–212 authorizes the Commission to grant the current licensee of this project an extension providing the record supports it. An extension request is pending before the Commission. If this extension is granted, the license for this project would be reinstated and this preliminary permit application would be denied.

l. A copy of the application is available for inspection and reproduction at the Commission's Public Reference Room, located at 888 First Street, NE., Room 2A, Washington, DC 20426, or by calling (202) 208–1371. The application may be viewed on http://www.ferc.fed.us/online/rims.htm (call (202) 208–2222 for assistance). A copy is also available for inspection and reproduction at the address in item h above.

m. Preliminary Permit—Anyone desiring to file a competing application for preliminary permit for a proposed project must submit the competing application itself, or a notice of intent to file such an application, to the Commission on or before the specified comment date for the particular

application (see 18 CFR 4.36). Submission of a timely notice of intent allows an interested person to file the competing preliminary permit application no later than 30 days after the specified comment date for the particular application. A competing preliminary permit application must conform with 18 CFR 4.30(b) and 4.36.

n. Preliminary Permit—Any qualified development applicant desiring to file a competing development application must submit to the Commission, on or before a specified comment date for the particular application, either a competing development application or a notice of intent to file such an application. Submission of a timely notice of intent to file a development application allows an interested person to file the competing application no later than 120 days after the specified comment date for the particular application. A competing license application must conform with 18 CFR 4.30(b) and 4.36.

o. Notice of intent—A notice of intent must specify the exact name, business address, and telephone number of the prospective applicant, and must include an unequivocal statement of intent to submit, if such an application may be filed, either a preliminary permit application or a development application (specify which type of application). A notice of intent must be served on the applicant(s) named in this public notice.

p. Proposed Scope of Studies under Permit—A preliminary permit, if issued, does not authorize construction. The term of the proposed preliminary permit would be 36 months. The work proposed under the preliminary permit would include economic analysis, preparation of preliminary engineering plans, and a study of environmental impacts. Based on the results of these studies, the Applicant would decide whether to proceed with the preparation of a development application to construct and operate the project.

q. Comments, Protests, or Motions to Intervene—Anyone may submit comments, a protest, or a motion to intervene in accordance with the requirements of Rules of Practice and Procedure, 18 CFR 385.210, .211, .214. In determining the appropriate action to take, the Commission will consider all protests or other comments filed, but only those who file a motion to intervene in accordance with the Commission's Rules may become a party to the proceeding. Any comments, protests, or motions to intervene must be received on or before the specified comment date for the particular application.

r. Filing and Service of Responsive Documents—Any filings must bear in all capital letters the title ''COMMENTS'', ''RECOMMENDATIONS FOR TERMS AND CONDITIONS'', ''PROTEST'', OR ''MOTION TO INTERVENE'', as applicable, and the Project Number of the particular application to which the filing refers. A copy of any motion to intervene must also be served upon each representative of the Applicant specified in the particular application.

s. Agency Comments—Federal, state, and local agencies are invited to file comments on the described application. A copy of the application may be obtained by agencies directly from the Applicant. If an agency does not file comments within the time specified for filing comments, it will be presumed to have no comments. One copy of an agency's comments must also be sent to the Applicant's representatives.

Linwood A. Watson, Jr.,

Acting Secretary.

[FR Doc. 00–24096 Filed 9–19–00; 8:45 am]

BILLING CODE 6717–01–M

ENVIRONMENTAL PROTECTION AGENCY

[OPP–34203D; FRL–6743–7]

Chlorpyrifos; Receipt of Requests for Amendments, Cancellations, and Notification of Tolerance Revocation and Modifications

AGENCY: Environmental Protection Agency (EPA).

ACTION: Notice.

SUMMARY: The companies that hold the pesticide registrations of manufacturing–use pesticide products containing chlorpyrifos [O,O-diethyl O-(3,5,6–trichloro–2–pyridinyl)phosphorothioate] have asked EPA to cancel their registrations for these products. In addition, these companies have asked EPA to cancel or amend their registrations for end–use products containing chlorpyrifos. Pursuant to section 6(f)(1) of the Federal Insecticide, Fungicide, and Rodenticide Act (FIFRA), EPA is announcing the Agency's receipt of these requests from the registrants. These requests for voluntary cancellation and amendment are the result of a memorandum of agreement signed by EPA and a number of registrants of products containing chlorpyrifos on June 7, 2000, and ancillary agreements signed by other registrants shortly thereafter. Given the potential risks, both dietary and non–dietary, that chlorpyrifos use poses, especially to children, EPA intends to grant the requested cancellations and amendments to delete uses. EPA also plans to issue a cancellation order for the deleted uses and the canceled registrations at the close of the comment period for this announcement. Upon the issuance of the cancellation order, any distribution, sale, or use of chlorpyrifos products will only be permitted if such distribution, sale, or use is consistent with the terms of that order. In addition, EPA is announcing its intention to revoke the tolerance for chlorpyrifos residues in or on tomatoes and to lower the tolerance for chlorpyrifos residues in or on apples and grapes.

DATES: Comments on the requested amendments to delete uses and the requested registration cancellations must be submitted to the address provided below and identified by docket control number OPP–34203D. Comments must be received on or before October 20, 2000.

ADDRESSES: Comments may be submitted by mail, electronically, or in person. Please follow the detailed instructions for each method as provided in Unit I. of the **SUPPLEMENTARY INFORMATION**. To ensure proper receipt by EPA, it is imperative that you identify docket control number OPP–34203D in the subject line on the first page of your response.

FOR FURTHER INFORMATION CONTACT: Tom Myers, Special Review and Reregistration Division (7508C), Office of Pesticide Programs, Environmental Protection Agency, 1200 Pennsylvania Ave., NW., Washington, DC 20460; telephone number: 703 308–8589; fax number: 703–308–8041; e-mail address: myers.tom@epa.gov.

SUPPLEMENTARY INFORMATION:

I. General Information

A. Does this Action Apply to Me?

This action is directed to the public in general. You may be potentially affected by this action if you manufacture, sell, distribute, or use chlorpyrifos products. The Congressional Review Act, 5 U.S.C. 801 *et seq.*, as added by the Small Business Regulatory Enforcement Fairness Act of 1996, does not apply because this action is not a rule, for purposes of 5 U.S.C. 804(3). Since other entities may also be interested, the Agency has not attempted to describe all the specific entities that may be affected by this action. If you have any questions regarding the applicability of this action to a particular entity, consult the person listed under **FOR FURTHER INFORMATION CONTACT**.

B. How Can I Get Additional Information, Including Copies of this Document and Other Related Documents?

1. *Electronically.* You may obtain electronic copies of this document, and certain other related documents that might be available electronically, from the EPA Internet Home Page at http://www.epa.gov/. To access this document, on the Home Page select ''Laws and Regulations,'' ''Regulations and Proposed Rules'' and then look up the entry for this document under the ''**Federal Register**—Environmental Documents.'' You can also go directly to the **Federal Register** listings at http://www.epa.gov/fedrgstr/. To access information about the risk assessment for chlorpyrifos, go to the Home Page for the Office of Pesticide Programs or go directly to http://www.epa.gov/pesticides/op/chlorpyrifos.htm.

2. *In person.* The Agency has established an official record for this action under docket control number OPP–34203D. The official record consists of the documents specifically referenced in this action, any public comments received during an applicable comment period, and other information related to this action, including any information claimed as Confidential Business Information (CBI). This official record includes the documents that are physically located in the docket, as well as the documents that are referenced in those documents. The public version of the official record does not include any information claimed as CBI. The public version of the official record, which includes printed, paper versions of any electronic comments submitted during an applicable comment period, is available for inspection in the Public Information and Records Integrity Branch (PIRIB), Rm. 119, Crystal Mall #2, 1921 Jefferson Davis Hwy., Arlington, VA, from 8:30 a.m. to 4 p.m., Monday through Friday, excluding legal holidays. The PIRIB telephone number is (703) 305–5805.

C. How and to Whom Do I Submit Comments?

You may submit comments through the mail, in person, or electronically. To ensure proper receipt by EPA, it is imperative that you identify docket control number OPP–34203D in the subject line on the first page of your response.

1. *By mail.* Submit your comments to: Public Information and Records Integrity Branch (PIRIB), Information Resources and Services Division (7502C), Office of Pesticide Programs (OPP), Environmental Protection Agency, 1200 Pennsylvania Ave., NW., Washington, DC 20460.

2. *In person or by courier.* Deliver your comments to: Public Information and Records Integrity Branch (PIRIB), Information Resources and Services Division (7502C), Office of Pesticide Programs (OPP), Environmental Protection Agency, Rm. 119, Crystal Mall #2, 1921 Jefferson Davis Hwy., Arlington, VA. The PIRIB is open from 8:30 a.m. to 4 p.m., Monday through Friday, excluding legal holidays. The PIRIB telephone number is (703) 305–5805.

3.*Electronically.* You may submit your comments electronically by e–mail to: opp-docket@epa.gov, or you can submit a computer disk as described above. Do not submit any information electronically that you consider to be CBI. Avoid the use of special characters and any form of encryption. Electronic submissions will be accepted in WordPerfect 6.1/8.0 or ASCII file format. All comments in electronic form must be identified by docket control number OPP–34203D. Electronic comments may also be filed online at many Federal Depository Libraries.

D. How Should I Handle CBI that I Want to Submit to the Agency?

Do not submit any information electronically that you consider to be CBI. You may claim information that you submit to EPA in response to this document as CBI by marking any part or all of that information as CBI. Information so marked will not be disclosed except in accordance with procedures set forth in 40 CFR part 2. In addition to one complete version of the comment that includes any information claimed as CBI, a copy of the comment that does not contain the information claimed as CBI must be submitted for inclusion in the public version of the official record. Information not marked confidential will be included in the public version of the official record without prior notice. If you have any questions about CBI or the procedures for claiming CBI, please consult the person listed under **FOR FURTHER INFORMATION CONTACT**.

E. What Should I Consider as I Prepare My Comments for EPA?

You may find the following suggestions helpful for preparing your comments:

1. Explain your views as clearly as possible.

2. Describe any assumptions that you used.

3. Provide copies of any technical information and/or data you used that support your views.

4. If you estimate potential burden or costs, explain how you arrived at the estimate that you provide.

5. Provide specific examples to illustrate your concerns.

6. Offer alternative ways to improve the notice or collection activity.

7. Make sure to submit your comments by the deadline in this notice.

8. To ensure proper receipt by EPA, be sure to identify the docket control number assigned to this action in the subject line on the first page of your response. You may also provide the name, date, and **Federal Register** citation.

II. Receipt of Requests to Cancel and Amend Registrations to Delete Uses.

A. Background

In a memorandum of agreement (Agreement) effective June 7, 2000, EPA and a number of registrants of pesticide products containing chlorpyrifos agreed to several voluntary measures that will reduce the potential exposure to children associated with chlorpyrifos containing products. Shortly thereafter, EPA and several other pesticide registrants of manufacturing–use products containing chlorpyrifos signed ancillary agreements in which the parties agreed to comply with the terms of the June 7, 2000, agreement. EPA initiated the negotiations with registrants after finding chlorpyrifos, as currently registered, was an exposure risk especially to children. As part of the Agreement, the signatory registrants that hold the pesticide registrations of manufacturing–use pesticide products containing chlorpyrifos have asked EPA to cancel their registrations for these products. In addition, these companies have asked EPA to cancel or amend their registrations for end–use products containing chlorpyrifos. Pursuant to section 6(f)(1) of FIFRA, EPA is announcing the Agency's receipt of these requests from the registrants. With respect to the registration amendments, the companies have asked EPA to amend end–use product registrations to delete the following uses: all termite control uses (these will be phased out); all residential uses (except for ant and roach baits in child resistant packaging (CRP) and fire ant mound drenches for public health purposes by licensed applicators and mosquito control for public health purposes by public health agencies); all indoor non–residential uses (except ship holds, industrial plants, manufacturing plants, food processing plants, and containerized baits in CRP); all outdoor non–residential sites (except golf courses,

road medians, industrial plant sites, non–structural wood treatments, and fire ant mound drenches for public health purposes by licensed applicators and mosquito control for public health purposes by public health agencies); and use on tomatoes and post–bloom apple trees. With respect to the registration cancellations, the companies have submitted replacement applications for registration with new labeling that would also eliminate all of these uses. In addition, the companies agreed to limit the maximum chlorpyrifos end–use dilution to 0.5% active ingredient (a.i.) for termiticide uses that will be phased out, limit the maximum label application rate for outdoor non–residential use on golf courses, road medians, and industrial plant sites to 1 lb/a.i. per acre, and either classify all new/amended chlorpyrifos products (except baits in CRP) as Restricted Use or package the products in large containers, depending on the formulation type, to ensure that remaining chlorpyrifos products are not available to homeowners. In return, EPA stated that with this Agreement, it had no current intention to initiate any cancellation or suspension proceedings under section 6(b) or 6(c) of FIFRA with respect to the issues addressed in the Agreement.

B. Requests for Voluntary Cancellation of Manufacturing–Use Products

Pursuant to the Agreement and FIFRA section 6(f)(1)(A), the registrants have submitted requests for voluntary cancellation of registrations for their manufacturing–use products. The registrations for which cancellations were requested are identified in the following Table 1:

TABLE 1.— MANUFACTURING –USE PRODUCT REGISTRATION CANCELLATION REQUESTS

Company	Reg. No.	Product
Aventis Environmental Science USA	432–570:	Ultratec Insecticide w/ SBP–1382/ Chlorpyrifos Trans. E.C. 1.6%–16%
	432 –571:	Ultratec Insecticide w/ SBP–1382/ Chlorpyrifos Trans. E.C. 3.2%–16%
	432–615:	Ultratec Insecticide w/ Chlorpyrifos/Esbiothrin Trans. E.C. 2.5%–25%
	432–649:	Ultratec Insecticide w/ SBP–1382/ Chlorpyrifos Trans. E.C. 1.6%–16%
	432–661:	Ultratec Insecticide w/ Chlorpyrifos/ Esbiothrin Trans.
	432–662:	Ultratec Insecticide w/ Chlorpyrifos Trans. Emuls. 25%
	432–682:	Ultratec Insecticide w/ Chlorpyrifos/Pyr/PBO Trans. Emuls. 1.5–7.5–15
	432–692:	Ultratec Insecticide w/ SBP–1382/ Chlorpyrifos Trans. E.C. 3.2%–16% LO
	432–718:	SBP–1382/ Chlorpyrifos Trans. E.C. 3.2%–16% LO For Pres. Spray
	432–1019:	Niagara P-D 5 Residual Insecticide Intermediate
	432–1095:	Pyrenone Dursban Aqueous Base
	432–1104:	Pyrenone Dursban W-B
	432–1106:	Pyrenone Dursban Aqueous Base II
Verdant Brands, Inc.	769–690:	SMCP DFC-4 Formulators Concentrate
McLaughlin Gormley King Company	1021–1215:	Pyrocide Intermediate 7129
	1021–1220:	D-Trans Intermediate 1957
	1021–1221:	Pyrocide Intermediate 7130
	1021–1434:	Esbiol Intermediate 2235
	1021–1438:	D-Trans Intermediate 2247
	1021–1444:	Multicide Intermediate 2253
	1021–1506:	D-Trans Intermediate 2321
	1021–1707:	Multicide Concentrate 2748
	1021–1717:	Multicide Intermediate 2745
Griffin LLC	1812–429:	Questor MUP Insecticide
Cheminova, Inc.	4787–27:	Chlorpyrifos Technical
	4787–29:	Cyren MUC
	4787–30:	Cyren 150 Concentrate
	4787–32:	Cyren RT
3M Company	10350– 10:	Dursban 20 MEC
Makhteshim-Agan of North America Inc	11678–45:	Pyrinex Chlorpyrifos Insecticide
Platte Chemical Company	34704–801:	Chlorpyrifos Technical
Luxembourg Industries (Pamol) Ltd.	42519–17:	Dorsan Technical
Insecta Sales & Research, Inc.	45600–6:	Insecta No. 105
Micro-Flo Company	51036–217:	Chlorpyrifos 61.5% MUP
Control Solutions, Inc	53883–34:	Martin's 6 lb. Chlorpyrifos
Dow AgroSciences LLC	62719–15:	Dursban F Insecticidal Chemical
	62719–44:	Dursban R
	62719–45:	Dursban 30 SEC
	62719–66:	Dursban HF Insecticidal Concentrate
	62719–76:	Lentrek 6
	62719–78:	Dursban W Insecticidal Chemical
	62719–225:	XRM–5222
Gharda USA, Inc	70907–1:	Chlorpyrifos Technical
	70907–6:	Chlorpyrifos 6 Manufacturing Concentrate
	70907–14:	Chlorpyrifos 4 Manufacturing Concentrate

Under section 6(f)(1)(A) of FIFRA, registrants may request, at any time, that EPA cancel any of their pesticide registrations. Section 6(f)(1)(B) of FIFRA requires that EPA provide a 30-day period in which the public may comment before the Agency may act on the request for voluntary cancellation. In addition, section 6(f)(1)(C) of FIFRA requires that EPA provide a 180-day comment period on a request for voluntary termination of any minor agricultural use before granting the request, unless (1) the registrants request a waiver of the comment period, or (2) the Administrator determines that continued use of the pesticide would pose an unreasonable adverse effect on the environment. The registrants have requested that EPA waive the 180-day comment period. In light of this request, EPA is granting the request to waive the 180-day comment period and is providing a 30-day public comment period before taking action on the requested cancellations. Given the potential risks, both dietary and non–dietary, that chlorpyrifos use poses, especially to children, EPA intends to grant the requested cancellations at the close of the comment period for this announcement.

C. Requests for Voluntary Cancellation of End–Use Products

In addition to requesting voluntary cancellation of manufacturing–use products, several registrants have submitted requests for voluntary cancellation of some of their registrations for end–use pesticide products containing chlorpyrifos. The end–use registrations for which cancellation was requested are identified in the following Table 2:

TABLE 2.—END–USE PRODUCT REGISTRATION CANCELLATION REQUESTS

Company	Reg. No.	Product
Aventis Environmental Science USA	432–566	SBP–1382/ Chlorpyrifos Transparent Emulsion Spray 0.05% + 0.5%
	432–567:	SBP–1382/ Chlorpyrifos Transparent Emulsion Dilutable Conc. 1.6% + 16%
	432–568	Ultratec Insecticide w/ SBP–1382/ ChlorpyTrans. EM. Dil.Conc. 3.2% + 16%
	432–569:	SBP–1382/ Chlorpyrifos Transparent Emulsion Spray 0.1 % + 0.5%
	432–1027:	Pyrenone Dursban Roach & Ant Spray'
	432–1059:	Pyrenone Dursban Dual Use E.C.
	432–1101:	Aqueous Residual Spray
	432–1107:	Pyrenone Dursban Water–Based Pressurized Spray
Verdant Brands, Inc	769–562:	Mole Cricket Bait ''D''
	769–576:	Sureco Indoor Pest Control
	769–578:	Sureco Yard and Kennel Spray Concentrate
	769–607:	R&M Insect Spray with Resmethrin/Dursban
	769–666:	Dursban 1E Insecticide
	769–668:	SMCP D/V 217 Insecticide
	769–672:	SMCP Residual Roach Spray
	769–685:	SMCP Dursban Household Insecticide
	769–694:	SMCP Xtraban Roach Concentrate
	769–697:	SMCP Dursban Plus Turf Insecticide
	769–715:	SMCP Lawn–Gard Spray
	769–716:	SMCP Lawn and Ornamental Spray
	769–717:	Dursban .8% Granular Insecticide
	769–721:	SMCP Dursban Granular Insecticide
	769–731:	SMCP Home Lawn and Ornamental Spray
	769–735:	SMCP Dursban Cricket Bait ι200
	769–737:	SMCP Blatta–Bits Roach bait Insecticide
	769–738:	Frank's Finest Roach/Flea Spray
	769–781:	AFC Residual Insect Spray
	769–800:	Superior Dursban 4E Emulsifiable Concentrate
	769–801:	Superior Dursban 2E
	769–804:	Superior Delve Concentrate
	769–826:	Sureco T.A.S.K
	769–827:	Dursban Plus Dichlovos
	769–828:	Dursban 1.4% G
	769–829:	SMCP 32–4–7 Fertilizer with Dursban
	769–831:	SMCP 40–0–0 with Dursban
	769–873:	Dursban 135 EC
	769–880:	Pratt Dursban 250 EC
	769–936:	Warner Enterprises Residual Spray
	769–952:	Dursban G5 Granular
	769–953:	Pratt Dursban G232 Granular Lawn Insect Control for Professional Use
	769–962:	Ulti–Mate Homeowner pest Control Concentrate
McLaughlin Gormley King Company	1021–1362:	Pyrocide Concentrate 7254
	1021–1416:	Pyrocide Residual Contact Spray 7335
	1021–1435:	Esbiol Residual Contact Spray 2236
	1021–1439:	D–Trans Concentrate 2249
	1021–1605:	D–Trans Residual Spray 2580
	1021–1668:	Evercide Residual Spray 2640
	1021–1693:	Evercide Residual Pump Spray 2641
	1021–1716:	Multicide Pressurized Ant and Roach Spray 27451
Griffin LLC	1812–427:	Pyrinex 4EC Insecticide

TABLE 2.—END–USE PRODUCT REGISTRATION CANCELLATION REQUESTS—Continued

Company	Reg. No.	Product
	1812–428:	Pyrinex 2 EC Area Insecticide
	1812–443:	Questor LO Insecticide
3M Company	10350–12:	Duratrol Yard Spray Concentrate
Luxembourg Industries (Pamol) Ltd.	42519–18:	Dorsan 4E–41
Micro–Flo Company	51036–102:	Chlorpyrifos 0.5% RTU
	51036–118:	Chlorpyrifos 4E LO Insecticide
	51036–119:	Chlorpyrifos 1E
	51036–223:	Chloroban 4–E
	51036–303:	Chlorpyrifos 5.3%
Control Solutions, Inc.	53883–36:	Martin's Surrender Chlorpyrifos TC
	53883–37:	Martin's Chlorpyrifos 2E
	53883–49:	Martin's Dursban 1L Lawn and Ornamental Plant Insecticide
	53883–53:	Martin's Dursban Pest Control
	53883–55:	Martin's Termite and Soil Insect Control
Dow AgroSciences LLC	62719–22:	Dursban 25W
	62719–23:	Lorsban 4E
	62719–29:	Lorsban1–PE
	62719–41:	Dursban 4 Plus
	62719–46:	Dursban WB05
	62719–55:	Dursban LO
	62719–56:	Dursban 1–12 Insecticide
	62719–74:	Dursban ME
	62719–85:	Lorsban 7.5 G
	62719–163:	Dursban 50 DF
	62719–197:	Dursban WB05 III
	62719–235:	Dursban Lawn and Ornamental Insecticide
	62719–252:	Dursban 50WSP Insecticide in Water Soluble Packets
	62719–269:	Dursban NXS–4
	62719–281:	Dursban NXS05
	62719–283:	Dursban ME02 + ETOC
	62719–284:	Dursban NXS–6
	62719–298:	Dursban ME 1.7
Cheminova, Inc.	67760–5:	Cyren 1E
	67760–22:	Cheminova Chlorpyrifos 4E–AG–SG
	67760–23:	Cyren Turf and Ornamental Insecticide
	67760–24:	Cyren 1/2 G Granular Insecticide
	67760–25:	Cyren 1G
	67760–32:	Cyren 2E XL
Platte Chemical Company	2393–245:	Hopkins Lincoln Granules
	34704–305	Hopkins Lincoln Granules
	34704–413:	Dursban 1 Coated Granules
	34704–449:	Clean Crop Chlorpyrifos 1.14G Insecticide and Fertilizer
	34704–523:	Clean Crop Dursban Insect Spray
	34704–526:	Pest Control for Home and Garden
	34704–541:	Dursban 4E
	34704–748:	Clean Crop Household Insect Spray
	34704–765:	Clean Crop Dursban 1

Under section 6(f)(1)(A) of FIFRA, registrants may request, at any time, that EPA cancel any of their pesticide registrations. The registrants have requested that EPA waive the 180–day public comment period under section 6(f)(1)(C)(ii) of FIFRA In light of this request, EPA is granting the request to waive the 180-day comment period and is providing a 30-day public comment period before taking action on the requested cancellations. Given the potential dietary and non–dietary risks that chlorpyrifos use poses, especially to children, EPA intends to grant the requested cancellations at the close of the comment period for this announcement.

1. *Requests for voluntary amendments to delete uses from the registrations of end–use products.* Pursuant to section 6(f)(1)(A) of FIFRA, the signatory registrants have also submitted requests to amend their other end–use registrations of pesticide products containing chlorpyrifos to delete the aforementioned uses from any product bearing such use. The registrations for which amendments to delete uses were requested are identified in the following Table 3:

TABLE 3.—END–USE PRODUCT REGISTRATION AMENDMENT REQUESTS

Company	Reg. No.	Product/SLNs
Verdant Brands, Inc.	769–641:	Dursban 2E Insecticide
	769–662:	SMCP Dursban .5% Granular Insecticide
	769–679:	Dursban 1% Granular Insecticide
	769–680:	Dursban Mole Cricket Bait

TABLE 3.—END–USE PRODUCT REGISTRATION AMENDMENT REQUESTS—Continued

Company	Reg. No.	Product/SLNs
	769–699:	Dursban 4E Insecticide
	769–726:	Dursban 1G Granular Insecticide
	769–808:	Banzol
	769–825:	SMCP Dursban 2.5% G Insecticide
	769–940:	Dursban Plus Insecticide
Griffin LLC	1812–403:	Chlorfos 4E Insecticide
	1812–404:	Chlorfos 15G
3M Company	10350–22:	MEC Chlorpyrifos Livestock Premise Spray Concentrate
Platte Chemical Company	34704–55:	Clean Crop Chlorpyrifos 1/2G Turf Insecticide
	34704–65:	Chlorpyrifos 2E
	34704–66:	Clean Crop Chlorpyrifos 4E Insecticide
	34704–423:	Dursban 2 Coated Granules
	34704–448:	Clean Crop Dursban 1G Insecticide
	34704–587	Chlorpyrifos– thiram 7.5–7.5G
	34704–693:	Clean Crop Chlorpyrifos 50WP Seed Treater
Luxembourg Industries (Pamol) Ltd.	42519–19:	Dorsan 4E–45
	42519–20:	Dorsan 2E
	42519–21:	Dorsan 4E
Insecta Sales & Research Inc.	45600–1:	Insecta
	45600–11:	Insecta 1000
	45600–17:	Insecta for Manholes
Control Solutions, Inc.	53883–48:	Martin's Dursban Insecticide Granules
	53883–52:	Martin's Dursban 21/2% Insecticide Granules
Micro–Flo Company	51036–117:	Chlorpyrifos 1/2% Bait
	51036–122:	Micro–flo Chlorpyrifos Termite Concentrate
	51036–152:	Micro–Flo Chlorpyrifos 2E
	51036–153:	Chlorpyrifos1% Bait
	51036–154:	Chlorpyrifos 4–E Insecticide
	51036–216:	Micro–Flo Chlorpyrifos 4E Wood Treatment
	51036–220:	1% Chlorpyrifos Granule
	51036–247:	Chlorpyrifos 2.5% G
	51036–259:	Chlorpyrifos 2.32 Bait
	51036–263:	Chlorpyrifos 1/2% Granule
	51036–264:	Chlorpyrifos 2.32% Granule
	51036–291:	Chlorpyrifos 4# AG
	51036–300:	Chlorpyrifos 15G
Dow AgroSciences LLC	62719–11:	Dursban 4E Insecticide
	62719–14:	Dursban 1/2 G Granular
	62719–34:	Lorsban 15G
	62719–35:	Dursban Turf Insecticide
	62719–39:	Lorsban 50W Wettable Powder SLNs; FL9000500, GA93000300
	62719–47:	Dursban TC
	62719–54:	Dursban 1–D Insecticide
	62719–65:	Dursban 2E
	62719–68:	Dursban 50W
	62719–69:	Dursban WT Insecticidal Wood Treatment Concentrate
	62719–72:	Dursban 50W in Water Soluble Packets
	62719–77:	Lentrek 6 WT
	62719–88:	Dursban ME20 Microencapsulated Insecticide
	62719–89:	Dursban ME04 Microencapsulated Insecticide
	62719–90:	Dursban ME02 Microencapsulated Insecticide
	62719–166:	Dursban Pro
	62719–167:	Equity
	62719–210:	Dursban 1G Insecticide
	62719–221:	Lorsban 50W Insecticide in Water Soluble Packets SLNs; FL92001000,GA93000400
	62719–254:	Dursban 4E–N
	62719–255:	Dursban 50W Nursery in Water Soluble Packets
	62719–271:	Dursban 1F
	62719–276:	Dursban 2.5G
	62719–293:	Dursban 75WG
	62719–295:	Lorsban 30G
	62719–316:	Dursban Plus Fertilizer 2
Makhteshim– Agan of North America Inc.	66222–3:	Pyrinex Chlorpyrifos 4EC
	66222–4:	Pyrinex Chlorpyrifos Lawn Chinch Bug and Sod Webworm Control
	66222–5:	Pyrinex Chlorpyrifos Lawn and Ornamental Insecticide w/ Dursban 2E
	66222–6:	Pyrinex Chlorpyrifos Dursban 2E Insecticide
	66222–17:	Pyrinex Chlorpyrifos Termiticide Concentrate
Cheminova, Inc.	67760–6:	Cyren 2E
	67760–7:	Cyren 4E Insecticide

TABLE 3.—END–USE PRODUCT REGISTRATION AMENDMENT REQUESTS—Continued

Company	Reg. No.	Product/SLNs
Gharda USA, Inc.	67760–10:	Cyren TC
	67760–31:	Cyren 2 TC
	70907–2 :	Regatta 4E Chlorpyrifos Professional Insecticide
	70907–4:	Pilot 4E Chlorpyrifos Agricultural Insecticide
	70907–7:	Navigator 4 TC Chlorpyrifos Termite Concentrate
	70907–8:	Pilot 50W Chlorpyrifos Agricultural Insecticide
	70907–9:	Regatta 50W Chlorpyrifos Professional Insecticide
	70907–13:	Navigator 4WT Chlorpyrifos Wood Treatment Concentrate

Under section 6(f)(1)(A) of FIFRA, registrants may request, at any time, that their pesticide registrations be amended to delete one or more pesticide uses. The registrants have requested that EPA waive the 180-day comment period. In light of this request, EPA is granting the request to waive the 180-day comment period and is providing a 30-day public comment period before taking action on the requested amendments to delete uses. Given the potential dietary and non–dietary risks that chlorpyrifos use poses, especially to children, EPA intends to grant the requested amendments to delete uses at the close of the comment period for this announcement.

III. Proposed Existing Stocks Provisions

The registrants have requested voluntary cancellation of the chlorpyrifos registrations identified in Tables 1 and 2 and voluntary amendment to terminate certain uses of the chlorpyrifos registrations identified in Table 3. Pursuant to section 6(f) of FIFRA, EPA intends to grant the requests for voluntary cancellation and amendment. For purposes of the cancellation order that the Agency intends to issue at the close of the comment period for this announcement, the term ''existing stocks '' will be defined, pursuant to EPA's existing stocks policy as published in the **Federal Register** of June 26, 1991, (56 FR 29362), as those stocks of a registered pesticide product which are currently in the United States and which have been packaged, labeled, and released for shipment prior to the effective date of the cancellation or amendment. Any distribution, sale, or use of existing stocks after the effective date of the cancellation order that the Agency intends to issue that is not consistent with the terms of that order will be considered a violation of section 12(a)(2)(K) and /or 12(a)(1)(A) of FIFRA.

A. Manufacturing–Use Products

1. *Distribution or sale*. The distribution or sale of existing stocks of any manufacturing–use product identified in Table 1 will not be lawful under FIFRA as of the 30th day following the issuance of the cancellation order canceling the registrations of the products identified in Table 1, except for the purposes of returns for relabeling consistent with the Agreement, shipping such stocks for export consistent with the requirements of section 17 of FIFRA, or for proper disposal.

2. *Use for producing other manufacturing–use products*. The use of existing stocks of any manufacturing–use product identified in Table 1 for formulation into any other manufacturing–use product will not be lawful under FIFRA as of the date of the cancellation order unless such product bears an EPA–approved label that is consistent with the provisions of the Agreement.

3. *Use for producing end–use products*— (i) *Restricted use and package size limitations*—(a) The use of existing stocks of any manufacturing–use product identified in Table 1 for formulation into any end–use product that is an emulsifiable concentrate (EC) will not be lawful under FIFRA as of December 1, 2000, unless the end–use product is labeled for restricted use.

(b) The use of existing stocks of any manufacturing–use product identified in Table 1 for formulation into any end–use product labeled for any agricultural use (other than cattle ear tags) and that is not an EC, will not be lawful under FIFRA as of December 1, 2000, unless the product is either labeled for restricted use or packaged in containers no smaller than 15 gallons of a liquid formulation, 50 pounds of a granular formulation, or 25 pounds of any other dry formulation;

(c) The use of existing stocks of any manufacturing–use product identified in Table 1 for formulation into any end–use product labeled solely for non–agricultural uses (other than containerized baits in Child Resistant Packaging (CRP)) and that is not an EC, will not be lawful under FIFRA as of December 1, 2000, unless the product is either labeled for restricted use or packaged in containers no smaller than 15 gallons of a liquid formulation or 25 pounds of a dry formulation.

(ii) *Use in products labeled for use on tomatoes or use on apple trees post bloom*. The use of existing stocks of any manufacturing–use product identified in Table 1 for formulation into end–use products bearing instructions for use on tomatoes or use on apple trees following bloom will not be lawful under FIFRA as of the date of issuance of the cancellation order canceling the manufacturing–use products listed in Table 1.

(iii) *Use in products labeled for other end–uses*. The use of existing stocks of any manufacturing–use product identified in Table 1 for formulation into any end–use product bearing instructions for any of the following uses will not be lawful under FIFRA after December 1, 2000:

(a) All termite control uses, unless the end–use product bears directions for use of a maximum 0.5% chlorpyrifos end–use dilution;

(b) Post–construction termite control, except for spot and local termite treatment, provided the label of the end–use product states that the product may not be used for spot and local treatment after December 31, 2002;

(c) Indoor residential, except for containerized baits in CRP;

(d) Indoor non–residential, except for containerized baits in CRP and products with formulations other than EC that bear labeling solely for one or more of the following uses: warehouses, ship holds, railroad boxcars, industrial plants, manufacturing plants, or food processing plants;

(e) Outdoor residential, except for products bearing labeling solely for one or more of the following public health uses: individual fire ant mound treatment by licensed applicators or mosquito control by public health agencies;

(f) Outdoor non–residential, except for products that bear labeling solely for one or more of the following uses: golf courses, road medians, and industrial plant sites, provided the maximum label

application rate does not exceed 1lb./ai per acre; mosquito control for public health purposes by public health agencies; individual fire ant mound treatment for public health purposes by licensed applicators; and fence posts, utility poles, railroad ties, landscape timbers, logs, pallets, wooden containers, poles, posts and processed wood products;

(iv) *Final use date for any manufacturing–use product labeled for termite control*. The use of existing stocks of any manufacturing–use product identified in Table 1 for formulation into any end–use product labeled for termite control will not be lawful under FIFRA after December 31, 2004, except that EPA will permit the continued use for the manufacture of end-use products labeled solely for pre-construction termite control if EPA has issued a written determination that the pre–construction use may continue consistent with the requirements of FIFRA.

4. *All other use*. Any use of existing stocks of a canceled manufacturing–use product identified in Table 1 that is not otherwise limited or prohibited as set forth in Unit III.A.1.–3. of this document may continue until such stocks are exhausted provided such use is in accordance with the existing label of that product.

B. End–Use Products

1. *Distribution, sale or use of products bearing instructions for use on tomatoes or apples trees post bloom*. The distribution, sale or use of existing stocks by any person of any product listed in Table 2 or 3 that bears instructions for post–bloom application to apple trees or use on tomatoes will not be lawful under FIFRA after December 31, 2000. Any use of such product until that date must be in accordance with the existing labeling of that product.

2. *Distribution or sale by registrants of products bearing other uses*— (i) *Restricted use and package size limitations*— (a) The distribution or sale by registrants of existing stocks of any EC formulation product listed in Table 2 or 3 will not be lawful under FIFRA after February 1, 2001 unless the product is labeled as restricted use.

(b) The distribution or sale by registrants of existing stocks of any product listed in Table 2 or 3 labeled for any agricultural use and that is not an EC, will not be lawful under FIFRA after of February 1, 2001, unless the product is either labeled for restricted use or packaged in containers no smaller than 15 gallons of a liquid formulation, 50 pounds of a granular formulation, or 25 pounds of any other dry formulation;

(c)The distribution or sale by registrants of existing stocks of any product listed in Table 2 or 3 labeled solely for non–agricultural uses (other than containerized baits in CRP) and that is not an EC, will not be lawful under FIFRA after of February 1, 2001, unless the product is either labeled for restricted use or packaged in containers no smaller than 15 gallons of a liquid formulation or 25 pounds of a dry formulation.

(ii) *Prohibited uses*. The distribution or sale of existing stocks by registrants of any product identified in Table 2 or 3 that bears instructions for any of the following uses will not be lawful under FIFRA after February 1, 2001:

(a) Termite control, unless the product bears directions for use of a maximum 0.5% active ingredient chlorpyrifos end–use dilution;

(b) Post–construction termite control, except for spot and local termite treatment, provided the label of the product states that the product may not be used for spot and local treatment after December 31, 2002;

(c) Indoor residential except for containerized baits in CRP;

(d) Indoor non–residential except for containerized baits in CRP and products with formulations other than EC that bear labeling solely for one or more of the following uses: warehouses, ship holds, railroad boxcars, industrial plants, manufacturing plants, or food processing plants;

(e) Outdoor residential except for products bearing labeling solely for one or more of the following public health uses: individual fire ant mound treatment by licensed applicators or mosquito control by public health agencies;

(f) Outdoor non–residential except for products that bear labeling solely for one or more of the following uses: golf courses, road medians, and industrial plant sites, provided the maximum label application rate does not exceed 1lb./ai per acre; mosquito control for public health purposes by public health agencies; individual fire ant mound treatment for public health purposes by licensed applicators; and fence posts, utility poles, railroad ties, landscape timbers, logs, pallets, wooden containers, poles, posts and processed wood products.

3. *Retail and other distribution or sale*. The retail sale of existing stocks of products listed in Table 2 or 3 bearing instructions for the prohibited uses set forth in Unit III.B.2.(b)(i)–(vi) of this document will not be lawful under FIFRA after December 31, 2001. Except as provided in the previous sentence or in Units III.B.1. and III.B.4 of this document, EPA intends to permit distribution or sale of products identified in Table 2 or 3 by persons other than registrants until such stocks are exhausted.

4. *Final distribution, sale and use date for preconstruction termite control*. The distribution, sale or use of any product listed in Table 2 or 3 bearing instructions for pre–construction termiticide use will not be lawful under FIFRA after December 31, 2005, unless, prior to that date, EPA has issued a written determination that such use may continue consistent with the requirements of FIFRA.

5. *Use of existing stocks*. Except for products bearing those uses identified in Units III.B.1. and III.B.4. of this document, EPA intends to permit the use of existing stocks of products listed in Table 2 or 3 until such stocks are exhausted, provided such use is in accordance with the existing labeling of that product.

IV. Notification of Intent to Revoke Tolerances

This document also serves to give notice that the Agency intends to propose to revoke the tolerance found in 40 CFR 180.342 for residues of chlorpyrifos in or on tomatoes with a revocation date of June 30, 2001. Accordingly, the Agency will issue such a proposed rule to be published in the **Federal Register**. In the June 7, 2000, Agreement, the registrants agreed to cancel the use of chlorpyrifos products on tomatoes. The Agreement states that chlorpyrifos manufacturing-use products may not be reformulated for use on tomatoes, and that EPA intends to prohibit all distribution, sale, or use of any end–use product bearing instructions for post–bloom application to apple trees or use on tomatoes after December 31, 2000. In addition, this document serves to give notice that the Agency intends to propose to lower tolerances found in 40 CFR 180.342 for residues of chlorpyrifos in or on apples and grapes. The Agency will issue such a proposed rule to be published in the **Federal Register**.

V. Import Tolerance Guidance

The Agency recognizes that interested parties may want to retain a tolerance in the absence of a U.S. registration, to allow legal importation of food into the United States. To assure that all food marketed in the United States is safe, under the FFDCA, EPA may require the same technical chemistry and toxicology data for such import tolerances (tolerances without related

U.S. registrations) as required to support U.S. food use registrations and any resulting tolerances. In addition, EPA may require residue chemistry data (crop field trials) that are representative of growing conditions in exporting countries in the same manner that the Agency requires representative residue chemistry data from different U.S. regions to support domestic use of the pesticides and the tolerance. Interested parties should contact the Agency for written guidance on adapting U.S. residue chemistry data requirements to non-U.S. growing conditions in order to support an import tolerance.

List of Subjects

Environmental protection, Memorandum of Agreement, Pesticides and pests.

Dated:September 12, 2000.

Lois A. Rossi,

Director, Special Review and Reregistration Division, Office of Pesticide Programs.

[FR Doc. 00–24211 Filed 9–19–00; 8:45 am]

BILLING CODE 6560–50–S

ENVIRONMENTAL PROTECTION AGENCY

[OPP–64051; FRL–6744–2]

Vinclozolin; Receipt of Request For Amendments to Delete Uses

AGENCY: Environmental Protection Agency (EPA).

ACTION: Notice.

SUMMARY: In accordance with section 6(f)(1) of the Federal Insecticide, Fungicide, and Rodenticide Act (FIFRA), as amended, EPA is issuing a notice of receipt of request by BASF Corporation to amend its registrations for products containing 3-(3,5-dichlorophenyl)-5-ethenyl-5-methyl-2,4-oxazolidinedione), or vinclozolin, to terminate certain uses. The requests to cancel certain uses from the registrations are intended to mitigate dietary and aggregate risks which exceed the Agency's level of concern. EPA will decide whether to approve the requests after consideration of public comment.

DATES: Comments on the requested amendments to delete uses must be submitted to the address provided below by October 20, 2000.

FOR FURTHER INFORMATION CONTACT: By mail: Deanna Scher, Special Review and Reregistration Division (7508C), Office of Pesticide Programs, Environmental Protection Agency, 1200 Pennsylvania Ave., NW., Washington, DC 20460; telephone number: (703) 308–7043; e-mail address: scher. deanna@epa.gov.

SUPPLEMENTARY INFORMATION:

I. General Information

A. Does this Action Apply to Me?

This action is directed to the public in general. Although this action may be of particular interest to persons who produce or use pesticides, the Agency has not attempted to describe all the specific entities that may be affected by this action. If you have any questions regarding the information in this notice, consult the person listed under **FOR FURTHER INFORMATION CONTACT.**

B. How Can I Get Additional Information, Including Copies of this Document and Other Related Documents?

Electronically. You may obtain electronic copies of this document, and certain other related documents that might be available electronically, from the EPA Internet Home Page at http://www.epa.gov/. To access this document, on the Home Page select ''Laws and Regulations,'' ''Regulations and Proposed Rules,'' and then look up the entry for this document under the ''**Federal Register**—Environmental Documents.'' You can also go directly to the **Federal Register** listings at http://www.epa.gov/fedrgstr/.

II. BASF Request to Amend Registrations

A. Background Information

Vinclozolin (trade names Curalan, Ronilan, Vorlan, and Touche) is a fungicide first registered in 1981 to control various types of rot cause by *Botrytis spp., Sclerotinia spp,* and other types of mold and blight causing organisms on lettuce, onions, raspberries, succulent beans, canola, kiwi, chicory grown for endive, and turf on golf courses, commercial sites, and industrial sites. Vinclozolin is also registered for use on ornamental plants in greenhouses and nurseries.

BASF, the sole registrant of vinclozolin, petitioned EPA to establish tolerances for residues of the fungicide vinclozolin and its metabolites containing the 3,5-dichloroanaline moiety in or on canola and succulent beans (65 FR 21427, April 21, 2000) (FRL–6555–6). Concomitantly, BASF also proposed amendments under section 3 of FIFRA to the label for Ronilan fungicide (EPA Reg. No. 7969–85) to add the use of these crops. However, EPA was unable to make the ''reasonable certainty of no harm'' finding mandated by section 408(b)(2) of the Federal Food, Drug, and Cosmetic Act (FFDCA) for succulent beans and canola use and associated tolerances if all existing uses remained in place.

In addition to the action on the tolerance petition, EPA has been working to make a reregistration decision under FIFRA concerning vinclozolin and plans to release a Reregistration Eligibility Decision shortly. As part of the reregistration process, the Agency has recently identified risk concerns for occupational workers in the ornamental industry in part due to the potential for long-term exposure. The Agency also identified a risk of concern for children playing on transplanted sod previously treated on a sod farm.

B. Request for Voluntary Cancellation

To reduce the risk posed by exposure to vinclozolin, and thereby enable the Agency to make a ''reasonable certainty of no harm'' finding for succulent beans and canola and the related tolerances, BASF requested the immediate voluntary cancellation of some registered uses. In addition, BASF requested a phase-out over the next 4 years of all domestic food uses of vinclozolin except for the use on canola, and the revocation of all import tolerances except for wine grapes to permit the importation of treated wine. BASF also requested that EPA delete the use of vinclozolin on ornamentals and modify use of vinclozolin on turf.

On May 31, 2000, BASF submitted a written request to EPA seeking to amend the registrations for vinclozolin. Specifically, BASF requested that EPA immediately amend registration number 7969–85 (Ronilan, Curalan, Touche) to terminate the use of vinclozolin on onions, raspberries, and ornamental plants. The product Vorlan (sold under EPA registration number 7969–85) would no longer be available, as this product is for use on ornamentals only. BASF made clear that the proposed use terminations were conditioned on EPA reestablishing the expired tolerance for vinclozolin use on succulent beans and granting a new tolerance associated with a canola registration. The cancellations were also conditioned on EPA accepting certain existing stock provisions. BASF requested that EPA waive the 180–day waiting period for EPA action on its use termination requests.

Under section 6(f)(1)(A) of FIFRA, registrants may request, at any time, that their pesticide registrations be amended to delete one or more pesticide uses. Section 6(f)(1)(B) of FIFRA requires that EPA provide a 30–day comment period on the request for voluntary cancellation. In addition, section

6(f)(1)(C) of FIFRA requires that EPA provide a 180–day comment period on a request for voluntary termination of any minor agricultural use before granting the request, unless the registrants request a waiver of the comment period, or the Administrator determines that continued use of the pesticide would pose an unreasonable adverse effect on the environment. The registrant has requested that EPA waive the 180–day comment period. In light of this request, EPA is granting the request to waive the 180–day comment period.

The following Table 1 specifies the time frame for the immediate cancellation and phase-out of several uses as requested by BASF. Commodities legally treated will be allowed in the channels of trade past the last date of legal use in accordance with FFDCA section 408(l)(5).

TABLE 1. — TIME FRAME FOR USECANCELLATION AND PROPOSED EXISTING STOCKS PROVISION

Commodity	Date of Use Cancellation Request	Last Date for Sale and Distribution of Existing Stocks	Last Date for Legal Use
Onions	July 15, 2000	January 1, 2001	September 30, 2001
Raspberries	July 15, 2000	January 1, 2001	September 30, 2001
Ornamentals	July 15, 2000	July 15, 2001	September 1, 2001
Kiwi 24(c)	December 31, 2001*	December 31, 2002	November 30, 2003
Chicory 24(c)	December 31, 2001*	December 31, 2002	November 30, 2003
Lettuce	July 15, 2004	July 15, 2005	September 30, 2005
Succulent beans	July 15, 2004	July 15, 2005	September 30, 2005

*BASF will inform the State of California that it can no longer support the 24(c) registrations by this date.

III. What is the Agency's Authority for Taking this Action?

Section 6(f)(1) of FIFRA provides that a registrant of a pesticide product may at any time request that any of its pesticide registrations be canceled. FIFRA further provides that, before acting on the request, EPA must publish a notice of receipt of any such request in the **Federal Register**. Thereafter, the Administrator may approve such a request.

IV. Procedures for Withdrawal of Request

Registrants who choose to withdraw a request for cancellation must submit such withdrawal in writing to the person listed under **FOR FURTHER INFORMATION CONTACT,** postmarked before October 20, 2000. This written withdrawal of the request for cancellation will apply only to the applicable FIFRA section 6(f)(1) request listed in this notice. If the product(s) have been subject to a previous cancellation action, the effective date of cancellation and all other provisions of any earlier cancellation action are controlling. The withdrawal request must also include a commitment to pay any reregistration fees due, and to fulfill any applicable unsatisfied data requirements.

V. Proposed Existing Stocks Provision

Pursuant to section 6(f) of FIFRA, EPA proposes to grant the requests for voluntary amendment and cancellation during the appropriate time frames identified in Table 1. For purposes of the cancellation order that the Agency proposes to issue at the close of the comment period for this announcement, the term ''existing stocks'' will be defined, pursuant to EPA's existing stocks policy at (56 FR 29362, June 26, 1991) (FRL 3846–4), as those stocks of a registered pesticide product which are currently in the United States and which have been packaged, labeled, and released for shipment prior to the effective date of the amendment or cancellation. Any distribution, sale, or use of existing stocks after the effective date of the cancellation order that the Agency intends to issue that is not consistent with the terms of that order will be considered a violation of section 12(a)(2)(K) and/or 12(a)(1)(A) of FIFRA.

A. Distribution or Sale by Registrants

If the requested use deletions are approved, the distribution or sale of such stocks by registrants will not be lawful under FIFRA after the sale and distribution dates listed in Table 1, except for the purposes of returns and relabeling, shipping such stocks for export consistent with the requirements of section 17 of FIFRA, or for proper disposal.

B. Distribution, Sale and Use by Other Persons

If the requested use deletions are approved, retailers, distributors, and end-users may sell, distribute, or use products with previously approved labeling which have been released for shipment until such supplies are exhausted or the last legal use date presented in Table 1.

List of Subjects

Environmental protection, Agricultural commodities, Pesticides and pests.

Dated: September 7, 2000.

Lois Rossi,

Director, Special Review and Reregistration Division, Office of Pesticide Programs.

[FR Doc. 00–23941 Filed 9–19–00]

BILLING CODE 6560–50–S

ENVIRONMENTAL PROTECTION AGENCY

[PF–946; FRL–6588–8]

Notice of Filing a Pesticide Petition to Establish an Exemption from The Requirement of a Tolerance for a Certain Pesticide Chemical in or on Food

AGENCY: Environmental Protection Agency (EPA).

ACTION: Notice.

SUMMARY: This notice announces the initial filing of a pesticide petition proposing the establishment of regulations to provide an exemption from the requirement of a tolerance for residues of a certain pesticide chemical in or on various food commodities.

DATES: Comments, identified by docket control number PF–946, must be received on or before October 20, 2000.

ADDRESSES: Comments may be submitted by mail, electronically, or in person. Please follow the detailed instructions for each method as provided in Unit I.C. of the ''SUPPLEMENTARY INFORMATION.'' To ensure proper receipt by EPA, it is imperative that you identify docket control number PF–946 in the subject line on the first page of your response.

FOR FURTHER INFORMATION CONTACT: By mail: Marshall Swindell, Antimicrobial Division (7510C), Office of Pesticide Programs, Environmental Protection Agency, 1200 Pennsylvania Ave., NW., Washington, DC 20460; telephone number: (703) 308–6341; e-mail address: swindell.marshall@epa.gov.

SUPPLEMENTARY INFORMATION:

I. General Information

A. Does this Action Apply to Me?

You may be affected by this action if you are an agricultural producer, food manufacturer or pesticide manufacturer. Potentially affected categories and entities may include, but are not limited to:

Categories	NAICS	Examples of potentially affected entities
Industry	111 112 311 32532	Crop production Animal production Food manufacturing Pesticide manufacturing

This listing is not intended to be exhaustive, but rather provides a guide for readers regarding entities likely to be affected by this action. Other types of entities not listed in the table could also be affected. The North American Industrial Classification System (NAICS) codes have been provided to assist you and others in determining whether or not this action might apply to certain entities. If you have questions regarding the applicability of this action to a particular entity, consult the person listed under ''FOR FURTHER INFORMATION CONTACT.''

B. How Can I Get Additional Information, Including Copies of this Document and Other Related Documents?

1. *Electronically.* You may obtain electronic copies of this document, and certain other related documents that might be available electronically, from the EPA Internet Home Page at http://www.epa.gov/. To access this document, on the Home Page select ''Laws and Regulations'' and then look up the entry for this document under the ''**Federal Register**—Environmental Documents.'' You can also go directly to the **Federal Register** listings at http://www.epa.gov/fedrgstr/.

2. *In person.* The Agency has established an official record for this action under docket control number PF–946. The official record consists of the documents specifically referenced in this action, any public comments received during an applicable comment period, and other information related to this action, including any information claimed as confidential business information (CBI). This official record includes the documents that are physically located in the docket, as well as the documents that are referenced in those documents. The public version of the official record does not include any information claimed as CBI. The public version of the official record, which includes printed, paper versions of any electronic comments submitted during an applicable comment period, is available for inspection in the Public Information and Records Integrity Branch (PIRIB), Rm. 119, Crystal Mall #2, 1921 Jefferson Davis Highway, Arlington, VA, from 8:30 a.m. to 4 p.m., Monday through Friday, excluding legal holidays. The PIRIB telephone number is (703) 305–5805.

C. How and to Whom Do I Submit Comments?

You may submit comments through the mail, in person, or electronically. To ensure proper receipt by EPA, it is imperative that you identify docket control number PF–946 in the subject line on the first page of your response.

1. *By mail.* Submit your comments to: Public Information and Records Integrity Branch (PIRIB), Information Resources and Services Division (7502C), Office of Pesticide Programs (OPP), Environmental Protection Agency, 1200 Pennsylvania Ave., NW., Washington, DC 20460.

2. *In person or by courier.* Deliver your comments to: Public Information and Records Integrity Branch (PIRIB), Information Resources and Services Division (7502C), Office of Pesticide Programs (OPP), Environmental Protection Agency, Rm. 119, Crystal Mall #2, 1921 Jefferson Davis Highway, Arlington, VA. The PIRIB is open from 8:30 a.m. to 4 p.m., Monday through Friday, excluding legal holidays. The PIRIB telephone number is (703) 305–5805.

3. *Electronically.* You may submit your comments electronically by e-mail to: *''opp-docket@epa.gov,''* or you can submit a computer disk as described above. Do not submit any information electronically that you consider to be CBI. Avoid the use of special characters and any form of encryption. Electronic submissions will be accepted in Wordperfect 6.1/8.0 or ASCII file format. All comments in electronic form must be identified by docket control number PF–946. Electronic comments may also be filed online at many Federal Depository Libraries.

D. How Should I Handle CBI That I Want to Submit to the Agency?

Do not submit any information electronically that you consider to be CBI. You may claim information that you submit to EPA in response to this document as CBI by marking any part or all of that information as CBI. Information so marked will not be disclosed except in accordance with procedures set forth in 40 CFR part 2. In addition to one complete version of the comment that includes any information claimed as CBI, a copy of the comment that does not contain the information claimed as CBI must be submitted for inclusion in the public version of the official record. Information not marked confidential will be included in the public version of the official record without prior notice. If you have any questions about CBI or the procedures for claiming CBI, please consult the person identified under **FOR FURTHER INFORMATION CONTACT**.

E. What Should I Consider as I Prepare My Comments for EPA?

You may find the following suggestions helpful for preparing your comments:

1. Explain your views as clearly as possible.
2. Describe any assumptions that you used.
3. Provide copies of any technical information and/or data you used that support your views.
4. If you estimate potential burden or costs, explain how you arrived at the estimate that you provide.
5. Provide specific examples to illustrate your concerns.
6. Make sure to submit your comments by the deadline in this notice.
7. To ensure proper receipt by EPA, be sure to identify the docket control number assigned to this action in the subject line on the first page of your response. You may also provide the name, date, and **Federal Register** citation.

II. What Action is the Agency Taking?

EPA has received a pesticide petition as follows proposing the establishment and/or amendment of regulations to

provide an exemption from the requirement of a tolerance for residues of a certain pesticide chemical in or on various food commodities under section 408 of the Federal Food, Drug, and Comestic Act (FFDCA), 21 U.S.C. 346a. EPA has determined that this petition contains data or information regarding the elements set forth in section 408(d)(2); however, EPA has not fully evaluated the sufficiency of the submitted data at this time or whether the data support granting of the petition. Additional data may be needed before EPA rules on the petition.

List of Subjects

Environmental protection, Agricultural commodities, Feed additives, Food additives, Pesticides and pests, Reporting and recordkeeping requirements.

Dated: September 5, 2000.

Frank Sanders,

Director, Antimicrobial Division, Office of Pesticide Programs.

Summary of Petition

The petitioner summary of the pesticide petition is printed below as required by section 408(d)(3) of the FFDCA. The summary of the petition was prepared by the petitioner and represents the view of the petitioners. EPA is publishing the petition summary verbatim without editing it in any way. The petition summary announces the availability of a description of the analytical methods available to EPA for the detection and measurement of the pesticide chemical residues or an explanation of why no such method is needed.

3M

0F6124

EPA has received a pesticide petition (0F6124) from 3M, St. Paul, MN 55144-1000, proposing, pursuant to section 408(d) of the Federal Food, Drug, and Cosmetic Act (FFDCA), 21 U.S.C. 346a(d), to amend 40 CFR part 180 to establish an exemption from the requirement of a tolerance in raw agricultural commodities and food for residues of zinc 2-pyridinethiol-oxide, used as a preservative in sponges (zinc-chitosan modified cellulose sponges). EPA has determined that the petition contains data or information regarding the elements set forth in section 408(d)(2) of the FFDCA. EPA has completed a preliminary evaluation of the aggregate exposure and risk in reviewing an assessment provided by 3M. EPA's findings have been made part of this notice, with attribution. However, EPA has not completed its evaluation of the sufficiency of the submitted data at this time or whether the data support granting of the petition. Additional data may be needed before EPA rules on the petition.

A. Residue Chemistry

1. *Sample extract preparation.* The amount of zinc pyrithione that can be extracted from a 3M sponge in typical use was determined as a preliminary step in estimating exposure and risk. The mean level of zinc pyrithione bound into the 3M sponge is 0.35% on a dry weight basis. New sponges measuring 114 x 71 x 20 millimeters (mm) were removed from their packages and rinsed a total of 10 times by completely saturating the sponges under running 43 °C tap water with hand wringing between saturations. Samples were then filled with tap water one final time and passed through a zero clearance wringer with rubber rolls having a Shore gage A hardness of 20–25. These preconditioning rinses were carried out to insure removal of softening agents from the sponge manufacturing process and to bring all samples to an equal final moisture content.

Each preconditioned sponge was placed in a separate pint size ziplock polyethylene plastic bag. Fifty milliliters (mL) of extraction solution were added and the bag sealed. Extraction solutions were deionized water and dilute solutions of dishwashing detergent. Three sponges were tested for each set of extraction conditions. Each bag was thoroughly agitated by repeated hand squeezing to insure uniform distribution of the extraction liquid throughout the sponge sample. For elevated temperatures, samples were then placed in an agitated temperature controlled water bath for an extraction period of 10 minutes. Room temperature samples were placed on the lab bench in a horizontal position for 10 minutes.

Following the 10 minute extraction period, the extraction liquid was recovered by hand squeezing liquid from the sponge back into its sample bag. The recovered liquid was then transferred into a clean 125 mL high density polyethylene sample bottle with screw top lids. The bottle was sealed until the sample was analyzed.

2. *Analysis of extracts.* Extract samples were analyzed for zinc ion using a Thermo Jarrell Ash model 61 E inductively coupled plasma (ICP) atomic emission spectrometer.

Each extract sample was transferred to a beaker and weighed to the nearest milligram (mg). The beaker was then placed on a hot plate and carefully evaporated to dryness. Then 2–3 mL of concentrated sulfuric acid was added to the beaker to digest any organic material in the sample. Concentrated nitric acid was added dropwise to oxidize any resulting charred organic matter. The acid solution was carefully transferred to a 50 mL volumetric flask and the beaker washed several times with deionized water which was added to the flask. The solution was diluted to the mark with deionized water and analyzed directly for zinc ion. Fresh zinc standards were prepared in the same acid matrix as the samples.

Although the analysis measures only zinc ion, it is assumed that the full zinc pyrithione moiety is removed from the sponge by the extraction solution. The zinc ion forms a coordination complex with the cellulose, as shown above, thereby binding the pyrithione anion into the cellulose structure. Loss of a zinc cation (2+) is, therefore, necessarily accompanied by loss of two pyrithione anions (1 −).

3. *Magnitude of residues.* The mean level of zinc pyrithione found using deionized water at 65 °C was 9.4 parts per million (ppm). In dish detergent solutions at the same temperature, mean levels were 12.4 ppm (0.1% detergent) and 26.8 ppm (1% detergent). For comparison purposes, certain samples were put through the sample preparation and extraction process three times. The amount of zinc pyrithione recovered was comparable in all three cycles. For ''worst case'' risk assessment purposes, the upper bound (95% probability) of highest mean value found for detergent extract solutions at 65 °C is used, i.e., ~30 parts per million (ppm). This extract solution contains 1% by weight dish detergent. A level of 0.1% or less is normally used for dishwashing.

The solubility of zinc pyrithione in water is known to increase with increasing detergent concentration. It has a very low solubility in pure water (15 to 20 ppm) but its solubility increases by complex formation with organic amines to near 300 ppm in very concentrated detergent such as shampoo base.

B. Toxicological Profile

In January 1996, EPA published its Reregistration Eligibility Decision (RED) for Sodium Omadine in which no observed adverse effect levels (NOAELs) and a reference dose (RfD) are formally selected. Sodium and zinc pyrithione have very similar toxicology profiles. The pyrithione anion is the biologically active moiety in either active ingredient. The pertinent toxicology endpoints are described below for zinc pyrithione

when studies on this test material are available. Otherwise endpoints were used from studies where sodium pyrithione was the test material. EPA, in its risk assessment for the 3M product, calculated RfD, given below, by applying various safety factors to the NOAELs.

1. *Acute toxicity*. Acute oral LD_{50} (rat) = 269 milligrams/kilograms (mg/kg) (male/female) for sodium pyrithione and 630 mg/kg (males) and 460 mg/kg (females) for zinc pyrithione. Acute dermal LD_{50} (rabbit) > 2,000 mg/kg for both sodium and zinc pyrithione. Acute inhalation LD_{50} (rat) = 0.61 milligram/liter (mg/L) (4–hour) for sodium pyrithione and > 0.61 mg/L for zinc pyrithione. Sodium pyrithione is a mild irritant to skin and eyes, and it is not a sensitizer. Zinc pyrithione is corrosive to skin and eyes, and it is not a sensitizer.

2. *Genotoxicty*. *In vitro* and *in vivo* tests indicate that sodium and zinc pyrithione are not genotoxic.

3. *Reproductive and developmental toxicity*. Technical grade zinc pyrithione active ingredient was administered by gavage at doses of 0, 7.5 and 15 mg/kg to Charles River albino rats. Maternal body weight gain depression was observed. A lowest observed adverse effect level (LOAEL) of 7.5 mg/kg was found. There was an increased incidence of skeletal abnormalities at the maternally toxic high dose level (15 mg/kg). In a separate study using sodium pyrithione, NOAEL = 5 mg/kg/day.

In a study using 30 pregnant Sprague-Dawley rats per group, zinc pyrithione was administered by oral gavage on days 6–15 of gestation at 0, 0.75, 3, and 15 mg/kg/day. One dam died on gestation day 16. Developmental toxicity was observed as an increase in postimplantation loss at mid and high dose levels. The high dose group was significantly different than controls ($p \leq 0.01$). An increase in early resorptions (3.6%/dam) was observed with whole litter resorption occurring in 3 high dose dams. In the 15 mg/kg/day group, the number of live fetuses per litter was significantly reduced ($p \leq 0.05$), mean fetal weights were reduced (16%), and gravid uterine weights were reduced (16%; $p \leq 0.01$) when compared to controls.

A significant number of fetuses were found to have external, visceral, or skeletal malformations at the 15 mg/kg/day group: digit anomalies at $p \leq 0.05$; dilated renal pelvis at $p \leq 0.05$; and a verbal/rib anomaly at $p \leq 0.01$. Dose-related fused ribs were observed at 3.0 and 15 mg/kg/day levels. The maternal toxicity NOAEL for the study was 0.75 mg/kg/day, based on excessive salivation during the dosing period, and the developmental toxicity NOAEL was 0.75 mg/kg/day based on increased incidences of fused ribs.

Another study used 20 white New Zealand rabbits per groups and oral gavage doses of 0, 0.5, 1.5, and 3.0 mg/kg/day of zinc pyrithione on gestation days 6–18. A significant decrease in body weight ($p \leq 0.01$) was observed for mid and high-dose groups, but the absolute body weight changes were small. Five high-dose does and one mid-dose doe had total resorption. One high-dose doe aborted on day 27. No statistically significant differences were observed in anomalies for treated groups compared to controls. The maternal/developmental NOAEL was 0.5 mg/kg/day.

Based upon the above studies, EPA considers zinc pyrithione to be a frank developmental toxicant.

4. *Subchronic toxicity*. Technical grade zinc pyrithione was administered in the diet to 20 male and 20 female Charles River CD albino rats per dose group at 5, 25 and 125 ppm for up to 93 days. No mortality occurred at 5 or 25 ppm; significant mortality at 125 ppm (39 out of 40). Slight growth rate depression was observed in the 25 ppm group. No significant treatment-related biochemical or histopathological finding were made at 5 or 25 ppm. NOAEL = 25 ppm (~ 2.5 mg/kg/day).

Six Rhesus monkeys per dose group were administered a 1% suspension in gum tragacanth by gavage at does of 0.5, 2.0 and 8.0 mg/kg for 90 days. All animals appeared normal. Emesis was observed on days 1 and 2 in intermediate and high dose groups and not again throughout the study. No treatment-related gross or microscopic pathology was observed. There was a statistically significant decrease in the weights of uteri in high dose females.

Clinical signs, including hind limb weakness, motor incoordination and spinal kyphosus with muscle atrophy, were observed at the high dose in a neurotoxicity study in Charles River CD rats where zinc pyrithione was administered at 0 and 250 ppm for 9 or 14 days, followed by a 14- to 28-day recovery period. Clinical signs did not persist during the recovery period. Histopathology revealed dense granular axoplasmic deposits in the axons of sural and intramuscular lumbrical nerves. Normal muscle morphology was observed in the acutely affected rats. In a separate study using sodium pyrithione as a test material, neurotoxicity end points were as follows: lowest observed adverse effect level (LOAEL) = 2.0 mg/kg/day; NOAEL = 0.5 mg/kg/day.

Male and female Crl:CD(SD)BR rats were treated with zinc pyrithione using occluded dermal doses at 0, 20, 100, and, 1,000 mg/kg/day for 6 hours/day for 5/days/week for 13 weeks. Females in the high dose group exhibited decreased food consumption (91.6% of control), decreased body weight gain (48.9% of control), and decreased food efficiency (53.8% of control) for the period of treatment. The systemic NOAEL in females was 100 mg/kg/day and in males 1,000 mg/kg/day.

Groups of 15 male and 15 female Sprague-Dawley rats were tested in whole-body inhalation exposure chambers to zinc pyrithione aerosols at 0.005, 0.0025, or 0.01 mg/L/for 6 hours/day, 5 days/week for 13 weeks. One animal of each sex died at the 0.0025 mg/L/day level. Three males and four females died at the 0.01 mg/L/day exposure level. Decreased body weights, food consumption and food efficiency were observed at the highest dose. Significantly increased lung weights were noted at the mid and high dose. Mild inflammation of the interstitial tissue of the lung and medial hypertrophy of pulmonary arteries was found at the high dose. The systemic NOAEL was 0.005 mg/L/day.

5. *Chronic toxicity*. Zinc pyrithione was administered in the diet at doses of 0, 2, 5, 10, 25, and 50 ppm to groups of 10 male and 10 female albino rats for 2 years. There were no adverse effects on survival of the males. Decreased survival of the females in the 25 and 50 ppm dose groups and accelerated growth rate in females in lower dose groups were observed. Males in the 50 ppm group also were observed to have accelerated growth. No treatment-related biochemical or histopathological effects were noted. NOAEL = 10 ppm, or 0.5 mg/kg/day.

For sodium pyrithione, EPA has established in the RED a RfD of 0.005 mg/kg/day based upon a chronic rat study NOAEL of 0.5 mg/kg/day and an uncertainty factor of 100.

6. *Animal metabolism*. Three older animal metabolism studies are available for zinc pyrithione. In two studies radio labeled material is administered by intravenous injection and in one study oral dosing is used. In an intravenous study in Yorkshire pigs, ^{14}C-labeled sodium and zinc pyrithione are compared. For both compounds, urine appears to be the major route of excretion for the administered radio label. Significantly less radio label was recovered in the urine for the zinc salt than the sodium salt, as expected because the zinc salt has a very low

solubility in water. Presumably insoluble salt in the blood was captured and eliminated through the bile duct into the feces. In a study in which ^{14}C-zinc pyrithione or ^{65}Zn-zinc pyrithione were administered intravenously to rabbits, the animals were sacrificed at 6 hours after dosing and levels of radio label determined in urine, tissue and blood. The ^{14}C-labeled pyrithione was substantially excreted (75%) in the urine, but the ^{65}Zn remained relatively constant in the blood and tissue. The retention of zinc is expected because it readily forms coordination complexes with biochemical molecules and it is also an essential trace element in the diet, being present naturally in significant amounts in food, tissue and blood.

When ^{14}C-labeled zinc pyrithione was administered by the oral route to Sprague-Dawley rats, most of the radio labeled material (up to 84%) was excreted through the urine and the feces (up to 21%). Male rats appeared to metabolize and excrete zinc pyrithione more rapidly than female rats.

7. *Endocrine disruption*. There is no evidence to suggest that the active ingredient has an effect on any endocrine system. Developmental toxicity tests using both zinc and sodium pyrithione showed no evidence of maternal or fetal toxicity except at the limit dose. In a 2–generation reproduction study in Crl:CD(SD)BR rats in which sodium pyrithione was administered by gavage, a parental NOAEL of 0.5 mg/kg/day and a reproductive NOAEL of 1.5 mg/kg/day were established. At maternally toxic doses, a slightly decreased number of pups were born per litter in both generations, possibly as a consequence of reduced mating success due to hind limb atrophy.

C. Aggregate Exposure

The risk analysis for the use of 3M sponges includes estimates of total exposure to zinc and sodium pyrithione in all their uses registered by EPA or approved by FDA, not just sponges. The use of zinc pyrithione as a popular active ingredient in dandruff shampoos is of particular importance because it involves direct application to human skin. The analysis also includes four different sets of exposure assumptions:

A realistic adverse case exposure scenario.
A worst case exposure scenario.
A highly exaggerated worst case set of assumptions.
EPA's exposure assumptions.

Even the realistic adverse case assessment hugely overestimates exposure and can therefore, be considered to provide an absolute upper bound exposure estimate. The worst case and exaggerated worst case scenarios include a number of obviously even more unreasonable assumptions designed simply to test the sensitivity of the realistic adverse case numbers to changing assumptions.

Various routes of exposure that could result from use of the sponge are considered in the analyses, as follows:

Ingestion
Incidental residues in food from the use of the sponge in home kitchens.
Contaminated drinking water.
Use of sponges for teething for a lifetime (EPA's analysis only).

Per cutaneous absorption
Dermal contact with sponges and dishwater.

Exposure to sodium and zinc pyrithione that do not result from the use of the sponge but are included in the analyses are as follows:

Per cutaneous absorption

Dandruff shampoo.
Additive for plastics, adhesives, grouts, caulking, paints, yarns and fabrics.

All components of 3M's aggregate exposure analysis are summarized below and the methods and assumptions used in calculating the numbers are discussed in detail. In summary, huge margins of safety were found, as expected, when exposures were compared to the established NOELs and NOAELs.

In EPA's own analysis, dietary exposures were compared to the acute and chronic RfDs for zinc pyrithione. An acute RfD for zinc pyrithione was set at 0.005 mg/kg/day using an uncertainty factor (UF) of 100 and the lowest observed NOAEL of 0.5 mg/kg/day from a subchronic dietary exposure study described above. A chronic RfD of 0.0005 mg/kg/day was calculated using the NOAEL of 0.5 mg/kg/day from the developmental toxicity study in the rat described above and an UF of 1,000. The additional UF of 10 was included by EPA for protection of infants and children. The subchronic study was used, rather than available chronic dietary toxicity study in rats, because the chronic study was determined by EPA not to meet current guidelines. The Agency intends to ask for a new study. Although an acceptable chronic study is available for sodium pyrithione and a RfD of 0.005 mg/kg/day has been established for this sodium salt based on those data, EPA determined that sodium pyrithione cannot be used as a surrogate for assessing the risks posed by sponges containing the zinc salt.

1. *Dietary exposure*. Use of the 3M sponge by institutions is considered by EPA to be a food use of a pesticide, requiring a tolerance or exemption from a tolerance. In assessing aggregate risk, two incidental ways in which low level residues in food might originate have been considered. First, the worst case and exaggerated worst case assessments assume that all dishes used for service of food and beverages are hand washed (i.e., no dishwashers) in water with dish detergent using a 3M sponge. Furthermore, the dishes are never rinsed, thereby leaving a slight residue of zinc pyrithione on the surface of each dish that may become a component of food. The realistic adverse case assumes that the normal practice of rinsing dishes after washing is followed, thereby eliminating dishes as a source of residues in food.

The second way in which residues in food might originate is from contact with counters that have been cleaned with dishwater containing trace levels of zinc pyrithione. A discussion of the assumptions used in assessing exposure from counters can be found below. Dietary exposure is assumed to occur also, for the purpose of aggregate exposure and risk assessment, through drinking water containing minute levels of zinc pyrithione originating from home dishwater effluent discharged to publicly owned water treatment systems. Again, the assumptions behind the assessment are discussed below.

EPA added a scenario in which children may become exposed to zinc pyrithione through chewing sponges while teething. Incidental ingestion exposures were calculated for infants using a formula for foreign object/matter non-dietary ingestion as set forth in EPA's Occupational and Residential Exposure Test Guidelines, Series 875, Part D—Exposure and Risk Assessment Calculations, Test Guideline No. 875.2900. Assuming children will teeth on sponges for a lifetime, EPA calculated that the margin of exposure (MOE) was acceptable.

For other dietary exposures, EPA assumed 3M's exaggerated worst case scenario.

i. *Food-incidental residues from dishes*. 3M's analysis begins by assuming that all dishes are washed by hand using a sponge and that the same amount of zinc pyrithione is extracted from the sponge by dishwater every time. The amounts assumed from the extraction study are 12.4 ppm (adverse and worst case) and 29.6 ppm (exaggerated worst case). The extraction study was designed to estimate the total amount of zinc pyrithione that might be extracted from a sponge during a single use. A 50 mL volume of extract was used for convenience. A mean extract

concentration of 12.4 ppm in 50 mL, used for the realistic adverse case and worst case analyses, results from vigorous extraction of the sponge with 50 ml of 0.1% dish detergent in water at 65 °C, much hotter than normal dishwater, thereby releasing 0.62 mg of zinc pyrithione. A 95% upper bound estimate for extraction with 1.0% dish detergent in water at 65 °C is used for the exaggerated worst case calculations, wherein 1.48 mg are released. Informal measurements of the amount of detergent necessary to make a quite sudsy dishwater demonstrate that less than 0.1% by weight is needed. The analysis also assumes that the average volume of water used each time a load of dishes are washed is 10 liters. Hence, a dilution factor of 200 is applied to the concentration of the original extract. If it were assumed that the entire volume of dish water has the same concentration of zinc pyrithione as the experimental extract, the amount in solution would substantially exceed the original active ingredient in the sponge.

For the worst case and exaggerated worst case analyses, it is assumed, based on gravimetric measurements, that 0.25 mL of dishwater, on the average, remains uniformly distributed over the surface of a drained but not rinsed plate or cup. It is also assumed that food or drink acquires the entire amount of residue from one side (50% of the surface area) of each plate or cup and that on an average each person uses a total of 12 plates and cups a day. For the realistic adverse case it is assumed that the plates and cups are rinsed free of dishwater, a normal practice, and therefore, have no residual zinc pyrithione to transfer to food.

a. *Incidental residues from counters and other surfaces*. It is assumed that the same dishwater is also used to wash counters and other surfaces that may come in contact with solid foods. A wet residue level of 1 mg/cm^2 is applied in the analysis, in keeping with the value used by FDA for the amount of non-rinsed sanitizing solutions remaining on cleaned dishes, cups and counters in, for example, a bar. Also borrowing from FDA, it is assumed that 1.55 g/cm^2 of food contacts the counter and that an individual consumes 3,000 g of food total per day, 50% of which is solids. These figures are used by FDA for assessments involving packaged food and drink products. An uncut apple or tomato placed on a counter, for example, might be expected to have a much higher weight to area value.

In the realistic adverse case, it is assumed that 50% of all solid food consumed by an individual comes into contact with a counter cleaned with dishwater as described above and that the food absorbs all the available zinc pyrithione residue. In the worst case and exaggerated worst case analyses, it is assumed that 100% of the solid food consumed by an individual has contact with a counter or other surface containing zinc pyrithione residues and absorbs all those residues.

b. *EPA analysis*. In terms of exposure, EPA assumed 3M's exaggerated worst case scenario and added to it the assumption that infants would use sponges for teething for a lifetime. Both acute and chronic dietary risks were calculated using somewhat different assumptions for body weights, consumption amounts, and lifetime exposure durations. The risk calculations were also broken down for the U.S. population, females 13 and older, and infants and children. The smallest margin of exposure (MOE), calculated by EPA was for chronic (lifetime) exposure to infants and children at 2,673, with the overall chronic MOE for the U.S. population calculated to be 138,121.

ii. *Drinking water*. A number of obvious worst case assumptions were made in estimating potential exposure to zinc pyrithione in drinking water from use of the 3M sponge. A figure of 157 gallons was used for the average water usage per person per day, and the average publicly owned treatment works (POTW) was assumed to treat 1.45 x 10^6 gallons per day and serve a population of 9,200 persons. It was assumed that every household hand washes all dishes (no dishwashers) and that every time dishes are washed a sponge is used. It is also assumed that each household does one load of dishes per person per day. The extraction levels used above for zinc pyrithione are applied in this analysis as well.

Other than in the amount of extract, the three cases analyzed differ in assumptions regarding which sponge is used and the amount of dilution of POTW effluent by receiving waters. In the realistic adverse case, it is assumed that 20% of the sponges used each day are new. This assumption means that sponges are replaced on the average every 5 days, rather than the 6 to 8 weeks normally found by consumer research. The replacement figure increases to 50% and 100% for the worst case and exaggerated worst case respectively. Used sponges are assumed to release minimal zinc pyrithione to dishwater. It is also assumed that 60%, 80% and 100% of all households use the 3M sponge in going from the realistic adverse case to the exaggerated worst case. The amount by weight of zinc pyrithione extracted from the sponge during each washing is calculated and assumed to be discharged to the POTW with each persons daily allotment of water. The POTW is assumed to remove none of the zinc pyrithione before the water effluent is discharged. The effluent is assumed to be diluted to a minimal degree by receiving waters and these same waters are assumed to be returned to the community as drinking water, with the level of zinc pyrithione conserved throughout the cycle. Furthermore, every individual is assumed to consume only tap water as a beverage (*i.e.*, no packaged drinks such as soda, milk, bottled water, prepackaged infant formula).

Using a different approach wherein a drinking water level of comparison (DWLOC) is calculated, EPA concluded without explanation that the concern for drinking water exposures should be higher than calculated by 3M. The DWLOC is the concentration of a pesticide in drinking water that would produce an unacceptable aggregate risk, considering all other food and non-occupational exposures. EPA calculated acute DWLOCs for the U.S. population, for females 13 and older, and for infants and children of 174 parts per billion (ppb), 174 ppb, and 50 ppb, respectively. Chronic DWLOCs were calculated to be 84 ppb, 84 ppb, and 20 ppb, respectively, for the same subpopulations. 3M calculated, as described above and summarized in Table 5, below zinc pyrithione levels of 0.03 to 1.25 ppb using extremely conservative assumptions. 3M's uppermost value comes from a scenario that uses the upper 95% probability bound leachate value for sponges extracted in high temperature water containing extreme levels of detergent. The scenario also assumes that 100% of the U.S. population uses a new sponge every time dishes are washed and that the wash water is recycled as drinking water with only a 2x dilution factor. If water usage is 157 gallons per individual per day, and dishwater were recycled directly, each sink of dishwater would need to be diluted by a factor of 100 or more to supply the requisite amount of water.

2. *Non-dietary exposure*—i. Dermal absorption from dishwashing. To estimate the potential dermal dose of zinc pyrithione associated with use of the sponge during dishwashing, it was assumed that an adult will immerse both hands and one-half of their forearms in dishwater for a total of 1–hour per day. Again the concentration of zinc pyrithione in the dishwater was varied from case-to-case, as described earlier. Dermal permeability and

absorbed amount were calculated using methods recommended by EPA.

ii. *Per cutaneous absorption from dandruff shampoo.* Information on the absorption of zinc pyrithione from the use of dandruff shampoos was obtained from FDA's docket supporting formal rulemaking leading to a monograph establishing conditions under which over-the-counter drug products for the control of dandruff, seborrheic dermatitis, and psoriasis are ''generally recognized as safe and effective.'' In a study involving 30 human subjects, a shampoo containing radio labeled zinc pyrithione (^{14}C in the 2- and 6-positions) was applied in both a sink shampoo procedure (head exposure only) and a shower shampoo (total body exposure). All wash water and towels, etc. were retained and biological samples of skin, hair, blood and urine collected for a period of ten days following application. Recovery of radio label was essentially 100%.

An average upper level systemic load of zinc pyrithione was calculated from the urinary output data to be 1 µg/kg/day. Absorption was greatest for subjects with seborrheic dermatitis, and the absorbed material was derived from solid zinc pyrithione deposited on the head, rather than from the soluble zinc pyrithione complexed with detergent in the commercial shampoo.

For this aggregate exposure analysis, in the realistic adverse case it was assumed that all persons have chronic dandruff and use a dandruff shampoo every day, absorbing the maximum dose of the active ingredient. In the worst case and exaggerated worst case, it is assumed that all persons have seborrheic dermatitis and use the dandruff shampoo every day for life (i.e., the treatment has no curative effect on the seborrheic dermatitis). It was also assumed that infants and small children do not use dandruff shampoo on a regular basis. Using these assumptions, exposure from use of zinc pyrithione in dandruff shampoo was found to be three orders of magnitude higher than exposure from all other uses of zinc pyrithione.

EPA assumed 3% dermal absorption of zinc pyrithione for non-dietary exposures. In contrast, for assessments involving dermal exposure to sodium pyrithione, the Agency has used an absorption value of 0.1% in risk assessments. In its assessment of aggregate risk for the sponge, EPA did not consider exposures through the use of dandruff shampoos containing zinc pyrithione.

D. Cumulative Effects

It is 3M's position that zinc pyrithione should not be expected to have any effects cumulative with any other substances. It is EPA's position that the Agency ''does not at this time have the methodology to resolve scientific issues concerning common mechanisms of toxicity.'' Hence, for the time being EPA has not assumed that zinc pyrithione has a common mechanism of toxicity with other substances.

E. Safety Determination

1. *U.S. population.* EPA has established an oral NOAEL for zinc pyrithione of 0.5 mg/kg/day based upon a chronic rat study. This value is confirmed in the NOAEL for a subchronic neurotoxicity study and a 2–generation reproduction study. Using a substantial number of high exposure assumptions, the absolute upper limit exposure to zinc pyrithione was calculated for all uses in the realistic adverse case presented above. When exposure to zinc pyrithione through daily lifetime use of dandruff shampoo is included, a minimum adult MOE of 128,000 was found, with total aggregate exposure at 7.81×10^{-4} mg/kg/day. The exposure from the assumed daily use of dandruff shampoo is huge compared to the aggregate adult exposure from use of zinc pyrithione in sponges. Total adult exposure (oral + dermal) not counting shampoo is 1.20×10^{-6} mg/kg/day. The maximum possible daily intake of zinc pyrithione for all uses other than shampoo was calculated to yield an aggregate adult MOE of over 400,000, assuming an individual does not routinely (i.e., daily) use dandruff shampoo (see Table 2).

2. *Infants and children.* Aggregate exposure to children was determined by adjusting the assumptions used for adults. The assessment was designed to examine exposure for non-nursing infants, the subpopulation that most often is calculated to have the highest exposure to pesticides in the diet in EPA's own assessments for most chemicals.

In this assessment, it was assumed that the dietary consumption of food and water by infants was 2.5 times more per kg of body weight than for adults. Because a large portion of an infant's diet is liquids, the additional assumption was made that a smaller portion of the diet for infants than adults would be exposed to counters and other surfaces washed with dishwater. Therefore, absorption of zinc pyrithione from washed surfaces would be expected to be less. Non-nursing infants are also not expected to wash dishes or use dandruff shampoo on a regular basis, eliminating these routes of exposure. Maximum possible aggregate dietary exposure for non-nursing infants is calculated to be 1.92×10^{-6} mg/kg/day, yielding an MOE of 260,000, far in excess of the 1,000 fold safety factor applied by EPA in its assessment to calculate an RfD. The use of sponges for teething for a lifetime, which EPA included in its assessments, was not considered.

F. International Tolerances

No international tolerances have been issued for the use of zinc pyrithione as a preservative in cellulose sponges.

[FR Doc. 00–24210 Filed 9–19–00; 8:45 am]

BILLING CODE 6560–50–F

ENVIRONMENTAL PROTECTION AGENCY

[PF–974; FRL–6742–7]

Notice of Filing a Pesticide Petition to Establish a Tolerance for a Certain Pesticide Chemical in or on Food

AGENCY: Environmental Protection Agency (EPA).

ACTION: Notice.

SUMMARY: This notice announces the initial filing of a pesticide petition proposing the establishment of regulations for residues of a certain pesticide chemical in or on various food commodities.

DATES: Comments, identified by docket control number PF–974, must be received on or before October 20, 2000.

ADDRESSES: Comments may be submitted by mail, electronically, or in person. Please follow the detailed instructions for each method as provided in Unit I.C. of the **SUPPLEMENTARY INFORMATION**. To ensure proper receipt by EPA, it is imperative that you identify docket control number PF–974 in the subject line on the first page of your response.

FOR FURTHER INFORMATION CONTACT: By mail: James Tompkins, Herbicide Branch, Registration Division (7505W), Office of Pesticide Programs, Environmental Protection Agency, 1200 Pennsylvania Ave., NW., Washington, DC 20460; telephone number: (703) 305–5697; e-mail address: tompkins.jim@epa.gov.

SUPPLEMENTARY INFORMATION:

I. General Information

A. Does this Action Apply to Me?

You may be affected by this action if you are an agricultural producer, food

manufacturer or pesticide manufacturer. Potentially affected categories and entities may include, but are not limited to:

Categories	NAICS	Examples of potentially affected entities
Industry	111 112 311 32532	Crop production Animal production Food manufacturing Pesticide manufacturing

This listing is not intended to be exhaustive, but rather provides a guide for readers regarding entities likely to be affected by this action. Other types of entities not listed in the table could also be affected. The North American Industrial Classification System (NAICS) codes have been provided to assist you and others in determining whether or not this action might apply to certain entities. If you have questions regarding the applicability of this action to a particular entity, consult the person listed under **FOR FURTHER INFORMATION CONTACT**.

B. How Can I Get Additional Information, Including Copies of this Document and Other Related Documents?

1. *Electronically*. You may obtain electronic copies of this document, and certain other related documents that might be available electronically, from the EPA Internet Home Page at http://www.epa.gov/. To access this document, on the Home Page select ''Laws and Regulations,'' ''Regulations and Proposed Rules,'' and then look up the entry for this document under the ''**Federal Register**—Environmental Documents.'' You can also go directly to the **Federal Register** listings at http://www.epa.gov/fedrgstr/.

2. *In person*. The Agency has established an official record for this action under docket control number PF–974. The official record consists of the documents specifically referenced in this action, any public comments received during an applicable comment period, and other information related to this action, including any information claimed as confidential business information (CBI). This official record includes the documents that are physically located in the docket, as well as the documents that are referenced in those documents. The public version of the official record does not include any information claimed as CBI. The public version of the official record, which includes printed, paper versions of any electronic comments submitted during an applicable comment period, is available for inspection in the Public Information and Records Integrity Branch (PIRIB), Rm. 119, Crystal Mall #2, 1921 Jefferson Davis Highway, Arlington, VA, from 8:30 a.m. to 4 p.m., Monday through Friday, excluding legal holidays. The PIRIB telephone number is (703) 305–5805.

C. How and to Whom Do I Submit Comments?

You may submit comments through the mail, in person, or electronically. To ensure proper receipt by EPA, it is imperative that you identify docket control number PF–974 in the subject line on the first page of your response.

1. *By mail*. Submit your comments to: Public Information and Records Integrity Branch (PIRIB), Information Resources and Services Division (7502C), Office of Pesticide Programs (OPP), Environmental Protection Agency, 1200 Pennsylvania Ave., NW., Washington, DC 20460.

2. *In person or by courier*. Deliver your comments to: Public Information and Records Integrity Branch (PIRIB), Information Resources and Services Division (7502C), Office of Pesticide Programs (OPP), Environmental Protection Agency, Rm. 119, Crystal Mall #2, 1921 Jefferson Davis Highway, Arlington, VA. The PIRIB is open from 8:30 a.m. to 4 p.m., Monday through Friday, excluding legal holidays. The PIRIB telephone number is (703) 305–5805.

3. *Electronically*. You may submit your comments electronically by e-mail to: opp-docket@epa.gov, or you can submit a computer disk as described above. Do not submit any information electronically that you consider to be CBI. Avoid the use of special characters and any form of encryption. Electronic submissions will be accepted in Wordperfect 6.1/8.0 or ASCII file format. All comments in electronic form must be identified by docket control number PF–974. Electronic comments may also be filed online at many Federal Depository Libraries.

D. How Should I Handle CBI That I Want to Submit to the Agency?

Do not submit any information electronically that you consider to be CBI. You may claim information that you submit to EPA in response to this document as CBI by marking any part or all of that information as CBI. Information so marked will not be disclosed except in accordance with procedures set forth in 40 CFR part 2. In addition to one complete version of the comment that includes any information claimed as CBI, a copy of the comment that does not contain the information claimed as CBI must be submitted for inclusion in the public version of the official record. Information not marked confidential will be included in the public version of the official record without prior notice. If you have any questions about CBI or the procedures for claiming CBI, please consult the person identified under **FOR FURTHER INFORMATION CONTACT**.

E. What Should I Consider as I Prepare My Comments for EPA?

You may find the following suggestions helpful for preparing your comments:

1. Explain your views as clearly as possible.

2. Describe any assumptions that you used.

3. Provide copies of any technical information and/or data you used that support your views.

4. If you estimate potential burden or costs, explain how you arrived at the estimate that you provide.

5. Provide specific examples to illustrate your concerns.

6. Make sure to submit your comments by the deadline in this notice.

7. To ensure proper receipt by EPA, be sure to identify the docket control number assigned to this action in the subject line on the first page of your response. You may also provide the name, date, and **Federal Register** citation.

II. What Action is the Agency Taking?

EPA has received a pesticide petition as follows proposing the establishment and/or amendment of regulations for residues of a certain pesticide chemical in or on various food commodities under section 408 of the Federal Food, Drug, and Comestic Act (FFDCA), 21 U.S.C. 346a. EPA has determined that this petition contains data or information regarding the elements set forth in section 408(d)(2); however, EPA has not fully evaluated the sufficiency of the submitted data at this time or whether the data support granting of the petition. Additional data may be needed before EPA rules on the petition.

List of Subjects

Environmental protection, Agricultural commodities, Feed additives, Food additives, Pesticides and pests, Reporting and recordkeeping requirements.

Dated: September 11, 2000.

James Jones,

Director, Registration Division, Office of Pesticide Programs.

Summary of Petition

The petitioner summary of the pesticide petition is printed below as required by section 408(d)(3) of the FFDCA. The summary of the petition was prepared by the petitioner and represents the view of the petitioners. EPA is publishing the petition summary verbatim without editing it in any way. The petition summary announces the availability of a description of the analytical methods available to EPA for the detection and measurement of the pesticide chemical residues or an explanation of why no such method is needed.

Valent U.S.A. Corporation

PP 9F6044

EPA has received a pesticide petition (PP 9F6044) from Valent U.S.A. Corporation at 1333 North California Boulevard, Suite 600, Walnut Creek, CA 94596–8025 as agent for K-I Chemical U.S.A. Inc. proposing, pursuant to section 408(d) of the FFDCA, 21 U.S.C. 346a(d), to amend 40 CFR part 180 by establishing a tolerance for residues of bispyribac-sodium, sodium 2,6-bis [(4,6-dimethoxypyrimidin-2yl)oxy]benzoate in or on the raw agricultural commodities (RAC) rice grain, and rice straw at 0.02 parts per million (ppm). EPA has determined that the petition contains data or information regarding the elements set forth in section 408(d)(2) of the FFDCA; however, EPA has not fully evaluated the sufficiency of the submitted data at this time or whether the data support granting of the petition. Additional data may be needed before EPA rules on the petition.

A. Residue Chemistry

Summary. Radiocarbon plant and animal metabolism studies have demonstrated that the residue of concern is best defined as parent, bispyribac-sodium. Practical, validated enforcement residue methodology is available to analyze all appropriate matrices for bispyribac-sodium residue with limit of quantitation (LOQ) of 0.02 ppm, adequate to enforce all proposed tolerances. The magnitude of residues of bispyribac-sodium has been evaluated in rice grain, rice straw, and in the appropriate processed products. Finite residues in fed ruminants, and poultry are not expected. These studies are adequate to support appropriate tolerances and dietary risk analyses.

1. *Plant and animal metabolism*. Rice plants extensively metabolize bispyribac-sodium and the terminal residues in the RAC are low. Application of radio labeled bispyribac-sodium to 5–6 leaf rice resulted in total radiocarbon residues (TRR) of 0.007 and 0.021 ppm (bispyribac-sodium equivalents) in mature rice grain and 0.116 and 0.274 ppm in mature rice straw in the [pyrimidine-2–^{14}C] and [U–^{14}C-benzene] metabolism studies, respectively.

No parent or parent related metabolites were detected in grain with much of the grain radioactivity incorporated into starch. Bispyribac-sodium was detected in straw at 0.010 and 0.042 ppm in the [pyrimidine-2–^{14}C] and [U–^{14}C-benzene] metabolism studies, respectively. The maximum residue values for the metabolites that were found in straw are:

- BX–180 (0.024 ppm)
- Me2BA (0.006 ppm)
- DesMe–180 (0.002 ppm)
- DesMe–2023 (0.001 ppm)

No single metabolite in rice straw was greater than 10% of the total radiocarbon residues, and all of the aglycones identified in rice straw were also identified in the rat metabolism study.

Bispyribac-sodium is extensively metabolized and rapidly excreted by lactating goats. Treatment was at highly exaggerated feeding levels (11 ppm) relative to the proposed 0.02 ppm rice grain and straw tolerances. These study feeding levels correspond to more than 650 times the tolerance level dietary burden for goats (using cattle diet values). Even at this exaggerated treatment level the total radioactive residue TRR concentrations in milk were extremely low (0.002 ppm, bispyribac-sodium equivalents).

The edible tissue concentrations (bispyribac-sodium equivalents) indicate the very low bioaccumulation potential of bispyribac-sodium residues:

- Muscle (0.002 ppm)
- Fat (<0.003 ppm)
- Kidney (<0.041 ppm)
- Liver (<0.204 ppm)

The metabolites identified in goat liver and kidney were:

- Glucuronide conjugates of bispyribac-sodium
- Me_2BA
- BX–180
- 2,6–DBA
- Me_2BA
- DesMe–180

All the metabolites are polar and easily excreted. Based on the low concentrations of metabolites in goat milk and tissues from the exaggerated doses used in the ruminant metabolism study, residues expected in milk and edible tissue from a tolerance level (1X) feed intake of bispyribac-sodium are extremely low (<<0.02 ppm). Thus, there is no reasonable expectation of finite secondary residues in meat, meat by-products, or milk, and tolerances are not necessary.

Laying hens were treated with radiocarbon labeled bispyribac-sodium in their diets at 12 ppm. This high feeding level represents 600 times the maximum theoretical dietary burden. The TRR concentrations in radiocarbon bispyribac-sodium equivalents in most tissues and eggs were very low—0.009 ppm in muscle, 0.016 ppm in fat and eggs. TRR concentration in hen liver was much higher, 4.98 ppm, virtually all of which was unconjugated bispyribac (4.82 ppm). Based on the low concentrations of metabolites in eggs and most tissues from the exaggerated doses used in the hen metabolism study, residues anticipated in eggs, and edible tissue from a tolerance level (1X) feed intake of bispyribac-sodium are extremely low (<<0.005 ppm). In chicken liver, the tissue with the highest radiocarbon content, maximum theoretical residues are still well below the enforcement LOQ of 0.02 ppm. Finite residues were not detected in rice grain samples from any of the field residue trials. The limit of detection (LOD) of the method was determined by statistical analysis of instrument responses in untreated versus treated field samples. The LOD for rice grain and bran is 0.001 ppm with 0.005 ppm for hulls. Even at 2X application rates, residues in rice grain were not detected. Assuming anticipated residues in rice derived poultry feed at half the LOD from the field residue samples, gives a maximum anticipated dietary burden for poultry of 0.0008 ppm, and maximum residues in poultry liver of 0.0003 ppm. Thus, there is no reasonable expectation of finite secondary residues in meat, meat by-products or eggs, and tolerances are not necessary.

2. *Analytical method*. Practical analytical methods for detecting and measuring levels of bispyribac-sodium have been developed and validated in/on the RAC, rice grain, and rice straw; processing fractions polished rice, rice hulls, and rice bran; and environmental samples. The extraction methodology has been validated using aged radio chemical residue samples from ^{14}C-metabolism studies. Bispyribac-sodium is a benzoic acid salt. To allow gas/liquid chromatography, the residues are methylated and measured as the methyl

ester of the benzoic acid. The analytical methods have been validated in rice, rice straw, and environmental matrices at an independent laboratory. The LOQ of bispyribac-sodium in the enforcement method is 0.02 ppm which will allow monitoring of food with residues at the levels proposed for the tolerances. Because the enforcement methodology uses a different methylating agent, the methodology used for analysis of the field residue trials had a LOQ of 0.01 ppm, a defined LOD of 0.005 ppm, and a statistical LOD of 0.001 ppm in rice grain.

3. *Magnitude of residues*—i. *Crop*. Data from sixteen (16) field trials in rice conducted in 1996 and 1997 in six (6) states throughout the rice growing regions of the U.S. show that at the proposed maximum total seasonal application rate (24 g active ingredient/Acre (ai/a), 0.053 lb ai/a) all measured residue values in rice grain were less than 0.005 ppm (n = 32). Data from three trials at a 2X rate (48 g ai/a) also all showed measured residue in the six samples of rice grain to be less than 0.005 ppm (n = 6). Nine (9) out of thirty–two (32) samples of rice straw from the sixteen 1X field sites showed finite residues of bispyribac-sodium. The average of the nine finite residues in rice straw is 0.007 ppm (n = 9, σ_{n-1} = 0.003 ppm) with a maximum value of 0.013 ppm. There were no finite residues (<0.005 ppm) observed in the six samples of rice straw from the 2X treatment rates. The processing study in rice using grain from a plot treated at 2X demonstrated that bispyribac-sodium was not detectable (<0.005 ppm) in rice grain, and did not concentrate (<0.005 ppm) in polished rice, rice hulls, or rice bran. No separate tolerances are necessary for processed rice products. The actual limit of detection of the analytical methodology used for all these studies was 0.001 ppm in rice grain and bran and 0.005 ppm in rice hulls. Finite residues were not detected in any treated rice grain sample even at exaggerated (2X) rates, or in any processed fraction. Because of the reduced sensitivity of the enforcement methodology, tolerances are proposed in rice grain and straw at 0.02 ppm. The field residue data indicate that the proposed tolerances are more than adequate to support bispyribac-sodium use on rice.

ii. *Secondary residues*. Using proposed tolerances to calculate the maximum feed exposure to fed animals, and using the generally very low potential for residue transfer demonstrated in the milk goat and laying hen metabolism studies, quantifiable secondary residues (>0.02 ppm) of bispyribac-sodium in animal tissues, milk, and eggs are not expected. Poultry liver is the tissue with the highest treatment to residue ratio. Using anticipated residues in poultry feed from rice, and rice products derived from the limit of detection of the field residue methodology, the potential residues in poultry liver would be a maximum of 0.0003 ppm. This is 60–fold below the RAC enforcement LOQ. The refore, tolerances are not proposed for secondary residues in any fed animal commodity.

iii. *Rotational crops*. Rotational crops planted 28 and 48 days after soil treatment with the 1X rate of bispyribac-sodium all showed radiocarbon equivalent residues of less than 0.01 ppm at normal harvest. This study demonstrates that bispyribac-sodium is not adsorbed by following crops, and that no rotational tolerances or labeling restrictions are necessary.

iv. *Irrigated crops*. Tomatoes, table beets, and bok choy were sprinkler irrigated with water containing 0.07 ppm bispyribac-sodium. No residues were detected in any sample of tomato fruit or table beet roots. Immature whole beet plants, mature beet tops, and bok choy leaves contained 0.015 to 0.025 ppm. Bispyribac-sodium in the soil from treated plots did not exceed 0.012 ppm. Sprinkler application of water containing high concentrations of bispyribac-sodium (the highest time zero concentration in paddy water from the aquatic field dissipation studies) led to low residues in leafy crops. This study demonstrates that bispyribac-sodium is not adsorbed by irrigated crops and thus tolerances or use restrictions are not necessary.

B. Toxicological Profile

Summary. A full battery of toxicology testing including studies of acute, chronic, oncogenicity, developmental, mutagenicity, and reproductive effects has been completed for bispyribac-sodium. The acute toxicity of bispyribac-sodium is low by all routes. Bispyribac-sodium is not a developmental or reproductive toxicant, and is not mutagenic or oncogenic. The toxicology reports for bispyribac-sodium have not yet been reviewed by EPA and thus, the Agency has not yet established toxic endpoints of concern, specifically chronic and acute oral toxicity endpoints for the compound. For the purpose of chronic dietary risk analysis, Valent proposes 0.017 milligrams/kilograms (mg/kg) body weight (bwt/day) as a chronic reference dose (RfD). This proposed RfD is based on a chronic endpoint of 1.7 mg/kg bwt/day no observed adverse effect level (NOAEL) for females from the two year oncogenicity feeding study in mice, and an uncertainty factor of one hundred. Bispyribac-sodium is of very low toxicity in all short-term evaluations, however, for the purposes of discussion, Valent proposes to use the NOAEL for maternal toxicity from the rabbit developmental toxicity study of 100 mg/kg bwt/day as an acute oral toxic endpoint. Valent is unable to identify toxicity endpoints of concern for acute, short term or chronic human exposures by any route other than oral.

1. *Acute toxicity*. Bispyribac-sodium technical produces very low to slight toxicity following oral, dermal or inhalation acute exposures. Bispyribac-sodium is slightly irritating to the eye, is not irritating to the skin and does not cause dermal sensitization in guinea pigs. Technical bispyribac-sodium and its formulated product should be classified in toxicity category III.

2. *Genotoxicty*. Bispyribac-sodium does not present a genetic hazard. Bispyribac-sodium technical was negative in the following genotoxicity assays:

•Reverse mutation (Ames).

•Chinese hampster ovary (CHO), chromosomal aberration (*in vitro*).

•Unscheduled DNA synthesis.

•Micronucleus in mice (*in vivo*).

In a bacterial DNA repair assay with *Bacillus subtilis*, bispyribac-sodium was potentially damaging to DNA. Overall, however, it is unlikely that bispyribac-sodium presents a genetic hazard.

3. *Reproductive and developmental toxicity*. Bispyribac-sodium is not a developmental or reproductive toxicant. Developmental toxicity studies have been performed in rats and rabbits, and multi-generational effects on reproduction were tested in rats.

In the developmental toxicity study conducted with rats, bispyribac-sodium. technical was administered by gavage at levels of 0, 100, 300, and 1,000 mg/kg bwt/day during gestation days 6–15. All animals were necropsied on gestation day 20 followed by a teratologic examination of the fetuses. One–half of the fetuses were examined for skeletal malformations and one–half for visceral malformations. There were no deaths in any of the groups. There were no treatment-related observations at necropsy. No other biologically relevant differences were noted. The incidence of fetal malformations and developmental variations was comparable with the controls. The maternal toxicity observed at 1,000 mg/kg bwt/day consisted of ano-genital staining. The maternal NOAEL was 300 mg/kg bwt/day and the developmental NOAEL was 1,000 mg/kg bwt/day.

In the developmental toxicity study conducted with rabbits, technical bispyribac-sodium was administered by gavage at levels of 0, 30, 100, and 300 mg/kg bwt/day during gestation days 6–18. Does were sacrificed on day 28. An external, visceral and skeletal examination was performed on all fetuses. Maternal toxicity included one death, two premature deliveries, and slight depression of body weight gain and food consumption in the high dose group. There were no specific changes noted at necropsy and no effects on fetal mortality, number of live fetuses or fetal weights. The NOAEL for maternal toxicity was 100 mg/kg bwt/day, and for developmental toxicity the NOAEL was 300 mg/kg bwt/day.

A two-generation reproduction study in rats was conducted with bispyribac-sodium technical at doses of 0, 20, 1,000, and 10,000 ppm. Systemic adult toxicity included decreased bwt gain and food consumption; increased liver weight; and histopathological changes in the liver and bile duct. The growth of the F1 and F2 offspring was inhibited at 10,000 ppm. The NOAELs for systemic adult toxicity and offspring developmental parameters were 20 and 1,000 ppm, respectively. No effects on reproduction were produced at 10,000 ppm, the highest dose tested.

4. *Subchronic toxicity*. Subchronic oral toxicity studies conducted with bispyribac-sodium technical in the rat and dog indicate a low level of toxicity.

Bispyribac-sodium technical was tested in rats at dose levels of 0, 100, 1,000, 10,000, and 20,000 ppm in the diet for 13 weeks. Effects observed at higher doses included organ weight changes; histopathological changes in the liver, and the bile duct; increased serum GOT, GPT, ALP, and BUN; various alterations in hematology parameters; and reduced food consumption, food efficiency and bwt gain. The NOAEL was 100 ppm (7.2 mg/kg bwt/day) in males and 1,000 ppm (79.9 mg/kg bwt/day) in female rats.

Bispyribac-sodium technical was also tested in dogs for 13 weeks at doses of 0, 30, 100, and 600 mg/kg bwt/day. Vomiting, salivation, and loose stools were observed in animals exposed to 600 mg/kg bwt/day. Histopathological changes in the liver and bile ducts were also noted in males at 600 mg/kg bwt/day. The NOAEL was 100 mg/kg bwt/day.

In a 21–day dermal toxicity study in rats, there was essentially no significant indication of toxicity. The NOAEL for this study was the highest dose tested (HDT) of 1,000 mg/kg bwt/day (the limit dose).

5. *Chronic toxicity*. Bispyribac-sodium technical has been tested in chronic studies with dogs, rats, and mice.

Bispyribac-sodium technical is not a carcinogen. Studies with bispyribac-sodium technical in rats and mice have shown that repeated high dose exposures produced decreased bwt gain, changes in hematological, blood biochemistry values, and histopathological lesions of the liver, and bile duct in rats; and reduced bwt gain, decreased liver weight, increased kidney weight, and histopathological changes in the liver in mice; but did not produce cancer in test animals. No oncogenic response was observed in a rat 2–year chronic feeding/oncogenicity study or in the two–year feeding oncogenicity study in mice.

Bispyribac-sodium technical was tested in rats for 2 years at doses of 0, 20, 200, 3,500, and 7,000 ppm in males and 0, 20, 200, 5,000, and 10,000 ppm in females. Effects observed at higher doses included decreased bwt gain, changes in hematological and blood biochemistry values, and histopathological lesions of the liver, and bile duct. No neoplastic lesions were observed. The NOAEL was 200 ppm (male 10.9 mg/kg b.w./day, female 13.9 mg/kg bwt/day).

Bispyribac-sodium technical was tested in mice for 2 years at doses of 0, 10, 100, 2,500, and 5,000 ppm. Effects observed at higher doses included reduced bwt gain, decreased liver weight, increased kidney weight, and histopathological changes in the liver. No neoplastic lesions were observed. The NOAEL was 100 ppm (14.1 mg/kg bwt/day) in males and 10 ppm (1.7 mg/kg bwt/day) in females based on organ weight changes.

A 52–week chronic toxicity study of bispyribac-sodium technical was conducted in dogs at doses of 0, 10, 100, and 750 mg/kg bwt/day. Effects observed at higher doses included salivation, vomiting, and loose stools; increased liver weight; and histopathological changes in the bile duct. The NOAEL was 10 mg/kg bwt/day.

6. *Mechanistic studies*. Mechanistic studies were undertaken to investigate the histopathological effects on the common and, intralobular bile duct observed in the long-term rat studies. Similar histopathological effects were not noted in the chronic studies with the mouse or the dog, which, like the human, have an intact gall bladder. The results suggest that an increased production and flow of bile acids in the rat may relate to the histopathological changes observed.

7. *Animal metabolism*. The absorption, tissue distribution, metabolism, and excretion of ^{14}C-labeled bispyribac-sodium were studied in rats. Following administration to the rodent, the majority of bispyribac-sodium is excreted into the feces via the bile. The majority of material excreted in the feces is either unchanged parent compound or its desmethylated derivative. Approximately half of the material excreted into the urine was also unchanged parent material. The half-life of bispyribac-sodium in rats is between 28 to 30 hours. These data show that bispyribac-sodium is readily excreted but not extensively metabolized in the rodent. Very low concentrations of radiocarbon in tissues over time indicate that the potential for bioaccumulation is minimal. There were no significant sex or dose-related differences in excretion or metabolism. Animal metabolites are the same as those detected in rice and in the environment.

8. *Metabolite toxicology*. Studies show that bispyribac-sodium is extensively metabolized by rice. Therefore, a series of acute oral and genetic toxicity tests were performed to investigate the potential toxicity of the primary rice plant degradates. None of these tests indicates any acute or genetic hazard from these metabolites. Because parent and metabolites are not retained in the body, the potential for acute toxicity from *in situ* formed metabolites is low. The potential for chronic toxicity is adequately tested by chronic exposure to the parent at the maximum tolerance dose (MTD) and consequent chronic exposure to the internally formed metabolites.

9. *Endocrine disruption*. No special studies to investigate the potential for estrogenic or other endocrine effects of bispyribac-sodium have been performed. However, as summarized above, a large and detailed toxicology data base exists for the compound including studies in all required categories. These studies include acute, sub-chronic, chronic, developmental, and reproductive toxicology studies including detailed histology and histopathology of numerous tissues, including endocrine organs, following repeated or long term exposure. These studies are considered capable of revealing endocrine effects, and the results of all of these studies show no evidence of any endocrine-mediated effects and no pathology of the endocrine organs. Consequently, it is concluded that bispyribac-sodium does not possess endocrine disrupting properties.

C. Aggregate Exposure

1. *Dietary exposure*. The toxicology data base for bispyribac-sodium has not yet been reviewed by EPA and thus, the Agency has not yet established toxic endpoints of concern, specifically chronic and acute oral toxicity endpoints for the compound. As discussed above, for the purpose of chronic dietary risk analysis, Valent proposes 0.017 mg/kg bwt/day as a chronic RfD, including an uncertainty factor of one hundred. Bispyribac-sodium is of very low toxicity in all short-term evaluations. Valent proposes to use 100 mg/kg bwt/day as an acute oral toxic endpoint. Valent is unable to identify toxicity endpoints of concern for acute, short term or chronic human exposures by any route other than oral.

i. *Food— Chronic*. A Tier I chronic dietary exposure and risk analysis for bispyribac-sodium residues was calculated using tolerance level residues for the U.S. population and 26 population subgroups. The results from several representative subgroups are listed below in Table. Chronic dietary exposure was at or below 0.16% of the RfD. Generally, the Agency has no cause for concern if total residue contribution for published and proposed tolerances is less than 100% of the RfD.

TABLE 1.—TIER I CALCULATED CHRONIC DIETARY EXPOSURES TO THE TOTAL U.S. POPULATION AND SELECTED SUB-POPULATIONS TO TOLERANCE LEVEL BISPYRIBAC-SODIUM RESIDUES IN FOOD

Population subgroup	Exposure (mg/kg bwt/day)	Percent of RfD
Total U.S. population (all seasons)	0.000006	0.035
Non-hispanic other than black or white	0.000027	0.159
Females (20+ years, not preg. or nursing	0.000004	0.024
Children (1–6 Years)	0.000011	0.065
All Infants (<1 Year Old)	0.000016	0.094
Non-Nursing Infants (<1 Year Old)	0.000018	0.106
Nursing Infants (<1 Year Old)	0.000009	0.053

Acute. A Tier I acute dietary exposure and risk analysis for bispyribac-sodium residues was calculated using tolerance level residues and 100% of the crop treated for the U.S. population, females (13 +), and five infant and child subgroups. The calculated exposures and margins of exposure (MOE) for the higher exposed proportions of the subgroups are listed below in Table 2. In all cases, margins of exposure are very large, and for the 95th percentile, all exceed 1–million.

TABLE 2.—TIER I CALCULATED ACUTE DIETARY EXPOSURES TO THE TOTAL U.S. POPULATION AND SELECTED SUB-POPULATIONS TO TOLERANCE LEVEL BISPYRIBAC-SODIUM RESIDUES IN FOOD (PER-CAPITA DAYS)

Population subgroup	95th Percentile		99.9th Percentile	
	Exposure (mg/kg bwt/day)	MOE	Exposure (mg/kg bwt/day)	MOE
U.S. population	0.000031	>1,000,000	0.000152	787,000
Females (13+)	0.000023	>1,000,000	0.000097	>1,000,000
Children 1–6	0.000061	>1,000,000	0.000249	402,000
Children 7–12	0.000041	>1,000,000	0.000127	787,000
All Infants	0.000083	>1,000,000	0.000267	375,000
Nursing Infants (<1)	0.000044	>1,000,000	0.000235	426,000
Non-Nursing Infants (<1)	0.000087	>1,000,000	0.000268	373,000

ii. *Drinking water*. Since bispyribac-sodium is applied outdoors to rice, the potential exists for bispyribac-sodium or its metabolites to reach ground or surface water that may be used for drinking water. Bispyribac-sodium will not move to ground water because of the nearly complete lack of leaching from rice paddies along with the low use rate therefore a SCI-GRO estimation of groundwater contamination was not performed. To quantify potential high end bispyribac-sodium exposure from drinking water, ''Tier I'' potential surface water concentrations were estimated using the rice simulation in generic expected environmental concentration (GENEEC) 1.3. The highest average 56–day concentration predicted in the simulated paddy water by GENEEC 1.3 was 15.45 parts per billion (ppb). Reducing this estimate by a factor of three gives a high end estimate for drinking water contamination. Using standard assumptions about bwt and water consumption, the maximum chronic exposure from this drinking water would be 0.00015 and 0.00052 mg/kg bwt/day for adults and children, respectively; 3.03% of the RfD for children. Based on this worse case analysis, the contribution of drinking water derived from treated rice paddy water to the dietary risk is much greater than that from tolerance level food, but still well within the acceptable range.

2. *Non-dietary exposure*. Bispyribac-sodium has only proposed agricultural use on rice, and no other crop, homeowner, turf, or industrial uses. Thus, no non-dietary risk assessment is needed.

D. Cumulative Effects

Section 408(b)(2)(D)(v) requires that the Agency must consider ''available information'' concerning the cumulative effects of a particular pesticide's residues and ''other substances that have a common mechanism of toxicity''. Available information in this context include not only toxicity, chemistry, and exposure data, but also scientific

policies and methodologies for understanding common mechanisms of toxicity and conducting cumulative risk assessments. For most pesticides, although the Agency has some information in its files that may turn out to be helpful in eventually determining whether a pesticide shares a common mechanism of toxicity with any other substances, EPA does not, at this time, have the methodologies to resolve the complex scientific issues concerning common mechanism of toxicity in a meaningful way.

There are no other pesticidal compounds that are structurally related to bispyribac-sodium and have similar effects on animals. In consideration of potential cumulative effects of bispyribac-sodium and other substances that may have a common mechanism of toxicity, there are currently no available data or other reliable information indicating that any toxic effects produced by bispyribac-sodium would be cumulative with those of other chemical compounds. Thus, only the potential risks of bispyribac-sodium have been considered in this assessment of aggregate exposure and effects.

Valent will submit information for EPA to consider concerning potential cumulative effects of bispyribac-sodium consistent with any schedule established by EPA pursuant to the Food Quality Protection Act (FQPA).

E. Safety Determination

The Food Quality Protection Act of 1996 introduces a new standard of safety, a reasonable certainty of no harm. To make this determination, at this time the Agency should consider only the incremental risk of bispyribac-sodium in its exposure assessment. Since the potential chronic and acute exposures to bispyribac-sodium are small even using worse case drinking water and Tier I dietary (food) exposures (<<100% of RfD, MOE >>100) the provisions of the FQPA of 1996 will not be violated.

1. *U.S. population*—i. *Chronic exposure*. Using the Tier I dietary exposure assessment procedures described above for bispyribac-sodium, calculated chronic dietary exposure resulting from residue exposure from the proposed rice use of bispyribac-sodium is minimal. The estimated chronic dietary exposure from food for the overall U.S. population and many non-child/infant subgroups is 0.159 to 0.018% of the RfD (0.000027 to 0.000003 mg/kg bwt/day). Addition of the worse case potential chronic exposure from drinking water obtained from treated rice paddy water increases exposure by 0.000147 mg/kg bwt/day to 0.000174 mg/kg bwt/day for the maximally exposed adult subpopulation, non-hispanic other than black or white, and the maximum occupancy of the RfD from 0.159% to 1.02 percent. Generally, the Agency has no cause for concern if total residue contribution is less than 100% of the RfD. It can be concluded that there is a reasonable certainty that no harm will result to the overall U.S. population and many non-child/infant subgroups from aggregate, chronic exposure to bispyribac-sodium residues.

ii. *Acute Exposure*. Using the Tier I acute dietary exposure assessment procedures described above for bispyribac-sodium, calculated acute dietary exposure resulting from tolerance level residue exposure to the U.S. population from the proposed rice use of bispyribac-sodium is minimal. The estimated acute dietary exposure at the 95th and 99th percentiles of exposure from food for the overall U.S. population is 0.000031 and 0.000152 mg/kg bwt/day, respectively. Addition of the worse case potential chronic exposure from drinking water increases exposure by 0.000147 mg/kg bwt/day. This addition of water exposure reduces the MOE value at the 99.9th percentile of exposure for the U.S. population from 658,000 to 334,000. Similarly, at the 95th percentile the MOE value is reduced from >1,000,000 to 562,000. In a conservative policy, the Agency has no cause for concern if total acute exposure in a Tier I calculation for the 95th percentile yields a MOE of 100 or larger. It can be concluded that there is a reasonable certainty that no harm will result to the overall U.S. population and many non-child/infant subgroups from aggregate, acute exposure to bispyribac-sodium residues.

2. *Infants and children. Safety factor for infants and children*. In assessing the potential for additional sensitivity of infants and children to residues of bispyribac-sodium, FFDCA section 408 provides that EPA shall apply an additional margin of safety, up to ten–fold, for added protection for infants and children in the case of threshold effects unless EPA determines that a different margin of safety will be safe for infants and children.

The toxicological data base for evaluating prenatal and postnatal toxicity for bispyribac-sodium is complete with respect to current data requirements. There are no special prenatal or postnatal toxicity concerns for infants and children, based on the results of the rat and rabbit developmental toxicity studies or the 2–generation reproductive toxicity study in rats. Valent concludes that reliable data support use of the standard 100–fold uncertainty factor and that an additional uncertainty factor is not needed for bispyribac-sodium to be further protective of infants and children.

i. *Chronic risk*. Using the conservative, Tier I exposure assumptions described above, the percentage of the RfD utilized by dietary (food only) exposure to residues of bispyribac-sodium is very small. Exposures range from 0.000018 mg/kg bwt/day for non-nursing infants (<1 year old) to 0.000007 mg/kg bwt/day for children 7–12 —0.106 to 0.041% of the RfD. Adding the worse case potential incremental exposure to infants and children from bispyribac-sodium in drinking water obtained from treated rice paddy water (0.000515 mg/kg bwt/day) materially increases the aggregate, chronic dietary exposure and increases the occupancy of the RfD by 3.03% to 3.14% for non-nursing infants (<1–year old). EPA generally has no concern for exposures below 100% of the RfD because the RfD represents the level at or below which daily aggregate dietary exposure over a lifetime will not pose appreciable risks to human health. It can be concluded that there is a reasonable certainty that no harm will result to infants and children from aggregate, chronic exposure to bispyribac-sodium residues.

ii. *Acute Exposure*. The potential acute exposure from food to the various child and infant population subgroups all provide very large MOE values exceeding 370,000. Addition of the worse case ''background'' dietary exposure from water (0.000515 mg/kg bwt/day) reduces the MOE values at the 99.9th percentile of exposure for non-nursing infants (<1 year old) from 373,000 to 128,000. Similarly, at the 95th percentile the MOE value is reduced from >1,000,000 to 166,000. In a conservative policy, the Agency has no cause for concern if total acute exposure in a Tier I calculation for the 95th percentile yields a MOE of 100 or larger. It can be concluded that there is a reasonable certainty that no harm will result to infants and children from aggregate, acute exposure to bispyribac-sodium residues.

3. *Safety determination summary*. Aggregate acute or chronic dietary exposure to various sub-populations of children and adults demonstrate acceptable risk, even though total calculated dietary exposure is dominated by the unrealistic overestimation of potential drinking water concentrations. Chronic exposures to bispyribac-sodium occupy considerably less than 100% of the RfD,

and all acute MOE values greatly exceed 100. Chronic and acute dietary risk to children from bispyribac-sodium should not be of concern. Further, bispyribac-sodium has only agricultural uses and no other uses, such as indoor pest control, homeowner or turf, that could lead to unique, enhanced exposures to vulnerable sub-groups of the population. It can be concluded that there is a reasonable certainty that no harm will result to the U.S. population or to any sub-group of the U.S. population, including infants and children, from aggregate chronic or aggregate acute exposures to bispyribac-sodium residues resulting from pending uses.

TABLE 3.—SUMMARY OF EXPOSURE VALUES AND CORRESPONDING RISK QUOTIENTS FOR AGGREGATE EXPOSURES TO BISPYRIBAC-SODIUM BY DIFFERENT ROUTES AND DURATIONS (ALL EXPOSURE VALUES ARE IN MG/KG BW/DAY)

	Percentile	Food	Water	Aggregate	Percent RfD	MOE
Chronic dietary (RfD = 0.017 mg/kg b.w./day).						
Adult (Non-Hispanic other than black or white)	NA*	0.000027	0.000147	0.000174	1.02	NA
Infants and children (Non-nursing infants (<1 year old))	NA	0.0000187	0.000515	0.000533	3.14	NA
Acute dietary: Acute endpoint = 100 mg/kg bw/day.						
Adult (U.S. Population)	99.9th	0.000152	0.000147	0.000299	NA	334,000
	95.5th	0.0000312	0.000147	0.0001782	NA	561,000
Infants and children (Non-nursing infants (<1 year old))	99.9th	0.000268	0.000515	0.000783	NA	128,000
	95th	0.000087	0.000515	0.000602	NA	166,000

*Not applicable

F. International Tolerances

There are presently no Codex maximum residue limits (MRL) established for bispyribac-sodium. The compound is presently registered for use on rice in several countries in Asia, Southeast Asia, Japan, South and Central America, the Dominican Republic, and Turkey. The use pattern is very similar to that proposed for the United States. Two countries have established tolerances: Japan a minimum MRL of 0.1 ppm and Brazil a MRL of 0.01 ppm both bispyribac-sodium in/on brown rice.

[FR Doc. 00–24212 Filed 9–19–00; 8:45 am]

BILLING CODE 6560–50–S

FEDERAL COMMUNICATIONS COMMISSION

[Report No. 2438]

Petitions for Reconsideration and Clarification of Action in Rulemaking Proceeding

September 13, 2000.

Petitions for Reconsideration and Clarification have been filed in the Commission's rulemaking proceeding listed in this Public Notice and published pursuant to 47 CFR Section 1.429(e). The full text of this document is available for viewing and copying in Room CY–A257, 445 12th Street, S.W., Washington, D.C. or may be purchased from the Commission's copy contractor, ITS, Inc. (202) 857–3800. Oppositions to these petitions must be filed by October 5, 2000. See Section 1.4(b)(1) of the Commission's rules (47 CFR 1.4(b)(1)). Replies to an opposition must be filed within 10 days after the time for filing oppositions has expired.

Subject: Amendment of Section 2.106 of the Commission's Rules to Allocate Spectrum at 2 GHz for Use by the Mobile Satellite Service (ET Docket No. 95–18)

Number of Petitions Filed: 7.

Federal Communications Commission.

Magalie Roman Salas,

Secretary.

[FR Doc. 00–24064 Filed 9–19–00; 8:45 am]

BILLING CODE 6712–01–M

FEDERAL ELECTION COMMISSION

Sunshine Act Meeting

Previously Announced Date & Time: Thursday, September 14, 2000, 10 a.m., Meeting open to the public.

The following item was added to the agenda: (continued from open meeting of September 12, 2000)

Draft Statements of Reasons—Petitions to Deny Certification of Public Funds to Patrick J. Buchanan and Ezola Foster (LRAs#598/599).

Previously Announced Date & Time: Thursday, September 21, 2000, 10 a.m., meeting open to the public.

The following item was added to the agenda: (held over from open meeting of September 14, 2000)

Dole for President—Statement of Reasons (LRA#467)

Dole/Kemp '96, Inc.—Statement of Reasons (LRA#506)

Date & Time: Tuesday, September 26, 2000 at 10 a.m.

Place: 999 Street, NW., Washington, DC

Status: This meeting will be closed to the public.

Items To Be Discussed:

Compliance matters pursuant to 2 U.S.C. § 437g.

Audits conducted pursuant to 2 U.S.C. § 437g, § 438(b), and Title 26, U.S.C.

Matters concerning participation in civil actions or proceedings or arbitration.

Internal personnel rules and procedures or matters affecting a particular employee.

Date & Time: Thursday, September 28, 2000 at 10 a.m.

Place: 999 Street, NW., Washington, DC (Ninth Floor).

Status: This meeting will be open to the public.

Items To Be Discussed:

Correction and Approval of Minutes.

Advisory Opinion 2000–23: New York State Democratic Committee by counsel, Joseph E. Sandler and Neil P. Reiff.

Advisory Opinion 2000–26: Joel Deckard, Reform Party candidates, U.S. Senate, Florida.

Status of Regulations: Soft Money Rulemaking.

Administrative Matters.

Person to Contact for Information: Mr. Ron Harris, Press Officer, Telephone (202) 694–1220.

Mary W. Dove,

Acting Secretary of the Commission.

[FR Doc. 00–24325 Filed 9–18–00; 3:26 pm]

BILLING CODE 6715–01–M

FEDERAL MARITIME COMMISSION

Notice of Agreement(s) Filed

The Commission hereby gives notice of the filing of the following agreement(s) under the Shipping Act of 1984. Interested parties can review or obtain copies of agreements at the Washington, DC offices of the Commission, 800 North Capitol Street, N.W., Room 940. Interested parties may submit comments on an agreement to the Secretary, Federal Maritime Commission, Washington, DC 20573, within 10 days of the date this notice appears in the **Federal Register**.

Agreement No.: 011689–001.

Title: Zim/CSCL Space Charter Agreement FMC Agreement No. 011689–001.

Parties: China Shipping Container Lines Co. Ltd. (''CSCL'') Zim Israel Navigation Co., Ltd. (''Zim'').

Synopsis: The proposed agreement amendment reflects the creation of CSCL's new string serving China-Japan-Korea-U.S. West Coast, increases the slot commitments, breaks down those commitments by vessel string, and adds provisions on vessel dry dock notice and omission of ports. The parties request expedited review.

Dated: September 15, 2000.

By Order of the Federal Maritime Commission.

Theodore A. Zook,

Assistant Secretary.

[FR Doc. 00–24189 Filed 9–19–00; 8:45 am]

BILLING CODE 6730–01–P

FEDERAL MARITIME COMMISSION

Ocean Transportation Intermediary License; Applicant

Notice is hereby given that the following applicants have filed with the Federal Maritime Commission an application for licenses as Non-Vessel Operating Common Carrier and Ocean Freight Forwarder—Ocean Transportation Intermediary pursuant to section 19 of the Shipping Act of 1984 as amended (46 U.S.C. app. 1718 and 46 CFR 515).

Persons knowing of any reason why the following applicants should not receive a license are requested to contact the Office of Transportation Intermediaries, Federal Maritime Commission, Washington, D.C. 20573.

Non-Vessel Operating Common Carrier Ocean Transportation Intermediary Applicants

Quest Logistics, Inc., 9999 NW 89 Ave., Bay #3, Medley, FL 33178, Officer: Gustavo Belgrano, General Manager (Qualifying Individual)

Oceanlinx International LLC, 15 Enclosure Drive, Morganville, NJ 07751, Officer: S. Raghuveer, Vice President (Qualifying Individual)

Non-Vessel Operating Common Carrier and Ocean Freight Forwarder Transportation Intermediary Applicants

TPS Aviation, Inc., 1515 Crocker Avenue, Hayward, CA 94544–7038, Officer: George S. Kujiraoka, President (Qualifying Individual)

American Global Logistics Inc., 122 East 55th Street., 6th Floor, New York, NY 10022, Officer: John Pragelas, Managing Director (Qualifying Individual)

YES Logistics Corporation, 475 14th Street, Suite 500, Oakland, CA 94612 Officers: Frank Chao, President (Qualifying Individual), Ching Chang Wu, Director

Click4Ship.com, Inc., 1448 S. Santa Fe Avenue, Compton, CA 90221, Officers:
Richard Zhao, CEO (Qualifying Individual), Haiying Chen, CFO

Ocean Freight Forwarders—Ocean Transportation Intermediary Applicants

Koil Inc. d/b/a Vship Co., 61–20, Grand Central Pkwy, C–208, Forest Hills, NY 11375, Officers: Bindu Koilparampil, President (Qualifying Individual), Ali A. Siddiqui, Secretary

Beluga International Inc., 1079 Carriage Hill Parkway, Annapolis, MD 21401, Officers: Peter Johnson, President (Qualifying Individual), Jenny Zhang, Vice President

Universal Freightways Texas, Inc. d/b/a Universal Freightways 18411 Viscount Road, Bldg. #9, Suite 100, Houston, TX 77032, Officers: Juan Carlos Esquivel, President (Qualifying Individual), Robert Esquivel, Director

Universal Freightways New York Corp d/b/a Universal Freightways, 868 Elston Street, Rahway, NJ 07065, Officers: Juan Carlos Esquivel, President (Qualifying Individual), Robert Esquivel, Director

Interlogistix, L.L.C., 140 E. 19th Avenue, Suite 201, Denver, CO 80203, Officers: Brad Schmeh, Operation Manager (Qualifying Individual), David Cisneros, Managing Partner

Alden International, Inc., 809 Washington, Traverse City, MI 49686, Officer: Evan A. Smith, President (Qualifying Individual)

FR Meyer's Sohn North America LLC, One First Avenue, Suite 100, West Reading, PA 19611, Officers: George Santa Cara, Vice President (Qualifying Individual), Robert K. Buack, President

Dated: September 15, 2000

Theodore A. Zook,

Assistant Secretary

[FR Doc. 00–24192 Filed 9–19–00; 8:45 am]

BILLING CODE 6730–01–P

FEDERAL MARITIME COMMISSION

Ocean Transportation Intermediary License Terminations

The Federal Maritime Commission hereby gives notice that the following ocean transportation intermediary licenses have been terminated pursuant to section 19 of the Shipping Act of 1984 (46 U.S.C. app. 1718) and the regulations of the Commission pertaining to the licensing of Ocean Transportation Intermediaries, effective on the corresponding dates shown below:

LICENSE NUMBER: 4508F.
NAME: Chippeys Enterprises, Inc.
ADDRESS: 744 NW 107th Street, Miami, FL 33168.
DATE REVOKED: July 19, 2000.
REASON: Failed to maintain a valid bond.

LICENSE NUMBER: 14095N.
NAME: Consolidated Express Co., Ltd.
ADDRESS: 11222 La Cienega Blvd., #168, Inglewood, CA 90304
DATE REVOKED: July 12, 2000.
REASON: Failed to maintain a valid bond.

LICENSE NUMBER: 7993N.
NAME: Diversified Freight Container Line, Inc.
ADDRESS: 955 Dillon Drive, Wood Dale, IL 60191.
DATE REVOKED: July 26, 2000.
REASON: Failed to maintain a valid bond.

LICENSE NUMBER: 14652N.
NAME: East Indies America Line, Inc. d/b/a East Indies Australia Line.
ADDRESS: 11042 SR 525, Suite 123–503, Clinton, WA 98236.
DATE REVOKED: July 13, 2000.
REASON: Failed to maintain a valid bond.

LICENSE NUMBER: 1227N.
NAME: Fast Shipping Co., d/b/a Logitrade and Asiapac d/b/a DG Lines
ADDRESS: 201 Servilla Avenue, Suite 306, Coral Gables, FL 33134.
DATE REVOKED: August 13, 2000.
REASON: Failed to maintain a valid bond.

LICENSE NUMBER: 4532F.
NAME: Florida International Forwarders, Inc.
ADDRESS: 10302 NW South River Drive, Bay #18, Miami, FL 33178.

REVOKED: July 16, 2000.
REASON: Failed to maintain a valid bond.

LICENSE NUMBER: 4518F.
NAME: Freight Connection Incorporated.
ADDRESS: 324 Garden Road, Springfield, PA 19064.
DATE REVOKED: July 15, 2000.
REASON: Failed to maintain a valid bond.

LICENSE NUMBER: 3281F.
NAME: International Forwarding Services, Inc.
ADDRESS: 6521–31 N.W. 87th Avenue, Miami, FL 33166
DATE TERMINATED: June 27, 2000.
REASON: Surrendered license voluntarily.

LICENSE NUMBER: 4539F.
NAME: Kenneth Clark Company, Inc.
ADDRESS: P.O. Box 9145, Baltimore, MD 21222.
DATE REVOKED: July 9, 2000.
REASON: Failed to maintain a valid bond.

LICENSE NUMBER: 16074N.
NAME: Madison Transport, Inc.
ADDRESS: 2088 Main Street, Suite D, Madison, MS 39110
DATE REVOKED: August 10, 2000.
REASON: Failed to maintain a valid bond.

LICENSE NUMBER: 15136N.
NAME: Maritime Brokers Inc.
ADDRESS: 1680 N.W. 95th Avenue, Miami, FL 33172.
DATE REVOKED: February 27, 2000.
REASON: Failed to maintain a valid bond.

LICENSE NUMBER: 14334N.
NAME: Mercantile Logistics Inc.
ADDRESS: Giralda Farms Madison Avenue, P.O. Box 885, Madison, NJ 07940–0885
DATE REVOKED: August 2, 2000.
REASON: Failed to maintain a valid bond.

LICENSE NUMBER: 14237NF.
NAME: Mondo Max Inc.
ADDRESS: 1107 East Chapman Avenue, Suite 201, Orange, CA 95866.
DATE REVOKED: July 26, 2000.
REASON: Failed to maintain a valid bond.

LICENSE NUMBER: 16737F.
NAME: P-Serv Technologies, Inc.
ADDRESS: 4457 Willow Road, Suite 100, Pleasanton, CA 94588
DATE TEMINATED: August 14, 2000.
REASON: Surrendered license voluntarily.

LICENSE NUMBER: 14345N.
NAME: Pyramid Ocean Carriers, Inc.
ADDRESS: 15311 Vantage Parkway West, Suite 100, Houston, TX 77032.
DATE REVOKED: July 15, 2000.
REASON: Failed to maintain a valid bond.

LICENSE NUMBER: 15318N.
NAME: Redwood Systems, Inc.
ADDRESS: 175 Linfield Drive, Menlo Park, CA 94025.
DATE REVOKED: July 15, 2000.
REASON: Failed to maintain a valid bond.

LICENSE NUMBER: 3171.
NAME: RSB Logistic Services Inc.
ADDRESS: 219 Cardinal Crescent, Saskatoon, Canada S7L–7K8.
DATE REVOKED: May 18, 2000.
REASON: Failed to maintain a valid bond.

LICENSE NUMBER: 3071F.
NAME: Saga Transport (U.S.A.) Inc.
ADDRESS: 5306 Clinton Drive, Houston, TX 77020.
DATE TEMINATED: July 18, 2000.
REASON: Surrendered license voluntarily.

LICENSE NUMBER: 16091N.
NAME: Salem Logistics Services, Inc.
ADDRESS: 1 Port Center, 35 West Broadway, Salem, NJ 08079–1048.
DATE REVOKED: July 20, 2000.
REASON: Failed to maintain a valid bond.

LICENSE NUMBER: 14561N.
NAME: Thomas Cheong d/b/a Tower Trans International.
ADDRESS: 17204 S. Figueroa Street, Gardena, CA 90248.
DATE REVOKED: July 19, 2000.
REASON: Failed to maintain a valid bond.

LICENSE NUMBER: 16270N.
NAME: Trans Service Line (USA), Inc.
ADDRESS: 50 Broadway, Suite 1603, New York, NY 10004
DATE REVOKED: July 12, 2000.
REASON: Failed to maintain a valid bond.

LICENSE NUMBER: 6272N.
NAME: Weber International Freight Inc.
ADDRESS: 10 Milford Lane, Melville, NY 11747.
DATE REVOKED: July 20, 2000.
REASON: Failed to maintain a valid bond.

LICENSE NUMBER: 10338N.
NAME: Zap Cargo Services, Inc.
ADDRESS: 8425 NW 29th Street, Miami, FL 33122.
DATE REVOKED: July 19, 2000.
REASON: Failed to maintain a valid bond.

Sandra L. Kusumoto,
Director, Bureau of Consumer Complaints and Licensing.

[FR Doc. 00–24190 Filed 9–19–00; 8:45 am]

BILLING CODE 6730–01–P

FEDERAL MARITIME COMMISSION

Ocean Transportation Intermediary License; Reissuance of License

Notice is hereby given that the following Ocean Transportation Intermediary license has been reissued by the Federal Maritime Commission pursuant to section 19 of the Shipping Act of 1984, as amended by OSRA 1998 (46 U.S.C. app. 1718) and the regulations of the Commission pertaining to the licensing of Ocean Transportation Intermediaries, 46 CFR 515.

LICENSE NO.	NAME/ADDRESS	DATE REISSUED
4532F	Florida International Forwarders, Inc., 10302 NW, South River Drive, Bay 18, Miami, FL 33178.	July 16, 2000.

Sandra L. Kusumoto,
Director, Bureau of Consumer Complaints and Licensing.

[FR Doc. 00–24191 Filed 9–19–00; 8:45 am]

BILLING CODE 6730–01–P

FEDERAL RESERVE SYSTEM

Agency Information Collection Activities: Proposed Collection; Comment Request

AGENCY: Board of Governors of the Federal Reserve System.

SUMMARY: Background.

On June 15, 1984, the Office of Management and Budget (OMB) delegated to the Board of Governors of the Federal Reserve System (Board) its approval authority under the Paperwork Reduction Act, as per 5 CFR 1320.16, to approve of and assign OMB control numbers to collection of information requests and requirements conducted or sponsored by the Board under conditions set forth in 5 CFR 1320 Appendix A.1. Board-approved collections of information are incorporated into the official OMB

inventory of currently approved collections of information. Copies of the OMB 83–Is and supporting statements and approved collection of information instruments are placed into OMB's public docket files. The Federal Reserve may not conduct or sponsor, and the respondent is not required to respond to, an information collection that has been extended, revised, or implemented on or after October 1, 1995, unless it displays a currently valid OMB control number.

Request for Comment on Information Collection Proposals

The following information collections, which are being handled under this delegated authority, have received initial Board approval and are hereby published for comment. At the end of the comment period, the proposed information collections, along with an analysis of comments and recommendations received, will be submitted to the Board for final approval under OMB delegated authority. Comments are invited on the following:

a. whether the proposed collections of information are necessary for the proper performance of the Federal Reserve's functions; including whether the information has practical utility;

b. the accuracy of the Federal Reserve's estimate of the burden of the proposed information collections, including the validity of the methodology and assumptions used;

c. ways to enhance the quality, utility, and clarity of the information to be collected; and

d. ways to minimize the burden of information collections on respondents, including through the use of automated collection techniques or other forms of information technology.

DATES: Comments must be submitted on or before November 20, 2000.

ADDRESSES: Comments, which should refer to the OMB control number or agency form number, should be addressed to Jennifer J. Johnson, Secretary, Board of Governors of the Federal Reserve System, 20th and C Streets, N.W., Washington, DC 20551, or mailed electronically to regs.comments@federalreserve.gov. Comments addressed to Ms. Johnson also may be delivered to the Board's mailroom between 8:45 a.m. and 5:15 p.m., and to the security control room outside of those hours. Both the mailroom and the security control room are accessible from the courtyard entrance on 20th Street between Constitution Avenue and C Street, N.W. Comments received may be inspected in room M–P–500 between 9:00 a.m. and 5:00 p.m., except as provided in section 261.14 of the Board's Rules Regarding Availability of Information, 12 CFR 261.14(a).

A copy of the comments may also be submitted to the OMB desk officer for the Board: Alexander T. Hunt, Office of Information and Regulatory Affairs, Office of Management and Budget, New Executive Office Building, Room 3208, Washington, DC 20503.

FOR FURTHER INFORMATION CONTACT: A copy of the proposed form and instructions, the Paperwork Reduction Act Submission (OMB 83–I), supporting statement, and other documents that will be placed into OMB's public docket files once approved may be requested from the agency clearance officer, whose name appears below. Mary M. West, Federal Reserve Board Clearance Officer (202–452-3829), Division of Research and Statistics, Board of Governors of the Federal Reserve System, Washington, DC 20551. Telecommunications Device for the Deaf (TDD) users may contact Diane Jenkins, (202–452–3544), Board of Governors of the Federal Reserve System, Washington, DC 20551.

Proposal To Approve Under OMB Delegated Authority the Extension for Three Years, With Revision, of the Following Reports

1. *Report title:* Annual Report of Bank Holding Companies (FR Y–6) and Changes in Investments and Activities of Top-Tier Financial Holding Companies, Bank Holding Companies, and State Member Banks (FR Y–6A)

Agency form number: FR Y–6 and FR Y–6A

OMB control number: 7100–0124

Frequency: annual and event-generated

Reporters: domestic top-tier BHCs

Annual reporting hours: 22,552 hours.

Estimated average hours per response: 4 hours.

Number of respondents: 5,638.

Small businesses are not affected.

General description of report: This information collection is mandatory; Section 5(c) of the Bank Holding Company Act (BHC Act) (12 U.S.C. 1844(c)); Section 9 of the FRA (12 U.S.C. 321); Section 25 of the FRA (12 U.S.C. 601–604a); Section 25A of the FRA (12 U.S.C. 611-631); and, Regulation Y (12 CFR part 225). Upon request from a respondent, certain information may be given confidential treatment pursuant to the Freedom of Information Act (5 U.S.C. §§ 552(b)(4) and (6)).

Abstract: All top-tier BHCs file the FR Y–6 which collects financial data, an organization chart and information about shareholders. The Federal Reserve uses the data to monitor holding company operations and determine holding company compliance with the provisions of the Bank Holding Company Act (BHC Act) and Regulation Y (12 CFR 225). The FR Y–6A is an event-generated report filed by top-tier bank holding companies and unaffiliated state member banks to report changes in regulated investments and activities made pursuant to the Bank Holding Company Act and Regulation Y. The report collects information relating to acquisitions, divestitures, changes in activities, and legal authority. The number of FR Y–6As submitted varies depending on the reportable activity engaged in by each bank holding company.

Current actions: The FR Y–6 organization charts would be revised to exclude small merchant banking investments and to include parallel language from the reportable entities sections of the proposed FR Y–10 instructions, as appropriate. To reduce respondent burden and make the forms easier to use, the Federal Reserve proposes to reformat the FR Y–6A into a new form, the FR Y–10. The proposed FR Y–10 and FR Y–10F forms would make the reporting of structure data for domestic and foreign banking organizations more similar. In addition to the formatting changes, the following changes would be made to the data content currently collected on the FR Y–6A: increase the thresholds for investments to be included, reduce the types of investments to be included, and streamline the method of reporting percentage of ownership for nonbanking investments. Reporting fewer investments will reduce reporting burden. In addition, reporting of legal authority (regulatory) and activity codes would be simplified.

2. *Report title:* Annual Report of Foreign Banking Organizations (FR Y–7) and Foreign Banking Organization Structure Report on U.S. Banking and Nonbanking Activities (FR Y–7A)

Agency form number: FR Y–7 and FR Y–7A

OMB control number: 7100–0125

Frequency: annual, event-generated

Reporters: foreign banking organizations

Annual reporting hours: 3,761

Estimated average hours per response: 11.5 hours

Number of respondents: 327

Small businesses are not affected.

General description of report: This information collection is mandatory; Section 5(c) of the BHC Act (12 U.S.C. 1844(c)); Section 7 and 13(a) of the International Banking Act of 1978 (12 U.S.C. 3106 and 3108 (a)); Section 25 of

the FRA (12 U.S.C. 601–604a); Section 25A of the FRA (12 U.S.C. 611–631); and, Regulation Y (12 CFR part 225). Upon request from a respondent, certain information may be given confidential treatment pursuant to the Freedom of Information Act (5 U.S.C. §§ 552(b)(4) and (6)).

Abstract: The FR Y–7 is a report filed by all FBOs that engage in banking in the United States, either directly or indirectly, to update their financial and organizational information. The Federal Reserve uses information to assess an FBO's ability to be a continuing source of strength to its U.S. banking operations and to determine compliance with U.S. laws and regulations. The FR Y–7A is a structural report completed by foreign banking organizations that engage in banking in the United States, either indirectly through a subsidiary bank, Edge or agreement corporation, or commercial lending company, or directly through a branch or agency. The information contained in this report is used by the Federal Reserve System to assess the foreign banking organization's ability to be a continuing source of strength to its U.S. banking operations and to determine compliance with U.S. laws and regulations.

Current actions: The FR Y–7 would be revised to include information on business measurement tests currently included on the FR Y–7A. Also, the due date would be changed to 90 calendar days after the respondent's fiscal year end to be consistent with the FR Y–6. The FR Y–7 organization charts would be revised to exclude small merchant banking investments and to include parallel language from the reportable entities sections of the proposed FR Y–10F instructions, as appropriate. To reduce respondent burden and make the forms easier to use, the Federal Reserve proposes to reformat the FR Y–7A into a new form, the FR Y–10F. The proposed FR Y–10F and FR Y–10 forms would make the reporting of structure data for foreign banking organizations and domestic more similar. In addition to the formatting changes, the following changes would be made to the data content currently collected on the FR Y–7A: increase the thresholds for investments to be included, reduce the types of investments to be included, and streamline the method of reporting percentage of ownership for nonbanking investments. Reporting fewer investments will reduce reporting burden. In addition, reporting of legal authority (regulatory) and activity codes would be simplified. For consistency purposes, FBOs, which currently file on an annual basis, would report the required structure information on an event-generated basis. The FR Y–10F report would also include data on managed non-U.S. branches, not included on the FR Y–7A report.

Proposal to Approve Under OMB Delegated Authority the Revision, Without Extension, of the Following Report

Report title: Report of Changes in Foreign Investments Made Pursuant to Regulation K

Agency form number: FR 2064

OMB control number: 7100–0109

Frequency: event-generated

Reporters: BHCs, member banks, and Edge and agreement corporations

Annual reporting hours: 64

Estimated average hours per response: .40 hours

Number of respondents: 40

Small businesses are not affected.

General description of report: This information collection is mandatory; Section 5(c) of the BHC Act (12 U.S.C. 1844(c)); Section 7 and 13(a) of the International Banking Act of 1978 (12 U.S.C. 3106 and 3108 (a)); Section 25 of the FRA (12 U.S.C. 601–604a); Section 25A of the FRA (12 U.S.C. 611–631); and, Regulation K (12 CFR part 211.7(c)); and is given confidential treatment (5 U.S.C. 552(b)(4) and (b)(6)).

Abstract: The Report of Changes in Foreign Investments Made Pursuant to Regulation K is an event-generated report filed by BHCs, member banks, and Edge and agreement corporations to record changes in their international investments. The Federal Reserve uses the information to monitor investments in the international operations of U.S. banking organizations and to fulfill its supervisory responsibilities under Regulation K.

Current Actions: The FR 2064 would be revised to include only the information on historical cost of investments, as required by Regulation K; structure information would be moved to the proposed FR Y–10. Also, the threshold for reporting these foreign investments would be raised, and the reporting frequency of the FR 2064 would be changed from event-generated to quarterly.

Proposal To Approve Under OMB Delegated Authority the Implementation of the Following Reports

Report title: Report of Changes in Organizational Structure (FR Y–10) and Report of Changes in FBO Organizational Structure (FR Y–10F).

Agency form number: FR Y–10 and FR Y–10F.

Frequency: event-generated.

Reporters: FR Y–10: bank holding companies, member banks not affiliated with a bank holding company, Edge and agreement corporations; FR Y–10F: foreign banking organizations.

Annual reporting hours: FR Y–10: 12,240 hours; FR Y–10F: 2,044 hours.

Estimated average hours per response: 1.25 hours.

Number of respondents: FR Y–10: 2,448; FR Y–10F: 327.

Small businesses are not affected.

General description of report: These information collections are mandatory; Section 5(c) of the Bank Holding Company Act (BHC Act) (12 U.S.C. 1844(c)); Section 4 of the BHC Act (12 U.S.C. 1843(k)); Section 25 of the FRA (12 U.S.C. 601–604a); Section 25A of the FRA (12 U.S.C. 611–631); and, Regulation Y (12 CFR part 225); FR Y–10 only—Section 9 of the FRA (12 U.S.C. 321); FR Y–10F only—Section 7 and 13(a) of the international Banking Act of 1978 (12 U.S.C. 3106 and 3108 (a)). Upon request from a respondent, certain information may be given confidential treatment pursuant to the Freedom of Information Act (5 U.S.C. §§ 552(b)(4) and (6)).

Current actions: To reduce burden and make the forms easier to use, the Federal Reserve proposes to reformat the FR Y–6A and FR Y–7A into two forms, the FR Y–10 and FR Y–10F, respectively. These forms would make the reporting of structure data for domestic and foreign banking organizations more similar. In addition to the formatting changes, the following changes would be made to the data content currently collected on the FR Y–6A and FR Y–7A: increase the thresholds for investments to be included, reduce the types of investments to be included, and streamline the method of reporting percentage of ownership for nonbanking investments. In addition, reporting of legal authority (regulatory) and activity codes would be simplified. To improve the timeliness of the data, the reporting schedule of the FR Y–10 and FR Y–10F reports would vary for different types of transactions. For consistency purposes, FBOs, which currently file on an annual basis, would report the required structure information on an event-generated basis. The FR Y–10F report would also include data on managed non-U.S. branches, not included on the FR Y–7A report. In addition structure information would be moved from the FR 2064 to the FR Y–10.

In particular the Federal Reserve is requesting comment on the following:

The Federal Reserve considered additional alternatives for reducing reporting burden for these reports. One possibility would be a materiality test for reporting nonbanking companies

(such as insurance and securities companies) that do not file financial reports with the Federal Reserve System. The Federal Reserve solicits comment on whether such a materiality test would be helpful, and, if so, how this should be defined. The FR Y–6 and FR Y–7 include organization charts, which would collect information about entities that would not be reportable on the proposed FR Y–10 and FR Y–10F. The Federal Reserve solicits comment on whether reporters would find it easier to annotate the organization charts to show the entities that are not reportable on the proposed new reports or to list those entities separately.

The proposed FR Y–10 and FR Y–10F would collect information about a reportable entity's primary activity, and the proposed definition of 'primary' is based on revenue. The Federal Reserve solicits comment on whether gross or net revenue is appropriate for this definition or, as an alternative, whether assets should be used.

The Federal Reserve also solicits comments on whether reporters would find NAICS codes useful in describing the activities of their nonbanking entities.

Board of Governors of the Federal Reserve System, September 15, 2000.

Jennifer J. Johnson,

Secretary of the Board.

[FR Doc. 00–24156 Filed 9–19–00; 8:45 am]

BILLING CODE 6210–01–P

FEDERAL RESERVE SYSTEM

Formations of, Acquisitions by, and Mergers of Bank Holding Companies

The companies listed in this notice have applied to the Board for approval, pursuant to the Bank Holding Company Act of 1956 (12 U.S.C. 1841 *et seq.*) (BHC Act), Regulation Y (12 CFR Part 225), and all other applicable statutes and regulations to become a bank holding company and/or to acquire the assets or the ownership of, control of, or the power to vote shares of a bank or bank holding company and all of the banks and nonbanking companies owned by the bank holding company, including the companies listed below.

The applications listed below, as well as other related filings required by the Board, are available for immediate inspection at the Federal Reserve Bank indicated. The application also will be available for inspection at the offices of the Board of Governors. Interested persons may express their views in writing on the standards enumerated in the BHC Act (12 U.S.C. 1842(c)). If the proposal also involves the acquisition of a nonbanking company, the review also includes whether the acquisition of the nonbanking company complies with the standards in section 4 of the BHC Act (12 U.S.C. 1843). Unless otherwise noted, nonbanking activities will be conducted throughout the United States. Additional information on all bank holding companies may be obtained from the National Information Center website at www.ffiec.gov/nic/.

Unless otherwise noted, comments regarding each of these applications must be received at the Reserve Bank indicated or the offices of the Board of Governors not later than October 16, 2000.

A. Federal Reserve Bank of Richmond (A. Linwood Gill, III, Vice President) 701 East Byrd Street, Richmond, Virginia 23261–4528:

1. BB&T Corporation, Winston-Salem, North Carolina; to merge with FCNB Corp, Frederick, Maryland, and thereby indirectly acquire FCNB Bank, Frederick, Maryland.

Board of Governors of the Federal Reserve System, September 15, 2000.

Jennifer J. Johnson,

Secretary of the Board.

[FR Doc. 00–24157 Filed 9–19–00; 8:45 am]

BILLING CODE 6210–01–P

FEDERAL RESERVE SYSTEM

Sunshine Act Meeting

AGENCY HOLDING THE MEETING: Board of Governors of the Federal Reserve System.

TIME AND DATE: 10 a.m., Monday, September 25, 2000.

PLACE: Marriner S. Eccles Federal Reserve Board Building, 20th and C Streets, NW., Washington, D.C. 20551.

STATUS: Closed.

MATTERS TO BE CONSIDERED:

1. Personnel actions (appointments, promotions, assignments, reassignments, and salary actions) involving individual Federal Reserve System employees.

2. Any items carried forward from a previously announced meeting.

CONTACT PERSON FOR MORE INFORMATION: Lynn S. Fox, Assistant to the Board; 202–452–3204.

SUPPLEMENTARY INFORMATION: You may call 202–452–3206 beginning at approximately 5 p.m. two business days before the meeting for a recorded announcement of bank and bank holding company applications scheduled for the meeting; or you may contact the Board's Web site at http://www.federalreserve.gov for an electronic announcement that not only lists applications, but also indicates procedural and other information about the meeting.

Dated: September 15, 2000.

Jennifer J. Johnson,

Secretary of the Board.

[FR Doc. 00–24193 Filed 9–15–00; 5:01 pm]

BILLING CODE 6210–01–P

DEPARTMENT OF HEALTH AND HUMAN SERVICES

Centers for Disease Control and Prevention

Clinical Laboratory Improvement Advisory Committee (CLIAC): Notice; Correction

In accordance with section 10(a)(2) of the Federal Advisory Committee Act (Pub. L. 92–463), the Centers for Disease Control and Prevention (CDC) announces the following committee notice correction.

This notice announces the correction of previously announced meeting in the **Federal Register:** August 25, 2000 (Volume 65, Number 166) [Notices—Page 51832]

ACTION: Notice; correction.

Name: Clinical Laboratory Improvement Advisory Committee (CLIAC).

Times and Dates:

8:30 a.m.—5 p.m., September 27, 2000
8:30 a.m.—3:30 p.m., September 28, 2000

Place: CDC, Koger Center, Williams Building, Conference Rooms 1802 and 1805, 2877 Brandywine Road, Atlanta, Georgia 30341.

Status: Open to the public, limited only by the space available. The meeting room accommodates approximately 85 people.

Purpose: This committee is charged with providing scientific and technical advice and guidance to the Secretary of Health and Human Services, the Assistant Secretary for Health, and the Director, CDC, regarding the need for, and the nature of, revisions to the standards under which clinical laboratories are regulated; the impact of proposed revisions to the standards; and the modification of the standards to accommodate technological advances.

Matters to be Discussed: This agenda has been updated since previously published on August 25, 2000. The agenda will include an orientation of new members. The morning session of the first day will be devoted to the orientation which consists of providing

background information on the Clinical Laboratory Improvement Amendments of 1988 (CLIA) program. The revised agenda also will include the workgroup report on specimens and test systems not currently regulated under CLIA, the criteria and process for waiver, and updates from CDC, Food and Drug Administration and Health Care Financing Administration.

The Committee solicits oral and written testimony on specimens and test systems not currently regulated under CLIA. Requests to make an oral presentation should be submitted in writing to the contact person listed below by close of business, September 20, 2000. All requests to make oral comments should contain the name, address, telephone number, and organizational affiliation of the presenter.

Written comments should not exceed five single-spaced typed pages in length and should be received by the contact person listed below by close of business, September 20, 2000.

Agenda items are subject to change as priorities dictate.

CONTACT PERSON FOR ADDITIONAL INFORMATION: Rhonda Whalen, Acting Chief, Laboratory Practice Standards Branch, Division of Laboratory Systems, Public Health Practice Program Office, CDC, 4770 Buford Highway, NE, Mailstop F–11, Atlanta, Georgia 30341–3724, telephone 770/488–8042, fax 770/488–8279.

The Director, Management Analysis and Services Office, has been delegated the authority to sign **Federal Register** notices pertaining to announcements of meetings and other committee management activities for both CDC and the Agency for Toxic Substances and Disease Registry.

Dated: September 6, 2000.

Carolyn J. Russell,

Director, Management Analysis and Services Office, Centers for Disease Control and Prevention.

[FR Doc. 00–24106 Filed 9–19–00; 8:45 am]

BILLING CODE 4163–18–P

DEPARTMENT OF HEALTH AND HUMAN SERVICES

Food and Drug Administration

Streamlining the Blood Donor History Questionnaire; Public Workshop

AGENCY: Food and Drug Administration, HHS.

ACTION: Notice.

The Food and Drug Administration (FDA) is announcing a public workshop entitled ''Streamlining the Blood Donor History Questionnaire.'' The purpose of the public workshop is to streamline the blood donor history questionnaire without compromising the safety of the nation's blood supply. The public workshop is jointly sponsored by FDA and the American Association of Blood Banks.

Date and Time: The public workshop will be held on October 16, 2000, from 8:30 a.m. to 5 p.m.

Location: The public workshop will be held at the Lister Hill Conference Center, National Institutes of Health, Building 38A, 8600 Rockville Pike, Bethesda, MD 20894.

Contact: Joseph Wilczek, Center for Biologics Evaluation and Research (HFM–350), Food and Drug Administration, 1401 Rockville Pike, Rockville, MD 20852–1448, 301–827–6129, FAX 301–827–2843.

Registration: Mail or fax your registration information (including name, title, firm name, address, telephone, and fax number) to Joseph Wilczek (address above) by Friday, October 6, 2000. There is no registration fee for the public workshop. Seating is limited, therefore interested parties are encouraged to register early. Registration at the site will be done on a space available basis on the day of the public workshop, beginning at 7:30 a.m. If you need special accommodations due to a disability, please contact Joseph Wilczek at least 7 days in advance.

Agenda: The public workshop is expected to address, but is not limited to, the following issues and topics: (1) The role of the blood donor interview in assuring blood safety; (2) overview of past efforts to improve the donor history questionnaire; (3) different methodologies in performing donor history evaluations; (4) validating the donor history questionnaire as a tool for reducing and eliminating risks to the blood supply; (5) analysis of error and accident reports and post donation information that resulted from inaccurate or misleading donor history responses; and (6) suggestions on how the donor questionnaire can be streamlined without compromising either donor, product, or recipient safety.

The public workshop agenda will be posted on the FDA Internet as soon as the information becomes available. The FDA Internet address is http://www.fda.gov/cber/whatsnew.htm.

Transcripts: Transcripts of the public workshop may be requested in writing from the Freedom of Information Office (HFI–35), Food and Drug Administration, 5600 Fishers Lane, rm. 12A–16, Rockville, MD 20857, approximately 15 working days after the meeting at a cost of 10 cents per page. The transcript will also be available on the FDA Internet site at http://www.fda.gov/cber/minutes/workshop-min.htm.

Dated: September 14, 2000.

William K. Hubbard,

Senior Associate, Commissioner for Policy, Planning, and Legislation.

[FR Doc. 00–24124 Filed 9–19–00; 8:45 am]

BILLING CODE 4160–01–F

DEPARTMENT OF HEALTH AND HUMAN SERVICES

Food and Drug Administration

Evaluation of New Vaccines: How Much Safety Data?; Public Workshop

AGENCY: Food and Drug Administration, HHS.

ACTION: Notice of public workshop.

The Food and Drug Administration (FDA) is announcing the following public workshop: ''Evaluation of New Vaccines: How Much Safety Data?'' The purpose of the workshop is to address issues in the safety evaluation of new vaccines, including the feasibility and desirability of performing larger pre-licensure trials of vaccines in order to provide more precise measures of safety prior to widespread use, and to discuss the optimal balance between pre-licensure and post-licensure evaluation of vaccine safety.

Date and Time: The workshop will be held on November 14, 2000, from 1 p.m. to 5:30 p.m. and on November 15, 2000, from 8:30 a.m. to 5 p.m.

Location: The workshop will be held at the Lister Hill Conference Center, National Institutes of Health, Bldg. 38A, 8600 Rockville Pike, Bethesda, MD 20814.

Contact:

For information regarding this notice: Nathaniel L. Geary, Center for Biologics Evaluation and Research (HFM–17), Food and Drug Administration, 1401 Rockville Pike, Rockville, MD 20852–1448, 301–827–6210, FAX 301–827–1944.

For information regarding the workshop: Mary A. Foulkes, Center for Biologics Evaluation and Research (HFM–210), Food and Drug Administration, 1401 Rockville Pike, Rockville, MD 20852–1448, 301–827–3034, FAX 301–827–3529.

For registration information: Sandy L. Coffin, Center for Biologics Evaluation and Research (HFM–210), Food and Drug Administration, 1401 Rockville Pike, Rockville, MD 20852–1448, 301–

827–3034, FAX 301–827–3529, or e-mail: coffins@cber.fda.gov.

Registration: Send or fax your registration form (including name, title, firm name, address, telephone, fax number, and e-mail address) to the Sandy L. Coffin (address above) by Friday, October 20, 2000. There is no registration fee for the workshop, however, seating is limited. Therefore, interested parties are encouraged to register early.

You may get a copy of the registration form and additional information about this workshop from the Internet at http://www.fda.gov/cber/meetings/vac111400.htm.

If you need special accommodations due to a disability, please contact Sandy L. Coffin (address above) at least 7 days in advance.

SUPPLEMENTARY INFORMATION: This workshop is cosponsored by the following organizations: FDA, Center for Biologics Evaluation and Research; National Institutes of Health, National Institute of Allergy and Infectious Diseases; Centers for Disease Control and Prevention (CDC); Health Resources and Services Administration; and National Vaccine Program Office, CDC. The workshop will be of primary interest to public health professionals evaluating new vaccines and to vaccine manufacturers developing new vaccines. The objectives of the workshop are to: Describe the evolution of new vaccine evaluation and the current approaches to postmarketing safety evaluation, discuss public concerns about vaccine safety, and explore alternatives for enhancing postmarketing safety evaluation and the value and feasibility of larger pre-licensure trials.

Transcripts: Transcripts of the meeting may be requested in writing from the Freedom of Information Office (HFI–35), Food and Drug Administration, 5600 Fishers Lane, rm. 12A–16, Rockville, MD 20857, approximately 15 working days after the meeting at a cost of 10 cents per page. The transcript will also be available at the Center for Biologics Evaluation and Research Internet site at http://www.fda.gov/cber/minutes/workshop-min.htm.

Dated: September 14, 2000.

William K. Hubbard,

Senior Associate, Commissioner for Policy, Planning, and Legislation.

[FR Doc. 00–24125 Filed 9–19–00; 8:45 am]

BILLING CODE 4160–01–F

DEPARTMENT OF HOUSING AND URBAN DEVELOPMENT

[Docket No. FR–4561–N–59]

Notice of Submission of Proposed Information Collection to OMB; Fair Housing Literacy Survey

AGENCY: Office of the Chief Information Officer, HUD.

ACTION: Notice.

SUMMARY: The proposed information collection requirement described below has been submitted to the Office of Management and Budget (OMB) for review, as required by the Paperwork Reduction Act. The Department is soliciting public comments on the subject proposal.

DATES: *Comments Due Date:* October 20, 2000.

ADDRESSES: Interested persons are invited to submit comments regarding this proposal. Comments should refer to the proposal by name and/or OMB approval number and should be sent to: Joseph F. Lackey, Jr., OMB Desk Officer, Office of Management and Budget, Room 10235, New Executive Office Building, Washington, DC 20503.

FOR FURTHER INFORMATION CONTACT: Wayne Eddins, Reports Management Officer, Q, Department of Housing and Urban Development, 451 Seventh Street, Southwest, Washington, DC 20410; e-mail WayneEddins@HUD.gov; telephone (202) 708–2374. This is not a toll-free number. Copies of the proposed forms and other available documents submitted to OMB may be obtained from Mr. Eddins.

SUPPLEMENTARY INFORMATION: The Department has submitted the proposal for the collection of information, as described below, to OMB for review, as required by the Paperwork Reduction Act (44 U.S.C. Chapter 35). The Notice lists the following information: (1) the title of the information collection proposal; (2) the office of the agency to collect the information; (3) the OMB approval number, if applicable; (4) the description of the need for the information and its proposed use; (5) the agency form number, if applicable; (6) what members of the public will be affected by the proposal; (7) how frequently information submissions will be required; (8) an estimate of the total number of hours needed to prepare the information submission including number of respondents, frequency of response, and hours of response; (9) whether the proposal is new, an extension, reinstatement, or revision of an information collection requirement; and (10) the name and telephone number of an agency official familiar with the proposal and of the OMB Desk Office for the Department.

This Notice also lists the following information:

Title of Proposal: Fair Housing Literacy Survey.

OMB Approval number: 2528–XXX.

Form Numbers: None.

Description of the Need for the Information and Its Proposed Use: The purpose is to survey the extent if public awareness of the nation's fair housing laws.

Respondents: Individuals or Households.

Frequency of Submission: Biannually.

Reporting Burden:

Number of respondents	×	Frequency of response	×	Hours per response	=	Burden hours
1500		1		0.1		175

Total Estimated Burden Hours: 175.

Status: New.

Authority: Section 3507 of the Paperwork Reduction Act of 1995, 44 U.S.C. 35, as amended.

Dated: September 13, 2000.

Wayne Eddins,

Departmental Reports Management Officer, Office of the Chief Information Officer.

[FR Doc. 00–24102 Filed 9–19–00; 8:45 am]

BILLING CODE 4210–01–M

DEPARTMENT OF HOUSING AND URBAN DEVELOPMENT

[Docket No. FR–4561–N–60]

Notice of Submission of Proposed Information Collection to OMB; HUD 2020 Partners Survey

AGENCY: Office of the Chief Information Officer, HUD.

ACTION: Notice.

SUMMARY: The proposed information collection requirement described below has been submitted to the Office of Management and Budget (OMB) for review, as required by the Paperwork Reduction Act. The Department is soliciting public comments on the subject proposal.

DATES: Comments Due Date: October 20, 2000.

ADDRESSES: Interested persons are invited to submit comments regarding this proposal. Comments should refer to the proposal by name and/or OMB approval number and should be sent to: Joseph F. Lackey, Jr., OMB Desk Officer, Office of Management and Budget, Room 10235, New Executive Office Building, Washington, DC 20503.

FOR FURTHER INFORMATION CONTACT: Wayne Eddins, Reports Management Officer, Q, Department of Housing and Urban Development, 451 Seventh Street, Southwest, Washington, DC 20410; e-mail Wayne__Eddins@HUD.gov; telephone (202) 708–2374. This is not a toll-free number. Copies of the proposed forms and other available documents submitted to OMB may be obtained from Mr. Eddins.

SUPPLEMENTARY INFORMATION: The Department has submitted the proposal for the collection of information, as described below, to OMB for review, as required by the Paperwork Reduction Act (44 U.S.C. Chapter 35). The Notice lists the following information: (1) the title of the information collection proposal; (2) the office of the agency to collect the information; (3) the OMB approval number, if applicable; (4) the description of the need for the information and its proposed use; (5) the agency form number, if applicable; (6) what members of the public will be affected by the proposal; (7) how frequently information submissions will be required; (8) an estimate of the total number of hours needed to prepare the information submission including number of respondents, frequency, and hours of response; (9) whether the proposal is new, an extension, reinstatement, or revision of an information collection requirement; and (10) the name and telephone number of an agency official familiar with the proposal and of the OMB Desk Officer for the Department.

This Notice also lists the following information:

Title of Proposal: HUD 2020 Partners.

OMB Approval Number: 2528–XXXX.

Form Numbers: None.

Description of the Need for the Information and its Proposed Use: The purpose is to survey the perceptions of HUD partner groups about HUD performance and changes in that HUD 2020 Management reforms.

Respondents: Business or other for-profit, Not-for-profit institutions, State, Local or Tribal Government.

Frequency of Submission: Biannually.

Reporting Burden:

Number of respondents	×	Frequency of response	×	Hours per response	Burden hours
2,418		1		0.25	605

Total Estimated Burden Hours: 605.

Status: New.

Authority: Section 3507 of the Paperwork Reduction Act of 1995, 44 U.S.C. 35, as amended.

Dated: September 13, 2000.

Wayne Eddins,

Departmental Reports Management Officer, Office of the Chief Information Officer.

[FR Doc. 00–24103 Filed 9–19–00; 8:45 am]

BILLING CODE 4210–01–M

DEPARTMENT OF THE INTERIOR

Fish and Wildlife Service

DEPARTMENT OF COMMERCE

National Oceanic and Atmospheric Administration

RIN 1018–AG25

Policy Regarding Controlled Propagation of Species Listed Under the Endangered Species Act

AGENCIES: Fish and Wildlife Service, Interior; National Marine Fisheries Service, Commerce.

ACTION: Notice of policy.

SUMMARY: This policy, published jointly by the Fish and Wildlife Service (FWS) and the National Marine Fisheries Service (NMFS), jointly referred to as the Services, addresses the role of controlled propagation in the conservation and recovery of species listed as endangered or threatened under the Endangered Species Act of 1973 (as amended) (Act). The policy provides guidance and establishes consistency for use of controlled propagation as a component of a listed species recovery strategy. This policy will help to ensure smooth transitions between various phases of conservation efforts such as propagation, reintroduction and monitoring, and foster efficient use of available funds. The policy supports the controlled propagation of listed species when recommended in an approved recovery plan or when necessary to prevent extinction of a species. Appropriate uses of controlled propagation include supporting recovery related research, maintaining refugia populations, providing plants or animals for reintroduction or augmentation of existing populations, and conserving species or populations at risk of imminent extinction or extirpation.

DATES: The final policy on controlled propagation is effective October 20, 2000.

ADDRESSES: You may view comments and materials received during the public comment period for the draft policy document by appointment during normal business hours in Room 420, 4401 North Fairfax Drive, Arlington, Virginia 22203.

FOR FURTHER INFORMATION CONTACT: David Harrelson, Division of Endangered Species, U.S. Fish and Wildlife Service at the above address (703/358–2171) or by e-mail at David_Harrelson@fws.gov; or Marta Nammack, Office of Protected Resources, National Marine Fisheries Service (301/713–1401) or by e-mail at Marta.Nammack@noaa.gov.

SUPPLEMENTARY INFORMATION: The Endangered Species Act specifically charges us with the responsibility for identification, protection, management, and recovery of species of plants and animals in danger of extinction. Fulfilling this responsibility requires the protection and conservation of not only individual organisms and populations, but also the genetic and ecological resources that listed species represent. Long-term viability depends on maintaining genetic adaptability within each species. Species, as defined in section 3(15) of the Act, includes ''any subspecies of fish or wildlife or plants, and any distinct population segment of any species of vertebrate fish or wildlife which interbreeds when mature.'' Though the Act emphasizes the restoration of listed species in their

natural habitats, section 3(3) of the Act recognizes propagation as a tool available to us to achieve this end. The controlled propagation of animals and plants in certain situations is an essential tool for the conservation and recovery of listed species. In the past, we have used controlled propagation to reverse population declines and to successfully return listed species to suitable habitat in the wild. To support the goal of restoring endangered and threatened animals and plants, we are obligated to develop sound policies based on the best available scientific and commercial information.

Summary of Comments and Recommendations

A draft policy on this subject was published on February 7, 1996 (61 FR 4716), and invited public comment. We received 47 comments. Twenty-four were from zoos, aquariums, botanical gardens, and conservation organizations, 3 from academic institutions, 6 from private individuals and business organizations, 2 from government organizations, and 12 from State natural resource agencies. Nearly all comments received were supportive of the policy and its goals. Comments that expressed concerns or criticisms were limited, though quite specific. We reviewed all comments received, and suggestions or clarifications have been incorporated into the final policy text. The following describes the major issues identified and our responses.

Issue: The draft policy, as published, would have a significant impact in terms of increased workload on the Services, zoological parks and aquariums, private organizations, and individual citizens.

Response: We acknowledge this concern and have modified the policy to reduce impacts to the zoo and aquarium community, botanical facilities, Federal fish hatcheries, and others who may be involved in propagation of listed species. As amended, this final policy is not expected to have a significant impact on organizations or individuals involved in propagation of listed species. The majority of zoological parks and aquaria that are involved in programs assisting the recovery of endangered and threatened animal species native to the United States are members of the American Zoo and Aquarium Association (AZA). The AZA has developed numerous strategies, protocols, and standards that address concerns associated with captive animal populations involved in conservation-based breeding programs. This final policy encourages the Services, and others, to follow as may be practical, the protocols and standards of the AZA, and other appropriate organizations, for the controlled propagation of animal species. The Center for Plant Conservation (CPC) is similar to the AZA in that this organization consists of member botanical gardens and arboreta that are involved in preventing the extinction of native plants, including those federally listed as endangered or threatened. When practical, the Services and others are encouraged to use the protocols and standards of the CPC, and other appropriate organizations, when propagating listed plant species.

Those individuals or organizations that currently have permits to keep listed species are exempt from this policy for the duration of the permit unless the Regional Director (FWS) or Assistant Administrator (NMFS) determines otherwise. For example, a permit holder implementing activities recommended in an approved recovery plan is exempt and would not need to reapply for a new permit. We have made substantial efforts to avoid adverse impacts, economic or otherwise, in order that cooperative recovery partnership opportunities may be maintained or increased with qualified organizations and individuals.

Issue: The policy would apply to research activities identified in recovery plans in which controlled propagation or unintentional propagation may occur.

Response: Research identified in recovery plans, including research that may lead to development of a controlled propagation capacity, is not covered by this policy because the intent of such research is not the production of individuals for introduction into the wild. Should offspring that are the product of research efforts be proposed for introduction into the wild, such offspring and any proposed reintroductions will be subject to this policy.

Should circumstances arise in the course of implementing recovery activities, including research, in which application of this policy is deemed necessary for the benefit of the listed species, the decision to apply the policy will rest with the Regional Director or Assistant Administrator.

Research on species with short lifespans (*e.g.*, 1 to 2 years) that requires maintenance of a captive population not intended for release to the wild is exempt from this policy. However, all activities involving reproduction of a listed U.S. species must meet the requirements of the Act, as well as any other legal and administrative obligations. All persons or institutions conducting approved activities involving controlled propagation of listed species for purposes other than release in the wild will still be required to develop appropriate measures to address concerns identified under section E. 5. of this policy.

Issue: The policy would apply to foreign species being maintained and propagated in U.S. zoological and aquarium facilities or by private individuals.

Response: This policy only applies to species indigenous to the United States and its territories for which we have, or intend to prepare, recovery plans. We have exempted foreign species that are listed under the Act and being propagated or maintained in the United States for conservation purposes.

Issue: Requirements to develop genetics and reintroduction guidance documents for species being propagated for augmentation of existing populations or for the establishment of new populations in the wild are not practical.

Response: We recognize this concern and have modified the policy accordingly. In many instances there is insufficient biological knowledge of the listed species to develop detailed genetic management documents, and the requirement for these documents may unnecessarily burden conservation and recovery efforts. However, we strongly recommend development of these documents if adequate information is available. Furthermore, we reemphasize the recommendation in the draft policy that controlled propagation activities follow accepted standards, which include appropriate genetics management.

Issue: There are too many reporting requirements.

Response: We have reduced reporting requirements. However, we need to identify those listed species involved in controlled propagation programs, the level of production in these programs, and efforts to secure appropriate habitat for population augmentation, reintroduction, and recovery.

Issue: The requirement that controlled propagation be permitted only if indicated in an approved final recovery plan would place an unnecessary burden on Federal programs to revise existing recovery plans to meet this requirement.

Response: We do not agree. The recovery plans for most species for which controlled propagation is occurring have identified this action as a specific recovery task. Where controlled propagation is not identified as a task in the recovery plan, but has been subsequently determined to be necessary to the recovery of the species,

the plan would need to be amended or revised.

Required Determinations

1. Regulatory Planning and Review

In accordance with Executive Order 12866, this policy was submitted for review by the Office of Management and Budget. In accordance with the criteria set forth in Executive Order 12866, this policy is not a significant regulatory action. Under current and anticipated levels of activity, this policy will not result in an annual economic effect of $100 million or more. Moreover, this policy will not adversely affect an economic sector, productivity, jobs, the environment, or other units of government. The controlled propagation policy does not pertain to commercial products or activities or anything traded in the marketplace.

2. Regulatory Flexibility Act (5 U.S.C. 601 *et seq.*)

We certify that this policy will not have a significant economic effect on a substantial number of small entities. This policy does not apply to all species listed under the Act but only to those species native to the United States and its territories for which recovery plans exist or are expected to be developed. Furthermore, controlled propagation is restricted to those species for which such propagation is specifically recommended in an approved final recovery plan. Programs involving the controlled propagation of federally listed species are typically restricted to institutions such as the FWS's National Fish Hatcheries and Fish Technology Centers. Nongovernmental entities that may be involved in the controlled propagation of listed species are typically organizations with a high level of technical skill in the captive maintenance and breeding of plants and animals, such as zoos, aquaria, and botanical gardens. Rarely are academic institutions and even more infrequently, private individuals, involved in the controlled propagation of listed species for conservation and recovery purposes.

3. Small Business Regulatory Fairness Act (5 U.S.C. 804(2))

This is not a major rule under 5 U.S.C. 804(2). This policy will not have an annual effect on the economy of $100 million or more, produce increases in costs or prices for consumers, individual industries or Federal, State or local government agencies, affect economic competitiveness, or economically impact geographic regions in the United States or its territories.

4. Unfunded Mandates Reform Act (2 U.S.C. 1501 et seq.)

This policy does not impose an unfunded mandate on any State, Tribal, or local government or the private sector of $100 million or more per year.

5. Takings

In accordance with Executive Order 12630, this policy does not pose significant takings implications, and a takings implication assessment is not required. Implementation of this policy will not result in ''take'' of private property and will not alter the value of private property. Many reintroductions of propagated species occur exclusively on FWS, other Federal, or State lands, but reintroductions on private lands are not unknown. In such cases, the private entities work with the Services as willing partners to ensure the success of the reintroduction effort.

6. Federalism

In accordance with Executive Order 13132, this policy does not have sufficient federalism implications to warrant the preparation of a federalism assessment. It does not affect the structure or role of States, and will not have direct, substantial, or significant effects on States. Releases of propagated species typically occur on Federal or State lands. The States work with the Services as willing partners to ensure the success of reintroduction efforts.

7. Civil Justice Reform

In accordance with Executive Order 12988, the Department of the Interior's Office of the Solicitor has determined that this policy does not unduly burden the judicial system. The final policy provides clear standards, simplifies procedures, reduces burden, and is clearly written such that litigation risk is minimized.

8. Paperwork Reduction Act of 1995 (44 U.S.C. 3501 et seq.)

This policy does not contain any new information collection requirements for which Office of Management and Budget approval under the Paperwork Reduction Act is required. The OMB control number for the FWS is 1018–0094 and for NMFS is 0648–0230 and 0648–0402.

9. National Environmental Policy Act

We have analyzed this policy under the criteria of the National Environmental Policy Act of 1969 as amended, and have determined that the issuance of this policy is categorically excluded by the Department of the Interior in 516 DM 2, Appendix 1.10. The NMFS concurs with the Department of the Interior's determination that the issuance of this policy qualifies for a categorical exclusion and satisfies the categorical exclusion criteria in the National Oceanic and Atmospheric Administration 216–6 Administrative Order, Environmental Review Procedure. No further NEPA documentation is required.

10. Government-to-Government Relationship With Tribes

Though no reintroductions of captively propagated federally endangered or threatened species have been undertaken, in accordance with the President's memorandum of April 29, 1994, ''Government-to-Government Relations with Native American Tribal Governments'' (59 FR 22951) and 512 DM 2, we recognize the potential for such actions in the future and the obligation to relate to federally recognized Tribes on a government-to-government basis.

References Cited

A complete list of all references cited in this final policy is available on request from the Washington Office of the Division of Endangered Species (see **ADDRESSES** section).

Authors. The primary authors of this policy are David Harrelson of the Fish and Wildlife Service's Division of Endangered Species, Mail Stop 420 ARLSQ, 1849 C Street, NW, Washington, DC 20240 (703/358–2171), and Marta Nammack of the National Marine Fisheries Service's Protected Species Management Division, 1335 East-West Highway, Silver Spring, Maryland 20910 (301/713–1401).

Policy Statement

A. *What is the purpose of this policy?* This policy provides guidance and establishes consistency with respect to Fish and Wildlife Service (FWS) and National Marine Fisheries Service (NMFS), jointly called the Services, activities in which the controlled propagation of a listed species, as the term ''species'' is defined in section 3(15) of the Act, is implemented as a component of the recovery strategy for a listed species. It supports and promotes coordination between various phases of controlled propagation efforts such as propagation technology development, propagation for release, population augmentation, reintroduction, and monitoring. This policy will also contribute to the efficient use of funding resources.

Guidance is provided regarding the use of controlled propagation for:

- Preventing the extinction of listed species, subspecies, or populations;

• Recovery-oriented scientific research, including, but not restricted to, developing propagation methods and technology, and other actions that are expected to result in a net benefit to the listed taxon. Use of surrogates, while applicable to the recovery of listed species, is exempt from the requirements of this policy;

• Maintaining genetic vigor and demographic diversity of listed species, subspecies, or populations;

• Maintaining refugia populations for nearly extinct animals or plants on a temporary basis until threats to a listed species' habitat are alleviated, or necessary habitat modifications are completed, or when potentially catastrophic events occur (*e.g.*, chemical spills, severe storms, fires, flooding);

• Providing individuals for establishing new, self-sustaining populations necessary for recovery of the listed species; and

• Supplementing or enhancing extant populations to facilitate recovery of the listed species.

B. *What is the scope of this policy?* This policy applies to all pertinent organizational elements of both Services, notwithstanding those differences in administrative procedures and policies as noted. Exceptions to this policy appear in section F. This policy pertains to all efforts requiring permits under 50 CFR 17 subparts C and D, funded, authorized, or carried out by us that are conducted to propagate threatened or endangered species by:

• Establishing or maintaining refugia populations;

• Producing individuals for research and technology development needs;

• Producing individuals for supplementing extant populations; and

• Producing individuals for reintroduction to suitable habitat within the species' historic range.

C. *Why is this policy necessary?* The controlled propagation of animals and plants in certain situations is an essential tool for the conservation and recovery of listed species. In the past, we have used controlled propagation to reverse population declines and to successfully return listed species to suitable habitat in the wild.

Though controlled propagation has a supportive role in the recovery of some listed species, the intent of the Act is ''to provide a means whereby the ecosystems upon which endangered species and threatened species depend may be conserved.'' Controlled propagation is not a substitute for addressing factors responsible for an endangered or threatened species' decline. Therefore, our first priority is to recover wild populations in their natural habitat wherever possible, without resorting to the use of controlled propagation. This position is fully consistent with the Act.

We recognize that genetic and ecological risks may be associated with introducing to the wild, animals and plants bred and reared in a controlled environment. When considering controlled propagation as a recovery option, the potential benefits and risks must be assessed and alternatives requiring less intervention objectively evaluated. If controlled propagation is identified as an appropriate strategy for the recovery of a listed species, it must be conducted in a manner that will, to the maximum extent possible, preserve the genetic and ecological distinctiveness of the listed species and minimize risks to existing wild populations.

We recognize that for many species, information available for detailed genetics conservation management or assessment of risks associated with reintroduction may be insufficient. Therefore, this policy does not specifically require written genetic management plans and ecological risk assessments to initiate or support controlled propagation programs. Additionally, acute conservation needs may legitimately outweigh delays that would be incurred by such a requirement. However, where sufficient biological and environmental information exists, and where conservation activities would not be unduly constrained, a formal assessment of ecological and genetic risks is strongly encouraged. Risks that must be evaluated in the planning of controlled propagation programs include the following specific examples:

• Removal of natural parental stock that may result in an increased risk of extinction by reducing the abundance of wild individuals and reducing genetic variability within naturally occurring populations;

• Equipment failures, human error, disease, and other potential catastrophic events that may cause the loss of some or all of the population being held or maintained in captivity or cultivation;

• The potential for an increased level of inbreeding or other adverse genetic effects within populations that may result from the enhancement of only a portion of the gene pool;

• Potential erosion of genetic differences between populations as a result of mixed stock transfers or supplementation;

• Exposure to novel selection regimes in controlled environments that may diminish a listed species' natural capacity to survive and reproduce in the wild;

• Genetic introgression, which may diminish local adaptations of the naturally occurring population;

• Increased predation, competition for food, space, mates, or other factors that may displace naturally occurring individuals, or interfere with foraging, migratory, reproductive, or other essential behaviors; and

• Disease transmission.

Controlled propagation programs must be undertaken in a manner that minimizes potentially adverse impacts to existing wild populations of listed species, and we must conduct controlled propagation programs in a manner that avoids additional listing actions.

D. *What are the definitions for terms used in this policy?* The following definitions apply:

Controlled environment—A controlled environment is one manipulated for the purpose of producing or rearing progeny of the species in question, and of a design intended to prevent unplanned escape or entry of plants, animals, or gametes, embryos, seeds, propagules, or other potential reproductive products.

Controlled propagation—Among animals, it includes natural or artificial matings, fertilization of sex cells, transfer of embryos, development of offspring, and grow-out of individuals of a species when the species is intentionally confined or the mating is directly intended by human intervention.

The term also includes the human-induced propagation of plants from seeds, spores, callus tissue, divisions, cuttings, or other plant tissue, or through pollination in a controlled environment.

• Defined in the context of this policy, controlled propagation refers to the production of individuals, generally within a managed environment, for the purpose of supplementing or augmenting a wild population(s), or reintroduction to the wild to establish new populations.

Intercross—Any instance of interbreeding or genetic exchange between individuals of different species, subspecies, or distinct population segments of a vertebrate species.

Phenotype—The expression of the genetic makeup of an organism through physical characteristics that make up its appearance.

Recovery priority system—The system used for assigning recovery priorities to listed species and to recovery tasks. Recovery priority is based on the degree of threat, recovery potential, taxonomic

distinctness, and presence of an actual or imminent conflict between the species' conservation, adverse human activities, and other threats.

Rescue and salvage—These terms refer to extreme conditions wherein a species or population segment at risk of extinction is brought into a controlled environment (i.e., refugia) on a temporary or permanent basis.

Taxon—A formal group of organisms of any rank or formal scientific classification.

E. *What is our Policy?* This policy is intended to address candidate, proposed, and listed species indigenous to the United States and its territories for which the Services, have, or intend to prepare, recovery plans. This policy focuses primarily on those activities involving gamete transfer and subsequent development and grow-out of offspring in a laboratory, botanical facility, zoo, hatchery, aquarium, or similarly controlled environment. This policy also addresses activities related to or preceding controlled propagation activities such as:

- Obtaining and rearing offspring for research;
- Procuring broodstock for future controlled propagation and augmentation efforts; or
- Holding offspring for a substantial portion of their development or through a life-stage that experiences poor survival in the wild.

The goals of this policy include coordinating recovery actions specific to controlled propagation activities; maximizing benefits to the listed species from controlled propagation efforts; assuring that appropriate recovery measures other than controlled propagation and that other existing recovery priorities are considered in making controlled propagation decisions; and ensuring prudent use of funds.

Our policy is that the controlled propagation of threatened and endangered species will be:

1. Used as a recovery strategy only when other measures employed to maintain or improve a listed species' status in the wild have failed, are determined to be likely to fail, are shown to be ineffective in overcoming extant factors limiting recovery, or would be insufficient to achieve full recovery. All reasonable effort should be made to accomplish conservation measures that enable a listed species to recover in the wild, with or without intervention (*e.g.*, artificial cavity provisioning), prior to implementing controlled propagation for reintroduction or supplementation.

2. Coordinated with conservation actions and other recovery measures, as appropriate or specified in recovery plans, that will contribute to, or otherwise support, the provision of secure and suitable habitat. Controlled propagation programs intended for reintroduction or augmentation must be coordinated with habitat management, restoration, and other species' recovery efforts.

3. Based on the specific recommendations of recovery strategies identified in approved recovery plans or supplements to approved recovery plans whenever practical. The recovery plan, in addressing controlled propagation, should clearly identify the necessity and role of this activity as a recovery strategy.

4. Based on specific consideration of the potential ecological and genetic effects of the removal of individuals for controlled propagation purposes on wild populations and the potential effects of introductions of artificially bred animals or plants on the receiving population and other resident species. Assessments of potential risks and benefits will be addressed, as required, through sections 7 and 10 of the Act and the National Environmental Policy Act (NEPA, 42 U.S.C. 4332) for proposed controlled propagation actions.

5. Based on sound scientific principles to conserve genetic variation and species integrity. Intercrossing will not be considered for use in controlled propagation programs unless recommended in an approved recovery plan; supported in an approved genetic management plan (if information is available to develop such a plan, and which may or may not be part of an approved recovery plan); implemented in a scientifically controlled and approved manner; and undertaken to compensate for a loss of genetic viability in listed taxa that have been genetically isolated in the wild as a result of human activity. Use of intercross individuals for species conservation will require the approval of the FWS Director or that of the NMFS Assistant Administrator, in accordance with all applicable policies.

6. Preceded, when practical, by the development of a genetics management plan based on accepted scientific principles and procedures. Controlled propagation protocols will follow accepted standards such as those employed by the American Zoo and Aquarium Association (AZA), the Center for Plant Conservation (CPC), and Federal agency protocols such as fish management guidelines to the extent practical. All efforts will be made by us and our cooperators to ensure that the genetic makeup of propagated individuals is representative of that in free-ranging populations and that propagated individuals are behaviorally and physiologically suitable for introduction. Determination of biological ''suitability'' may include, but should not necessarily be limited to, analysis of geomorphological similarities of habitat, genetic similarity, phenotypic characteristics, stock histories, habitat use, and other ecological, biological, and behavioral indicators. All controlled propagation programs will address the issue of disposition of individuals found to be:

(a) Unfit for introduction to the wild;
(b) Unfit to serve as broodstock;
(c) Surplus to program needs; or
(d) Surplus to the recovery needs for the species (*e.g.,* to preclude genetic and ecological swamping).

Controlled propagation activities should not be initiated without including consideration of these issues and obtaining required permits and other authorizations as necessary. Disposition of individuals surplus to program needs may include use for research or other appropriate purposes.

Programs involving the controlled propagation of listed species for research purposes identified in final recovery plans and in which progeny will not be reintroduced to the wild are exempt from this policy. Examples of exempt actions include research involving the determination of germination rates in plants and spawning success rates in fish. This exemption does not extend to the need for these activities to comply with any other applicable Federal or State permitting or regulatory requirements.

7. Conducted in a manner that takes all known precautions to prohibit the potential introduction or spread of diseases and parasites into controlled environments or suitable habitat.

8. Conducted in a manner that will prevent the escape or accidental introduction of individuals outside their historic range.

9. Conducted, when feasible, at more than one location in order to reduce the potential for catastrophic loss at a single facility when a substantial fraction of a species or important population segment is brought into captivity.

10. Coordinated, as appropriate, with organizations and qualified individuals both within and outside our agencies. We will cooperate with other Federal agencies and State, Tribal, and local governments.

11. Conducted in a manner that will meet our information needs and that will be in accordance with accepted protocols and standards. In the case of listed species for which traditional

studbooks or registrations are not practical, records of eggs, larvae, or other life-stages will be maintained.

12. With limited exceptions, implemented only after a commitment to funding is secured.

13. Prior to releases of propagated individuals, tied to development of a reintroduction plan, unless this information is already contained in an approved recovery plan, species survival plan, or equivalent document that has received the approval of the appropriate Service. Controlled propagation and reintroduction plans will identify measurable objectives and milestones for the proposed propagation and reintroduction effort. The controlled propagation and reintroduction plan should be based on strategies identified in the approved recovery plan. It should include protocols for health management, disease screening and disease-free certification, monitoring and evaluation of genetic, demographic, life-history, phenotypic, and behavioral characteristics, data collection, recordkeeping, and reporting as appropriate. On implementation, periodic evaluations must be made to assess project progress and consider new scientific information and the status of habitat conservation efforts.

14. Conducted in accordance with the regulations implementing the Endangered Species Act, Marine Mammal Protection Act, Animal Welfare Act, Lacey Act, Fish and Wildlife Act of 1956, and the Services' procedures relative to NEPA.

F. *Does this policy allow any exceptions?* Except as identified in this section, any exceptions to the above policy guidelines will require specific approval from the FWS Director or the NMFS Assistant Administrator on a case by case basis. The following circumstances have been anticipated and are exempted from this policy.

1. Pacific salmon are exempted from this policy. NMFS, as the lead Service for the recovery of listed Pacific salmon, has developed and will continue to use the interim policy (April 5, 1993, 58 FR 17573) addressing controlled propagation of these species. The NMFS interim artificial propagation policy more specifically addresses the biological needs of these species.

2. Cases where a listed species has an ephemeral reproductive stage or short (1–2 year) lifespan that necessitates controlled propagation to sustain the listed species in refugia, or to maintain a research population where there is no intent to release captive-bred individuals from that population into the wild, are exempt.

3. In the absence of an approved recovery plan, recommendations contained in recovery outlines, draft recovery plans, or made in writing by a recovery team may be used to justify controlled propagation as a necessary recovery measure for listed species in danger of imminent extinction or extirpation of critical populations. However, under such circumstances initiation of controlled propagation activities will require the Regional Director's or Assistant Administrator's approval.

4. Candidate and proposed species held in refugia, used in research, or used for the development of propagation technology that are subsequently listed as endangered or threatened are exempted from this policy. Any propagation program initiated with candidate or proposed species with the intent to produce individuals for release to the wild are not exempted and must comply with this policy.

5. Captive breeding of listed species that are not native to the United States or its territories or possessions, and producing individuals not addressed in an approved recovery plan and not intended for release within the United States or its territories or possessions, is exempt from this policy. However, such activities must comply with any other Federal and State laws, permit needs, or other requirements.

6. The temporary removal and holding of listed individuals, unless such actions intentionally involve reproduction other than for purposes of recovery-related research or as needed to maintain a refugia population is exempted.

7. The short-term holding or captive-rearing of wild-bred individuals obtained for later reintroduction, augmentation, or translocation efforts when controlled propagation does not take place or is not intended during the period of captive maintenance.

8. Actions involving cryopreservation or other methods of conserving biological materials, if not intended for near-term use in controlled propagation or the reintroduction into the wild of listed species, are exempt from this policy. When and if reintroduction to the wild requires the use of these materials, such activities would come under the scope of this policy.

9. Additional exceptions to this policy may be made on a case-by-case basis with the approval of the FWS Director or NMFS Assistant Administrator, as warranted.

Where conflicts may arise between this policy and programs carried out in furtherance of restoration goals or required by treaty, trust resources obligations, or other legal mandate, we will, to the extent practical, make every effort to achieve solutions that are consistent with the requirements of the Act and this policy.

G. *Who are our potential partners?* We recognize the need for partnerships with other Federal agencies, States, Tribes, local governments, and private entities in the recovery of listed species. We will seek to develop partnerships with qualified cooperators for the purpose of propagating listed, proposed, and candidate species (as authorized under sections 6 and 2(a)(5) of the Act). Guidance for this activity is as follows:

1. The FWS Regional Directors or the NMFS Regional Administrators may explore opportunities for accomplishing controlled propagation and any associated research tasks with other Federal cooperators, FWS/NMFS facilities, State agencies, Tribes, zoological parks, aquaria, botanical gardens, academia, and other qualified parties at their discretion. We will select cooperators on the basis of scientific merits; technical capability; willingness to adhere to our policies, guidance, and protocols; and cost-effectiveness.

2. Regional Directors or Regional Administrators, depending on which agency has lead for the species, will be responsible for ensuring appropriate staff oversight of programs conducted by all cooperators to ensure adherence to necessary protocols, guidance, and permit conditions, and to coordinate reporting requirements.

H. *What are the Federal agency responsibilities under this policy?* This policy shall be implemented in accordance with the following guidelines:

1. The Regional Directors and Regional Administrators will ensure compliance with this policy for those species for which they have responsibility.

2. Regional Directors and Regional Administrators are responsible for recovery of listed species under their jurisdiction. Recovery actions for which Regional Directors and Regional Administrators have authority include establishment of refugia, initiation of necessary research or technology development, implementation of controlled propagation programs, and propagation research for listed species. When determining species' priority for inclusion in controlled propagation programs, we will consider the following:

(a) Whether or not a listed species' recovery plan outline, draft recovery plan, or final recovery plan identifies controlled propagation as an appropriate recovery strategy and what

priority this task is assigned within the overall recovery strategy.

(b) The availability and willingness of cooperators to contribute to recovery activities, including cost sharing.

3. In the event that the current recovery plan fails to identify the establishment of refugia, initiation of propagation research, or controlled propagation as recovery tasks as necessary to the recovery of the species, the recovery plan will be updated, amended, or revised as appropriate. Recovery plans not yet finalized will be amended to reflect the changed recovery requirements of the listed species and provide justifications as necessary.

4. Within 6 months of the effective date of this policy, FWS Regional Directors will identify all listed species for which they have the lead recovery responsibility that are (1) being held in refugia; (2) involved in pre-propagation research; and (3) are involved in controlled propagation programs. For species involved in controlled propagation programs, the level of production and the recovery purpose (*e.g.*, augmentation of extant populations, establishment of new populations) will be identified. This information will be reported to the Assistant Director, Endangered Species, in the FWS Washington D.C. Office.

5. Continuation of those programs not in conformity with this policy 12 months following implementation of this policy will require the FWS Director's or NMFS Assistant Administrator's concurrence. The Regional Director and Regional Administrator will provide his or her recommendation to the Director or Assistant Administrator.

I. *Does the policy include annual reporting requirements?* For the FWS, annual reports based on fiscal years will be prepared by the responsible regional authority and submitted to the Director, through the Assistant Director, Endangered Species, not later than October 31st of each year. Reports will contain the following information for each species being maintained in refugia, in pre-propagation research, or under propagation:

- Recovery priority number;
- Policy criteria that are not met (if any);
- A brief description of the controlled propagation program, including objectives and status;
- List of cooperators, if any;
- Expenditures for the past fiscal year;
- Prospects for, or obstacles to, achieving research, controlled propagation, or reintroduction objectives, and,
- A brief description of the status of wild populations, if any.

J. *What authorities support this policy?* The Endangered Species Act of 1973, as amended; Marine Mammal Protection Act of 1972, as amended; Animal Welfare Act; Lacey Act; Fish and Wildlife Act of 1956; and National Environmental Policy Act.

K. *What are the information collection requirements?* The permit application required for participation in the controlled propagation of species listed under the Act is FWS form #3–200–55 Interstate Commerce and Recovery and form #3–200–56 for incidental take. Applicants for NMFS research/enhancement permits or incidental take permits must meet certain criteria in their applications but there are no specific forms. We use these forms or applications to permit recovery actions that may be undertaken for scientific purposes, enhancement of propagation or survival, or for incidental taking. Whenever we ask the public to submit information, we must have authorization from the Office of Management and Budget. As part of the permitting process, we often ask the public to provide information such as filling out permit applications or submitting reports.

Information collection requirements under this policy are included under the Office of Management and Budget collection approval number 1018–0094 (FWS) and 0648–0230 (NMFS), which includes information collection for permits granted for interstate commerce and recovery and incidental take. The expiration date of this approval is February 28, 2001(FWS), and October 31, 2001 (NMFS). The purpose of information collection is to identify performance of permitted tasks and make decisions, according to criteria established in various Federal wildlife and plant conservation statutes and described in 50 CFR 17.22(a)(1) and (3) and 17.32(a)(1) and (3) (FWS) and 50 CFR 222 (NMFS).

We have estimated that the time required by an applicant to complete FWS form 3–200–55 is 2 hours. Applications to NMFS for these permits are estimated to require 80 hours for completion. The information required is already known to the applicant and need only be entered on the application form. Summary information for endangered species permit applications will be published in the **Federal Register** as required by regulation. This notice is provided pursuant to section 10(c) of the Act and NEPA regulations (40 CFR 1506.6). The total burden hours for completing reporting requirements is also estimated at 2 hours for the FWS and 80 hours for NMFS. No costs to applicants beyond the cost of hour burden described above are anticipated. Annual reports are generally required for permits for scientific research.

For organizations, businesses, or individuals operating as a business (*i.e.*, permittee not covered by the Privacy Act), we request that such entities identify any information that should be considered privileged and confidential business information to allow us to meet our responsibilities under the Freedom of Information Act. Confidential business information must be clearly marked ''Business Confidential'' at the top of the first page and each succeeding page, and must be accompanied by a nonconfidential summary of the confidential information. Documents may be made available to the public under Department of the Interior Freedom of Information Act (FOIA) regulations in 43 CFR 2.13(c)(4), 43 CFR 2.15(d)(1)(I) and Department of Commerce 15 CFR 4. Documents and other information submitted with these applications are made available for public review, subject to the requirements of the Privacy Act and FOIA, by any party who submits a written request for a copy of such documents to the appropriate Service within 30 days of the date of publication of the notice.

Signed: August 4, 2000.

Jamie Rappaport Clark,

Director, U.S. Fish and Wildlife Service, Department of the Interior.

Dated: August 18, 2000.

Penelope D. Dalton,

Assistant Administrator for Fisheries, National Marine Fisheries Service.

[FR Doc. 00–23957 Filed 9–19–00; 8:45 am]

BILLING CODE 4310–55–P

DEPARTMENT OF THE INTERIOR

Bureau of Land Management

[NM–020–1040–HV; NMNM–102554]

A Direct Sale of Public Land to Richard Montoya of Santa Fe, NM

AGENCY: Bureau of Land Management (BLM), Interior.

ACTION: Notice of realty action.

SUMMARY: The following public land has been found suitable for direct sale under Section 203 of the Federal Land Policy and Management Act of 1976 (90 Stat. 2750, 43 U.S.C. 1713) and at no less than the estimated fair market value. The land will not be offered for sale until at least 60 days after the date of this notice.

New Mexico Principal Meridian

T. 17 N., R. 9 E.,
Section 33, lot 37

The subject public land containing 0.38 acres, more or less will be sold to Richard Montoya, of Santa Fe, NM. The sale is being done to comply with Mr. Montoya's color-of-title case. The proposed sale is for surface rights only. The disposal is consistent with the Taos Resource Area Management Plan dated October 1988, state and local government programs, plans, and applicable regulations.

EFFECTIVE DATE: Interested parties may submit comments on the direct sale on or before November 6, 2000.

ADDRESSES: Comments should be sent to the Taos Field Office Manager, BLM, 226 Cruz Alta Road, Taos, NM 87571.

FOR FURTHER INFORMATION CONTACT: Hal Knox, BLM, New Mexico State Office, P.O. Box 27115 or at (505) 438–7402.

SUPPLEMENTARY INFORMATION: The direct sale will contain the following reservations:

1. Excepting to the United States a right-of-way thereon for ditches or canals constructed by the authority of the United States in accordance with the Act of August 30, 1890 (43 U.S.C. 945).

2. All minerals shall be reserved to the United States, together with the right to prospect for, mine, and remove the minerals. A more detailed description of this reservation, which will be incorporated in the patent document or other document of conveyance is available for review at the BLM office.

The land will be conveyed subject to:

1. Valid existing rights-of-way and easements. Publication of this notice in the **Federal Register** will segregate the public land from appropriations under the public land laws including the mining laws but not the mineral leasing laws.

This segregation will terminate upon the issuance of a patent or other document of conveyance, 270 days from date of publication of this notice in the **Federal Register** or upon publication of Notice of Termination, which ever occurs first.

Any adverse comments will be evaluated by the State Director who may sustain, vacate, or modify this realty action. In the absence of any objections, this realty action will become the final determination of the Department of the Interior.

Dated: September 7, 2000.

Ron Huntsinger,

Taos Field Manager.

[FR Doc. 00–24139 Filed 9–19–00; 8:45 am]

BILLING CODE 4310–AG–P

DEPARTMENT OF THE INTERIOR

National Park Service

Notice of Availability of an Environmental Assessment

AGENCY: National Park Service, Department of the Interior.

ACTION: Notice of Availability of an Environmental Assessment to Install Fire Suppression Systems for 50 Historic Structures at Gettysburg National Military Park, Adams County, Pennsylvania.

SUMMARY: Pursuant to the Council on Environmental Quality regulations and National Park Service policy, the NPS announces the availability of a draft environmental assessment for the Installation of Fire Suppression Systems for 50 Historic Structures at Gettysburg National Military Park. The purpose of this environmental assessment is to present the alternatives for installation of fire suppression systems in 50 historic structures and related impacts. The NPS is soliciting comments on this environmental assessment. NPS will consider these comments in making a decision pursuant to the National Environmental Policy Act (NEPA) and the National Historic Preservation Act of 1966 (NHPA).

DATES: The environmental assessment will remain available for public comment through October 10, 2000.

FOR FURTHER INFORMATION CONTACT: Katie Lawhon, (717) 334–1124, extension 452 or write to Superintendent, Gettysburg National Military Park, 97 Taneytown Road, Gettysburg, Pennsylvania 17325.

SUPPLEMENTARY INFORMATION: The National Park Service proposes to install fire suppression systems for 50 historic structures at Gettysburg National Military Park in Adams County, Pennsylvania. The lack of adequate fire protection places these 50 historic structures at risk. Current uses of the buildings include interpretive exhibits for visitors, park office space, storage, employee or rental housing and agricultural functions. Without fire detection and suppression systems neither the long-term preservation of these historic structures nor the safety of the visitors, employees and residents who use these buildings can be ensured.

Alternatives analyzed in the draft Environmental Assessment include Alternative 1, No Action and Alternate 2 (the Proposal). Under Alternative 1, No Action, fire detection and fire suppression equipment would not be installed in the 50 historic structures under consideration. Under Alternative 2, remote fire detection and suppression systems with storage tanks, pumps, and warning devices would be installed in each of the 50 historic structures.

Dated: September 11, 2000.

Russell A. Thompson,

Acting Superintendent, Gettysburg National Military Park.

[FR Doc. 00–24077 Filed 9–19–00; 8:45 am]

BILLING CODE 4310–70–P

DEPARTMENT OF THE INTERIOR

National Park Service

Going-to-the-Sun Road Advisory Committee; Meeting

AGENCY: National Park Service, Interior.

ACTION: Notice of Meeting for the Going-to-the-Sun Road Advisory Committee.

SUMMARY: This notice announces a scheduled meeting of the Going-to-the-Sun Road Advisory Committee. Notice of this meeting is required under the Federal Advisory Committee Act (P.L. 92–463).

MEETING DATE AND TIME: Monday, September 25, 2000 (8 a.m. to 12 noon and 1 p.m. to 6 p.m.); and Tuesday, September 26, 2000 (8 a.m. to 12 noon and 1 p.m. to 5 p.m.).

MEETING LOCATION: Community Building, Headquarters, Glacier National Park, West Glacier, Montana 59936, 406–888–7897.

AGENDA: During the morning of September 25 the Going-to-the-Sun Road Advisory Committee will have a field reconnaissance on the Going-to-the-Sun Road (GTSR). In the afternoon the committee will hear and discuss MK Centennials preliminary findings and recommendations on the Engineering Study, Socioeconomic Analysis, Cultural Landscape Report, and the Transportation/Visitor Use Study. The meeting will then open for Public Comment at 5:00 p.m. On September 26 the Advisory Committee will discuss and refine MK Centennials preliminary Conceptual Engineering alternatives for the rehabilitation of the GTSR. Discussion of the Public Involvement Strategy and an Advisory Committee Business Meeting will occur in the afternoon. The meeting will then be open for Public Comment at noon and at 3:30 p.m.

The Committee meeting will be open to the public. Space and facilities to accommodate the public are limited and attendees will be accommodated on a first-come basis. Anyone may file with the Committee a written statement concerning matters to be discussed. The Committee may also permit attendees to

address the Committee, but may restrict the length of presentations, as necessary to allow the Committee to complete its agenda within the allotted time.

Anyone who wishes further information concerning the meeting, or who wishes to submit a written statement, may contact Dayna Hudson, Office of the Superintendent, Glacier National Park, P.O. Box 128, West Glacier, Montana 59936 (telephone 406–888–7972).

Draft minutes of the meeting will be available for public information 30 days after the meeting in the Project Manager's Office, Park Headquarters, Glacier National Park, West Glacier, Montana.

John Crowley,

Acting Director, Intermountain Region.

[FR Doc. 00–24078 Filed 9–19–00; 8:45 am]

BILLING CODE 4310–70–P

DEPARTMENT OF THE INTERIOR

National Park Service

Notice of Inventory Completion for Native American Human Remains and Associated Funerary Objects in the Possession of the American Museum of Natural History, New York, NY

AGENCY: National Park Service, Interior.

ACTION: Notice.

Notice is hereby given in accordance with provisions of the Native American Graves Protection and Repatriation Act (NAGPRA), 43 CFR 10.9, of the completion of an inventory of human remains and associated funerary objects in the possession of the American Museum of Natural History, New York, NY.

This notice is published as part of the National Park Service's administrative responsibilities under NAGPRA, 43 CFR 10.2 (c). The determinations within this notice are the sole responsibility of the museum, institution, or Federal agency that has control of these Native American human remains and associated funerary objects. The National Park Service is not responsible for the determinations within this notice.

A detailed assessment of the human remains was made by American Museum of Natural History professional staff in consultation with representatives of the Muckleshoot Indian Tribe of the Muckleshoot Reservation, Washington; and the Suquamish Indian Tribe of the Port Madison Reservation, Washington.

At an unknown date, human remains representing a minimum of one individual were collected by an unknown individual from Alki Point, Seattle, King County, WA. Also at an unknown date, these human remains came into the possession of the American Museum of Natural History and may never have been accessioned into the collections. No known individual was identified. No associated funerary objects are present.

Based on the assigned culture name, ''Salish'', and the geographic location where these human remains were found, this individual has been identified as Native American. These human remains derive from the post-contact territory of the Muckleshoot Indian Tribe of the Muckleshoot Reservation, Washington; and the Suquamish Indian Tribe of the Port Madison Reservation, Washington. Based on geographical evidence and on archeological expert opinion, these human remains are most likely culturally affiliated with the Muckleshoot Indian Tribe of the Muckleshoot Reservation, Washington; and the Suquamish Indian Tribe of the Port Madison Reservation, Washington.

Based on the above-mentioned information, officials of the American Museum of Natural History have determined that, pursuant to 43 CFR 10.2 (d)(1), the human remains listed above represent the physical remains of a minimum of one individual of Native American ancestry. Officials of the American Museum of Natural History also have determined that, pursuant to 43 CFR 10.2 (e), there is a relationship of shared group identity that can be reasonably traced between these Native American human remains and the Muckleshoot Indian Tribe of the Muckleshoot Reservation, Washington; and the Suquamish Indian Tribe of the Port Madison Reservation, Washington. This notice has been sent to officials of the Muckleshoot Indian Tribe of the Muckleshoot Reservation, Washington; and the Suquamish Indian Tribe of the Port Madison Reservation, Washington. Representatives of any other Indian tribe that believes itself to be culturally affiliated with these human remains should contact Martha Graham, Director of Cultural Resources, American Museum of Natural History, Central Park West at 79th Street, New York, NY 10024–5192, telephone (212) 769–5846, before October 20, 2000. Repatriation of the human remains to the Muckleshoot Indian Tribe of the Muckleshoot Reservation, Washington; and the Suquamish Indian Tribe of the Port Madison Reservation, Washington may begin after that date if no additional claimants come forward.

Dated: September 14, 2000.

John Robbins,

Assistant Director, Cultural Resources Stewardship and Partnerships.

[FR Doc. 00–24126 Filed 9–19–00; 8:45 am]

BILLING CODE 4310–70–F

DEPARTMENT OF JUSTICE

Notice of Lodging of Consent Decree Pursuant to the Comprehensive Environmental Response, Compensation, and Liability Act

In accordance with Department policy, the Department of Justice gives notice that a proposed partial consent decree in the consolidated cases captioned *United States* v. *Cantrell, et al.,* Civil Action No. C–1–97–981 (S.D. Ohio) and *United States* v. *Ohio Power Co., et al.,* Civil Action No. C–1–98–247 (S.D. Ohio) was lodged with the United States District Court for the Southern District of Ohio, Western Division, on September 1, 2000, pertaining to the Automatic Containers Superfund Site (the ''Site''), located near Ironton, in Lawrence County, Ohio. The proposed consent decree would resolve certain civil claims of the United States for recovery of unreimbursed past response costs under section 107 of the Comprehensive Environmental Response, Compensation and Liability Act, as amended (''CERCLA''), 42 U.S.C. 9607, against one defendant, Amcast Industrial Corporation (''Amcast'').

Through seven prior partial consent decrees approved by the Court, the United States settled with 34 first-party and third-party defendants, recovering nearly $960,000 in CERCLA response costs that the United States has to date incurred in connection with the Site. The proposed consent decree, captioned ''Partical Consent Decree with Settling Defendant Amcast Industrial Corporation (f/k/a Dayton Malleable, Inc.),'' would provide for payment of an additional $650,000, which is substantially all of the United States' remaining past response costs for the Site. The proposed Consent Decree also would constitute a declaratory judgment that Amcast is responsible for any future CERCLA response costs associated with the Site.

The Department of Justice will receive, for a period of thirty (30) days from the date of this publication, comments relating to the proposed consent decree. Comments should be addressed to the Assistant Attorney General, Environment and Natural Resources Division, United States Department of Justice, Washington, D.C. 20530, and should refer to *United States*

v. *Cantrell, et al.,* Civil Action No. C–1–97–981 (S.D. Ohio) and *United States* v. *Ohio Power Co., et al.,* Civil Action No C–1–98–247 (S.D. Ohio), and DOJ Reference Nos. 90–11–3–1756 and 90–11–3–1756/1.

The proposed consent decree may be examined at: (1) the Office of the United States Attorney for the Southern District of Ohio, 220 U.S. Courthouse, 100 East Fifth Street, Cincinnati, Ohio 45202 (contact Gerald Kaminski (513–684–3711)); and (2) the United States Environmental Protection Agency (Region 5), 77 West Jackson Boulevard, Chicago, Illinois 60604–3590 (contact Mony Chabria (312–886–6842)). A copy of the proposed consent decree may also be obtained by mail from the Department of Justice Consent Decree Library, P.O. Box 7611, Washington, DC 20044. In requesting copies, please refer to the referenced cases and DOJ Reference Numbers, and enclose a check for $6.50 (26 pages at 25 cents per page reproduction cost), made payable to the Consent Decree Library.

Walker B. Smith,

Deputy Chief, Environmental Enforcement Section, Environment and Natural Resources Division.

[FR Doc. 00–24082 Filed 9–19–00; 8:45 am]

BILLING CODE 4410–15–M

DEPARTMENT OF JUSTICE

Notice of Lodging Consent Decree Under the Safe Drinking Water Act, 42 U.S.C. 300f et. seq.

Notice is hereby given that on August 31, 2000, a proposed Consent Decree (''Decree'') in *United States and State of Arizona* v. *City of Phoenix, Arizona*, CV 001681PHXEHC, was lodged with the United States District Court for the District of Arizona. The United States filed this action pursuant to Section 1414(b) of the Safe Drinking Water Act (''SDWA''), 42 U.S.C. 300g–3(b), seeking injunctive relief and civil penalties for the Defendant's violation of various provisions of the SDWA and of 40 C.F.R. Part 411, the National Primary Drinking Water Regulations. The State of Arizona filed as a co-plaintiff for violations of Arizona statutes and regulations pertaining to drinking water.

The proposed Consent Decree with the City of Phoenix requires Phoenix to pay a civil penalty of $350,000. The decree also sets out specific compliance measures that the City must implement regarding its public drinking water system. The City will also perform two supplemental environmental projects. The City will develop implementation strategies and implement measures to address taste and odor problems in drinking water served to customers by the City. The City will spend $1.26 million on this project. In addition, the City will sample to determine the presence of methyl tertiary butyl ether and ammonium perchlorate in various sources under different environmental conditions. The City will spend $26,240 on this project.

The Department of Justice will receive for a period of thirty (30) days from the date of this publication comments relating to the Decree. Comments should be addressed to the Assistant Attorney General of the Environmental and Natural Resources Division, Department of Justice, 950 Pennsylvania Avenue, NW., Washington, DC 20530, and should refer to *United States and State of Arizona* v. *City of Phoenix, Arizona*, and D.J. Ref. #90–5–1–1–4437.

The Decree may be examined at the U.S. EPA Region IX, 75 Hawthorne Street, San Francisco, California, 94015, and at the U.S. Attorney's Office, at United States Courthouse, 230 First Avenue, Phoenix, Arizona 85025. Copies of the decree may be obtained by mail from the Consent Decree Library, Department of Justice, P.O. Box 7611, Washington, DC 20044–7611. In requesting a copy, please enclose a check in the amount of $7.50 (25 cents per page reproductions cost) payable to the Consent Decree Library.

Walker B. Smith,

Deputy Section Chief, Environmental Enforcement Section, Environmental and Natural Resources Division.

[FR Doc. 00–24083 Filed 9–19–00; 8:45 am]

BILLING CODE 4410–15–M

DEPARTMENT OF JUSTICE

Notice of Lodging of Consent Decree Pursuant to the Comprehensive Environmental Response, Compensation and Liability Act

In accordance with Departmental policy, 28 CFR 50.7, 38 FR 19029, and 42 U.S.C. 9622(d), notice is hereby given that on August 30, 2000, a proposed consent decree in *United States* versus *Burton Shaffer, et al.,* Civil Action No. 95–10023MLW, was lodged with the United States District Court for the District of Massachusetts. The proposed consent decree resolves certain claims under sections 106 and 107 of the Comprehensive Environmental Response, Compensation, and Liability Act (''CERCLA''), 42 U.S.C. 9606 and 9607, regarding the release and/or threat of release of hazardous substances at and from the Shaffer Landfill Operable Unit of the Iron Horse Park Superfund Site in Billerica, Massachusetts. The settlers are owners/operators, generators and transporters involved with the disposal of hazardous substances at the Shaffer Landfill.

Pursuant to the proposed settlement, the performing settling defendants shall reimburse the United States for certain past response costs; pay future oversight costs; construct the Record of Decision for the Shaffer Landfill Operable Unit; implement operation and maintenance for 40 years; and perform certain groundwater monitoring. A group of cashout settling defendants shall collectively pay a total of $627,234.40 to the United States, the Commonwealth of Massachusetts and the performing settling defendants. The cashout amount is based on the limited financial resources of these parties.

The Department of Justice will receive for a period of thirty (30) days from the date of this publication comments relating to the proposed consent decree. Comments should be addressed to the Assistant Attorney General of the Environment and Natural Resources Division, Department of Justice, P.O. Box 7611, Benjamin Franklin Station, Washington, DC 20044, and should refer to *United States* versus *Burton Shaffer, et al.,* Civil Action No. 95–10023MLW, D.J. Ref. 90–11–3–90C.

The proposed consent decree may be examined at either of the following locations: (1) the Boston Office of the United States Attorney, District of Massachusetts; or (2) Region I, Office of the Environmental Protection Agency, One Congress Street, Boston, Massachusetts. A copy of the consent decree can be obtained by mail (without attachments) from the Department of Justice Consent Decree Library, P.O. Box 7611, Washington, DC 20044. In requesting a copy of the consent decree (without attachments), please enclose a check in the amount of $50.00 (25 cents per page reproduction cost) payable to the Consent Decree Library.

Bruce Gelber,

Deputy Chief, Environmental Enforcement Section, Environment and Natural Resources Division.

[FR Doc. 00–24081 Filed 9–19–00; 8:45 am]

BILLING CODE 4410–15–M

DEPARTMENT OF JUSTICE

Notice of Lodging of Consent Decree Pursuant to the Comprehensive Environmental Response, Compensation, and Liability Act

Notice is hereby given that a consent decree in *United States* v. *Warehouse 81 Limited Partnership, et al.*, Civil Action

No. 4:00–CV–1549 (M.D. Pa.) was lodged with the court on August 30, 2000.

The proposed decree resolves claims of the United States against Warehouse 81 Limited Partnership and Michael Sabia under sections 106 and 107 of the Comprehensive Environmental Response, Compensation and Liability Act, as amended (''CERCLA''), 42 U.S.C. 9606 and 9607, for response costs and actions at the MW Manufacturing Superfund Site in Valley Township, Montour County, PA. The decree requires the defendants to reimburse the United States $31,000 in response costs and to implement specified response actions selected by EPA for the Site.

The Department of Justice will receive, for a period of thirty (30) days from the date of this publication, comments relating to the proposed consent decree. Comments should be addressed to the Assistant Attorney General for the Environment and Natural Resources Division, Department of Justice, Washington, DC 20530, and should refer to *United States* v. *Warehouse 81 Limited Partnership,* Civil Action No. 4:00–CV–1549 (M.D. Pa.), DOJ Ref. #90–11–3–06793.

The proposed consent decree may be examined and copies at the Office of the United States Attorney, Room 1162, Federal Building, 228 Walnut Street, Harrisburg, PA 17108; or at the Region III Office of the Environmental Protection Agency, c/o Thomas Cinti, Assistant Regional Counsel, 1650 Arch Street, Philadelphia, PA 19103. A copy of the proposed consent decree may be obtained by mail from the Consent Decree Library, P.O. Box No. 7611, Washington, DC 20044. In requesting a copy, please refer to the referenced case and enclose a check in the amount of $9.00 (25 cents per page reproduction costs), payable to the Consent Decree Library.

Walker Smith,

Deputy Chief, Environmental Enforcement Section, Environment and Natural Resources Division.

[FR Doc. 00–24084 Filed 9–19–00; 8:45 am]

BILLING CODE 4410–15–M

DEPARTMENT OF JUSTICE

Antitrust Division

United States v. SBC Communications Inc. et al; Proposed Final Judgment and Competitive Impact Statement

Notice is hereby given pursuant to the Antitrust Procedures and Penalties Act, 15 U.S.C. Section 16(b) through (h), that a proposed Final Judgment has been filed with the United States District Court for the District of Columbia in *United States of America* v. *SBVC Communications Inc. et al.,* 1:00CV02073 (PLF). On August 30, 2000, the United States filed a Complaint alleging that the proposed joint venture between SBC Communications and BellSouth Corporation would lessen competition in the markets for wireless mobile telephone services in 16 geographic markets in violation of Section 7 of the Clayton Act, 15 U.S.C. 18. The proposed Final Judgment, filed at the same time as the Complaint, requires defendants to divest one of their two wireless telephone businesses in each market where these businesses overlap geographically. Copies of the Complaint, proposed Final Judgment and Competitive Impact Statement are available for inspection at the Department of Justice in Washington, DC in Room 200, 325 Seventh Street, NW., and at the Office of the Clerk of the United States District Court for the District of Columbia.

Public comment is invited within 60 days of the date of this notice. Such comments, and responses thereto, will be published in the **Federal Register** and filed with the Court. Comments should be directed to Donald J. Russell, Chief, Telecommunications Task Force, Antitrust Division, Department of Justice, 1401 H. Street, NW., Room 8000, Washington, DC 20530 (Telephone: (202) 514–5621).

Constance K. Robinson,

Director of Operations and Merger Enforcement.

Stipulation

It is stipulated by and between the undersigned parties, by their respective attorneys, as follows:

(1) The Court has jurisdiction over the subject matter of this action and over each of the parties hereto, and venue of this action is proper in this Court.

(2) The parties stipulate that a Final Judgment in the form hereto attached may be filed and entered by the Court, upon the motion of any party or upon the Court's own motion, at any time after compliance with the requirements of the Antitrust Procedures and Penalties Act, 15 U.S.C. 16, and without further notice to any party or other proceedings, provided that plaintiff has not withdrawn its consent, which it may do at any time before entry of the proposed Final Judgment by serving notice thereof on defendants and by filing that notice with the Court.

(3) Defendants shall abide by and comply with the provisions of the proposed Final Judgment pending entry of the Final Judgment by the Court, or until expiration of time for all appeals of any Court ruling declining entry of the proposed Final Judgment, and shall, from the date of the signing of this Stipulation, comply with all the terms and provisions of the proposed Final Judgment as through the same were in full force and effect as an order of the Court.

(4) This Stipulation shall apply with equal force and effect to any amended proposed Final Judgment agreed upon in writing by the parties and submitted to the Court.

(5) In the event plaintiff withdraws its consent, Final Judgment pursuant to this Stipulation, the time has expired for all appeals of any Court ruling declining entry of the proposed Final Judgment, and the Court has not otherwise ordered continued compliance with the terms and provisions of the proposed Final Judgment, then the parties are released from all further obligations under this Stipulation, and the making of this Stipulation shall be without prejudice to any party in this or any other proceeding.

(6) Defendants represent that the divestiture ordered in the proposed Final Judgment can and will be made, and that defendants will later raise no claims of hardship or difficulty as grounds for asking the Court to modify any of the divestiture provisions contained therein.

Dated: August 30, 2000.

For Plaintiff United States of America

Joel I. Klein,
Assistant Attorney General.
A. Douglas Melamed,
Principal Deputy Assistant Attorney General.
Constance K. Robinson,
Director of Operations and Merger Enforcement.
Donald J. Russell,
Chief, Telecommunications Task Force.
Laury Bobbish,
Assistant Chief, Telecommunications Task Force.
Hillary B. Burchuk, D.C. Bar No. 366755,
Lawrence M. Frankel, D.C. Bar No. 441532,
Cynthia R. Lewis,
Attorneys, Telecommunications Task Force, U.S. Department of Justice, Antitrust Division, 1401 H. Street, N.W., Suite 8000, Washington, D.C. 20530, (202) 514–5621.

Date Signed: August 28, 2000.

For SBC Communications Inc.

Wm. Randolph Smith, D.C. Bar No. 356402,
Crowell & Moring LLP, 1001 Pennsylvania Avenue, N.W., Washington, D.C. 20004, (202) 624–2500.

Date Signed: August 25, 2000.

For BellSouth Corporation

Bernard A. Nigro, Jr., D.C. Bar No. 412357,
Fried, Frank, Harriss, Shriver & Jacobson, 1001 Pennsylvania Avenue, N.W., Suite

800, Washington, D.C. 20004, (202) 639–7159.

Date Signed: August 25, 2000.

Final Judgment

Whereas, plaintiff United States of America, filed its Complaint on August 30, 2000;

And Whereas, plaintiff and defendants, by their respective attorneys, have consented to the entry of this Final Judgment without trial or adjudication on any issue of fact or law;

And Whereas, entry of this Final Judgment does not constitute any evidence against or any admission by any party with respect to any issue of law or fact;

And Whereas, defendants have further consented to be bound by the provisions of the Final Judgment pending its approval by the Court;

And Whereas, plaintiff believes that entry of this Final Judgment is necessary to protect competition in markets for mobile wireless telecommunications services in California, Indiana, and Louisiana;

And Whereas, the essence of this Final Judgment is prompt and certain divestiture of certain wireless businesses that would otherwise be commonly owned and controlled, including their licenses and all relevant assets of the wireless businesses, and the imposition of related injunctive relief to ensure that competition is not substantially lessened;

And Whereas, plaintiff requires that defendants make certain diverstitures of such licenses and assets for the purpose of ensuring that competition is not substantially lessened in any relevant market for mobile wireless telecommunications services in California, Indiana, and Louisiana;

And Whereas, defendants have represented to plaintiff that the divestitures ordered herein can and will be made and that defendants will not raise any claims of hardship or difficulty as grounds for asking the Court to modify any of the divestiture provisions contained herein below;

Therefore, before the taking of any testimony, and without trial or adjudication of any issue of fact or law herein, and upon consent of the parties hereto, it is hereby *Ordered, Adjudged and Decreed:*

I

Jurisdiction

This Court has jurisdiction over the subject matter of this action and of each of the parties consenting to this Final Judgment. The Complaint states a claim upon which relief may be granted against defendants under Section 7 of the Clayton Act, 15 U.S.C. 18, as amended.

II

Definitions

A. ''SBC'' means SBC Communications Inc., a corporation with its headquarters in San Antonio, Texas, its successors and assigns, and its subsidiaries, divisions, groups, affiliates, partnerships and joint ventures, and their directors, officers, managers, agents and employees.

B. ''BellSouth'' means BellSouth Corporation, a corporation with its headquarters in Atlanta, Georgia, its successors and assigns, and its subsidiaries, divisions, groups, affiliates, partnerships and joint ventures, and their directors, officers, managers, agents and employees.

C. ''Wireless System Assets'' means, for each wireless business to be divested under this Final Judgment, all types of assets, tangible and intangible, used by defendants in the operation of each of the wireless businesses to be divested (including the provision of long distance telecommunications services for wireless calls; however, paging services are not included in the definition of Wireless System Assets). ''Wireless System Assets'' shall be construed broadly to accomplish the complete divestiture of the entire business of one of the two wireless businesses in each of the Overlapping Wireless Markets required by this Final Judgment and to ensure that the divested wireless businesses remain viable, ongoing businesses. With respect to each overlap in the Overlapping Wireless Markets, the Wireless System Assets to be divested shall be either those in which BellSouth has an interest or in which SBC has an interest, but not both. The divestitures of the Wireless System Assets as defined in this Section II.C shall be accomplished by: (i) transferring to the purchaser the complete ownership and/or other rights to the assets (other than those assets used substantially in the operations of either defendant's overall wireless business that must be retained to continue the existing operations of the wireless properties defendants are not required to divest, and that either are not capable of being divided between he divested wireless businesses and those that are not divested or are assets that the divesting defendant and the purchaser(s) agree shall not be divided); and (ii) granting to the purchaser(s) an option to obtain a non-exclusive, transferable license from defendants for a reasonable period at the election of the purchaser to use any of the divesting defendant's assets used in the operation of the wireless business being divested, so as to enable the purchaser to continue to operate the divested wireless businesses without impairment, where those assets are not subject to complete transfer to the purchaser under (i). Assets shall include, without limitation, all types of real and personal property, monies and financial instruments, equipment, inventory, office furniture, fixed assets and furnishings, supplies and materials, contracts, agreements, leases, commitments, spectrum licenses issued by the Federal Communications Commission(''FCC'') and all other licenses, permits and authorizations, operational support systems, customer support and billing systems, interfaces with other service providers, business and customer records and information, customer lists, credit records, accounts, and historic and current business plans, as well as any patents, licenses, sub-licenses, trade secrets, know-how, drawings, blueprints, designs, technical and quality specifications and protocols, quality assurance and control procedures, manuals and other technical information defendants supply to their own employees, customers, suppliers, agents, or licensees, and trademarks, trade names and service marks (except for trademarks, trade names and service marks containing ''SBC,'' ''Southwestern Bell,'' ''Pacific Bell,'' ''Ameritech,'' ''Cellular One,'' ''1–800–Mobile–1,'' ''ClearPath,'' ''Pick-Up and Go,'' ''BellSouth,'' ''Bell,'' the Bell Symbol, or ''Mobile Memo'') or other intellectual property, including all intellectual property rights under third party licenses that are capable of being transferred to a purchaser either in their entirety, for assets described above under (i), or through a license obtained through or from the divesting defendant, for assets described above under (ii). Notwithstanding the foregoing, in the Indianapolis MTA Overlapping Wireless Market, as defined below, the divesting defendant shall not be required to divest those assets used solely to provide wireless service on a resale basis and contracts with customers served on a resale basis. Defendants shall identify in a schedule submitted to plaintiff and filed with the Court, as expeditiously as possible following the filing of the Complaint in this case and in any event prior to any divestitures and before the approval by the Court of this Final Judgment, any intellectual property rights under third party licenses that are used by the wireless businesses being

divested but that defendants could not transfer to a purchaser entirely or by license without third party consent, and the specific reasons why such consent is necessary and how such consent would be obtained for each asset.

In the event that defendants elect to divest an interest in a PCS business in one of the PCS/Cellular Overlap Areas, defendants may retain up to 10 MHz of broadband PCS spectrum within that PCS/Cellular Overlap Area upon completion of the divestiture of the Wireless System Assets.

D. ''Overlapping Wireless Markets'' means the following Metropolitan Statistical Areas (''MSA''), Major Trading Areas (''MTA''), and Rural Service Areas (''RSA''), used to define cellular and PCS license areas by the FCC, in which BellSouth and SBC each hold ownership interests in one of the wireless licenses issued by the FCC as of the date of the filing of the Complaint in this action:

I. Cellular Overlap Areas
  A. Baton Rouge MSA
  B. New Orleans MSA
  C. Louisiana 6 RSA—Iberville
  D. Louisiana 8 RSA—St. James
  E. Louisiana 9 RSA—Plaquemines
II. PCS/Cellular Overlap Areas
  A. Los Angeles-San Diego MTA
  1. Los Angeles MSA
  B. Indianapolis MTA
  1. Anderson MSA
  2. Bloomington MSA
  3. Indianapolis MSA
  4. Lafayette MSA
  5. Muncie MSA
  6. Terre Haute MSA
  7. Indiana 5 RSA—Warren
  8. Indiana 7 RSA—Owen
  9. Indiana 8 RSA—Brown
  10. Indiana 9 RSA—Decatur

E. ''SBC/BellSouth Wireless Joint Venture'' means the joint venture between SBC and BellSouth, as detailed in the Contribution and Formation Agreement between SBC and BellSouth dated as of April 4, 2000, for which defendants have filed a notification pursuant to the Hart-Scott-Rodino Antitrust Improvements Act on May 8, 2000.

III

Applicability and Effect

A. The provisions of this Final Judgment shall be applicable to each of the defendants, as defined above, and to all other persons in active concert or participation with any of them who shall have received actual notice of this Final Judgment by personal service or otherwise.

B. Defendants shall require, as a condition of the sale or other disposition to an Interim Party, which shall be defined to mean any person other than a purchaser approved by plaintiff pursuant to Section IV.C, of all or substantially all of their assets, or of a lesser business unit containing the Wireless System Assets required to be divested by this Final Judgment, that the Interim Party agrees to be bound by the provisions of this Final Judgment, and shall also require that any purchaser of the Wireless System Assets agree to be bound by Section X of this Final Judgment.

IV

Divestiture of Wireless System Assets

A. Defendants BellSouth and SBC shall divest themselves of the Wireless System Assets of one of the two wireless businesses in each of the Overlapping Wireless Markets, including both any direct or indirect financial ownership interests and any direct or indirect role in management or participation in control, to a purchaser or purchasers acceptable to plaintiff in its sole discretion, or to a trustee designated pursuant to Section V of this Final Judgment in accordance with the following schedule:

1. The divestitures of the Wireless System Assets for each Cellular Overlap Area and the Indianapolis MTA PCS/Cellular Overlap Area shall occur prior to or at the same time as consummation of the transaction that gives rise to the overlap.

2. The divestiture of the Wireless System Assets for the Los Angeles-San Diego MTA PCS/Cellular Overlap Area shall occur prior to or at the same time as consummation of the transaction that gives rise to the overlap, or by January 27, 2001, whichever is later.

3. For the Wireless Overlap Markets defined in Section II.D.II, plaintiff may, in its sole discretion, extend the date by which the divestitures must occur by up to two thirty-day periods.

If the divestitures in the Overlapping Wireless Markets have not been completed as of the date of the consummation of the transaction that gives rise to the overlap, then on or before the date of the consummation of the transaction that gives rise to the overlap, defendants will submit to plaintiff a definitive Divestiture List identifying the specific Wireless System Assets to be divested; provided, however, that the identification of the specific Wireless System Assets to be divested in the Los Angeles-San Diego MTA PCS/Cellular Overlap Area is not required before December 18, 2000.

B. Defendants agree to use their best efforts to accomplish the divestitures set forth in this Final Judgment (i) as expeditiously as possible, including obtaining all necessary regulatory approvals, and (ii) except for the Los Angeles-San Diego MTA PCS/Cellular Overlap Area, to a purchaser or purchasers at or before consummation of the transaction that gives rise to the overlap. The divestitures carried out under the terms of this decree also shall be conducted in compliance with the applicable rules of the FCC, including 47 CFR 20.6 (spectrum aggregation) and 47 CFR 22.942 (cellular cross-ownership) or any waiver of such rules or other authorizations granted by the FCC. Authorization by the FCC to conduct divestiture of a wireless business in a particular manner will not modify any of the requirements of this Final Judgment.

C. Unless plaintiff otherwise consents in writing, the divestitures pursuant to Section IV, or by trustee appointed pursuant to Section V of the Final Judgment, shall be accomplished by (1) divesting all of the Wireless System Assets in any individual Overlapping Wireless Market entirely to a single purchaser (but Wireless System Assets in different Overlapping Wireless Markets may be divested to different purchasers), and (2) selling or otherwise conveying the Wireless System Assets to the purchaser(s) in such a way as to satisfy plaintiff, in its sole discretion, that each wireless business can and will be used by the purchaser(s) as part of a viable, ongoing business engaged in the provision of wireless mobile telephone service. The divestitures pursuant to this Final Judgment shall be made to one or more purchasers for whom it is demonstrated to plaintiff's sole satisfaction that (1) the purchaser has the capability and intent to compete effectively in the provision of wireless mobile telephone service using the Wireless System Assets, (2) the purchaser has the managerial, operational and financial capability to compete effectively in the provisions of wireless mobile telephone service using the Wireless System Assets, and (3) none of the terms of any agreement between the purchaser and either of the defendants shall give defendants the ability unreasonably (i) to raise the purchaser's costs, (ii) to lower the purchaser's efficiency, (iii) to limit any line of business which a purchaser may choose to pursue using the Wireless System Assets (including, but not limited to, entry into local telecommunications services on a resale or facilities basis or long distance telecommunications services on a resale or facilities basis), or otherwise to

interfere with the ability of the purchaser to compete effectively.

D. If they have not already done so, defendants shall make known the availability of the Wireless System Assets in each of the Overlapping Wireless Markets by usual and customary means, sufficiently in advance of the time of consummation of the transaction that gives rise to the overlap to enable the required divestitures to be carried out at or before the consummation of the transaction that gives rise to the overlap. Defendants shall inform any person making an inquiry regarding a possible purchase of the Wireless System Assets that the sale is being made pursuant to the requirements of this Final Judgment, as well as the rules of the FCC, and shall provide such person with a copy of the Final Judgment. With respect to the Wireless System Assets in the Los Angeles-San Diego MTA PCS/Cellular Overlap Area, the requirements of this Section IV.D. shall not be imposed until December 18, 2000.

E. Defendants shall offer to furnish to all prospective purchasers, subject to customary confidentiality assurances, access to personnel, the ability to inspect the Wireless System Assets, and all information and any financial, operational, or other documents customarily provided as part of a due diligence process, including all information relevant to the sale and to the areas of business in which the wireless business has been engaged or has considered entering, except documents subject to attorney-client or work product privileges, or third party intellectual property that defendants are precluded by contract from disclosing and that has been identified in a schedule pursuant to Section II.C. Defendants shall make such information available to plaintiff at the same time that such information is made available to any other person.

F. Except for the Los Angeles MSA, defendants shall provide the purchaser(s) and plaintiff information relating to the personnel whose principal responsibility relates to the Wireless System Assets to enable the purchaser(s) to make offers of employment.

G. Defendants shall not interfere with any negotiations by any purchaser to employ any employees who work or have worked since April 4, 2000 (other than solely on a temporary assignment basis from another part of BellSouth or SBC) with, or whose principal responsibility relates to, the divested Wireless System Assets.

H. To the extent that the wireless businesses to be divested use intellectual property, as required to be identified by Section II.C, that cannot be transferred or assigned without the consent of the licensor or other third parties, defendants shall cooperate with the purchaser(s) and trustee to seek to obtain these consents.

I. Except for the Los Angeles MSA, defendants shall warrant to all purchasers of the Wireless System Assets that the Wireless System Assets will be operational on the date of sale.

V

Appointment of Trustee

A. If defendants have not divested all of the Wireless System Assets in accordance with Section IV, then:

1. Defendants shall identify to plaintiff in writing the remaining Wireless System Assets to be divested in the Overlapping Wireless Markets, and this written notification also shall be provided to the trustee promptly upon his or her appointment by the Court;

2. The Court shall, on application of plaintiff, appoint a trustee selected by plaintiff, who will be responsible for (a) accomplishing a divestiture of all Wireless System Assets transferred to the trustee from defendants, in accordance with the terms of this Final Judgment, to a purchaser or purchasers approved by plaintiff under Section IV.C, and (b) exercising the responsibilities of the licensee and controlling and operating the transferred Wireless System Assets, to ensure that the wireless businesses remain ongoing, economically viable competitors in the provision of mobile wireless telecommunications services in the Overlapping Wireless Markets, until they are divested to a purchaser or purchasers, and the trustee shall agree to be bound by this Final Judgment;

3. Defendants shall submit a form of trust agreement (''Trust Agreement'') to plaintiff, which must be consistent with the terms of this Final Judgment and which must have received approval by plaintiff, who shall communicate to defendants within ten (10) business days approval or disapproval of that form; and

4. After obtaining any necessary approvals from the FCC for the transfer of control of the licenses of the remaining Wireless System Assets to the trustee, defendants shall irrevocably divest the remaining Wireless System Assets to the trustee, who will own such assets (or own the stock or other ownership interest of the entity owning such assets, if divestiture is to be effected by the creation of such an entity for sale to purchaser(s)) and control such assets, subject to the terms of the approved Trust Agreement.

B. After the appointment of a trustee becomes effective, only the trustee shall have the right to sell the Wireless System Assets, which shall be done within the time periods set forth in this Final Judgment. In addition, notwithstanding any provision to the contrary, plaintiff may, in its sole discretion, require the divesting defendant to include any additional PCS spectrum it would propose to retain under Section II.C in the Wireless System Assets to be divested if it would facilitate the prompt divestiture to an acceptable purchaser. The trustee shall have the power and authority to accomplish the divestiture to a purchaser acceptable to plaintiff at such price and at such terms as are then obtainable upon reasonable effort by the trustee, subject to the provisions of Sections IV, V, and VI of this Final Judgment, and shall have such other powers as this Court deems appropriate. Subject to Section V.C of this Final Judgment, the trustee shall have the power and authority to hire at the cost and expense of defendants any investment bankers, attorneys, or other agents reasonably necessary in the judgment of the trustee to assist in the divestiture and in the management of the Wireless System Assets transferred to the trustee, and such professionals and agents shall be accountable solely to the trustee.

C. Defendants shall not object to a sale by the trustee on any grounds other than the trustee's malfeasance. Any such objections by defendants must be conveyed in writing to plaintiff and the trustee within ten (10) days after the trustee has provided the notice required under Section VI of this Final Judgment.

D. The trustee shall serve at the cost and expense of defendants, on such terms and conditions as plaintiff approves, and shall account for all monies derived from the sale of the Wireless System Assets sold by the trustee and all costs and expenses so incurred. After approval by the Court of the trustee's accounting, including fees for its services and those of any professionals and agents retained by the trustee, all remaining money shall be paid to defendants and the trust shall then be terminated. The compensation of the trustee and any professionals and agents retained by the trustee shall be reasonable in light of the value of the Wireless System Assets and based on a fee arrangement providing the trustee with an incentive based on the price and terms of the divestiture and the speed with which it is accomplished, but timeliness is paramount.

E. Defendants shall use their best efforts to assist the trustee in accomplishing the required divestiture, including their best efforts to effect all necessary regulatory approvals. The trustee and any consultants, accountants, attorneys, and other persons retained by the trustee shall have full and complete access to the personnel, books, records, and facilities of the Wireless System Assets, and defendants shall develop financial or other information relevant to the Wireless System Assets as the trustee may reasonably request, subject to reasonable protection for trade secrets or other confidential research, development, or commercial information. As required and limited by Sections IV.E and F of this Final Judgment, defendants shall permit prospective purchaser(s) of the Wireless System Assets to have reasonable access to personnel and to make such inspection of the Wireless System Assets to be sold and any and all financial, operational, or other documents and other information as may be relevant to the divestiture required by this Final Judgment. Defendants shall take no action to interfere with or to impede the trustee's accomplishment of the divestiture.

F. After its appointment, the trustee shall file monthly reports with the parties and the Court setting forth the trustee's efforts to accomplish the divestiture ordered under this Final Judgment; provided, however, that, to the extent such reports contain information that the trustee deems confidential, such reports shall not be filed in the public docket of the Court. Such reports shall include the name, address, and telephone number of each person who, during the preceding month, made an offer to acquire, expressed an interest in acquiring, entered into negotiations to acquire, or was contacted or made an inquiry about the Wireless System Assets to be sold, and shall describe in detail each contact with any such person. The trustee shall maintain full records of all efforts made to divest the Wireless System Assets.

G. The Trustee shall divest the Wireless System Assets in each of the Overlapping Wireless Markets to a purchaser or purchasers acceptable to plaintiff in its sole discretion, as required in Section IV.C of this Final Judgment, no later than one hundred and eighty (180) calendar days after the Wireless Systems Assets are transferred to a trustee; provided, however, that if applications have been filed with the FCC within the one-hundred-eighty-day period seeking approval to assign or transfer licenses to the purchaser(s) of the Wireless System Assets but approval to assign or transfer licenses to the purchaser(s) of the Wireless System Assets but approval of such applications has not been granted before the end of the one-hundred-eighty-day-period, the period shall be extended with respect to the divestiture of those Wireless System Assets for which final FCC approval has not been granted until five (5) days after such approval is received.

H. If the trustee has not accomplished the divestiture of all of the Wireless System Assets within the time specified in Section V.G of this Final Judgment, the trustee shall file promptly with this Court a report setting forth: (1) the trustee's efforts to accomplish the required divestiture; (2) the reasons, in the trustee's judgment, why the required divestiture has not been accomplished; and (3) the trustee's recommendations. To the extent such reports contain information that the trustee deems confidential, such reports shall not be filed in the public docket of the Court. The trustee shall at the same time furnish such report to plaintiff. The parties shall have the right to be heard and to make additional recommendations consistent with the purpose of this Final Judgment. The Court thereafter shall enter such orders as it deems appropriate in order to carry out the purpose of the Final Judgment, which may, if necessary, include extending the trust and term of the trustee's appointment by a period requested by plaintiff.

I. After defendants transfer the Wireless System Assets to the trustee, and until those Wireless System Assets have been divested to a purchaser or purchasers approved by plaintiff pursuant to Section IV.C or Section V, the trustee shall have sole and complete authority to manage and operate the Wireless System Assets and to exercise the responsibilities of the licensee, and shall not be subject to any control or direction by defendants. Defendants shall not retain any economic interest in the Wireless System Assets transferred to the trustee, apart from the right to receive the proceeds of the sale or other disposition of the Wireless System Assets. The trustee shall operate the wireless business(es) as a separate and independent business entity from SBC or BellSouth, with sole control over operations, marketing and sales. SBC and BellSouth shall not communicate with, or attempt to influence the business decisions of, the trustee concerning the operation and management of the wireless businesses, and shall not communicate with the trustee concerning the divestiture of the Wireless System Assets or take any action to influence, interfere with, or impede the trustee's accomplishment of the divestitures required by this Final Judgment, except that defendants may communicate with the trustee to the extent necessary for defendants to comply with this Final Judgment and to provide the trustee, if requested to do so, with whatever resources or cooperation may be required to complete the divestitures of the Wireless System Assets and to carryout the requirements of this Final Judgment. In no event shall defendants provide to, or receive from, the trustee or the wireless businesses under the trustee's control any non-public or competitively sensitive marketing, sales, or pricing information relating to their respective mobile wireless telecommunications service businesses.

VI

Notification

A. Within two (2) business days following execution of a binding agreement to effect, in whole or in part, any proposed divestiture required by this Final Judgment, the defendant that is divesting the Wireless System Assets, or the trustee, whichever is responsible for effecting the required divestitures, shall notify plaintiff of the proposed divestiture. If the trustee is responsible for the divestiture, the trustee shall similarly notify defendants. The notice shall set forth the details of the proposed divestiture and list the name, address, and telephone number of each person not previously identified who offered to, or expressed an interest in or a desire to, acquire any ownership interest in the Wireless System Assets being divested, together with full details of same.

B. Within fifteen (15) calendar days of receipt by plaintiff of such notice, plaintiff may request from defendants, the proposed purchaser(s), any other third party, or the trustee (if applicable) additional information concerning the proposed divestiture, the proposed purchaser(s), and any other potential purchaser(s). Defendants and the trustee shall furnish any such additional information requested within fifteen (15) calendar days of the receipt of the request, unless the parties shall otherwise agree.

C. Within thirty (3) calendar days after receipt of the notice, or within twenty (20) calendar days after plaintiff has been provided the additional information requested from defendants, the proposed purchaser()s), any third party, and the trustee, whichever is later, plaintiff shall provide written notice to defendants and the trustee, if

there is one, stating whether or not plaintiff objects to the proposed divestiture. If plaintiff provides written notice that it does not object, then the divestiture may be consummated subject only to defendants' limited right to object to the sale under Section V.C. of this Final Judgment. Absent written notice that plaintiff does not object to the proposed purchaser(s) or in the event of an objection by plaintiff, a divestiture proposed under Section IV or V shall not be consummated. Upon objection by a defendant under Section V.B, a divestiture proposed under Section V shall not be consummated unless approved by the Court.

VII

Affidavits

A. Within twenty (20) calendar days of the filing of the Complaint in this matter and every thirty (30) calendar days thereafter until the divestitures have been completed, each defendant shall deliver to plaintiff an affidavit as to the fact and manner of its compliance with Section IV or V of this Final Judgment. Each such affidavit shall include the name, address, and telephone number of each person who, during the preceding thirty (30) days, made an offer to acquire, expressed an interest in acquiring, entered into negotiations to acquire, or was contacted or made an inquiry about acquiring, any interest in the Wireless System Assets and shall describe in detail each contact with any such person during that period. Each such affidavit shall also include a summary of the efforts that defendants have made to solicit a purchaser(s) for the Wireless System Assets and to provide required information to prospective purchasers, including the limitations, if any, on such information. Assuming the information set forth in the affidavit true and complete, any objections by plaintiff to information provided by defendants, including limitations on information, shall be made within fourteen (14) days after receipt of such affidavit.

B. Within twenty (20) calendar days of the filing of the Complaint in this matter, defendants shall deliver to plaintiff an affidavit which describes in reasonable detail all actions defendants have taken and all steps defendants have implemented on an ongoing basis to preserve the Wireless System Assets pursuant to this Final Judgment. Defendants shall deliver to plaintiff an affidavit describing any changes to the efforts and actions outlined in defendants' earlier affidavits filed pursuant to this section within fifteen (15) calendar days after the change is implemented.

C. Defendants shall preserve all records of all efforts made to preserve and divest any or all of the Wireless System Assets until one year after such divestiture has been completed.

VIII

Financing

Defendants shall not finance all or any part of any purchase made pursuant to Section IV or V of this Final Judgment.

IX

Hold Separate

A. Until accomplishment of the divestitures of the Wireless System Assets to purchaser(s) approved by plaintiff pursuant to Section IV.C, each defendant shall take all steps necessary to ensure that each of the wireless businesses that it owns or operates in the Overlapping Wireless Markets shall continue to be operated as a separate, independent, ongoing, economically viable and active competitor to the other mobile wireless telecommunications providers operating in the same license area; and that except as necessary to comply with this Final Judgment, the operation of said wireless businesses (including the performance of decision-making functions relating to marketing and pricing) will be kept separate and apart from, and not influenced by, the operation of the other wireless business, and the books, records, and competitively sensitive sales, marketing, and pricing information associated with said wireless businesses will be kept separate and apart from the books, records, and competitively sensitive sales, marketing, and pricing information associated with the other wireless business.

B. Until the Wireless System Assets in each Overlapping Wireless Market have been divested to purchaser(s) approved by plaintiff, or transferred to a trustee pursuant to Section V of this Final Judgment, each defendant shall in accordance with past practices, with respect to each wireless business that it has an ownership interest in or operates in the Overlapping Wireless Markets (including the assets of both wireless businesses in any Overlapping Wireless Market where the wireless business that will be divested has not yet been decided):

1. Use all reasonable efforts to maintain and increase sales of wireless mobile telephone services, and maintain and increase promotional, advertising, sales, technical assistance and marketing support for the mobile telephone services sold by the wireless businesses;

2. Take all steps necessary to ensure that the Wireless System Assets are fully maintained in operable condition and shall maintain and adhere to normal maintenance schedules;

3. Provide and maintain sufficient lines and sources of credit and working capital to maintain the Wireless System Assets as viable ongoing businesses;

4. Not remove, sell, lease, assign, transfer, pledge or otherwise dispose of or pledge as collateral for loans, any asset of each wireless business that it has an ownership interest in or operates in the Overlapping Wireless Markets, other than in the ordinary course of business, except as approved by plaintiff.

5. Maintain, in accordance with sound accounting principles, separate, true, accurate and complete financial ledgers, books and records that report, on a periodic basis, such as the last business day of each month, consistent with past practices, the assets, liabilities, expenses, revenues, income, profit and loss of each wireless business that it has an ownership interest in or operates in the Overlapping Wireless Markets;

6. Be prohibited from terminating, transferring, or reassigning any employees who work or have worked since April 4, 2000 (other than solely on a temporary assignment basis from another part of SBC or BellSouth) with, or whose principal responsibility relates to the Wireless System Assets, except (a) in the ordinary course of business, (b) for transfer bids initiated by employees pursuant to defendants' regular, established job-posting policies, or (c) as necessary to promote accomplishments of defendants' obligations under this Final Judgment; and

7. Take no action that would impede in any way or jeopardize the licensing, operation, or divestiture of the Wireless System Assets.

C. On or before the consummation of the SBC/BellSouth Wireless Joint Venture, defendants shall assign complete managerial responsibility over each wireless business that they have an ownership interest in or operate in the Overlapping Wireless Markets, to a specified manager who shall not participate in the management of any of defendants' other businesses, until, for each Overlapping Wireless Market, defendants have submitted a definitive Divestiture List pursuant to Section IV.A. Upon submission of the definitive Divestiture List, only the defendant who owns the Wireless System Assets to be divested shall be subject to the provisions of this Section IX of this

Final Judgment. Notwithstanding any of the foregoing, for the purposes of Section IX and for the Los Angeles-San Diego MTA PCS/Cellular Overlap Area only, BellSouth's interests in Wireless System Assets that are not a part of the SBC/BellSouth Wireless Joint Venture are subject to all provisions of this Section IX, and SBC is subject only to the provisions of Section IX.D as it relates to Section VII.

D. Each defendant shall, during the period before all Wireless System Assets have been divested to a purchaser(s) or transferred to the trustee pursuant to Section V of this Final Judgment, appoint a person or persons to oversee the Wireless System Assets owned by that defendant, who will be responsible for defendants' compliance with the requirements of Sections VII and IX of this Final Judgment. Such person(s) shall not be an officer, director, manager, employee, or agent of the other defendant.

X

Compliance Inspection

For the purposes of determining or securing compliance of defendants with this Final Judgment, or of determining whether the Final Judgment should be modified or vacated, and subject to any legally recognized privilege, from time to time duly authorized representatives of the United States Department of Justice, including consultants and other persons retained by plaintiff, upon written request of a duly authorized representative of the Assistant Attorney General in charge of the Antitrust Division, and on reasonable notice to the relevant defendant, shall be permitted:

1. access during office hours of defendants to inspect and copy, or at plaintiff's option, demand defendants provide copies of, all books, ledgers, accounts, correspondence, memoranda, and other records and documents in the possession or control of defendants, who may have counsel, present, relating to any matters contained in this Final Judgment; and

2. to interview, either informally or on the record, defendants' officers, directors, employees, or agents, who may have their individual counsel present, regarding such matters. The interviews shall be subject to the interviewee's reasonable convenience and without restraint or interference by defendants.

A. Upon the written request of the Assistant Attorney General in charge of the Antitrust Division, defendants shall submit written reports, under oath if requested, relating to any of the matters contained in this Final Judgment as may be requested.

B. No information or documents obtained by the means provided in this section shall be divulged by plaintiff to any person other than a duly authorized representative of the Executive Branch of the United States, or to the FCC (pursuant to a customary protective order or a waiver of confidentiality by defendants), except in the course of legal proceedings to which the United States is a party (including grand jury proceedings), or for the purpose of securing compliance with this Final Judgment, or as otherwise required by law.

C. If, at the time information or documents are furnished by defendants to plaintiff, defendants represent and identify in writing the material in any such information or documents as to which a claim or protection may be asserted under Rule 26(c)(7) of the Federal Rules of Civil Procedure, and mark each pertinent page of such material, ''Subject to claim of protection under Rule 26(c)(7) of the Federal Rules of Civil Procedure,'' then plaintiff shall give defendants ten (10) calendar days' notice prior to divulging such material in any legal proceeding (other than a grand jury proceeding) to which defendants are not a party.

XI

No Reacquisition

Defendants may not reacquire any part of the spectrum licenses issued by the Federal Communications Commission (''FCC'') and all other licenses, permits and authorizations divested pursuant to this Final Judgment during the term of this Final Judgment.

XII

Retention of Jurisdiction

Jurisdiction is retained by this Court for the purposes of enabling any of the parties to this Final Judgment apply to this Court at any time for such further orders and directions as may be necessary or appropriate for the construction or carrying out of this Final Judgment, for the modification of any of the provisions hereof, for the enforcement of compliance herewith, and for the punishment of any violations hereof.

XIII

Expiration of Final Judgment

Unless this Court grants an extension, this Final Judgment shall expire on the tenth anniversary of the date of its entry.

XIV

Public Interest Determination

The entry of this judgment is in the public interest.

United States District Judge

Competitive Impact Statement

The United States, pursuant to Section 2(b) of the Antitrust Procedures and Penalties Act, 15 U.S.C. 16(b)-(h) (''APPA''), files this Competitive Impact Statement relating to the proposed Final Judgment submitted for entry in this civil antitrust proceeding.

I. Nature and Purpose of the Proceeding

The United States filed a civil antitrust Complaint on August 30, 2000, alleging that the proposed joint venture between SBC Communications Inc. (''SBC'') and BellSouth Corporation (''BellSouth'') would violate Section 7 of the Clayton Act, 15 U.S.C. 18, by lessening competition in the markets for wireless mobile telephone services in 11 metropolitan statistical areas (''MSAs'') and rural service areas (''RSAs'') in California, Indian and Louisiana. In addition, this combination affects five additional MSAs and RSAs where competing cellular mobile wireless telephone businesses are owned in whole or part by SBC and BellSouth. These areas are identified in the Complaint as the ''Overlapping Wireless Markets.''

Shortly before the Complaint in this matter was filed, the United States and defendants reached agreement on the terms of a proposed Final Judgment, which requires SBC and BellSouth to divest one of the wireless telephone businesses in each of the Overlapping Wireless Markets. In each of the Overlapping Wireless Markets, defendants can choose which wireless business to divest. The proposed Final Judgment also contains provisions, explained below, designed to minimize any risk of competitive harm that otherwise might arise pending completion of the divestiture. The proposed Final Judgment and a Stipulation by plaintiff and defendants consenting to its entry were filed simultaneously with the Complaint.

The United States and defendants have stipulated that the proposed Final Judgment may be entered after compliance with the Antitrust Procedures and Penalties Act, 15 U.S.C. 16 (''APPA''). Entry of the proposed Final Judgment would terminate this action, except that the Court would retain jurisdiction to construe, modify, or enforce the provisions of the proposed Final Judgment and to punish

violations thereof. The United States and defendants have also stipulated that defendants will comply with the terms of the proposed Final Judgment from the date of signing of the Stipulation, pending entry of the Final Judgment by the Court. Should the Court decline to enter the Final Judgment, defendants have also committed to continue to abide by its requirements until the expiration of time for any appeals of such ruling.

II. Description of the Events Giving Rise to the Alleged Violation

A. The Defendants and the Proposed Transaction

SBC and BellSouth are two of the remaining four Regional Bell Operating Companies (''RBOCs'') created in 1984 by the consent decree settling the United States' antitrust case against American Telephone & Telegraph Co. SBC and BellSouth each provide local exchange services in distinct regions, and they also provide wireless mobile telephone services, including cellular mobile telephone services and personal communications services (''PCS''), both within and outside of their local exchange service regions.

SBC, with headquarters in San Antonio, Texas, is one of the largest RBOCs in the United States, with approximately 60 million total local telephone access lines. In 1999, SBC had revenues in excess of $49 billion. SBC provides local telephone services to retail customers in Arkansas, California, Connecticut, Illinois, Indiana, Kansas, Michigan, Missouri, Nevada, Ohio, Oklahoma, Texas and Wisconsin. With the exception of Nevada, SBC also provides cellular mobile telephone services or other wireless mobile telephone services in those states as well as in some areas outside its local exchange service region, including the District of Columbia and areas within the States of Delaware, Hawaii, Kentucky, Louisiana, Maryland, Massachusetts, New Jersey, New York, Pennsylvania, Rhode Island, Virginia, and West Virginia. SBC is the nation's third largest wireless mobile telephone provider, with approximately 11.2 million subscribers nationwide.

BellSouth, with headquarters in Atlanta, Georgia, is the third largest RBOC in the United States, with approximately 24 million total local telephone access lines. In 1999, BellSouth had revenues in excess of $25 billion. BellSouth provides local telephone service to retail customers in Alabama, Florida, Georgia, Kentucky, Louisiana, Mississippi, North Carolina, South Carolina and Tennessee, and also provides cellular mobile telephone service in these states, as well as in some states outside its local exchange service region, including Arkansas, California, Indiana, Pennsylvania, Texas and Virginia. BellSouth is a major wireless mobile telephone service provider, with approximately 5.6 million subscribers nationwide.

On April 4, 2000, SBC and BellSouth entered into a Contribution and Formation Agreement under which the two companies agreed to combine their wireless telecommunications service businesses into a business with approximate annual revenues of $10.2 billion. If this transaction is consummated, the combined total of SBC's and BellSouth's cellular and other wireless mobile telephone service subscribers will be 16.2 million.

B. Wireless Mobile Telephone Services

Wireless mobile telephone services permit users to make and receive telephone calls, using radio transmissions, while traveling by car or by other means. The mobility afforded by this service is a valuable feature to consumers, and cellular and other wireless mobile telephone services are commonly priced at a substantial premium above landline services. In order to provide this capability, wireless carriers must deploy an extensive network of switches and radio transmitters and receivers, and interconnect this network with the networks of local and long distance landline carriers, and with the networks of other wireless carriers. In 1999, revenues from the sale of wireless mobile telephone services totaled approximately $40 billion in the United States.

Initially, wireless mobile telephone services were provided principally by two cellular systems in each MSA and RSA license area. Cellular licenses were awarded by the Federal Communications Commission (''FCC'') beginning in the early 1980's, within any given MSA or RSA.[1] Providers of Specialized Mobil Radio (''SMR'') services typically were also authorized to operate with some additional spectrum in these areas, including the Overlapping Wireless Markets.

In 1995, the FCC allocated (and subsequently issued licenses for) additional spectrum for the provision of PCS, a type of wireless telephone service that includes wireless mobile telephone services comparable to those offered by cellular carriers. In 1996, one SMR spectrum licensee began to use its SMR spectrum to offer wireless mobile telephone services, comparable to that offered by cellular providers and bundled with dispatch services, in a number of areas including some of the Overlapping Wireless Markets. While the areas for which PCS providers are licensed (major trading areas (''MTAs'') and basic trading areas (''BTAs'')) differ somewhat from the cellular MSAs and RSAs, they generally overlap with them. In many areas, including most of the Overlapping Wireless Markets, not all of the PCS license holders have started to offer services or even begun to construct the facilities necessary to begin offering service. The PCS providers have tended to enter in the largest cities first, entering in smaller markets only later and not on as wide a scale. Moreover, even in those areas where one or more PCS providers have constructed their networks and have started to offer service, including the Overlapping Wireless Markets, the incumbent cellular providers, such as SBC and BellSouth, still typically have substantially larger market shares than the new entrants.

C. Anticompetitive Consequences of the Proposed Acquisition

SBC and BellSouth, or firms in which they have an interest, are competing providers of wireless mobile telephone services in 16 cellular license areas in three states. These areas are referred to in the Complaint as follows:

I. Cellular Overlap Areas
- A. Baton Rouge MSA
- B. New Orleans MSA
- C. Louisiana 6 RSA—Iberville
- D. Louisiana 8 RSA—St. James
- E. Louisiana 9 RSA—Plaquemines

II. PSC/Cellular Overlap Areas
- A. Los Angeles—San Diego MTA
- 1. Los Angeles MSA
- B. Indianapolis MTA
- 1. Anderson MSA
- 2. Bloomington MSA
- 3. Indianapolis MSA
- 4. Lafayette MSA
- 5. Muncie MSA
- 6. Terre Haute MSA
- 7. Indiana 5 RSA—Warren
- 8. Indiana 7 RSA—Owen
- 9. Indiana 8 RSA—Brown
- 10. Indiana 9 RSA—Decatur

In the Overlapping Wireless Markets, the population potentially addressable by wireless mobile telephone systems exceeds 20 million.

SBC and BellSouth are direct competitors in wireless mobile telephone services in the Cellular

[1] 25 MHz of spectrum was allocated to each cellular system in an MSA or RSA. MSAs are the 306 urbanized areas in the United States, defined by the federal government, and used by the FCC to define the license areas for urban cellular systems. RSAs are the 428 areas defined by the FCC used to define the license areas for rural cellular systems outside of MSAs.

Overlap Areas. The cellular businesses owned in whole or part by SBC and BellSouth are the only two providers of cellular mobile telephone services, and the two primary providers of all wireless mobile telephone services, in the Cellular Overlap Areas. In addition, SBC and BellSouth are direct competitors in wireless mobile telephone services in the PCS/Cellular Overlap Areas. In each of the Overlapping Wireless Markets, the wireless businesses owned in whole or part by SBC and BellSouth compete to sell the best quality service at the lowest possible rates and are among each other's most significant competitors. In each of the PCS/Cellular Overlap Areas, the cellular business owned in whole or part by BellSouth and the PCS business owned by SBC are two of a small number of providers of wireless mobile telephone services.

Therefore, the SBC/BellSouth joint venture would cause the level of concentration among firms providing wireless mobile telephone services in each of the Overlapping Wireless Markets to increase significantly. A high level of concentration in the provision of wireless mobile telephone services already exists in each of the Overlapping Wireless Markets. In the Cellular Overlap Areas, SBC and BellSouth individual market shares, measured on the basis of the number of subscribers, ranges from 20 to 70%. The combined market share of SBC and BellSouth in the provision of wireless mobile telephone services, measured by the number of subscribers, is in the range of 65 to 95%, taking into account other operational wireless mobile competitors. As measured by the Herfindahl-Hirschman Index (''HHI''), which is commonly employed by the Department of Justice in merger analysis and is explained in more detail in Appendix A to the Complaint, concentration in these markets is already in excess of 2600, well above the 1800 threshold at which the Department normally considers a market to be highly concentrated. After the contribution of the wireless businesses to the joint venture, the HHI in these markets will be in excess of 4800.

In each of the PCS/Cellular Overlap Areas, the BellSouth's cellular business has one of the two largest market shares in the provision of wireless mobile telephone services, and SBC is one of a small number of new PCS entrants into these markets. In one of these markets, such as the Los Angeles-San Diego MTA, SBC was the first new PCS entrant, is the third largest wireless firm in terms of number of subscribers, and has managed to garner a significant share. Competition between SBC and BellSouth, created by SBC's entry into markets that were previously an effective duopoly, has resulted in lower prices and higher quality in these markets than would otherwise have existed absent such competition. There is already a high level of concentration in the provision of wireless mobile telephone services in the PCS/Cellular Overlap Areas. In virtually all, the individual shares of the two cellular carriers—one of which is owned in whole or part by BellSouth—are in the range of 30 to 50% and the HHI exceeds 2000. In the PCS/Cellular Overlap Areas, the combined market share of SBC and the cellular business in question is generally in the 45 to 65% range.

If BellSouth and SBC combine their wireless telecommunications service businesses, the PCS/Cellular Overlap Areas will become significantly more concentrated, and the competition between SBC and BellSouth in wireless mobile telephone services in these markets will be eliminated. As a result of the loss in competition between SBC and BellSouth wireless mobile telephone services, there will be an increased likelihood both of unilateral actions by the combined firm in these markets to increase prices, diminish the quality or quantity of service provided, or refrain from making investments in network improvements, and of coordinated interaction among the limited number of remaining competitors that could lead to similar anticompetitive results. Therefore, the likely effect of the joint venture between SBC and BellSouth is that prices would increase, and the quality or quantity of service together with incentives to improve network facilities would decrease, in the provision of wireless mobile telephone services in the PCS/Cellular Overlap Areas.

It is unlikely that new entry in response to a small but significant price increase by the combined company for wireless mobile telephone services in the Overlapping Wireless Markets would be timely and sufficient to mitigate the competitive harm resulting form this joint venture, if it were to be consummated.

For these reasons, the United States concluded that the joint venture as proposed may substantially lessen competition, in violation of Section 7 of the Clayton Act, in the provision of wireless mobile telephone services in the Overlapping Wireless Markets.

III. Explanation of the Proposed Final Judgment

A. The Divestiture Requirement

The proposed Final Judgment will preserve competition in the sale of mobile wireless telephone services in each of the Overlapping Wireless Markets by requiring defendants to divest one of their two wireless telephone businesses in each of the Overlapping Wireless Markets. This divestiture will eliminate the change in market structure caused by the joint venture.

The divestiture requirements of the proposed Final Judgment, as stated in Sections IV.A and II.C, direct defendants to divest one of their wireless telephone businesses (to be selected by defendants) in each of the Overlapping Wireless Markets. Section IV.C permits different wireless businesses in separate Overlapping Wireless Markets to be divested to different purchasers, but requires that, for any individual wireless business, the Wireless System Assets be divested entirely to a single purchaser, unless the United States otherwise consents in writing.

The proposed Final Judgment's divestiture provisions are intended to accomplish the ''complete divestiture of the entire business of one of the two wireless system in each of the Overlapping Wireless Markets,'' as Section II.C states. Section II.C also specifies in detail the types of assets to be divested, which collectively are described throughout the consent decree as ''Wireless System Assets,'' and addresses some special circumstances concerning the divestiture of those assets. In all of the Overlapping Wireless Markets, Wireless System Assets means all types of assets, tangible and intangible, used by defendants in the operation of each of the wireless businesses to be divested, including the provision of long distance telecommunications service for wireless calls. Section II.C enumerates in detail, without limitation, particular types of assets covered by the divestiture requirement.

For the most part, the divesting defendant is required to transfer to the purchaser the complete ownership and/or other rights to the Wireless System Assets. However, the joint venture will retain a number of other wireless businesses in areas that do not overlap, and prior to the joint venture each defendant may have had certain assets that were used substantially in the operations of its overall wireless business and that must be retained to some extent to continue the existing

operations of the wireless businesses not being divested. Section II.C permits special divestiture arrangements for such assets if they are not capable of being divided between the divested and retained wireless businesses, or if the divesting defendant and the purchaser agree not to divide them. For these assets, the divestiture requirement is satisfied if the divesting defendant grants to the purchaser, at the election of the purchaser, an option to obtain a non-exclusive, transferable license for a reasonable period to use the assets in the operation of the wireless business being divested, so as to enable to the purchaser to continue to operate the divested wireless businesses without impairment.

The definition of Wireless System Assets in Section II.C contains special provisions relating to intellectual property. One addresses intellectual property rights that defendants may have under third-party licenses that could not be transferred to a purchaser entirely or by license without the consent of the third-party licensor. If any such assets are used by the wireless businesses being divested, defendants must identify them in a schedule submitted to plaintiff and filed with the Court as expeditiously as possible following the filing of the Complaint, in any event, prior to any divestiture and before the Court approves the proposed Final Judgment. Defendants must explain the necessary consents and how a consent would be obtained for each asset. This proviso is not intended to afford defendants any opportunity to withhold intellectual property rights over which they have any control, which could impair the ability of a purchaser to use the divested wireless business to compete effectively. It relates only to intellectual property assets that defendants have no power to transfer themselves, and defendants must do all that is possible to transfer the entire business of the divested wireless businesses. To make this clear, Section IV.H obligates defendants to cooperate with any purchaser as well as a trustee, if any, to seek to obtain the necessary third-party consents, if any assets require such consents before they may be transferred to a purchaser.

Another proviso relates to certain specific trademarks, trade names and service marks. Section II.C, defining the Wireless System Assets to be divested, generally requires the divestiture of trademarks, trade names and service marks, with the sixteen specified exceptions which contain names under which defendants' retained wireless business, or their corporate parents or affiliates, do business. Such trademarks, trade names and service marks, like other assets, are either to be divested in their entirety, except for marks and names that must be retained to continue the existing operations of defendants' remaining wireless properties and that are not capable of being divided (or that the divesting defendant and purchaser agree not to divide), which are to be made available to the purchaser through a non-exclusive, transferable license.

Under limited circumstances, defendants are allowed to retain specified portions of the Wireless System Assets in the Overlapping Wireless Markets. First, Section II.C provides that if defendants elect to divest SBC's interest in a PCS business in one of the PCS/Cellular Overlap Areas, defendants may retain up to 10 MHz of broadband PCS spectrum within that PCS/Cellular Overlap Area upon completion of the divestiture of the Wireless System Assets. In this instance, defendants will still be required to divest the entire PCS business, including 20 MHz of broadband PCS spectrum, to insure that the market structure does not change as a result of the joint venture and that the divested business will be able to compete as effectively under new ownership as under its current ownership.

Section IV contains other provisions to facilitate divestiture, including notification of the availability of the Wireless System Assets for purchase in Section IV.D, access to information about the Wireless System Assets in Section IV.E, and warranting that the Wireless System Assets (except for the Wireless System Assets in the Los Angeles-San Diego PCS/Cellular Overlap) will be operational on the date of sale in Section IV.I. In addition, to ensure that a purchaser will be able to operate the divested wireless businesses without impairment, Section IV.G prohibits defendants from interfering with a purchaser's negotiations to retain any employees who work or have worked with the Wireless System Asset since the date of the announcement of the joint venture, or whose principal responsibility relates to the Wireless System Assets.

B. Timing of Divestiture

In antitrust cases involving mergers or joint ventures in which the United States seeks a divestiture remedy, it requires completion of the divestiture within the shortest time period reasonable under the circumstances. The proposed Final Judgment in this case requires, in Section IV.A, the divestitures of the Wireless System Assets in the Overlapping Wireless Markets on a strict schedule, but provides defendants with some flexibility in recognition of the special timing issues involved in a divestiture of this size and complexity.

Under Section IV.A, defendants must divest the Wireless System Assets of one of the two wireless businesses in the Cellular Overlap Area and the Indianapolis MTA PCS/Cellular Overlap Area on or before consummation of the transaction that gives rise to the overlap. The divestitures of the Wireless System Assets for the Los Angeles-San Diego MTA PCS/Cellular Overlap Area shall occur prior to or at the same time as consummation of the transaction that gives rise to the overlap, or January 27, 2001, whichever is later. BellSouth's Wireless System Assets in Los Angeles-San Diego MTA PCS/Cellular Overlap Area are held in partnership with AT&T Wireless Services, Inc. Various provisions of Section IV and IX allow defendants to accomplish the objectives of the Final Judgment consistent with BellSouth's partnership obligations. Section IV.A.2, which allows a longer time frame for defendants to complete the divestiture in the Los Angeles-San Diego MTA PCS/Cellular Overlap Area, is one such provision. Plaintiff may, in its sole discretion, extend this date for divestitures in the PCS/Cellular Overlap Areas by up to two thirty-day periods. If one or more divestitures have not been completed as of the date of the consummation of the transaction that gives rise to the overlap, defendants will submit to plaintiff a definitive Divestiture List identifying the specific Wireless System Assets in each of the Overlapping Wireless Markets that will be divested.

The divestiture timing provisions of the proposed Final Judgment will ensure that the divestitures are carried out in a timely manner, and at the same time will permit the parties an adequate opportunity to accomplish the divestitures through a fair and orderly process. Even if all Wireless System Assets have not been divested upon consummation of the transaction that gives rise to the overlap, there will be no adverse impact on competition given the short duration of the period of common ownership and the detailed requirements of the Hold Separate Order contained in Section IX of the Final Judgment.

In addition, the proposed Final Judgment requires in Section IV.B that, in carrying out the divestitures, defendants comply with all of the applicable rules of the FCC, or any waiver of such rules or other authorization granted by the FCC. These rules include 47 C.F.R. 20.6 (spectrum aggregation) and 47 C.F.R. 22.942

(cellular cross-ownership).[2] These FCC requirements may add to, but cannot subtract from or impair, the requirements of the proposed Final Judgment, since Section IV.B specifies that authorization by the FCC to conduct divestiture of a wireless business in a particular manner will not modify any of the requirements of the decree. The provisions of the proposed Final Judgment to avoid any conflict with the FCC's rules.

C. Use of a Trustee Subsequent to Consummation of the Acquisition

The proposed Final Judgment provides in Section IV.A that SBC and BellSouth must divest the Wireless System Assets in each of the Overlapping Wireless Markets in accordance with the schedule contained therein, either to purchasers acceptable to plaintiff in its sole discretion, or to a trustee designated pursuant to Section V of the Final Judgment. As part of this divestiture, SBC and BellSouth must relinquish any direct or indirect financial ownership interests and any direct or indirect role in management or participation in control. Pursuant to Section V of the proposed Final Judgment, the trustee will own and control the systems until they are sold to a final purchaser, subject to safeguards to prevent SBC and BellSouth from influencing their operation.

Section V details the requirements for the establishment of the trust, the selection and compensation of the trustee, the responsibilities of the trustee in connection with divestiture and operation of the Wireless System Assets, and the termination of the trust. If defendants have not divested all of their Wireless System Assets in the Overlapping Wireless Markets to approved purchasers in accordance with Section IV.A, Section V.A requires: (1) defendants to identify the Wireless System Assets in each Overlapping Wireless Market to be divested; (2) the United States to select a trustee and apply to the Court for appointment of a trustee; (3) defendants to submit a form of Trust Agreement consistent with the terms of the Final Judgment, and which form agreement must have received approval by the United States; and (4) defendants, after receiving FCC approval for the license transfers, to divest irrevocably the unsold Wireless System Assets to the trustee.

The trustee will have the obligation and the sole responsibility, under Section V.B, for the divestiture of any transferred Wireless System Assets. The trustee has the authority to accomplish divestitures at the earliest possible time and ''at the best price then obtainable upon a reasonable effort by the trustee.'' In addition, notwithstanding any provision to the contrary, plaintiff may, in its sole discretion, require defendants to include in the Wireless System Assets to be divested additional PCS spectrum it proposes to retain under Section II.C if it would facilitate a prompt divestiture to an acceptable purchaser. This provision allows plaintiff, in its discretion, to require defendants to divest additional PCS spectrum to insure that the trustee can promptly locate and divest to a purchaser acceptable to plaintiff. Defendants are not entitled to object to divestiture based on the adequacy of the price the trustee obtains or any other ground, unless the trustee's conduct amounts to malfeasance. The terms of the trustee's compensation, under Section V.D, will provide incentives based on the price and terms of the divestiture and the speed with which it is accomplished. As provided by Sections V.B and V.D, defendants will pay the compensation and expenses of the trustee, and of any investment bankers, attorneys or other agents that the trustee finds reasonably necessary to assist in the divestiture and the management of the Wireless System Assets.

The trusteeship mechanism has been used by the FCC, in a variety of contexts, to provide a short period of time in which to complete a sale of a spectrum licensee that must be divested, while permitting the broader merger or acquisition that necessitates the divestiture to go forward. In this context, the critical feature of the trusteeship arrangement is that the trustee will not only have responsibility for sale of the Wireless System Assets, but will also be the authorized holder of the wireless license, with full responsibility for the operations, marketing and sales of the wireless business to be divested, and will not be subject to any control or direction by defendants. Defendants will no longer have any role in the ownership, operation or management of the Wireless System Assets to be divested following consummation of their joint venture, as provided by Section V.I, other than the right to receive the proceeds of the sale, and certain obligations to provide cooperation of the trustee in order to complete the divestiture, as indicated in Section V.E. Defendants are precluded under Section V.I from communicating with the trustee, or seeking to influence the trustee, concerning the divestiture or the operation and management of the wireless businesses transferred, apart from the limited communications necessary to carry out the Final Judgment and to provide the trustee with the necessary resources and cooperation to complete the divestitures. Defendants and the trustee are subject to an absolute prohibition on exchanging any non-public or competitively sensitive marketing, sales or pricing information relating to either of the wireless businesses in the Overlapping Wireless Markets. These safeguards will protect against any competitive harm that could arise from coordinated behavior or information sharing between the two wireless businesses during the limited period while sale of the Wireless System Assets is not yet complete. They ensure that the trusteeship arrangement is consistent with the FCC's rules.

Section V.G requires the trustee to divest the Wireless System Assets to a purchaser or purchasers acceptable to the plaintiff no later than 180 days after the assets are transferred to the trustee. However, since the FCC's approval is required for the transfer of the wireless licenses to a purchaser, Section V.G. provides that if applications for transfer of a wireless license have been filed by the FCC within the 180-day period, but the FCC has not granted approval before the end of that time, the period for divestiture of the specific Wireless System Assets covered by the license that cannot yet be transferred shall be extended until five days after the FCC's approval is received. This extension is to be applied only to the individual wireless license affected by the delay in approval of the license transfer and does not entitle defendants to delay the divestiture of any other Wireless System Assets for which license transfer approval has been granted.

D. Criteria for the United States' Approval of Purchasers

Under the proposed Final Judgment, the United States has an important role in the approval of purchasers for each of the divested wireless businesses, to ensure that the purchasers chosen by defendants or the trustee are adequate from a competitive viewpoint. The United States' approval or rejection of a

[2] The FCC's spectrum aggregation rules, in 47 C.F.R. 20.6, do not permit a licensee to have an attributable interest in more than 45 MHz of spectrum licensed for cellular, PCS or SMR with significant overlap in any geographic area. The FCC will attribute an interest if it is controlling, or if in most cases it is 20% or more of the equit7y, outstanding stock or voting stock of the licensee. The FCC's cellular cross-ownership rules, in 47 C.F.R. 22.942, also prohibit a licensee or any person controlling a licensee from having a direct or indirect ownership interest of more than 5% in both cellular systems in an overlapping cellular geographic service area, unless such interests pose ''no substantial threat to competition.''

purchaser is at its sole discretion, as Section IV.A specifies, but the consent decree also embodies certain criteria that the United States will apply in making the approval decision.

In the case of any divestiture, by defendants or the trustee, it is important to ensure that the ongoing wireless businesses go to purchasers with the capability and intent to operate them as effective competitors in the lines of business they already serve, and that there are no conditions restricting competition in the terms of the sale. Specifically, Section IV.C of the proposed Final Judgment requires that the divestitures of Wireless System Assets be made to a purchaser or purchasers for whom it is demonstrated to plaintiff's sole satisfaction that: (1) The Purchaser(s) has the capability and intent to compete effectively in the provision of wireless mobile telephone service using the Wireless System Assets; (2) the purchaser(s) has the managerial, operational and financial capability to compete effectively in the provision of wireless mobile telephone service using the Wireless System Assets; and (3) none of the terms of any agreement between the purchaser(s) and either of defendants shall give defendants the ability unreasonably (i) to raise the purchaser(s)'s costs, (ii) to lower the purchaser(s)'s efficiency, (iii) to limit any line of business which a purchaser(s) may choose to pursue using the Wireless System Assets, or otherwise to interfere with the ability of the purchaser(s) to compete effectively. All of these criteria must be satisfied whether the divestiture is accomplished by defendants or the trustee.

E. Other Provisions of the Decree

Section III specifies the persons to whom the Final Judgment is applicable, and provides for the Final Judgment to be applicable to certain Interim Parties to whom defendants might transfer the Wireless System Assets, other than purchasers approved by the United States.

Section VI obliges defendants, or the trustee if applicable, to notify the United States of any planned divestiture of Wireless System Assets within two business days of executing a binding agreement with a purchaser. It enables the United States to obtain information to evaluate the chosen purchaser as well as other prospective purchasers who expressed interest and establishes a procedure for the United States to notify defendants and the trustee whether it objects to a divestiture. The United States' notification of its lack of objection is necessary for a divestiture to proceed. This section also provides for an objection by defendants to a sale by the trustee under the limited situation of alleged malfeasance, but in that case it is possible for the Court to approve a sale over defendants' objection.

Section VII establishes affidavit requirements for defendants to report to the United States on their compliance with the proposed Final Judgment, their activities in seeking to divest the Wireless System Assets prior to consummating their joint venture, and their actions to preserve the Wireless System Assets to be divested. Under V.F, the trustee also has monthly reporting obligations concerning the efforts made to divest the Wireless System Assets.

Section VIII, prohibits defendants from financing all or any part of a purchase made by an acquirer of the Wireless System Assets, whether the divestiture is carried out by defendants or by the trustee.

Section IX, the Hold Separate Order, contains important requirements concerning the operation of the wireless businesses before divestiture is complete, and the preservation of the Wireless System Assets as a viable, ongoing business. The obligations of Section IX.A fall on both defendants and both wireless businesses in any Overlapping Wireless Market, obliging them to ensure that such wireless businesses continue to be operated as separate, independent, ongoing, economically viable and active competitors to the other wireless mobile telecommunications providers in the same area. Section IX.A. requires separation of the operations of the two wireless businesses and their books, records and competitively sensitive information. The requirements of Section IX.A serve to ensure that defendants maintain their two wireless businesses in the Overlapping Wireless Markets as fully separate competitors prior to consummating their joint venture, notwithstanding their expectations that the joint venture will take place, and reinforce the provisions of Section VI concerning the separation of defendants and the trustee after the joint venture is consummated but while there are still Wireless System Assets awaiting sale.

Section IX.B requires the defendant whose assets will be divested (or both, if it has not yet been decided which system will be divested in a particular market) to take certain specified steps to preserve the assets in accordance with past practices. These steps include maintaining and increasing sales, maintaining the assets in operable condition, providing sufficient credit and working capital, not selling the assets (except with approval of plaintiff), not terminating, transferring or reassigning employees who work with the assets (with certain limited exceptions), and not taking any actions to impede or jeopardize the sale of the assets. Section IX.C reinforces the other provisions of the Hold Separate Order by requiring defendants to appoint a specific manager for the Wireless System Assets, who will not participate in the management of any of defendants' other businesses. Section IX.D obliges each defendant, during the period while they still control Wireless System Assets, to appoint persons not affiliated with the other defendant to oversee the Wireless System Assets to be divested and to be responsible for compliance with the Final Judgment.

In order to ensure compliance with the Final Judgment, Section X gives the United States various rights, including inspection of defendants' records, the ability to conduct interviews and take sworn testimony of defendants' officers, directors, employees and agents, and to require defendants to submit written reports. These rights are subject to legally recognized privileges, and information the United States obtains using these powers is protected by specified confidentiality obligations, which permit sharing of information with the FCC under a customary protective order issued by that agency or a waiver of confidentiality. Under Section III.B, purchasers of the Wireless System Assets must also agree to give the United States similar access to information.

The Court retains jurisdiction under Section XII, and Section XIII provides that the proposed Final Judgment will expire on the tenth anniversary of the date of its entry, unless extended by the Court. Although the required divestitures will be accomplished in a considerably shorter time, defendants are also precluded from reacquiring the divested spectrum licenses and all other licenses, permits and authorization's within the term of the decree, pursuant to Section XI.

IV. Remedies Available to Potential Private Litigants

Section 4 of the Clayton Act, 15 U.S.C. 15, provides that any person who has been injured as a result of conduct prohibited by the antitrust laws may bring suit in federal court to recover three times the damages that the person has suffered, as well as costs and reasonable attorneys' fees. Entry of the proposed Final Judgment will neither impair nor assist the bringing of any private antitrust damage action. Under

the provisions of Section 5(a) of the Clayton Act, 15 U.S.C. 16(a), the proposed Final Judgment has no *prima facie* effect in any subsequent private lawsuit that may be brought against defendants.

V. Procedures Available for Modification of the Proposed Final Judgment

Plaintiff and defendants have stipulated that the proposed Final Judgment may be entered by the court after compliance with the provisions of the APPA, provided that the United States has not withdrawn its consent. The APPA conditions entry upon the Court's determination that the proposed Final Judgment is in the public interest.

The APPA provides a period of at least sixty (60) days preceding the effective date of the proposed Final Judgment within which any person may submit to the United States written comments regarding the proposed Final Judgment. Any person who wishes to comment should do so within sixty (60) days of the date of publication of this Competitive Impact Statement in the **Federal Register**. The United States will evaluate and respond to the comments. All comments will be given due consideration by the United States, which remains free to withdraw its consent to the proposed Final Judgment at any time prior to entry. The comments and the responses of the United States will be filed with the Court and published in the **Federal Register**.

Written comments should be submitted to: Donald J. Russell, Chief, Telecommunications Task Force, Antitrust Division, United States Department of Justice, 1401 H Street, NW., Suite 8000, Washington, DC 20530.

The proposed Final Judgment provides, in Section XII, that the Court retains jurisdiction over this action, and the parties may apply to the Court for any order necessary or appropriate to carry out or construe the Final Judgment, to modify any of its provisions, to enforce compliance, and to punish any violations of its provisions.

VI. Alternatives to the Proposed Final Judgment

The United States considered, as an alternative to the proposed Final Judgment, seeking an injunction to block consummation of the joint venture and a full trial on the merits. The United States is satisfied, however, that the divestiture of Wireless System Assets and other relief contained in the proposed Final Judgment will preserve competition in the provision of wireless mobile telephone services in the Overlapping Wireless Markets. This proposed Final Judgment will also void the substantial costs and uncertainty of a full trial on the merits on the violations alleged in the complaint. Therefore, the United States believes that there is no reason under the antitrust laws to proceed with further litigation if the divestitures of the Wireless System Assets are carried out in the manner required by the proposed Final Judgment.

VII. Standard of Review Under the APPA for Proposed Final Judgment

The APPA requires that proposed consent judgments in antitrust cases brought by the United States be subject to a sixty (60) day comment period, after which the court shall determine whether entry of the proposed Final Judgment ''is in the public interest.'' In making that determination, the court *may* consider—

> (1) the competitive impact of such judgment, including termination of alleged violations, provisions for enforcement and modification, duration or relief sought, anticipated effects of alternative remedies actually considered, and any other considerations bearing upon the adequacy of such judgment;
>
> (2) the impact of entry of such judgment upon the public generally and individuals alleging specific injury from the violations set forth in the compliant including consideration of the public benefit, if any, to be derived from a determination of the issues at trial.

15 U.S.C. 16(e) (emphasis added). As the United States Court of Appeals for the D.C. Circuit held, this statute permits a court to consider, among other things, the relationship between the remedy secured and the specific allegations set forth in the government's compliant, whether the decree is sufficiently clear, whether enforcement mechanisms are sufficient, and whether the decree may positively harm third parties. *See United States* v. *Microsoft,* 56 F.3d 1448, 1461–62 (D.C. Cir. 1995).

In conducting this inquiry, ''[t]he Court is nowhere compelled to go to trial or to engage in extended proceedings which might have the effect of vitiating the benefits of prompt and less costly settlement through the consent decree process.'' [3] Rather,

> [a]bsent a showing of corrupt failure of the government to discharge its duty, the Court, in making its public interest finding, should . . . carefully consider the explanations of the government in the competitive impact statement and its responses to comments in order to determine whether those explanations are reasonable under the circumstances.

United States v. *Mid-America Dairymen, Inc.,* 1977–1 Trade Cas (CCH) ¶ 61,508, at 71,980 (W.D. Mo. 1977).

Accordingly, with respect to the adequacy of the relief secured by the decree, a court may not ''engage in an unrestricted evaluation of what relief would best serve the public.'' *United States* v. *BNS, Inc.,* 858 F.2d 456, 462 (9th Cir. 1988) (citing *United States* v. *Bechtel Corp.,* 648 F.2d 660, 666 (9th Cir.), *cert. denied,* 454 U.S. 1083 (1981)); *see also Microsoft,* 56 F.3d at 1460–62. Precedent requires that

> The balancing of competing social and political interests affected by a proposed antitrust consent decree must be left, in the first instance, to the discretion of the Attorney General. The court's role in protecting the public interest is one of insuring that the government has not breached its duty to the public in consenting to the decree. The court is required to determine not whether a particular decree is the one that will best serve society, but whether the settlement is *''within the reaches of the public interest.''* More elaborate requirements might undermine the effectiveness of antitrust enforcement by consent decree. [4]

The proposed Final Judgment, therefore, should not be reviewed under a standard of whether it is certain to eliminate every anticompetitive effect of a particular practice or whether it mandates certainty of free competition in the future. Court approval of a final judgment requires a standard more flexible and less strict than the standard required for a finding of liability. ''[A] proposed decree must be approved even if it falls short of the remedy the court would impose on its own, as long as it falls within the range of acceptability or is 'within the reaches of public interest.' '' *United States* v. *American Tel. & Tel Co.,* 552 F. Supp. 131, 151 (D.D.C. 1982), aff'd sub nom., *Maryland* v. *United States,* 460 U.S. 1001 (1983)

---

[3] 119 Cong. Rec. 24598 (1973). *See United States* v. *Gilette Co.,* 406 F. Supp. 713, 715 (D. Mass. 1975). A ''public interest'' determination can be made properly on the basis of the Competitive Impact Statement and Response to Comments filed pursuant to the APPA. Although the APPA authorizes the use of additional procedures, 15 U.S.C. 16(f), those procedures are discretionary. A court need not invoke any of them unless it believes that the comments have raised significant issues and that further proceedings would aid the court in resolving those issues. *See* H.R. Rep. 93–1463, 93d Cong. 2d Sess. 8–9 (1974), *reprinted in* U.S.C.C.A.N. 6535, 6538.

[4] *Bechtel,* 648 F.2d at 666 (emphasis added); *see BNS,* 858 F.2d at 463; *United States* v. *National Broadcasting Co.,* 449 F. Supp. 1127, 1143 (C.D. Cal. 1978); *Gillette,* 406 F. Supp. at 716. *See also Microsoft,* 56 F.3d at 1461 (whether ''the remedies [obtained in the decree are] so inconsonant with the allegations charged as to fall outside of the 'reaches of the public interest.''').

(quoting *Gillette Co.,* 406 F. Supp. at 716); *United States* v. *Alcan Aluminum, Ltd.,* 605 F. Supp. 619, 622 (W.D. Ky. 1985).

Moreover, the court's role under the Tunney Act is limited to reviewing the remedy in relationship to the violations that the United States has alleged in its complaint, and does not authorize the court to ''construct [its] own hypothetical case and then evaluate the decree against that case.'' *Microsoft,* 56 F.3d at 1459. Since ''[t]he court's authority to review the decree depends entirely on the government's exercising its prosecutorial discretion by bringing a case in the first place,'' it follows that the court ''is only authorized to review the decree itself,'' and not to ''effectively redraft the complaint'' to inquire into other matters that the United States might have but did not pursue. *Id.*

VIII. Determinative Documents

There are no determinative materials or documents within the meaning of the APPA that were considered by the United States in formulating the proposed Final Judgment. Consequently, the United States has not attached any such materials to the proposed Final Judgment.

Respectfully submitted,
Joel I. Klein,
Assistant Attorney General.
A. Douglas Melamed,
Principal Deputy Assistant Attorney General.
Constance K. Robinson,
Director of Operations and Merger Enforcement.
Donald J. Russell,
Chief, Telecommunications Task Force.
Laury E. Bobbish,
Assistant Chief, Telecommunications Task Force.
Hillary B. Burchuk,
D.C. Bar #366755.
Lawrence M. Frankel,
D.C. Bar #441532
Cynthia R. Lewis,
Trial Attorneys, U.S. Department of Justice, Antitrust Division, Telecommunications Task Force, 1401 H Street, N.W., Suite 8000, Washington, D.C. 20530, (202) 514–5621.

Dated: August 30, 2000.

[FR Doc. 00–24085 Filed 9–19–00; 8:45 am]

BILLING CODE 4410–11–M

DEPARTMENT OF LABOR

Employment and Training Administration

Investigations Regarding Certifications of Eligibility To Apply for Worker Adjustment Assistance

Petitions have been filed with the Secretary of Labor under Section 221(a) of the Trade Act of 1974 (''the Act'') and are identified in the Appendix to this notice. Upon receipt of these petitions, the Director of the Division of Trade Adjustment Assistance, Employment and Training Administration, has instituted investigations pursuant to Section 221(a) of the Act.

The purpose of each of the investigations is to determine whether the workers are eligible to apply for adjustment assistance under Title II, Chapter 2, of the Act. The investigations will further relate, as appropriate, to the determination of the date on which total or partial separations began or threatened to begin and the subdivision of the firm involved.

The petitioners or any other persons showing a substantial interest in the subject matter of the investigations may request a public hearing, provided such request is filed in writing with the Director, Division of Trade Adjustment Assistance, at the address shown below, not later than October 2, 2000.

Interested persons are invited to submit written comments regarding the subject matter of the investigations to the Director, Division of Trade Adjustment Assistance, at the address shown below, not later than October 2, 2000.

The petitions filed in this case are available for inspection at the Office of the Director, Division of Trade Adjustment Assistance, Employment and Training Administration, U.S. Department of Labor, Room C–5311, 200 Constitution Avenue, N.W., Washington, D.C. 20210.

Signed at Washington, D.C. this 5th day of September, 2000.

Edward A. Tomchick,
Director, Division of Trade Adjustment Assistance.

Appendix—Petitions Instituted on 09/05/2000

TA–W	Subject Firm (petitioners)	Location	Date of petition	Product(s)
38,043	Freightliner LLC (IAM)	Portland, OR	08/22/2000	Trucks.
38,044	Louisiana Pacific (Wrks)	Hines, OR	08/17/2000	Engineered wood products.
38,045	Corus Tuscaloosa (Comp)	Tuscaloosa, AL	08/03/2000	Hot coiled rolled steel.
38,046	Paramount Headwear, Inc. (Comp).	Dexter, MO	08/25/2000	Headwear.
38,047	Rockwell Automation (IUE)	Euclid, OH	08/25/2000	Cabinets.
38,048	PL Garment Finishers (Comp)	McRae, GA	08/21/2000	Denim jeans.
38,049	Puget Plastics Corp (Comp)	Tualatin, OR	08/19/2000	Plastic molded parts.
38,050	Shipple Ronal, Inc. (Wrks)	Long Island, NY	08/21/2000	Speciality chemicals.
38,051	Burlington House Home (Comp)	Stokesdale, NC	08/21/2000	Comforters, bedskirts and pillow shams.
38,052	Pulaski Furniture, Plt #2 (wrks)	Martinsville, VA	08/22/2000	Curio cabinets.
38,053	Pillowtex Corp (Wrks)	Fieldale, VA	08/22/2000	Towels.
38,054	Merrimac Industries (Wrks)	West Caldwell, NJ	08/11/2000	Power dividers.
38,055	Natalie Knitting Mills (Wrks)	Chilhowie, VA	08/25/2000	Cotton sweaters.
38,056	Beaumont Neckwear, Inc. (Wrks).	New York, NY	08/22/2000	Neckties.
38,057	Corlair Corp. (Comp)	Piedmont, MO	08/24/2000	Vinyl zippered folders for autos.
38,058	Kountry Kreations (Wrks)	Towanda, PA	08/24/2000	Dry floral products.
38,059	Crown Vantage (Comp)	Parchment, MI	08/25/2000	Specialty papers.
38,060	Garden Grow Co. (The) (Comp)	Wilsonville, OR	08/17/2000	Flower and vegetables seed packets.
38,061	TRW (SVAA)	Danville, PA	08/23/2000	Engine valves.
38,062	Grant Geophysical Corp (Comp)	Houston, TX	08/08/2000	Seismic data.
38,063	International Lace (Comp)	Guttenberg, NJ	08/17/2000	Lace—embroidery.
38,064	UFE, Inc. (Wrks)	River Falls, WI	08/17/2000	Injection molding.

TA–W	Subject Firm (petitioners)	Location	Date of petition	Product(s)
38,065	It's Personnal (Wrks)	New York, NY	08/22/2000	Ladies' sportswear.

[FR Doc. 00–24153 Filed 9–19–00; 8:45 am]

BILLING CODE 4510–-30–M

DEPARTMENT OF LABOR

Employment and Training Administration

Investigations Regarding Certifications of Eligibility to Apply For Worker Adjustment Assistance

Petitions have been filed with the Secretary of Labor under Section 221 (a) of the Trade Act of 1974 (''the Act'') and are identified in the Appendix to this notice. Upon receipt of these petitions, the Director of the Division of Trade Adjustment Assistance, Employment and Training Administration, has instituted investigations pursuant to Section 221 (a) of the Act.

The purpose of each of the investigations is to determine whether the workers are eligible to apply for adjustment assistance under Title II, Chapter 2, of the Act. The investigations will further relate, as appropriate, to the determination of the date on which total or partial separations began or threatened to begin and the subdivision of the firm involved.

The petitioners or any other persons showing a substantial interest in the subject matter of the investigations may request a public hearing, provided such request is filed in writing with the Director, Division of Trade Adjustment Assistance, at the address shown below, not later than October 2, 2000.

Interested persons are invited to submit written comments regarding the subject matter of the investigations to the Director, Division of Trade Adjustment Assistance, at the address shown below, not later than October 2, 2000.

The petitions filed in this case are available for inspection at the Office of the Director, Division of Trade Adjustment Assistance, Employment and Training Administration, U.S. Department of Labor, Room C–5311, 200 Constitution Avenue, N.W., Washington, D.C. 20210.

Signed at Washington, D.C. this 28th of August, 2000.

Edward A. Tomchick,

Director, Division of Trade Adjustment Assistance.

Appendix—Petitions Instituted On 08/28/2000

TA–W	Subject firm (petitioners)	Location	Date of petition	Product(s)
38,001	Warner's Distribution (Wkrs)	Murfeesoboro, TN	08/12/2000	Ladies' intimate apparel.
38,002	Genlyte Thomas Group (IBEW)	Hopkinsville, KY	08/01/2000	Lighting fixtures.
38,003	Parker Seal Co. (Wkrs)	Berea, KY	08/11/2000	O-ring seals.
38,004	Duluth Engineering (Wkrs)	Duluth, MN	08/11/2000	Gearboxes, hoists drums.
38,005	Maxco Tech Designs (Co.)	Edgewater, NJ	08/07/2000	Embroidery.
38,006	Rohm and Haas Co. (Wkrs)	Philadelphia, PA	08/09/2000	Ion exchange resins.
38,007	Tredegar Corp. (IAM)	Manchester, IA	07/31/2000	Embossed diaper backsheet film.
38,008	Cytec Industries (Wkrs)	Wallingford, CT	08/18/2000	Molding compounds.
38,009	Roseburg Forest Products (Co.)	Roseburg, OR	08/16/2000	Ponderosa and sugar pine.
38,010	Key Tronic Corp. (Co.)	Spokane, WA	08/04/2000	Custom keyboards.
38,011	Santtony Wear LLC (Co.)	Rockingham, NC	08/08/2000	Ladies' undergarments.
38,012	Dunbrooke Sportswear (Wkrs)	Greenfield, MO	08/14/2000	Sports jackets.
38,013	Robert Bosch Corp. (UAW)	Hendersonville, TN	08/03/2000	Automobile air moving motors.
38,014	Bay Club Sportswear (UNITE)	Copiague, NY	08/15/2000	Bathing suits—beachwear.
38,015	Boyt Brands (Co.)	Bedford, IA	08/11/2000	Luggage.
38,016	Leoni Wiring System (Co.)	Tucson, AZ	08/10/2000	Cable products.
38,017	International Paper (Wkrs)	Monticello, AR	07/21/2000	Paper and poly bags.
38,018	Durango Apparel (Wkrs)	New York, NY	06/30/2000	Office—jeans, slacks and shorts.
38,019	West Mill Clothes (UNITE)	Woodside, NY	08/10/2000	Men's tuxedo jackets and pants.
38,020	A.O. Smith Electrical (Co.)	Gordonsville, TN	08/10/2000	Electrical motors.
38,021	Cardinal Shoe Corp (Co.)	Lawrence, MA	08/08/2000	Women's dress shoes.
38,022	Celanese Acetate (UNITE)	Rock Hill, SC	08/13/2000	Acetate filament and flake.
38,023	Martin Mills, Inc. (Co.)	St. Martinville, LA	08/08/2000	Tee shirts.
38,024	Alabama Structural Beams (UNITE).	Gadsden, AL	08/08/2000	Light steel I-beams.
38,025	Jenny Fashions (Co.)	Meriden, CT	07/25/2000	Women's apparel.
38,026	Holocroft, LLC (ISLU)	Livonia, MI	08/15/2000	Heat treating furnaces.
38,027	Great Lakes Chemical (Co.)	Laredo, TX	08/02/2000	Antimony oxide.
38,028	Playtex Apparel (Wkrs)	Newnan, GA	08/18/2000	Undergarments.
38,029	Trus Joist (Wkrs)	Eugene, OR	08/16/2000	Veneer.
38,030	Phoenix Medical Tech. (Wkrs)	Andrews, SC	08/17/2000	Disposable rubber and plastic gloves.
38,031	Wabash Automotive (Wkrs)	Fort Worth, TX	08/11/2000	Slip rings and carburators.
38,032	Harman JBL (Wkrs)	Northridge, CA	08/09/2000	Loudspeaker components, cabinets.
38,033	WTTC, Inc. (Wkrs)	Raymondville, TX	08/18/2000	Cut denim material.
38,034	Lucchese (Wkrs)	El Paso, TX	08/10/2000	Boots.
38,035	Stanley Tools (Wkrs)	Shaftsbury, VT	08/08/2000	Levels, chalk and chalklines.
38,036	Midwest Electric Products (Co.)	Mankato, MN	08/09/2000	Weatherproof electrical equipment.
38,037	AES Interconnects (Wkrs)	San Benito, TX	07/28/2000	Wire harnesses.

TA–W	Subject firm (petitioners)	Location	Date of petition	Product(s)
38,038	Gulford Mills, Inc (Co.)	Greensboro, NC	08/07/2000	Material for sleepwear and dresswear.
38,039	Tru Stitch Footwear (Co.)	Malone, NY	08/11/2000	Soft moccasin and boot style slippers.
38,040	Reynolds Metals (IAMAW)	Troutdale, OR	08/18/2000	Aluminum.
38,041	Harris Interactive (Wkrs)	Vestal, NY	08/08/2000	Market research surveys.
38,042	EL Footwear, LLC (Co.)	Franklin, TN	08/22/2000	Western and work boots.

[FR Doc. 00–24154 Filed 9–19–00; 8:45 am]

BILLING CODE 4510–30–M

DEPARTMENT OF LABOR

Employment and Training Administration

[NAFTA–03888]

Lear Corp., United Technologies, Automotive, Inc.; Mold and Die Shop, El Paso, TX; Amended Certification Regarding Eligibility To Apply for NAFTA-Transitional Adjustment Assistance

In accordance with Section 250(A), Subchapter D, Chapter 2, Title II, of the Trade Act of 1974 (19 USC 2273), the Department of Labor issued a Certification for NAFTA Transitional Adjustment Assistance on July 11, 2000, applicable to workers of Lear Corp., Mold and Die Shop, El Paso, Texas. The notice was published in the **Federal Register** on July 24, 2000 (65 FR 45621).

At the request of the State agency, the Department reviewed the certification for workers of the subject firm. The workers inspected, modified and assembled dies manufactured by outside vendors but used by the subject firm for crimping wire terminals. New information received from the company shows that on May 4, 1999, Lear Corp. purchased United Technologies Automotive, Inc. Information also shows that workers separated from employment at Lear Corp., Mold and Die Shop had their wages reported under a separate unemployment insurance (UI) tax account for United Technologies Automotive, Inc.

Accordingly, the Department is amending the certification to properly reflect this matter.

The intent of the Department's certification is to include all workers of Lear Corp., Mold and Die Shop, El Paso, Texas who were adversely affected by the shift of production to Mexico.

The amended notice applicable to NAFTA–03888 is hereby issued as follows:

All workers of Lear Corp., United Technologies Automotive, Inc., Mold and Die Shop, El Paso, Texas who became totally or partially separated from employment on or after April 21, 1999 through July 11, 2002 are eligible to apply for NAFTA–TAA under Section 250 of the Trade Act of 1974.

Signed at Washington, D.C. this 13th day of September, 2000.

Edward A. Tomchick,

Director, Division of Trade Adjustment Assistance.

[FR Doc. 00–24155 Filed 9–19–00; 8:45 am]

BILLING CODE 4510–30–M

LIBRARY OF CONGRESS

Copyright Office

[Docket No. 2000–7 CARP SD 96–98]

Ascertainment of Controversy for the 1996–1998 Satellite Royalty Funds

AGENCY: Copyright Office, Library of Congress.

ACTION: Notice with request for comments and notices of intention to participate.

SUMMARY: The Copyright Office of the Library of Congress directs all claimants to royalty fees collected under the section 119 statutory license in 1996, 1997 and 1998 to submit comments as to whether a Phase I or Phase II controversy exists as to the distribution of those fees, and a Notice of Intention to Participate in a royalty distribution proceeding.

DATES: Comments and Notices of Intent to Participate are due by October 10, 2000.

ADDRESSES: If sent by mail, an original and five copies of written comments and a Notice of Intention to Participate should be addressed to: Copyright Arbitration Royalty Panel (CARP), P.O. Box 70977, Southwest Station, Washington, D.C. 20024. If hand delivered, an original and five copies should be brought to: Office of the General Counsel, James Madison Memorial Building, Room 403, First and Independence Avenue, S.E, Washington, D.C. 20540.

FOR FURTHER INFORMATION CONTACT: David O. Carson, General Counsel, or Tanya M. Sandros, Senior Attorney, Copyright Arbitration Royalty Panels, P.O. Box 70977, Southwest Station, Washington, DC 20024. Telephone (202) 707–8380. Telefax: (202) 252–3423.

SUPPLEMENTARY INFORMATION: Each year satellite carriers submit royalties to the Copyright Office for the retransmission to their subscribers of over-the-air broadcast signals. 17 U.S.C. 119. These royalties are, in turn, distributed in one of two ways to copyright owners whose works were included in a retransmission of an over-the-air broadcast signal and who timely filed a claim for royalties with the Copyright Office. The copyright owners may either negotiate the terms of a settlement as to the division of the royalty funds, or the Librarian of Congress may convene a Copyright Arbitration Royalty Panel (''CARP'') to determine the distribution of the royalty fees that remain in controversy. *See* 17 U.S.C. chapter 8.

During the pendency of any proceeding, however, the Librarian of Congress may distribute any amounts that are not in controversy, provided that sufficient funds are withheld to cover reasonable administrative costs and to satisfy all claims with respect to which a controversy exists under his authority set forth in section 119(b)(4)(C) of the Copyright Act, title 17 of the United States Code. *See, e.g.,* Order, Docket No. 97–1 CARP SD 92–95 (dated July 20, 1999).

On September 15, 2000, representatives of the Phase I claimant categories to which royalties have been allocated in prior satellite distribution proceedings filed a motion with the Copyright Office for a partial distribution of 75% of the 1996–1998 satellite royalty funds. The Office will consider this motion after all interested parties have been identified by filing the Notices of Intention requested herein and have had an opportunity to file responses to the motion.

1. Comments on the Existence of Controversies

Before commencing a distribution proceeding or making a partial distribution, the Librarian of Congress must first ascertain whether a

controversy exists as to the distribution of the royalty funds and the extent of those controversies. 17 U.S.C. 803(d). Therefore, the Copyright Office is requesting comment on the existence and extent of any controversies, at Phase I and Phase II, as to the distribution of the 1996–1998 satellite funds.

In Phase I of a satellite royalty distribution, royalties are distributed to certain categories of broadcast programming that has been retransmitted by satellite carriers. The categories have traditionally been syndicated programming and movies, sports, commercial and nonommerical broadcaster-owned programing, religious programming, and music programming. We seek comments as to controversies between these categories for royalty distribution.

In Phase II of a satellite royalty distribution, royalties are distributed to claimants within a program category. If a claimant anticipates a Phase II controversy, the claimant must state each program category in which he or she has an interest that has not, by the end of the comment period, been satisfied through a settlement agreement.

The Copyright Office must be advised of all Phase I and Phase II controversies and the extent of those controversies by the end of the comment period. We will not consider any controversies that come to our attention after the close of that period.

2. Notice of Intention To Participate

Those parties who have not settled their claims to the 1996–1998 satellite royalty funds and who wish to participate in a CARP proceeding, either at Phase I or Phase II, to resolve the distribution must file a Notice of Intent to Participate. Notices of Intent to Participate are due no later than October 10, 2000. Failure to file a timely Notice of Intent to Participate may preclude a claimant or claimants from participating in a CARP proceeding.

Section 251.45(a) of the rules, 37 C.F.R, requires that a Notice of Intent to Participate must be filed in order to participate in a CARP proceeding, but it does not prescribe the contents of the Notice. Recently, in another proceeding, the Library has been forced to address the issue of what constitutes a sufficient Notice and to whom it is applicable. *See* Orders in Docket No. 2002–2 CARP CD 93–97 (June 22, 2000, and August 1, 2000); *see also* 65 FR 54077 (September 6, 2000). These rulings will result in a future amendment to § 251.45(a) to specify the content of a properly filed Notice. In the meantime, the Office advises those parties filing Notices of Intent to Participate in this proceeding to comply with following instructions.

Each claimant that has a dispute over the distribution of the 1996–1998 satellite royalty funds, either at Phase I or Phase II, shall file a Notice of Intent to Participate that contains the following: (1) the claimant's full name, address, telephone number, and facsimile number (if any); (2) identification of whether the Notice covers a Phase I proceeding, a Phase II proceeding, or both; and (3) a statement of the claimant's intention to fully participate in a CARP proceeding.

Claimants may, in lieu of individual Notices of Intent to Participate, submit joint Notices. In lieu of the requirement that the notice contain the claimant's name, address, telephone number and facsimile number, a joint notice shall provide the full name, address, telephone number, and facsimile number (if any) of the person filing the notice and it shall contain a list identifying all the claimants that are parties to the joint Notice. In addition, if the joint Notice is filed by counsel or a representative of one or more of the claimants identified in the joint Notice, the joint Notice shall contain a statement from such counsel or representative certifying that, as of the date of submission of the joint Notice, such counsel or representative has the authority and consent of the claimants to represent them in the CARP proceeding.

3. Motion of Phase I Claimants for Partial Distribution

A claimant who is not a party to the motion, but who files a Notice of Intention to Participate, may file a response to the motion no later than the due date set forth in this Notice for comments on the existence of controversies and the Notice of Intent to Participate. The Motion of Phase I Claimants for Partial Distribution is available for copying in the Office of the General Counsel and may be found on the Copyright Office website at *http://www.loc.gov./copyright/carp/satellitepetition.pdf.*

Dated: September 18, 2000.

David O. Carson,

General Counsel.

[FR Doc. 00–24305 Filed 9–19–00; 8:45 am]

BILLING CODE 1410–33–M

NATIONAL AERONAUTICS AND SPACE ADMINISTRATION

[Notice 00–113]

Government-Owned Inventions, Available for Licensing

AGENCY: National Aeronautics and Space Administration.

ACTION: Notice of Availability of Inventions for Licensing.

SUMMARY: The inventions listed below are assigned to the National Aeronautics and Space Administration, have been filed in the United States Patent and Trademark Office, and are available for licensing.

DATES: September 20, 2000.

FOR FURTHER INFORMATION CONTACT: Robert M. Padilla, Patent Counsel, Ames Research Center, Mail Code 202A–3, Moffett Field, CA 94035; telephone (650) 604–5104; fax (650) 604–1592.

NASA Case No. ARC–14254–1SB: Waterproofing of Low Density Aerogels;

NASA Case No. ARC–14418–1GE: En Route Spacing System and Method;

NASA Case No. ARC–14494–1GE: Characterization of Bioelectric Potentials.

Dated: September 13, 2000.

Edward A. Frankle,

General Counsel.

[FR Doc. 00–24138 Filed 9–19–00; 8:45 am]

BILLING CODE 7510–01–P

NATIONAL SCIENCE FOUNDATION

Sunshine Act Meeting

AGENCY HOLDING MEETING: National Science Foundation, National Science Board Executive Committee.

DATE AND TIME: September 27, 2000, 2 p.m.–3:30 p.m. Closed Session.

PLACE: The National Science Foundation, 4201 Wilson Boulevard, Room 1205, Arlington, VA 22230.

STATUS: This meeting will be closed to the public.

MATTERS TO BE CONSIDERED: Closed Session (2 p.m. to 3:30 p.m.)

NSF FY 2002 Budget

NSF/OIG FY 2002 Budget

Marta Cehelsky,

Executive Officer.

[FR Doc. 00–24326 Filed 9–18–00; 3:40 pm]

BILLING CODE 7555–01–M

NUCLEAR REGULATORY COMMISSION

[Docket No. 50–483]

Union Electric Company; Notice of Consideration of Issuance of Amendment to Facility Operating License, Proposed No Significant Hazards Consideration Determination, and Opportunity for a Hearing

The U.S. Nuclear Regulatory Commission (the Commission) is considering issuance of an amendment to Facility Operating License No. NPF–30 issued to Union Electric Company (the licensee) for operation of the Callaway Plant, Unit 1 (Callaway) located in Callaway County, Missouri.

The proposed amendment request would revise the technical specifications (TS) to annotate the frequency for Surveillance Requirement (SR) 3.5.2.5 that verification of the automatic closure function of the residual heat removal (RHR) pump suction Valve BNHV8812A shall be performed prior to startup from the first shutdown to MODE 5 occurring after September 8, 2000, but no later than June 1, 2001.

In the application for the exigent amendment, the licensee stated that SR 3.5.2.5 requires that on an 18-month frequency each ECCS automatic valve in the flow path that is not locked, sealed, or otherwise secured in position, be tested to show that it will actuate to its correct position on an actual or simulated actuation signal. However, it was not previously recognized by the licensee that the surveillance should include subsequent valve actuations that are dependent on separate valves' position switch interlocks. Since Valve BNHV8812A does not actuate via a slave relay(s), it was not recognized by the licensee as being covered by this surveillance requirement. Therefore, the automatic closure of Valve BNHV8812A was not included in the plant's technical specification surveillance procedures. However, the automatic closure function of the valve has been previously tested, but not within the 18-month interval required by SR 3.5.2.5. Since the valve should not be tested during power operation, the licensee requested that the NRC exercise discretion not to enforce compliance with Technical Specification 3.5.2, in that SR 3.5.2.5 has not been currently performed for the automatic closure function of Valve BNHV8812A within the specified 18-month surveillance interval, and that plant operation be allowed to continue until the proper plant conditions exist to test the valve. The licensee was granted enforcement discretion on September 8, 2000, as documented in the staff's letter dated September 11, 2000, in that the staff will not enforce compliance with the action statements of SR 3.5.2.5 because of the failure to test the automatic closure function of Valve BNHV8812A as required by the SR. This enforcement discretion will expire when either (1) the automatic closure function of Valve BNHV8812A is tested at the next plant shutdown to Mode 5 or, (2) the exigent amendment request is acted upon.

The exigent amendment request is in support of the granted enforcement discretion and would allow the licensee to defer testing of the automatic closure function of the valve until the first proper plant conditions exist to test the valve. The testing would be at the first shutdown to MODE 5 occurring after September 8, 2000, but no later than June 1, 2001. Callaway is scheduled to have a refueling outage in Spring 2001.

Before issuance of the proposed license amendment, the Commission will have made findings required by the Atomic Energy Act of 1954, as amended (the Act) and the Commission's regulations.

Pursuant to 10 CFR 50.91(a)(6) for amendments to be granted under exigent circumstances, the NRC staff must determine that the amendment request involves no significant hazards consideration. Under the Commission's regulations in 10 CFR 50.92, this means that operation of the facility in accordance with the proposed amendment would not (1) involve a significant increase in the probability or consequences of an accident previously evaluated; or (2) create the possibility of a new or different kind of accident from any accident previously evaluated; or (3) involve a significant reduction in a margin of safety. As required by 10 CFR 50.91(a), the licensee has provided its analysis of the issue of no significant hazards consideration, which is presented below:

1. The proposed amendment does not involve a significant increase in the probability or consequences of an accident previously evaluated.

Overall protection system performance will remain within the bounds of the previously performed accident analyses since there are no hardware changes. The Reactor Trip System (RTS) and Engineered Safety Feature Actuation System (ESFAS) instrumentation will be unaffected. These protection systems will continue to function in a manner consistent with the plant design basis. All design, material, and construction standards that were applicable prior to the request are maintained.

The proposed request will not affect the probability of any event initiators. There will be no degradation in the performance of, or an increase in the number of challenges imposed on, safety-related equipment assumed to function during an accident situation. There will be no change to normal plant operating parameters or accident mitigation performance.

The proposed request will not alter any assumptions or change any mitigation actions in the radiological consequence evaluations in the FSAR.

Therefore, the proposed change does not involve a significant increase in the probability or consequences of an accident previously evaluated.

2. The proposed amendment does not create the possibility of a new or different kind of accident from any previously evaluated.

There are no hardware changes nor are there any changes in the method by which any safety-related plant system performs its safety function. This request will not affect the normal method of plant operation. No performance requirements will be affected.

No new accident scenarios, transient precursors, failure mechanisms, or limiting single failures are introduced as a result of this request. There will be no adverse effect or challenges imposed on any safety-related system as a result of this request.

This request does not alter the design or performance of the 7300 Process Protection System, Nuclear Instrumentation System, or Solid State Protection System used in the plant protection systems.

Therefore, the proposed request does not create the possibility of a new or different kind of accident from any previously evaluated.

3. The proposed amendment does not involve a significant reduction in a margin of safety.

There will be no effect on the manner in which safety limits or limiting safety system settings are determined nor will there be any effect on those plant systems necessary to assure the accomplishment of protection functions. There will be no impact on the overpower limit, departure from nucleate boiling ratio (DNBR) limits, heat flux hot channel factor (F_Q), nuclear enthalpy rise hot channel factor ($F\Delta H$), loss of coolant accident peak cladding temperature (LOCA PCT), peak local power density, or any other margin of safety. The radiological dose consequence acceptance criteria listed in the Standard Review Plan will continue to be met.

Therefore, the proposed request does not involve a significant reduction in any margin of safety.

The NRC staff has reviewed the licensee's analysis and, based on this review, it appears that the three standards of 10 CFR 50.92(c) are satisfied. Therefore, the NRC staff proposes to determine that the amendment request involves no significant hazards consideration.

The Commission is seeking public comments on this proposed determination. Any comments received within 14 days after the date of publication of this notice will be considered in making any final determination.

Normally, the Commission will not issue the amendment until the expiration of the 14-day notice period. However, should circumstances change during the notice period, such that failure to act in a timely way would result, for example, in derating or shutdown of the facility, the Commission may issue the license amendment before the expiration of the 14-day notice period, provided that its final determination is that the amendment involves no significant hazards consideration. The final determination will consider all public and State comments received. Should the Commission take this action, it will publish in the **Federal Register** a notice of issuance. The Commission expects that the need to take this action will occur very infrequently.

Written comments may be submitted by mail to the Chief, Rules and Directives Branch, Division of Administrative Services, Office of Administration, U.S. Nuclear Regulatory Commission, Washington, DC 20555–0001, and should cite the publication date and page number of this **Federal Register** notice. Written comments may also be delivered to Room 6D59, Two White Flint North, 11545 Rockville Pike, Rockville, Maryland, from 7:30 a.m. to 4:15 p.m. Federal workdays. Copies of written comments received may be examined at the NRC Public Document Room, the Gelman Building, 2120 L Street, NW., Washington, DC.

The filing of requests for hearing and petitions for leave to intervene is discussed below.

By October 20, 2000, the licensee may file a request for a hearing with respect to issuance of the amendment to the subject facility operating license and any person whose interest may be affected by this proceeding and who wishes to participate as a party in the proceeding must file a written request for a hearing and a petition for leave to intervene. Requests for a hearing and a petition for leave to intervene shall be filed in accordance with the Commission's ''Rules of Practice for Domestic Licensing Proceedings'' in 10 CFR Part 2. Interested persons should consult a current copy of 10 CFR 2.714 which is available at the Commission's Public Document Room, the Gelman Building, 2120 L Street, NW., Washington, DC, and accessible electronically through the ADAMS Public Electronic Reading Room link at the NRC Web site (http://www.nrc.gov). If a request for a hearing or petition for leave to intervene is filed by the above date, the Commission or an Atomic Safety and Licensing Board, designated by the Commission or by the Chairman of the Atomic Safety and Licensing Board Panel, will rule on the request and/or petition; and the Secretary or the designated Atomic Safety and Licensing Board will issue a notice of hearing or an appropriate order.

As required by 10 CFR 2.714, a petition for leave to intervene shall set forth with particularity the interest of the petitioner in the proceeding, and how that interest may be affected by the results of the proceeding. The petition should specifically explain the reasons why intervention should be permitted with particular reference to the following factors: (1) the nature of the petitioner's right under the Act to be made a party to the proceeding; (2) the nature and extent of the petitioner's property, financial, or other interest in the proceeding; and (3) the possible effect of any order which may be entered in the proceeding on the petitioner's interest. The petition should also identify the specific aspect(s) of the subject matter of the proceeding as to which petitioner wishes to intervene. Any person who has filed a petition for leave to intervene or who has been admitted as a party may amend the petition without requesting leave of the Board up to 15 days prior to the first prehearing conference scheduled in the proceeding, but such an amended petition must satisfy the specificity requirements described above.

Not later than 15 days prior to the first prehearing conference scheduled in the proceeding, a petitioner shall file a supplement to the petition to intervene which must include a list of the contentions which are sought to be litigated in the matter. Each contention must consist of a specific statement of the issue of law or fact to be raised or controverted. In addition, the petitioner shall provide a brief explanation of the bases of the contention and a concise statement of the alleged facts or expert opinion which support the contention and on which the petitioner intends to rely in proving the contention at the hearing. The petitioner must also provide references to those specific sources and documents of which the petitioner is aware and on which the petitioner intends to rely to establish those facts or expert opinion. Petitioner must provide sufficient information to show that a genuine dispute exists with the applicant on a material issue of law or fact. Contentions shall be limited to matters within the scope of the amendment under consideration. The contention must be one which, if proven, would entitle the petitioner to relief. A petitioner who fails to file such a supplement which satisfies these requirements with respect to at least one contention will not be permitted to participate as a party.

Those permitted to intervene become parties to the proceeding, subject to any limitations in the order granting leave to intervene, and have the opportunity to participate fully in the conduct of the hearing, including the opportunity to present evidence and cross-examine witnesses.

If the amendment is issued before the expiration of the 30-day hearing period, the Commission will make a final determination on the issue of no significant hazards consideration. If a hearing is requested, the final determination will serve to decide when the hearing is held.

If the final determination is that the amendment request involves no significant hazards consideration, the Commission may issue the amendment and make it immediately effective, notwithstanding the request for a hearing. Any hearing held would take place after issuance of the amendment.

If the final determination is that the amendment request involves a significant hazards consideration, any hearing held would take place before the issuance of any amendment.

A request for a hearing or a petition for leave to intervene must be filed with the Secretary of the Commission, U.S. Nuclear Regulatory Commission, Washington, DC 20555–0001, Attention: Rulemakings and Adjudications Staff, or may be delivered to the Commission's Public Document Room, the Gelman Building, 2120 L Street, NW., Washington, DC, by the above date. A copy of the petition should also be sent to the Office of the General Counsel, U.S. Nuclear Regulatory Commission, Washington, DC 20555–0001, and to John O'Neill, Esq., Shaw, Pittman, Potts and Trowbridge, 2300 N Street, N.W., Washington, D.C. 20037, attorney for the licensee.

Nontimely filings of petitions for leave to intervene, amended petitions, supplemental petitions and/or requests for hearing will not be entertained absent a determination by the Commission, the presiding officer or the presiding Atomic Safety and Licensing Board that the petition and/or request should be granted based upon a balancing of the factors specified in 10 CFR 2.714(a)(1)(i)–(v) and 2.714(d).

For further details with respect to this action, see the application for amendment dated September 8, 2000, which is available for public inspection at the Commission's Public Document Room, the Gelman Building, 2120 L Street, NW., Washington, DC, and accessible electronically through the ADAMS Public Electronic Reading

Room link at the NRC Web site (http://www.nrc.gov).

Dated at Rockville, Maryland, this 14th day of September 2000.

For the Nuclear Regulatory Commission.

Girija S. Shukla,

Project Manager, Section 2, Project Directorate IV and Decommissioning Division of Licensing Project Management Office of Nuclear Reactor Regulation.

[FR Doc. 00–24162 Filed 9–19–00; 8:45 am]

BILLING CODE 7590–01–P

NUCLEAR REGULATORY COMMISSION

Advisory Committee on Reactor Safeguards, Meeting of the Ad Hoc Subcommittee; Notice of Meeting

The Ad Hoc Subcommittee will hold a meeting on October 10–13, 2000, Room T–2B3, 11545 Rockville Pike, Rockville, Maryland.

The entire meeting will be open to public attendance.

The agenda for the subject meeting shall be as follows:

Tuesday, October 10, 2000—1:00 p.m. until the conclusion of business

The Ad Hoc Subcommittee will discuss its approach for reviewing the technical merits of the Differing Professional Opinion (DPO) issues associated with steam generator tube integrity, and developing comments and recommendations for consideration by the full Committee.

Wednesday, October 11, 2000—8:30 a.m. until the conclusion of business

The Ad Hoc Subcommittee will hear presentations by and hold discussions with the DPO author and other interested persons regarding the DPO issues, views on the adequacy of the staff's approach for resolving these issues, and remaining major issues of contention.

Thursday, October 12, 2000—8:30 a.m. until the conclusion of business

The Ad Hoc Subcommittee will hear presentations by and hold discussions with representatives of the NRC staff and other interested persons regarding the status of resolution of the DPO issues and related matters.

Friday, October 13, 2000—8:30 a.m. until the conclusion of business

The Ad Hoc Subcommittee will continue its discussion of the DPO issues with the staff and the DPO author, as needed, and will develop proposed comments and recommendations for consideration by the full Committee.

The purpose of this meeting is to gather information, analyze relevant issues and facts, and to formulate proposed positions and actions, as appropriate, for deliberation by the full Committee.

Oral statements may be presented by members of the public with the concurrence of the Subcommittee Chairman; written statements will be accepted and made available to the Committee. Electronic recordings will be permitted only during those portions of the meeting that are open to the public, and questions may be asked only by members of the Ad Hoc Subcommittee, its consultants, and staff. Persons desiring to make oral statements should notify the cognizant ACRS staff engineers named below five days prior to the meeting, if possible, so that appropriate arrangements can be made.

During the initial portion of the meeting, the Ad Hoc Subcommittee, along with any of its consultants who may be present, may exchange preliminary views regarding matters to be considered during the balance of the meeting.

The Ad Hoc Subcommittee will then hear presentations by and hold discussions with the DPO author, representatives of the NRC staff, and other interested persons regarding this review.

Further information regarding topics to be discussed, whether the meeting has been canceled or rescheduled, and the Chairman's ruling on requests for the opportunity to present oral statements and the time allotted therefor can be obtained by contacting either Mr. Sam Duraiswamy (telephone 301–415–7364) or Ms. Undine Shoop (telephone 301–415–8086) between 7:30 a.m. and 4:15 p.m. (EDT). Persons planning to attend this meeting are urged to contact the above named individuals one or two working days prior to the meeting to be advised of any potential changes to the agenda, etc., that may have occurred.

Dated: September 12, 2000.

James E. Lyons,

Associate Director for Technical Support, ACRS/ACNW.

[FR Doc. 00–24159 Filed 9–19–00; 8:45 am]

BILLING CODE 7590–01–P

NUCLEAR REGULATORY COMMISSION

Advisory Committee on Reactor Safeguards; Meeting Notice

In accordance with the purposes of Sections 29 and 182b. of the Atomic Energy Act (42 U.S.C. 2039, 2232b), the Advisory Committee on Reactor Safeguards will hold a meeting on October 5–7, 2000, in Conference Room T–2B3, 11545 Rockville Pike, Rockville, Maryland. The date of this meeting was previously published in the **Federal Register** on Thursday, October 14, 1999 (64 FR 55787).

Thursday, October 5, 2000

8:30 A.M.–8:45 A.M.: Opening Remarks by the ACRS Chairman (Open)—The ACRS Chairman will make opening remarks regarding the conduct of the meeting.

8:45 A.M.–10:00 A.M.: Discussion of Union of Concerned Scientists Report, ''Nuclear Plant Risk Studies: Failing the Grade'' (Open)—The Committee will hear presentations by and hold discussions with representatives of the Union of Concerned Scientists (UCS), the NRC staff, and other interested parties concerning the August 2000 UCS report on nuclear plant risk studies.

10:15 A.M.–11:30 A.M.: NEI 00–02, ''Industry PRA Peer Review Process Guidelines'' (Open)—The Committee will hear presentations by and hold discussions with representatives of the Nuclear Energy Institute (NEI) and the NRC staff regarding the proposed industry PRA certification guidelines described in the document NEI 00–02.

11:30 A.M.–12:30 P.M.: Staff Views on ASME Standard for PRA for Nuclear Power Plant Applications (Open)—The Committee will hear presentations by and hold discussions with representatives of the NRC staff regarding the staff's August 14, 2000 response to the American Society of Mechanical Engineers (ASME) draft Revision 12 ASME Standard for Probabilistic Risk Assessment for Nuclear Power Plant Applications.

1:30 P.M.–3:00 P.M.: Pressurized Thermal Shock Technical Bases Reevaluation Project (Open)—The Committee will hear presentations by and hold discussions with representatives of the NRC staff regarding the pressurized thermal shock technical bases reevaluation project.

3:30 P.M.–4:30 P.M.: Break and Preparation of Draft ACRS Reports (Open)—Cognizant ACRS members will prepare draft reports, as needed, for consideration by the full Committee.

4:30 P.M.–6:00 P.M.: Discussion of Proposed ACRS Reports (Open)—The Committee will discuss proposed ACRS reports on matters considered during this meeting.

6:00 P.M.–7:00 P.M.: Discussion of Topics for Meeting with the NRC Commissioners (Open)—The Committee will discuss issues associated with risk

informing 10 CFR 50, quality of PRAs, spent fuel pool fire safety study, more realistic (best estimate) thermal-hydraulic codes and status of ACRS activities on license renewals.

Friday, October 6, 2000

8:30 A.M.–8:35 A.M.: Opening Remarks by the ACRS Chairman (Open)—The ACRS Chairman will make opening remarks regarding the conduct of the meeting.

8:35 A.M.–9:15 A.M.: Discussion of Topics for Meeting with the NRC Commissioners (Open)—The Committee will discuss matters scheduled for the meeting with the NRC Commissioners associated with risk informing 10 CFR 50 and related matters.

9:30 A.M.–12:00 Noon: Meeting with the NRC Commissioners (Open)—The Committee will meet with the NRC Commissioners, Commissioners' Conference Room, One White Flint North to discuss risk informing 10 CFR 50 and related matters.

1:30 P.M.–3:00 P.M.: Discussion of Industry Issues (Open)—The Committee will hear a presentation by R. Beedle, Senior Vice President, NEI on issues of mutual interest.

3:15 P.M.–4:45 P.M.: GSI–168, Equipment Qualification (Open)—The Committee will hear presentations by and hold discussions with representatives of the NRC staff regarding the GSI–168, Equipment Qualification.

4:45 P.M.–5:30 P.M.: ACRS Review of Generic Guidance Documents Associated with License Renewal (Open)—The Committee will discuss concerns identified during their initial review of the draft guidance documents.

5:30 P.M.–5:50 P.M.: Future ACRS Activities/Report of the Planning and Procedures Subcommittee (Open)—The Committee will discuss the recommendations of the Planning and Procedures Subcommittee regarding items proposed for consideration by the full Committee during future meetings. Also, it will hear a report of the Planning and Procedures Subcommittee on matters related to the conduct of ACRS business, and organizational and personnel matters relating to the ACRS.

5:50 P.M.–6:00 P.M.: Reconciliation of ACRS Comments and Recommendations (Open)—The Committee will discuss the responses from the NRC Executive Director for Operations (EDO) to comments and recommendations included in recent ACRS reports and letters. The EDO responses are expected to be made available to the Committee prior to the meeting.

6:00 P.M.–6:30 P.M.: Break and Preparation of Draft ACRS Reports (Open)—Cognizant ACRS members will prepare draft reports, as needed, for consideration by the full Committee.

6:30 P.M.–7:30 P.M.: Discussion of Proposed ACRS Reports (Open)—The Committee will discuss proposed ACRS reports.

Saturday, October 7, 2000

8:30 A.M.–8:35 A.M.: Opening Remarks by the ACRS Chairman (Open)—The ACRS Chairman will make opening remarks regarding the conduct of the meeting.

8:35 A.M.–12:30 P.M.: Discussion of Proposed ACRS Reports (Open)—The Committee will continue its discussion of proposed ACRS reports.

12:30 P.M.–1 P.M.: Annual Report to the Commission on the NRC Safety Research Program (Open)—The Committee will discuss the format and content of the annual ACRS report to the Commission on the NRC Safety Research Program.

1 P.M.–1:30 P.M.: Miscellaneous (Open)—The Committee will discuss matters related to the conduct of Committee activities and matters and specific issues that were not completed during previous meetings, as time and availability of information permit.

Procedures for the conduct of and participation in ACRS meetings were published in the **Federal Register** on September 28, 1999 (64 FR 52353). In accordance with these procedures, oral or written views may be presented by members of the public, including representatives of the nuclear industry. Electronic recordings will be permitted only during the open portions of the meeting and questions may be asked only by members of the Committee, its consultants, and staff. Persons desiring to make oral statements should notify Mr. James E. Lyons, ACRS, five days before the meeting, if possible, so that appropriate arrangements can be made to allow necessary time during the meeting for such statements. Use of still, motion picture, and television cameras during the meeting may be limited to selected portions of the meeting as determined by the Chairman. Information regarding the time to be set aside for this purpose may be obtained by contacting Mr. James E. Lyons prior to the meeting. In view of the possibility that the schedule for ACRS meetings may be adjusted by the Chairman as necessary to facilitate the conduct of the meeting, persons planning to attend should check with Mr. James E. Lyons if such rescheduling would result in major inconvenience.

Further information regarding topics to be discussed, whether the meeting has been canceled or rescheduled, the Chairman's ruling on requests for the opportunity to present oral statements, and the time allotted therefor can be obtained by contacting Mr. James E. Lyons (telephone 301–415–7371), between 7:30 a.m. and 4:15 p.m., EDT.

ACRS meeting agenda, meeting transcripts, and letter reports are available for downloading or viewing on the internet at http://www.nrc.gov/ACRSACNW.

Videoteleconferencing service is available for observing open sessions of ACRS meetings. Those wishing to use this service for observing ACRS meetings should contact Mr. Theron Brown, ACRS Audio Visual Technician (301–415–8066), between 7:30 a.m. and 3:45 p.m., EDT, at least 10 days before the meeting to ensure the availability of this service. Individuals or organizations requesting this service will be responsible for telephone line charges and for providing the equipment facilities that they use to establish the videoteleconferencing link. The availability of videoteleconferencing services is not guaranteed.

Dated: September 14, 2000.

Andrew L. Bates,

Advisory Committee Management Officer.

[FR Doc. 00–24160 Filed 9–19–00; 8:45 am]

BILLING CODE 7590–01–P

NUCLEAR REGULATORY COMMISSION

Biweekly Notice; Applications and Amendments to Facility Operating Licenses Involving No Significant Hazards Considerations

I. Background

Pursuant to Public Law 97–415, the U.S. Nuclear Regulatory Commission (the Commission or NRC staff) is publishing this regular biweekly notice. Public Law 97–415 revised section 189 of the Atomic Energy Act of 1954, as amended (the Act), to require the Commission to publish notice of any amendments issued, or proposed to be issued, under a new provision of section 189 of the Act. This provision grants the Commission the authority to issue and make immediately effective any amendment to an operating license upon a determination by the Commission that such amendment involves no significant hazards consideration, notwithstanding the pendency before the Commission of a request for a hearing from any person.

This biweekly notice includes all notices of amendments issued, or proposed to be issued from August 28, 2000, through September 8, 2000. The last biweekly notice was published on September 6, 2000 (65 FR 54083).

Notice of Consideration of Issuance of Amendments to Facility Operating Licenses, Proposed No Significant Hazards Consideration Determination, and Opportunity for a Hearing

The Commission has made a proposed determination that the following amendment requests involve no significant hazards consideration. Under the Commission's regulations in 10 CFR 50.92, this means that operation of the facility in accordance with the proposed amendment would not (1) involve a significant increase in the probability or consequences of an accident previously evaluated; or (2) create the possibility of a new or different kind of accident from any accident previously evaluated; or (3) involve a significant reduction in a margin of safety. The basis for this proposed determination for each amendment request is shown below.

The Commission is seeking public comments on this proposed determination. Any comments received within 30 days after the date of publication of this notice will be considered in making any final determination.

Normally, the Commission will not issue the amendment until the expiration of the 30-day notice period. However, should circumstances change during the notice period such that failure to act in a timely way would result, for example, in derating or shutdown of the facility, the Commission may issue the license amendment before the expiration of the 30-day notice period, provided that its final determination is that the amendment involves no significant hazards consideration. The final determination will consider all public and State comments received before action is taken. Should the Commission take this action, it will publish in the **Federal Register** a notice of issuance and provide for opportunity for a hearing after issuance. The Commission expects that the need to take this action will occur very infrequently.

Written comments may be submitted by mail to the Chief, Rules Review and Directives Branch, Division of Freedom of Information and Publications Services, Office of Administration, U.S. Nuclear Regulatory Commission, Washington, DC 20555–0001, and should cite the publication date and page number of this **Federal Register** notice. Written comments may also be delivered to Room 6D22, Two White Flint North, 11545 Rockville Pike, Rockville, Maryland from 7:30 a.m. to 4:15 p.m. Federal workdays. Copies of written comments received may be examined at the NRC's Public Document Room, the Gelman Building, 2120 L Street, NW., Washington, DC through September 22, 2000. The NRC is relocating its Public Document Room to the NRC's headquarters building. Effective September 26, 2000, documents may be examined at the NRC's Public Document Room, located at One White Flint North, 11555 Rockville Pike (first floor), Rockville, Maryland 20852. The filing of requests for a hearing and petitions for leave to intervene is discussed below.

By October 20, 2000, the licensee may file a request for a hearing with respect to issuance of the amendment to the subject facility operating license and any person whose interest may be affected by this proceeding and who wishes to participate as a party in the proceeding must file a written request for a hearing and a petition for leave to intervene. Requests for a hearing and a petition for leave to intervene shall be filed in accordance with the Commission's ''Rules of Practice for Domestic Licensing Proceedings'' in 10 CFR Part 2. Interested persons should consult a current copy of 10 CFR 2.714 which is available at the Commission's Public Document Room, the Gelman Building, 2120 L Street, NW., Washington, DC through September 22, 2000 or at One White Flint North, 11555 Rockville Pike (first floor), Rockville, Maryland 20852 effective September 26, 2000, and electronically from the ADAMS Public Library component on the NRC Web site, *http://www.nrc.gov* (the Electronic Reading Room). If a request for a hearing or petition for leave to intervene is filed by the above date, the Commission or an Atomic Safety and Licensing Board, designated by the Commission or by the Chairman of the Atomic Safety and Licensing Board Panel, will rule on the request and/or petition; and the Secretary or the designated Atomic Safety and Licensing Board will issue a notice of a hearing or an appropriate order.

As required by 10 CFR 2.714, a petition for leave to intervene shall set forth with particularity the interest of the petitioner in the proceeding, and how that interest may be affected by the results of the proceeding. The petition should specifically explain the reasons why intervention should be permitted with particular reference to the following factors: (1) The nature of the petitioner's right under the Act to be made a party to the proceeding; (2) the nature and extent of the petitioner's property, financial, or other interest in the proceeding; and (3) the possible effect of any order which may be entered in the proceeding on the petitioner's interest. The petition should also identify the specific aspect(s) of the subject matter of the proceeding as to which petitioner wishes to intervene. Any person who has filed a petition for leave to intervene or who has been admitted as a party may amend the petition without requesting leave of the Board up to 15 days prior to the first prehearing conference scheduled in the proceeding, but such an amended petition must satisfy the specificity requirements described above.

Not later than 15 days prior to the first prehearing conference scheduled in the proceeding, a petitioner shall file a supplement to the petition to intervene which must include a list of the contentions which are sought to be litigated in the matter. Each contention must consist of a specific statement of the issue of law or fact to be raised or controverted. In addition, the petitioner shall provide a brief explanation of the bases of the contention and a concise statement of the alleged facts or expert opinion which support the contention and on which the petitioner intends to rely in proving the contention at the hearing. The petitioner must also provide references to those specific sources and documents of which the petitioner is aware and on which the petitioner intends to rely to establish those facts or expert opinion. Petitioner must provide sufficient information to show that a genuine dispute exists with the applicant on a material issue of law or fact. Contentions shall be limited to matters within the scope of the amendment under consideration. The contention must be one which, if proven, would entitle the petitioner to relief. A petitioner who fails to file such a supplement which satisfies these requirements with respect to at least one contention will not be permitted to participate as a party.

Those permitted to intervene become parties to the proceeding, subject to any limitations in the order granting leave to intervene, and have the opportunity to participate fully in the conduct of the hearing, including the opportunity to present evidence and cross-examine witnesses.

If a hearing is requested, the Commission will make a final determination on the issue of no significant hazards consideration. The final determination will serve to decide when the hearing is held.

If the final determination is that the amendment request involves no significant hazards consideration, the Commission may issue the amendment and make it immediately effective, notwithstanding the request for a hearing. Any hearing held would take place after issuance of the amendment.

If the final determination is that the amendment request involves a significant hazards consideration, any hearing held would take place before the issuance of any amendment.

A request for a hearing or a petition for leave to intervene must be filed with the Secretary of the Commission, U.S. Nuclear Regulatory Commission, Washington, DC 20555–0001, Attention: Docketing and Services Branch, or may be delivered to the Commission's Public Document Room, the Gelman Building, 2120 L Street, NW., Washington DC through September 22, 2000 or at One White Flint North, 11555 Rockville Pike (first floor), Rockville, Maryland 20852 effective September 26, 2000, by the above date. A copy of the petition should also be sent to the Office of the General Counsel, U.S. Nuclear Regulatory Commission, Washington, DC 20555–0001, and to the attorney for the licensee.

Nontimely filings of petitions for leave to intervene, amended petitions, supplemental petitions and/or requests for a hearing will not be entertained absent a determination by the Commission, the presiding officer or the Atomic Safety and Licensing Board that the petition and/or request should be granted based upon a balancing of factors specified in 10 CFR 2.714(a)(1)(i)–(v) and 2.714(d).

For further details with respect to this action, see the application for amendment which is available for public inspection at the Commission's Public Document Room, the Gelman Building, 2120 L Street, NW., Washington, DC through September 22, 2000 or at One White Flint North, 11555 Rockville Pike (first floor), Rockville, Maryland 20852 effective September 26, 2000, and electronically from the ADAMS Public Library component on the NRC Web site, *http://www.nrc.gov* (the Electronic Reading Room).

Carolina Power & Light Company, et al., Docket Nos. 50–325 and 50-324, Brunswick Steam Electric Plant, Units 1 and 2, Brunswick County, North Carolina

Date of amendments request: July 27, 2000.

Description of amendments request: The proposed license amendments would revise Technical Specification (TS) 3.8.5, ''DC Sources—Shutdown.'' The operability requirements for the DC sources, during shutdown conditions, would be revised to require one of the unit's DC electrical power subsystems to be operable when in Modes 4 and 5 and during movement of irradiated fuel assemblies in the secondary containment.

Basis for proposed no significant hazards consideration determination: As required by 10 CFR 50.91(a), the licensee has provided its analysis of the issue of no significant hazards consideration, which is presented below:

In support of this determination, an evaluation of each of the three (3) standards set forth in 10 CFR 50.92 is provided below.

1. Revising the operability requirements for the DC sources, during shutdown conditions, to require one of the unit's DC electrical power subsystem to be operable when in Modes 4 and 5 and during movement of irradiated fuel assemblies in the secondary containment does not involve a significant increase in the probability or consequences of an accident previously evaluated.

The operability of the DC electrical power sources during Modes 4 and 5 and during movement of irradiated fuel assemblies in the secondary containment ensures that:

a. The facility can be maintained in the shutdown or refueling condition for extended periods;

b. Sufficient instrumentation and control capability is available for monitoring and maintaining the unit status; and

c. Adequate DC electrical power is provided to mitigate events postulated during shutdown, such as an inadvertent draindown of the vessel or a fuel handling accident.

As stated in TSTF–204, Revision 3, worst case design basis accidents which are analyzed for operating modes are not as significant of a concern during shutdown modes due to lower energy levels. The TSs, therefore, require a lesser complement of electrical equipment to be available during shutdown than is required during operating modes. Specifically, assuming a single failure concurrent with a loss of all offsite or all onsite power is not required. This concept is consistent with the BSEP TSs, prior to conversion to ITS [Improved TS], in that TS 3.8.2.4.2 required either Division I or Division II of the DC power distribution system to be operable when in Modes 4 and 5 and during movement of irradiated fuel assemblies in the secondary containment. The operability requirements of the DC electrical power sources for a unit in Modes 1, 2, and 3 are not affected by the proposed amendments.

Therefore, the proposed amendments do not involve a significant increase in the probability or consequences of an accident previously evaluated.

2. Revising the operability requirements for the DC sources, during shutdown conditions, to require one of the unit's DC electrical power subsystem to be operable when in Modes 4 and 5 and during movement of irradiated fuel assemblies in the secondary containment will not create the possibility of a new or different kind of accident from any accident previously evaluated.

Revising the operability requirements of TS 3.8.5 does not involve physical modification to the plant and does not introduce a new mode of operation. Therefore, there is no possibility of an accident of a new or different type.

3. Revising the operability requirements for the DC sources, during shutdown conditions, to require one of the unit's DC electrical power subsystem to be operable when in Modes 4 and 5 and during movement of irradiated fuel assemblies in the secondary containment does not involve a significant reduction in a margin of safety.

The proposed change revises LCO [Limiting Condition for Operation] 3.8.5 to require one of the unit's DC electrical power subsystems to be operable when the unit is in Modes 4 and 5 and during movement of irradiated fuel assemblies in the secondary containment. This is acceptable due to the lower energy levels involved with potential accidents occurring during shutdown modes and because assuming a single failure concurrent with a loss of all offsite or all onsite power during such events is not required. This is consistent with the TS requirements, as they existed prior to conversion to ITS and TSTF–204, Revision 3 which was approved by the NRC on February 16, 2000. The operability requirements of the DC electrical power sources for a unit in Modes 1, 2, and 3 are not affected by the proposed amendments.

Based on the above, the proposed amendments do not involve a significant reduction in a margin of safety.

The NRC staff has reviewed the licensee's analysis and, based on this review, it appears that the three standards of 10 CFR 50.92(c) are satisfied. Therefore, the NRC staff proposes to determine that the amendment request involves no significant hazards consideration.

Attorney for licensee: William D. Johnson, Vice President and Corporate Secretary, Carolina Power & Light Company, Post Office Box 1551, Raleigh, North Carolina 27602.

NRC Section Chief: Richard P. Correia.

Consolidated Edison Company of New York, Docket No. 50–247, Indian Point Nuclear Generating Unit No. 2, Westchester County, New York

Date of amendment request: August 22, 2000.

Description of amendment request: The proposed amendment would change: (1) Technical Specification (TS) 3.10.4, ''Rod Insertion Limits,'' to allow on-line calibration of the rod position indicator (RPI) channels during operating cycle 15, and (2) TS 3.10.6, ''Inoperable Rod Position Indicator Channels,'' to allow extended RPI deviation limits during cycle 15.

Basis for proposed no significant hazards consideration determination:

As required by 10 CFR 50.91(a), the licensee has provided its analysis of the issue of no significant hazards consideration, which is presented below:

1. Does the proposed license amendment involve a significant increase in the probability or in the consequences of an accident previously evaluated?

No. Neither the probability not the consequences of an accident previously analyzed is increased due to the proposed changes. All peaking factors will remain within the limits of the Technical Specifications. Both the shutdown margin and the axial flux difference will be maintained within the limits of the Technical Specifications. There will be no fuel damage due to the changes. All design and safety criteria will be met. Therefore, the proposed changes would not involve a significant increase in the probability or in the consequences of an accident previously evaluated.

2. Does the proposed amendment create the possibility of a new or different kind of accident from any accident previously evaluated?

No. The changes will not create the possibility of a new or different kind of accident. The calibration will be performed using plant procedures that have been reviewed and approved by Con Edison's Station Nuclear Safety Committee (SNSC). It has been shown that even with the new RPI deviation bands and on-line calibration, all power distribution limits will be met. Therefore, the proposed changes would not create the possibility of a new or different kind of accident from any accident previously evaluated.

3. Does the proposed amendment involve a significant reduction in a margin of safety?

No. The proposed amendment does not involve a significnat reduction in the margin of safety. There will be no change in the power distribution limits used in the design and safety analyses and the required shutdown margin will be maintained. It has been shown that there is no fuel failure as a result of this change. Therefore, the proposed changes do not involve a significant reduction in a margin of safety.

The NRC staff has reviewed the licensee's analysis and, based on this review, it appears that the three standards of 10 CFR 50.92(c) are satisfied. Therefore, the NRC staff proposes to determine that the amendment request involves no significant hazards consideration.

Attorney for licensee: Brent L. Brandenburg, Esq., 4 Irving Place, New York, New York 10003.

NRC Section Chief: Marsha Gamberoni.

Consumers Energy Company, Docket No. 50–255, Palisades Plant, Van Buren County, Michigan

Date of amendment request: August 28, 2000.

Description of amendment request: The proposed amendment would revise the date for implementation of the Palisades Plant Improved Technical Specifications (ITS) from on or before October 31, 2000, to on or before December 31, 2000. The current implementation date was established by previous Amendment No. 189, dated November 30, 1999, in which the NRC staff stated that Amendment No. 189 was ''effective as of its date of issuance and shall be implemented on or before October 31, 2000.'' The proposed amendment would change this date to December 31, 2000.

Basis for proposed no significant hazards consideration determination: As required by 10 CFR 50.91(a), the licensee has provided its analysis of the issue of no significant hazards consideration, which is presented below:

A discussion of these [10 CFR 50.92] standards as they relate to this request follows to show that operation of the facility in accordance with the proposed change does not:

(1) Involve a significant increase in the probability or consequences of an accident previously evaluated.

The proposed change is administrative in nature in that it simply extends the date for implementation of the Improved Technical Specifications (ITS) from October 31, 2000 to December 31, 2000. The proposed extension of the ITS implementation date is necessary in order to allow for additional Operations shift crew training and readiness assessment, as well as a longer transition period of operating the plant using the Current Technical Specifications (CTS) and ITS in parallel. These actions are considered essential to proper ITS implementation. Until ITS are implemented, the previously approved CTS will remain in effect and the unit will continue to be operated in accordance with the NRC approved CTS requirements.

The proposed change is administrative in nature, and does not involve any changes to the design or operation of the Palisades Plant which may affect the probability or consequences of an accident previously evaluated in the Updated Final Safety Analysis Report (UFSAR). Previously evaluated accident precursors or initiators are not affected and, as a result, the probability of accident initiation will remain as previously evaluated. There will be no impact on the capability of any structures, systems or components to perform their credited safety functions to prevent an accident or mitigate the consequences of an accident previously evaluated. Therefore, the probability or consequences of a postulated accident previously evaluated in the UFSAR are not increased as a result of the proposed change.

(2) Create the possibility of a new or different kind of accident from any accident previously evaluated.

Extension of the date for ITS implementation is an administrative change. The proposed change does not involve any changes to the physical structures, components, or systems of the Palisades Plant. Since the change is administrative, there will be no impact on the process variables, characteristics, or functional performance of any structures, systems or components in a manner that could create a new failure mode. Further, the change will not introduce any new modes of plant operation or eliminate any actions required to prevent or mitigate accidents. Thus, operation in accordance with the proposed change will not create the possibility of a new or different kind of accident from any accident previously evaluated.

(3) Involve a significant reduction in a margin of safety.

Extension of the date for ITS implementation is an administrative change. The proposed change does not involve any hardware changes or physical alteration of the plant and the change will have no impact on the design, design basis, or operation of the plant. The change will not eliminate any requirements, impose any new requirements, or alter any physical parameters which could reduce any margin of safety. The continued operation of Palisades in accordance with the previously approved Current Technical Specifications assures the proposed change will not involve a significant reduction in a margin of safety.

The NRC staff has reviewed the licensee's analysis and, based on this review, it appears that the three standards of 10 CFR 50.92(c) are satisfied. Therefore, the NRC staff proposes to determine that the amendment request involves no significant hazards consideration.

Attorney for licensee: Arunas T. Udrys, Esquire, Consumers Energy Company, 212 West Michigan Avenue, Jackson, Michigan 49201.

NRC Section Chief: Claudia M. Craig.

Duke Energy Corporation, Docket Nos. 50–269, 50–270, and 50–287, Oconee Nuclear Station, Units 1, 2, and 3, Oconee County, South Carolina

Date of amendment request: July 18, 2000, supplemented by letter dated August 22, 2000.

Description of amendment request: The proposed amendments would move Technical Specifications Sections 3.3.11, 3.3.12, and 3.3.13 (and the corresponding Bases) that specify the Main Steam Line Break requirements by renumbering them 3.3.25, 3.3.26, and 3.3.27 and indicating that these requirements will remain in effect for each unit until after the Automatic Feedwater Isolation System (AFIS) is installed on the unit. In addition, the proposed amendments would incorporate requirements and Bases for a new AFIS that will become effective when the modification is installed on each unit. These requirements will

become Sections 3.3.11, 3.3.12, and 3.3.13.

Basis for proposed no significant hazards consideration determination: As required by 10 CFR 50.91(a), the licensee has provided its analysis of the issue of no significant hazards consideration, which is presented below:

(1) Involve a significant increase in the probability or consequences of an accident previously evaluated:

No. There is no significant increase in the probability of a loss of Main Feedwater (MFW) or Emergency Feedwater (EFW) event due to spurious actuation of the Automatic Feedwater Isolation System (AFIS). AFIS provides a means of automatic response to improve the ability to isolate MFW and EFW to mitigate containment overpressurization and steam generator tube stresses resulting from Main Steam Line Break (MSLB) accidents. AFIS replaces the need for manual operator actions currently required by emergency operating procedures, but these remain as a defense-in-depth. AFIS is highly reliable, being designed with two independent trains of diverse digital control systems, each having four channels of inputs. The AFIS modification will also upgrade some existing components that were actuated by MSLB Detection and Feedwater (FDW) Isolation Circuitry that were not safety grade to safety grade quality thereby improving system reliability. Therefore, the installation of AFIS does not involve a significant increase in the probability or consequences of an accident previously evaluated.

(2) Create the possibility of a new or different kind of accident from any kind of accident previously evaluated:

No. AFIS replaces the MSLB Detection and FDW Isolation Circuitry as described in the Updated Final Safety Analysis Report. AFIS is capable of determining which steam generator has been affected and will isolate MFW and EFW to that steam generator. In this regard, AFIS performs the same functions that are currently performed by the combination of the MSLB Detection and FDW Isolation Circuitry plus the additional operator actions needed to isolate the affected steam generator. Safety features have been designed into AFIS to prevent spurious actuation. The system must be energized to trip therefore AFIS will not cause a trip on loss of power. There are no postulated failures such as loss of power that differ from those assumed for an analog control system that would prevent proper system actuation. The design of the two out of four input logic provides redundancy against the affects of single failures that could cause spurious actuation. In the unlikely event of spurious actuation, manual manipulation of EFW pump controls will override the AFIS trip signals. Therefore, AFIS does not introduce hardware failures that inhibit proper operation of MFW or EFW. In conclusion, AFIS does not create the possibility of a new or different kind of accident from any kind previously evaluated.

(3) Involve a significant reduction in a margin of safety.

No. The proposed change does not adversely affect any plant safety limits, setpoints, or design parameters. The change also does not adversely affect the fuel, fuel cladding, Reactor Coolant System, or containment integrity. For a postulated feedwater line break (FLB)/MSLB inside containment, AFIS will improve the margin of safety by reducing the mass and energy release to containment. AFIS will also improve the margin of safety for departure from nucleate boiling by minimizing the overcooling transient from a FLB/MSLB. Therefore, the proposed change does not involve a significant reduction in a margin of safety.

The NRC staff has reviewed the licensee's analysis and, based on this review, it appears that the three standards of 10 CFR 50.92(c) are satisfied. Therefore, the NRC staff proposes to determine that the amendment request involves no significant hazards consideration.

Attorney for licensee: Anne W. Cottington, Winston and Strawn, 1200 17th Street, NW., Washington, DC 20005.

NRC Section Chief: Richard L. Emch, Jr.

Entergy Operations, Inc., Docket No. 50–368, Arkansas Nuclear One, Unit No. 2, Pope County, Arkansas

Date of amendment request: August 10, 2000.

Description of amendment request: The proposed amendment would revise Technical Specification 3/4.9.4, ''Refueling Operations, Containment Building Penetrations,'' by deleting the requirements for the containment purge and exhaust system and by revising the closure requirements for containment building penetrations to require that containment penetrations are capable of being closed during the handling of irradiated fuel within the containment.

Basis for proposed no significant hazards consideration determination: As required by 10 CFR 50.91(a), the licensee has provided its analysis of the issue of no significant hazards consideration, which is presented below:

Criterion 1—Does Not Involve a Significant Increase in the Probability or Consequences of an Accident Previously Evaluated

The containment purge and exhaust system is not considered an accident initiator nor do the proposed changes result in any physical change to the plant design. Therefore the probability of an accident previously analyzed remains unchanged. In addition, the containment purge and exhaust system filtration units are not credited in the ANO–2 [Arkansas Nuclear One, Unit 2] safety analysis in limiting offsite dose consequences during an accident. Furthermore, the system is designed to automatically isolate, as required by ANO–2 TS [Technical Specification] 3.3.3.1, Table 3.3–6 upon receipt of a high radiation signal when in operation in Modes 5 and 6. Since the containment purge and exhaust system is credited only for long-term post accident cleanup efforts and will continue to be tested to ensure the filtration system remains effective in supporting such efforts, the consequences of an accident previously evaluated remains unchanged.

The opening of a containment penetration during the handling of irradiated fuel within the containment building is limited to Mode 6 with the core flooded to refueling level (≥ 23 feet of borated water above the fuel) by the applicability of TS 3.9.4. Such openings are strictly controlled by safe shutdown programs such as the ANO–2 Shutdown Operations Protection Plan (SOPP) and the Outage Risk Management Guidelines (ORMG). A containment penetration being open during the handling of irradiated fuel does not result in an increase in the probability of an accident that has been previously evaluated.

ANO [Arkansas Nuclear One] submitted the radiological dose consequences of a fuel handling accident within the containment building to the NRC [Nuclear Regulatory Commission], illustrating that without a containment building, the offsite dose consequences due to a fuel handling accident inside containment would remain well within 10 CFR 100 limits. This evaluation was approved by the NRC in Amendment 166 to the ANO–2 Operating License and referenced in the aforementioned Amendment 203 to the ANO–2 Operating License in support of allowing the equipment hatch and/or personnel air locks to remain open during fuel handling activities. Since the above evaluation assumes no credit for ''containment'' and subsequently illustrates that the resulting offsite dose consequences are acceptable, the consequences of an accident previously evaluated are not adversely impacted.

The proposed revision of penetration closure methods does not impact any accident previously analyzed or impact the consequences of such an accident. The licensee will continue to be accountable for ensuring adequate and timely closure of each containment penetration should such closure become necessary. Revising the examples given in the TSs for establishing closure is, therefore, considered risk-neutral and is consistent with the Revised Standard Technical Specifications (RSTS) of NUREG–1432.

Therefore, the proposed changes do *not* involve a significant increase in the probability or consequences of any accident previously evaluated.

Criterion 2—Does Not Create the Possibility of a New or Different Kind of Accident From Any Previously Evaluated

The containment purge and exhaust system filtration units are not credited in the ANO–2 safety analysis in limiting offsite dose consequences during an accident. Furthermore, the system is designed to automatically isolate, as required by ANO–2 TS 3.3.3.1, Table 3.3–6, upon receipt of a high radiation signal when in operation in Modes 5 and 6. Since the containment purge

and exhaust system is credited only for long-term post accident cleanup efforts and will continue to be tested to ensure the filtration system remains effective in supporting such efforts, the possibility of a new or different kind of accident being created from that previously evaluated remains unchanged.

The fuel handling accident has previously been addressed in the ANO–2 safety analysis. In addition, the offsite dose consequences of the fuel handling accident have been found to be acceptable while assuming no credit for containment. Therefore, the provision to allow penetrations to be opened during the handling of irradiated fuel within the containment building does not create the possibility of a new or different kind of accident from any previously evaluated. The proposed revision of penetration closure methods is also not considered an accident initiator. As an added measure of safety, however, the appropriate administrative controls required by Amendment 203 to the ANO–2 Operating License will be applicable to the containment penetrations impacted by the relevant proposals of this submittal.

Therefore, the proposed changes do *not* create the possibility of a new or different kind of accident from any previously evaluated.

Criterion 3—Does Not Involve a Significant Reduction in the Margin of Safety

The containment purge and exhaust system is not presently permitted to be placed in operation in Modes 1, 2, 3, or 4 and thus eliminates one possible path for radiological release to the public. The automatic actuations discussed above that act to isolate the system during emergency events in Modes 5 and 6 also provide assurance that a radiological release will not occur via the containment purge and exhaust system flow paths. Furthermore, the containment purge and exhaust system filtration units are not credited in the ANO–2 safety analysis in limiting offsite dose consequences during an accident. Since the containment purge and exhaust system is credited only for long-term post accident cleanup efforts and will continue to be tested to ensure the filtration system remains effective in supporting such efforts, the margin to safety remains unchanged.

ANO–2 has provided sufficient information to illustrate that the offsite dose consequences, as a result of a fuel handling accident, remain well within 10 CFR [Part] 100 limits, while assuming no credit for containment for release mitigation. Since no increase in the offsite dose potential is evident due to the opening of containment penetrations, the margin to safety is not adversely affected by this proposed revision.

The proposed revision of penetration closure methods does not impact the margin to safety. The licensee will continue to be accountable for ensuring adequate and timely closure of each containment penetration should such closure become necessary.

Therefore, the proposed changes do not involve a significant reduction in the margin of safety.

The NRC staff has reviewed the licensee's analysis and, based on this review, it appears that the three standards of 10 CFR 50.92(c) are satisfied. Therefore, the NRC staff proposes to determine that the amendment request involves no significant hazards consideration.

Attorney for licensee: Nicholas S. Reynolds, Esquire, Winston and Strawn, 1400 L Street, NW., Washington, DC 20005–3502.

NRC Section Chief: Robert A. Gramm.

Florida Power and Light Company, Docket Nos. 50–250 and 50–251, Turkey Point Plant, Units 3 and 4, Dade County, Florida

Date of amendment request: August 18, 2000.

Description of amendment request: The proposed amendments would revise the current requirements of Technical Specifications (TS) 3.3.2, Engineered Safety Features Actuation System Instrumentation, Table 3.3–2, Items 7.b and 7.c. Specifically, the proposed license amendments revise ACTION statement 18 to allow operation of the units with both channels of undervoltage protection bypassed for up to 8 hours to allow performance of the monthly surveillance without placing the units in a condition prohibited by the TS. In addition, an administrative change to Item 7.b. of TS Tables 3.3–2, 3.3–3, and 4.3–2 is requested to change ''Degraded Voltage'' to ''Undervoltage'' to make it consistent with the Updated Final Safety Analysis Report description.

Basis for proposed no significant hazards consideration determination: As required by 10 CFR 50.91(a), the licensee has provided its analysis of the issue of no significant hazards consideration, which is presented below:

(1) Operation of the facility in accordance with the proposed amendments would not involve a significant increase in the probability or consequences of an accident previously evaluated.

Approval and implementation of this amendment will have no effect on the probability or consequences of accident previously evaluated. The proposed changes allow performance of the required surveillance without placing the plant in a condition prohibited by the Technical Specifications. The undervoltage and degraded voltage protection schemes of the 480 volt load centers are not affected. Therefore, there will be no impact on any accident probabilities by the approval of this amendment. Therefore, the proposed amendments do not involve a significant increase in the probability or consequences of any accident previously evaluated.

(2) Operation of the facility in accordance with the proposed amendments would not create the possibility of a new or different kind of accident from any previously evaluated.

The proposed changes do not alter the design, physical configuration, or modes of operation of the plant. No changes are being made to the plant that would introduce any new accident causal mechanisms. The proposed Technical Specification changes do not impact any plant systems that are accident initiators, since the 480 volt undervoltage and degraded voltage protection logics are not affected. The proposed change allows performance of the required surveillance without placing the plant in a condition prohibited by the Technical Specifications. No new accident causal mechanisms are created as a result of NRC approval of the proposed amendments request. Therefore, the proposed changes do not create the possibility of a new or different kind of accident from any previously evaluated.

(3) Operation of the facility in accordance with the proposed amendments would not involve a significant reduction in a margin of safety.

The proposed changes do not change the operation, function or modes of plant or equipment operation. The proposed changes do not change the undervoltage and degraded voltage protection logics of the 480 volt load centers. The ability of the 480 volt load center voltage protection schemes to detect degraded voltage and initiate a signal to the sequencers is maintained. No new hazards or failure modes are created or postulated which may cause an accident different from any accident previously analyzed. The proposed changes revise ACTION statement 18 to allow performance of the technical specification required surveillances without placing the plant in a condition prohibited by the Technical Specifications. Therefore, operation of the facility in accordance with the proposed amendments would not involve a significant reduction in a margin of safety.

The NRC staff has reviewed the licensee's analysis and, based on this review, it appears that the three standards of 50.92(c) are satisfied. Therefore, the NRC staff proposes to determine that the amendment request involves no significant hazards consideration.

Attorney for licensee: M.S. Ross, Attorney, Florida Power & Light, P.O. Box 14000, Juno Beach, Florida 33408–0420.

NRC Section Chief: Richard P. Correia.

Indiana Michigan Power Company, Docket Nos. 50–315 and 50–316, Donald C. Cook Nuclear Plant, Units 1 and 2, Berrien County, Michigan

Date of amendment requests: August 18, 2000.

Description of amendment requests: The proposed amendments would change Technical Specification (TS) 3/4.7.4, ''Essential Service Water [ESW] System,'' and the associated Bases to add requirements that would support cross-connection to the opposite unit. The proposed amendment would also

delete a provision for a 60-day allowed outage time when an ESW flowpath is not available to support the opposite unit's shutdown functions. Administrative and editorial changes are also made to provide consistency between units, correct typographical errors, improve readability, and improve page layout.

The licensee is submitting this request in accordance with Nuclear Regulatory Commission (NRC) Administrative Letter 98–10, ''Dispositioning of Technical Specifications that are Insufficient to Assure Plant Safety,'' because the current TS requirements are nonconservative. The licensee determined that an operable ESW pump may be adversely affected by inoperability of an opposite unit ESW pump sharing the same header. With open crosstie valves on the header, an inoperable pump can permit flow to be diverted from the operable ESW pump to the loads on the opposite unit. This could be safety significant when the operable pump is supplying accident loads.

Basis for proposed no significant hazards consideration determination: As required by 10 CFR 50.91(a), the licensee has provided its analysis of the issue of no significant hazards consideration, which is presented below:

1. Does the change involve a significant increase in the probability of occurrence or consequences of an accident previously evaluated?

The accidents previously evaluated in Chapter 14 of the Updated Final Safety Analysis Report (UFSAR) that are affected by operation of the essential service water system are:

1. Loss-of-Coolant Accident (LOCA),
2. Main Steam Line Break,
3. Feedwater Line Break,
4. Loss of Feedwater,
5. Combinations of the above accidents with loss of offsite power,
6. Appendix R fire, and
7. Flooding.

The closing of an ESW unit crosstie valve to isolate an operating ESW pump from an inoperable loop will not increase the probability of occurrence of the affected accidents. Closing these valves will not affect the initiators of any previously analyzed accidents. It prevents flow in an operating loop from being reduced below design basis by flow diversion to an inoperable loop. This action will not affect the initiating frequency of any LOCAs, main steam line or feedwater line breaks, or loss of feedwater events, nor will it cause or increase the frequency of an Appendix R fire.

With respect to flooding, closing the ESW unit crosstie valves may reduce the extent of flooding should a break occur in the ESW system. It does not contribute to the probability of an ESW system pipe break occurring. Therefore, closing the unit crosstie valve(s) as directed by the revised T/S requirements is a conservative change relative to flooding.

Closing an ESW unit crosstie valve to isolate an operating ESW pump from an inoperable loop will not increase the consequences of any accident previously evaluated in the [Updated Final Safety Analysis Report] UFSAR. This configuration does not prevent the ESW system from meeting its design basis flow requirements because these flows are set with the crosstie valves closed.

As long as the ESW design basis flow requirements are met, this proposed change is bounded by the current analysis of record with respect to consequences. No new release paths are created and the frequency of release is not increased by closing the unit crosstie valve when required by the revised requirements. Preventing the diversion of flow from an operating to an inoperable loop will reduce the probability of equipment malfunction that could lead to an increase in the consequences of an accident. Loss of offsite power in conjunction with any of the affected accidents will not be impacted by closure of the crosstie valve(s) because the valves receive emergency power.

The change to delete the additional 60-day allowed outage time (AOT) of the shutdown flowpath to the opposite unit is a conservative change that only increases the availability of the shutdown flowpath.

The change to add T/S 4.0.5 to the Unit 2 surveillance is a conservative change that corrects an editorial oversight. Surveillance testing under T/S 4.0.5 has been previously evaluated and approved.

The remaining changes are administrative in nature and are not intended to change the meaning of the T/S or associated Bases.

Therefore, these changes cannot increase the consequences or probability of occurrence of an accident previously evaluated.

2. Does the change create the possibility of a new or different kind of accident from any accident previously evaluated?

Closing an ESW unit crosstie valve to isolate an operating ESW pump from an inoperable loop will not create the possibility of an accident of a new or different type than any previously evaluated. Operation with closed crosstie valves is not the normal operating lineup but it is not precluded and applicable procedures recognize they may be closed. Therefore, no system/component interfaces are affected, nor are new ones created that would contribute toward a new or different accident. As described in question 1 above, operation with closed crosstie valves is bounded by the current analysis for affected accidents, even if these are combined with a loss of offsite power. Other single failures in conjunction with this change, such as the loss of one train of emergency diesel generators on one unit, will not create an accident that is not bounded by the current analysis of record.

The change to delete the additional 60-day AOT of the shutdown flowpath to the opposite unit is a conservative change that only increases the availability of the shutdown flowpath.

The change to add T/S 4.0.5 to the Unit 2 surveillance is a conservative change that corrects an editorial oversight. Surveillance testing under T/S 4.0.5 has been previously evaluated and approved and is included in the Unit 1 surveillance requirements.

The remaining changes are administrative/editorial in nature and are not intended to change the meaning of the T/S or associated Bases.

Therefore, this proposed change does not increase the possibility of a new or different kind of accident than previously evaluated.

3. Does the change involve a significant reduction in a margin of safety?

Closing an ESW unit crosstie valve to isolate an operating ESW pump from an inoperable loop ensures the single-failure design of the ESW system will be maintained. In this manner, the system will continue to perform its required function and ensure that margins of safety is maintained.

The change to delete the additional 60-day AOT of the shutdown flowpath to the opposite unit is a conservative change that assures the availability of the shutdown flowpath.

The change to add T/S 4.0.5 to the Unit 2 surveillance is a conservative change that corrects an editorial oversight. Surveillance testing under T/S 4.0.5 has been previously evaluated and approved and is included in the Unit 1 surveillance requirements.

The remaining changes are administrative in nature and are not intended to change the meaning of the T/S or associated Bases.

Therefore, these changes do not involve a significant reduction in the margin of safety.

The NRC staff has reviewed the licensee's analysis and, based on this review, it appears that the three standards of 10 CFR 50.92(c) are satisfied. Therefore, the NRC staff proposes to determine that the amendment requests involve no significant hazards consideration.

Attorney for licensee: David W. Jenkins, Esq., 500 Circle Drive, Buchanan, MI 49107.

NRC Section Chief: Claudia M. Craig.

Indiana Michigan Power Company, Docket Nos. 50–315 and 50–316, Donald C. Cook Nuclear Plant, Units 1 and 2, Berrien County, Michigan

Date of amendment requests: September 1, 2000.

Description of amendment requests: The proposed amendments would clarify Technical Specification (TS) 3/4.4.4, ''Pressurizer,'' to reflect the current power supply to the pressurizer heaters and require two operable trains of pressurizer heaters during Modes 1, 2, and 3. The proposed amendments also revise the Bases for TS 3/4.4.4 to reflect these changes and to clarify the purpose of the pressurizer heaters.

Basis for proposed no significant hazards consideration determination: As required by 10 CFR 50.91(a), the licensee has provided its analysis of the

issue of no significant hazards consideration, which is presented below:

2. Does the change involve a significant increase in the probability of occurrence or consequences of an accident previously evaluated?

The proposed changes do not affect any accident initiators or precursors. Neither the pressurizer heaters nor the surveillance test is an accident initiator. Therefore, the proposed changes will not affect the probability of an accident.

The pressurizer heaters are not credited to mitigate the consequences of any accidents evaluated in the Updated Final Safety Analysis Report; however, they are needed during a loss of offsite power to provide adequate subcooling margin in the reactor coolant system so that natural circulation conditions can be maintained at hot standby. The proposed change to reflect the current power supply to the pressurizer heaters modifies the surveillance requirement to reflect the design and eliminates redundancy with other surveillance requirements. Components will continue to be tested just as frequently. The proposed change to require two trains of heaters instead of one will provide better assurance that the required capacity is operable.

Overall, testing the same components and requiring redundant capacity provides assurance that the required function will be performed as assumed. As such, the consequences of an accident will not significantly increase.

Therefore, the probability of occurrence or consequences of accidents previously evaluated are not increased.

(2) Does the change create the possibility of a new or different kind of accident from any accident previously analyzed?

The proposed changes do not modify any equipment or the operational limits of any equipment. The proposed changes do not introduce any new failure mechanisms to the pressurizer or any other plant systems. The proposed changes do not change the method by which any plant system performs its function.

Therefore, the proposed amendment will not create the possibility of a new or different kind of accident from any accident previously analyzed.

(3) Does the change involve a significant reduction in a margin of safety?

T/S 3.4.4 requires pressurizer heater capacity of at least 150 kW to provide adequate subcooling margin in the reactor coolant system during a loss of offsite power condition to maintain natural circulation conditions at hot standby. The proposed changes will increase the requirements for pressurizer heaters by requiring two trains of pressurizer heaters to be operable with at least 150 kW in each train instead of 150 kW total capacity. This provides assurance that the required function will be performed as assumed.

Therefore, the proposed changes do not involve a significant reduction in a margin of safety.

The NRC staff has reviewed the licensee's analysis and, based on this review, it appears that the three standards of 10 CFR 50.92(c) are satisfied. Therefore, the NRC staff proposes to determine that the amendment requests involve no significant hazards consideration.

Attorney for licensee: David W. Jenkins, Esq., 500 Circle Drive, Buchanan, MI 49107.

NRC Section Chief: Claudia M. Craig.

Indiana Michigan Power Company, Docket Nos. 50–315 and 50–316, Donald C. Cook Nuclear Plant, Units 1 and 2, Berrien County, Michigan

Date of amendment requests: September 1, 2000.

Description of amendment requests: The proposed amendments would change Technical Specification (TS) surveillance requirement 4.6.1.2 and the associated T/S Bases to address exemptions to leakage rate testing specified by 10 CFR 50, Appendix J, ''Primary Reactor Containment Leakage Testing for Water-Cooled Power Reactors,'' and Regulatory Guide 1.163, ''Performance-Based Containment Leak-Test Program,'' dated September 1995.

Basis for proposed no significant hazards consideration determination: As required by 10 CFR 50.91(a), the licensee has provided its analysis of the issue of no significant hazards consideration, which is presented below:

1. Does the change involve a significant increase in the probability of occurrence or consequences of an accident previously evaluated?

The proposed in-service testing does not affect accident initiators or precursors. The proposed ASME Section XI in-service test is routinely performed to collect data while the plant is in Mode 3. Conducting the containment leakage test in Mode 3 rather than prior to Mode 4 entry does not affect the probability of an accident. Excessive containment leakage is not a factor until after an accident has already occurred.

The proposed in-service testing does not affect the containment leakage rate limits. Therefore, the consequences of an accident are unchanged. The proposed change to conduct the testing in Mode 3 would not significantly increase the consequences of an accident. In order to have a release through the modified closed piping systems, there would need to be a loss-of-coolant accident concurrent with a through-wall leak, with enough pressure in containment to overcome main steam system pressure. These conditions are extremely unlikely to occur simultaneously in Modes 3 and 4.

Therefore, the probability of occurrence or the consequences of accidents previously evaluated are not increased.

2. Does the change create the possibility of a new or different kind of accident from any accident previously evaluated?

The proposed changes do not introduce any additional physical interface with plant equipment. Therefore, the proposed changes do not degrade the reliability of systems, structures, or components or create a new accident initiator or precursor. No new failure modes are created. The proposed changes demonstrate the leak-tight integrity of the affected portions of the containment barrier through the performance of a visual inspection for through-wall leakage.

Therefore, the change does not create the possibility of a new or different kind of accident from any accident previously evaluated.

3. Does the change involve a significant reduction in a margin of safety?

T/S 3.6.1.2 is based on limiting total containment leakage volume to the value assumed in the accident analysis at peak accident pressure. The proposed change does not change the allowable leakage rates.

Since the in-service test is performed at a significantly higher pressure than the Type A test and the in-service test acceptance criterion is zero through-wall leakage, versus a nominal amount allowed for the Type A test, the margin of safety will not be reduced. The proposed change would demonstrate the leak-tight integrity of the steam generator and associated piping, as components of the containment barrier, in a fashion at least as rigorous as the Type A test. If the leakage from containment is maintained within the T/S limit, dose rates at the site boundary will not be increased.

Therefore, the proposed activity does not involve a significant reduction in a margin of safety.

In summary, based upon the above evaluation, I&M has concluded that the proposed amendment involves no significant hazards consideration.

The NRC staff has reviewed the licensee's analysis and, based on this review, it appears that the three standards of 10 CFR 50.92(c) are satisfied. Therefore, the NRC staff proposes to determine that the amendment requests involve no significant hazards consideration.

Attorney for licensee: David W. Jenkins, Esq., 500 Circle Drive, Buchanan, MI 49107.

NRC Section Chief: Claudia M. Craig.

Indiana Michigan Power Company, Docket No. 50–316, Donald C. Cook Nuclear Plant, Unit 2, Berrien County, Michigan

Date of amendment request: September 1, 2000.

Description of amendment request: The proposed amendment would resolve an unreviewed safety question dealing with the licensee revising the Unit 1 and 2 safety analyses to incorporate changes regarding modeling of pressurizer heater operation and spray effectiveness as they relate to certain transients that are analyzed for pressurizer overfill. As a part of the revision to the Unit 2 analyses only, the licensee proposes to change the value of

the moderator temperature coefficient (MTC) assumed as an initial condition for these transients. The licensee evaluated the proposed change to the MTC value pursuant to 10 CFR 50.59 and determined that the proposed change constituted an unreviewed safety question. Therefore, in accordance with 10 CFR 50.90 the licensee is seeking approval on its use of a different value for MTC as an input assumption for analyses of these transients on Unit 2.

Basis for proposed no significant hazards consideration determination: As required by 10 CFR 50.91(a), the licensee has provided its analysis of the issue of no significant hazards consideration, which is presented below:

(1) Does the change involve a significant increase in the probability of occurrence or consequences of an accident previously evaluated?

The proposed change (*i.e.*, revise MTC assumption) and changes already implemented (*i.e.*, revised modeling of pressurizer heaters and sprays) result in more conservative modeling of transient analyses and do not involve a significant increase in the probability of occurrence or consequences of an accident previously evaluated. The proposed change and changes already implemented would affect the analyzed reactor coolant system (RCS) response to a [loss of all non-emergency alternating current] LOAC or [loss of normal feedwater] LONF transient. Operational occurrences that are postulated to occur on a moderate frequency, such as the LOAC and LONF transients, are analyzed to ensure they do not generate a more serious plant condition without other faults occurring independently. Specifically, these events are analyzed to ensure that pressurizer overfill would not occur. If pressurizer overfill occurs, liquid could pass through the power-operated relief valves or the safety valves. Since these valves are qualified to pass steam and not liquid, there is a potential to fail one of these valves in the open position, creating an uncontrolled release of primary coolant. An uncontrolled release of primary coolant through a failed-open relief or safety valve would be considered a small break loss-of-coolant accident (SBLOCA). Because a loss-of-coolant accident is a more serious condition than a LOAC or LONF transient, this would constitute a violation of the acceptance criterion discussed above. The changes already implemented affect the approach to modeling the pressurizer heaters and sprays in the accident analysis and the proposed Unit 2 MTC change affects an input assumption to the analyses, but none of these changes result in a revision to the acceptance criteria for a change in the probability of occurrence of these events.

The changes to the pressurizer heater and spray modeling assumptions result in a more conservative outcome for the LOAC and LONF transients. When considered in concert with the proposed change to reduce the assumed MTC value, the revised LOAC and LONF analyses yield acceptable results (pressurizer overfill does not occur). Pressurizer heaters and sprays are control systems that are used to modulate the primary coolant pressure during normal operation, and during certain postulated accident scenarios. Neither of these control systems are considered precursors or initiators to any accidents described in the Updated Final Safety Analysis Report (UFSAR). The change to conservatively assume the heaters are in operation during a LOAC or LONF transient does not affect the actual design or operation of the heaters during any mode of operation. Similarly, revising the assumed effectiveness of the sprays in the LOAC and LONF accident analyses has no effect on the actual design or operation of the sprays. Consequently, the changes to the assumed operation of the sprays and heaters in the LOAC and LONF accident analyses would not cause either of these control systems to become an initiator or precursor of an accident. The MTC is an analysis input that affects the way the plant responds during a temperature transient. Reducing the MTC assumed in the analysis to a more restrictive value will result in a less severe response of the reactor core and RCS to the LOAC and LONF transients. The MTC assumed for a safety analysis does not initiate any accident scenarios. Changing the MTC as an assumed input to the analysis does not result in an increase in the frequency of any initiating events. Therefore, these changes do not increase the probability of a previously evaluated accident.

The operation of pressurizer heaters and sprays has no direct impact on radiological consequences of a LOAC, LONF, or any other previously analyzed event. Similarly, the assumed MTC does not directly impact the source term or radiological release pathways for any previously analyzed events. Revising the LOAC and LONF analyses to conservatively model the pressurizer heaters and sprays and to assume a more restrictive MTC value results in precluding the occurrence of a pressurizer overfill condition. Consequently, the revised LOAC and LONF analyses demonstrate that these transients would not progress to the occurrence of a SBLOCA. Therefore, these analytical changes do not result in an increase in the consequences for these transients.

Therefore, the probability of occurrence or the consequences of accidents previously evaluated are not significantly increased.

(2) Does the change create the possibility of a new or different kind of accident from any accident previously evaluated?

The changes in modeling and assumptions for the LOAC and LONF transients do not create the possibility of a new or different kind of accident from any accident previously evaluated. The changes to the modeling of the pressurizer heaters and sprays are analysis assumption changes that result in a more conservative outcome for the LOAC and LONF transients.

Because the changes do not alter the design or operation of the pressurizer heaters or sprays, they do not introduce any new malfunctions. The changes pertain to the correction of analysis assumptions for modeling the pressurizer control features for the two UFSAR events that have been evaluated. The only potential outcome of the application of the heater and revised spray models causing the analyses to exceed the acceptance criteria is another event (*i.e.,* SBLOCA) that has been evaluated in the UFSAR. Consequently, the changes to the modeling of pressurizer heaters and sprays in the LOAC and LONF transients cannot affect or create new accident initiators or precursors or create the possibility of a new or different kind of accident.

The MTC is an analysis input that affects the way a plant responds during a temperature transient. Reducing the MTC assumed in the analysis to a more restrictive value will result in a less severe response of the reactor core and RCS to the LOAC and LONF transients. As used in these analyses, the assumed MTC value is not a factor in initiating any accident scenarios. Consequently, the application of a lower MTC value to the analyses of the LOAC and LONF transients cannot affect or create new accident initiators or precursors or create the possibility of a new or different kind of accident.

Therefore, the proposed change does not create the possibility of a new or different kind of accident from any accident previously evaluated.

(3) Does the change involve a significant reduction in a margin of safety?

The changes to modeling and assumptions for the LOAC and LONF transients do not involve a significant reduction in a margin of safety. The changes to the modeling of the pressurizer heaters and sprays result in a more conservative outcome for the LOAC and LONF transients. The acceptance criterion for events analyzed for pressurizer overfill, such as the LOAC and LONF transients, is that the pressurizer does not reach a water-solid condition. In order for the Unit 2 analyses to meet this acceptance criterion, it was necessary to change the assumed MTC from a positive value to zero at full-power conditions. However, a positive MTC has been assumed in previous NRC analyses of these transients in support of past [Donald C. Cook Nuclear Plant] CNP license amendments. Specifically, the NRC's approval of the current Unit 2 Technical Specification (T/S) 3/4.1.1.4 MTC curve (License Amendment 107 to DPR–74) was predicated, in part, on the basis that the safety analysis assumptions remain valid. Because a positive MTC was assumed in previous safety analyses, and the proposed MTC value is less conservative than the positive value assumed in those previous safety analyses, this activity is a reduction in the margin of safety.

T/S 3/4.1.1.4, Figure 3.1–2, specifies the operational limits for the MTC. The T/S allows a constant MTC of +5 pcm/°F for core power levels from 0% to 70%. Above 70% power, the allowed MTC value ramps down linearly to 0 pcm/°F at full power. The basis for the limitations on MTC are provided to ensure that the value of this coefficient remains within the limiting conditions assumed in the UFSAR accident and transient analyses. Although the revised initial MTC value assumed in these analyses is reduced from that assumed in the current

analyses of record in the CNP UFSAR, it is still within the requirements of Unit 2 T/S 3.1.1.4 for 100% power. Thus, the revised MTC value remains bounding for full-power operation. Furthermore, the analyses for the LONF and LOAC scenarios both assume an initial reactor power of 102%, which also bounds full power operation. Consequently, the revised assumption for the Unit 2 MTC ensures that the conditions assumed for the transient evaluation still bound the most limiting plant operating conditions and are consistent with the requirements in T/S 3.1.1.4. Thus, the basis for approval of the current Unit 2 MTC curve, as specified by the safety evaluation report that approved this curve (Amendment No. 107 to DPR–74), remains valid.

A sensitivity study was performed to confirm that the basis for establishing an MTC of 0 pcm/°F at full power bounds partial-power conditions with the corresponding positive MTC. Specific LOAC and LONF calculations were performed by varying (reducing) the nominal core power levels and assuming the corresponding positive MTC values at each core power level. The result of the study confirmed that, for both the LOAC and LONF events, the full power case with an MTC value of 0 pcm/°F bounds the case with a positive MTC initialized at a lower power level.

By revising the assumed MTC value from a positive value to zero, the Unit 2 LOAC and LONF analyses demonstrate that the analysis acceptance criteria are met (*i.e.,* pressurizer overfill does not occur) and bound the positive MTC cases at lower power levels. Therefore, the combination of these three analytical modeling changes results in an acceptable analytical outcome for Unit 2. Furthermore, the zero MTC value is still within the requirements of Unit 2 T/S 3.1.1.4 for 100% power. Thus, the revised MTC value remains bounding for full-power operation. Although the proposed MTC assumed in the LOAC and LONF analyses are a reduction in the margin provided to the NRC in previous evaluations of these transients, the use of the full-power MTC is consistent with the plant T/S and is bounding for full-power operation and partial-power operation at the corresponding MTC value allowed by the plant T/S.

Therefore, the proposed change does not involve a significant reduction in a margin of safety.

The NRC staff has reviewed the licensee's analysis and, based on this review, it appears that the three standards of 10 CFR 50.92(c) are satisfied. Therefore, the NRC staff proposes to determine that the amendment requests involve no significant hazards consideration.

Attorney for licensee: David W. Jenkins, Esq., 500 Circle Drive, Buchanan, MI 49107.

NRC Section Chief: Claudia M. Craig.

Niagara Mohawk Power Corporation, Docket No. 50–220, Nine Mile Point Nuclear Station Unit No. 1, Oswego County, New York

Date of amendment request: November 30, 1999; as supplemented on August 15, 2000.

Description of amendment request: The licensee proposed to amend the unit's Technical Specifications (TSs), Section 3.4.4, ''Emergency Ventilation System [EVS],'' and Section 3.4.5, ''Control Room Air Treatment [CRAT] System,'' to require testing consistent with American Society for Testing and Materials (ASTM) Standard D3803–1989. Currently Section 3.3.4 specifies the American National Standards Institute (ANSI) standard N510–1980. The licensee's application for amendment is a response to the NRC's Generic Letter (GL) 99–02, ''Laboratory Testing of Nuclear-Grade Activated Charcoal.'' The staff had previously published a notice (65 FR 9009, February 23, 2000) for the licensee's November 30, 1999, submittal. The licensee's August 15, 2000, submittal revises the original submittal by increasing the charcoal bed testing efficiency of the EVS from 95 percent to 99.5 percent, and requiring the pressure drop across the CRAT System high efficiency particulate air (HEPA) filters and charcoal adsorber banks to be demonstrated to be less than 1.5 inches of water.

Basis for proposed no significant hazards consideration determination: As required by 10 CFR 50.91(a), the licensee has provided its analysis of the issue of no significant hazards consideration, which is presented below:

The operation of Nine Mile Point Unit 1, in accordance with the proposed amendment, will not involve a significant increase in the probability or consequences of an accident previously evaluated.

The proposed TS change will require the demonstration that the pressure drop across the combined HEPA filters and charcoal adsorber banks is less than 1.5 inches of water at system design flow rate (± 10%). The CRAT System does not involve initiators or precursors to an accident previously evaluated, as this system performs mitigative functions in response to an accident. Failure of this system would result in the inability to perform its mitigative function, but would not increase the probability of an accident. Therefore, the probability of an accident previously evaluated is not increased.

The NMP1 [Nine Mile Point Unit 1] CRAT System is designed to limit doses to control room operators to less than the values allowed by General Design Criterion 19. This system contains HEPA filters and activated charcoal adsorber banks that are required by TS to have a combined pressure drop across them of less than 6 inches of water. The proposed TS change to require a combined pressure drop of less than 1.5 inches of water will assure the capability of the CRAT System to maintain the required minimum positive pressure in the Control Room complex. Therefore, the proposed change will not involve a significant increase in the consequences of an accident previously evaluated.

The operation of Nine Mile Point Unit 1, in accordance with the proposed amendment, will not create the possibility of a new or different kind of accident from any accident previously evaluated.

The proposed TS change will revise the allowable pressure drop across the CRAT System HEPA filters and charcoal adsorber banks to less than 1.5 inches of water at system design flow rate (± 10%). This change will not involve placing the system in a new configuration or operating the system in a different manner that could result in a new or different kind of accident. Maintaining a combined pressure drop across the HEPA filters and charcoal adsorber banks to less than 1.5 inches of water will assure system capability of maintaining the required minimum positive pressure in the Control Room complex. Therefore, the proposed change will not create the possibility of a new or different kind of accident from any previously evaluated.

The operation of Nine Mile Point Unit 1, in accordance with the proposed amendment, will not involve a significant reduction in a margin of safety.

The proposed TS change will not adversely affect the performance characteristics of the CRAT System, nor will it affect the ability of the system to perform its intended function. The combined pressure drop across the CRAT System HEPA filters and charcoal adsorber banks is demonstrated to determine whether sufficient flow exists to maintain the minimum positive pressure in the control room assumed in the design basis analysis. The proposed TS change will require the combined pressure drop across the HEPA filters and charcoal adsorber banks to be less than 1.5 inches of water. This will assure system capability to maintain the required minimum positive pressure in the Control Room complex. Therefore, the proposed change does not involve a significant reduction in a margin of safety.

The NRC staff has reviewed the licensee's analysis and, based on this review, it appears that the three standards of 10 CFR 50.92(c) are satisfied. Therefore, the NRC staff proposes to determine that the amendment request involves no significant hazards consideration.

Attorney for licensee: Mark J. Wetterhahn, Esquire, Winston & Strawn, 1400 L Street, NW., Washington, DC 20005–3502.

NRC Section Chief: Marsha K. Gamberoni.

Power Authority of the State of New York, Docket No. 50–333, James A. FitzPatrick Nuclear Power Plant, Oswego County, New York

Date of amendment request: August 16, 2000.

Description of amendment request: The amendment would (1) remove ''Offgas Treatment System Explosive Gas Mixture Instrumentation,'' Specification 3.7, from the Radiological Effluent Technical Specifications (RETS) contained in Appendix B and include reference to the Offgas Treatment System Explosive Gas Monitoring Program in Administrative Section 6 to the Technical Specifications contained in Appendix A; (2) replace the position title of Radiological and Environmental Services Manager, contained in the Administrative Section 6 of Appendix A, with radiation protection manager; and (3) revise Plant Staff organization requirements contained in Administrative Section 6 to require either the Operations Manager or Assistant Operations Manager hold a senior reactor operator license.

Basis for proposed no significant hazards consideration determination: As required by 10 CFR 50.91(a), the licensee has provided its analysis of the issue of no significant hazards consideration, which is presented below:

Operation of the FitzPatrick plant in accordance with the proposed amendment would not involve a significant hazards consideration as defined in 10 CFR 50.92, since it would not:

(1) Involve a significant increase in the probability or consequences of an accident previously evaluated.

The proposed changes simplify the RETS and meet Code of Federal Regulation requirements as specified in 10 CFR 50.36. Future changes to these requirements will be controlled by 10 CFR 50.59. The proposed changes are administrative in nature and do not involve any modification to any plant equipment or effect plant operation. Therefore, the proposed changes do not involve a significant increase in the probability or consequences of any previously evaluated accident.

(2) Create the possibility of a new or different kind of accident from any accident previously evaluated.

The proposed changes are administrative in nature, do not involve any physical alterations to any plant equipment, and cause no change in the method by which any safety related system performs its function. Therefore, this proposed amendment will not create the possibility of a new or differen[t] kind of accident from any accident previously evaluated.

(3) Involve a significant reduction in a margin of safety.

The proposed changes are administrative in nature, will not alter the basic regulatory requirements, and do not affect any safety analyses. Therefore, no margin of safety is reduced as a result of these changes.

Based on the above evaluation, the Authority has concluded that these changes do not involve a significant hazards consideration.

The NRC staff has reviewed the licensee's analysis and, based on this review, it appears that the three standards of 10 CFR 50.92(c) are satisfied. Therefore, the NRC staff proposes to determine that the amendment request involves no significant hazards consideration.

Attorney for licensee: Mr. David E. Blabey, 1633 Broadway, New York, New York 10019.

NRC Section Chief: Marsha K. Gamberoni.

Southern Nuclear Operating Company, Inc., et al., Docket Nos. 50–424 and 50–425, Vogtle Electric Generating Plant, Units 1 and 2, Burke County, Georgia

Date of amendment request: August 28, 2000.

Description of amendment request: The proposed amendments would revise Technical Specification (TS) Section 5.5.2 b. ''Primary Coolant Sources Outside Containment'' by changing the system leak test frequency from a ''refueling cycle'' to ''at least once every 18 months.'' The proposed change will also allow the provisions of Surveillance Requirement (SR) 3.0.2 to apply to TS 5.5.2 b. (SR 3.0.2 allows a surveillance to be preformed within 1.25 times the interval specified in a Frequency.)

Basis for proposed no significant hazards consideration determination: As required by 10 CFR 50.91(a), the licensee has provided its analysis of the issue of no significant hazards consideration, which is presented below:

1. Do the proposed changes involve a significant increase in the probability or consequences of an accident previously evaluated?

No. The proposed changes affect programmatic administrative controls of the Vogtle Electric Generating Plant (VEGP) Technical Specifications (TS) for leak testing systems or portions thereof that are outside containment and could contain highly radioactive fluids. Only the interval for leak testing is affected by the proposed change, and this interval has no impact on the likelihood of any of the initiating events assumed for any accident previously evaluated. Therefore, the proposed change will not result in a significant increase in the probability of any accident previously evaluated. Whereas the current TS require testing at refueling cycle intervals or less, the proposed change will specify testing at least once per 18 months, and the provisions of Surveillance Requirement (SR) 3.0.2 will be applicable. Refueling cycle intervals at VEGP are nominally 18 months in duration, but they can vary with unplanned outages, power reductions, etc. Under the proposed change, leak testing will be performed at 18-month intervals, regardless of actual refueling cycle length, and if an extension of that interval becomes necessary for systems or portions thereof due to scheduling considerations, the provisions of SR 3.0.2 will provide the necessary flexibility. However, the maximum extension that can be applied is 25% of 18 months or four and one-half months. Leak testing will continue at regular intervals, and any necessary maintenance to minimize leakage will continue to be performed. Therefore, the proposed change will not result in a significant increase in the consequences of any accident previously evaluated.

2. Do the proposed changes create the possibility of a new or different kind of accident from any previously evaluated?

No. The proposed change affects only the interval at which leak test requirements are performed pursuant to TS 5.5.2.b. The proposed change does not alter the operation of the plant or any of its equipment, introduce any new equipment, or result in any new failure mechanisms or limiting single failures. Therefore, there is no potential for a new accident and no changes to the way that an analyzed accident will progress. Therefore, the proposed change does not create the possibility of a new or different kind of accident from any previously evaluated.

3. Do the proposed changes result in a significant reduction in a margin of safety?

No. The proposed change affects only the interval at which leak test requirements are performed pursuant to TS 5.5.2.b. Under the proposed change, leak testing will be performed at 18-month intervals, regardless of actual refueling cycle length, and if an extension of that interval becomes necessary for systems or portions thereof due to scheduling considerations, the provisions of SR 3.0.2 will provide the necessary flexibility. However, the maximum extension that can be applied is 25% of 18 months or four and one-half months. Leak testing will continue at regular intervals, and any necessary maintenance to minimize leakage will continue to be performed. The intent of the program is maintained while providing the same scheduling flexibility that is already provided for the surveillance requirements of Section 3.0 of the TS. Therefore, the proposed change will not result in a significant reduction in a margin of safety.

The NRC staff has reviewed the licensee's analysis and, based on this review, it appears that the three standards of 10 CFR 50.92(c) are satisfied. Therefore, the NRC staff proposes to determine that the amendment request involves no significant hazards consideration.

Attorney for licensee: Mr. Arthur H. Domby, Troutman Sanders, NationsBank Plaza, Suite 5200, 600 Peachtree Street, NE., Atlanta, Georgia 30308–2216.

NRC Section Chief: Richard L. Emch, Jr.

Tennessee Valley Authority, Docket Nos. 50–390 and 50–391, Watts Bar Nuclear Plant Units 1 and 2, Rhea County, Tennessee

Date of amendment request: March 10, 2000.

Description of amendment request: The proposed amendment would change the Operating License to Physical Security/Contingency Plan—Tamper Indicating/Line Supervision Alarms Testing Frequency at Watts Bar Nuclear Plant (WBN) Units 1 and 2.

Basis for proposed no significant hazards consideration determination: As required by 10 CFR 50.91(a), the licensee has provided its analysis of the issue of no significant hazards consideration, which is presented below.

A. The proposed amendment does not involve a significant increase in the probability or consequences of an accident previously evaluated.

There are no safety-related systems, components, or radiological waste systems associated with the tamper indicating/line supervision alarms. The proposed change to the Physical Security Plan does not involve any physical alterations of plant configuration, changes to setpoints, or changes to any operating parameters of the security system. The proposed change does not increase the frequency of the precursors to design basis events or operational transients analyzed in the Watts Bar Final Safety Analysis Report. * * * Consequently, the proposed change does not involve a significant increase in the probability or consequences of an accident previously evaluated.

B. The proposed amendment does not create the possibility of a new or different kind of accident from any accident previously evaluated.

There are no safety-related systems, components, or radiological waste systems associated with the tamper indicating/line supervision alarms. The proposed change to extend the testing frequency cannot create a Final Safety Analysis Report type accident. * * * Consequently, the proposed change does not create the possibility of a new or different kind of accident from any accident previously evaluated.

C. The proposed amendment does not involve a significant reduction in a margin of safety.

Implementation of this activity will not reduce the margin of safety in the Technical Specification as there are no Technical Specification requirements associated with the physical security system. The proposed amendment to the Physical Security Plan does not change or reduce the effectiveness of any security/safeguards measures currently in place at WBN. * * * Therefore, the proposed change does not involve a significant reduction in a margin of safety.

The NRC staff has reviewed the licensee's analysis and, based on this review, it appears that the three standards of 10 CFR 50.92(c) are satisfied. The staff has also reviewed the changes to License Condition 2.E for Watts Bar Unit 1 Operating License, as well as the change to the Security Plan. Therefore, the NRC staff proposes to determine that the amendment request involves no significant hazards consideration.

Attorney for licensee: General Counsel, Tennessee Valley Authority, 400 West Summit Hill Drive, ET 10H, Knoxville, Tennessee 37902.

NRC Section Chief: Richard P. Correia.

Previously Published Notices of Consideration of Issuance of Amendments to Facility Operating Licenses, Proposed No Significant Hazards Consideration Determination, and Opportunity for a Hearing

The following notices were previously published as separate individual notices. The notice content was the same as above. They were published as individual notices either because time did not allow the Commission to wait for this biweekly notice or because the action involved exigent circumstances. They are repeated here because the biweekly notice lists all amendments issued or proposed to be issued involving no significant hazards consideration.

For details, see the individual notice in the **Federal Register** on the day and page cited. This notice does not extend the notice period of the original notice.

FirstEnergy Nuclear Operating Company, et al., Docket Nos. 50–334 and 50–412, Beaver Valley Power Station, Unit Nos. 1 and 2, Shippingport, Pennsylvania

Date of amendment request: May 12, 2000.

Brief description of amendment request: The proposed amendment would revise the standard to which the control room ventilation charcoal and supplementary leak collection and release system (SLCRS) charcoal must be laboratory tested as specified in: BVPS–1 Technical Specification (TS) 4.7.7.1.1.c.2 for the control room emergency habitability systems; BVPS–1 TS 4.7.8.1.b.3 for the SLCRS; BVPS–2 TS 4.7.7.1.d for the control room emergency air cleanup and pressurization system; and BVPS–2 TS 4.7.8.1.b.3 for the SLCRS. NRC Generic Letter 99–02, ''Laboratory Testing of Nuclear-Grade Activated Charcoal,'' dated June 3, 1999, requested licensees to revise their TS criteria associated with laboratory testing of ventilation charcoal to a valid test protocol, which included American Society for Testing and Materials (ASTM) D3803–1989. This license amendment request revises the charcoal laboratory standard to follow ASTM D3803–1989 for each BVPS Unit. This license amendment request also: (1) Revises the minimum amount of output in kilowatts needed for the control room emergency ventilation system heaters at each BVPS unit; (2) revises BVPS–1 SLCRS surveillance testing criteria to be consistent with American Nuclear Standards Institute/American Society of Mechanical Engineers N510–1980, the BVPS–1 control room ventilation testing, and BVPS–2 SLCRS/control room ventilation testing; and (3) makes minor typographical corrections and editorial changes.

Date of publication of individual notice in ***Federal Register:*** August 29, 2000 (65 FR 52449).

Expiration date of individual notice: September 28, 2000.

FirstEnergy Nuclear Operating Company, et al., Docket No.50–412, Beaver Valley Power Station, Unit No. 2, Shippingport, Pennsylvania

Date of amendment request: May 1, 2000, as supplemented July 21, 2000.

Brief description of amendment request: The proposed amendment would: (1) Revise Technical Specification (TS) requirements regarding the minimum number of radiation monitoring instrumentation channels required to be operable during movement of fuel within the containment; (2) revise the Modes in which the surveillance specified by Table 4.3–3, ''Radiation Monitoring Instrumentation Surveillance Requirements,'' Item 2.c.ii is required; (3) revise TS 3.9.4, ''Containment Building Penetrations,'' to allow both personnel air lock (PAL) doors and other containment penetrations to be open during movement of fuel assemblies within containment, provided certain conditions are met; (4) revise applicability and action statement requirements of TS 3.9.4. to be for only during movement of fuel assemblies within containment; (5) revise periodicity and applicability of Surveillance Requirement (SR) 4.9.4.1; (6) revise SR 4.9.4.2 to verify flow rate of air to the supplemental leak collection and release system (SLCRS) rather than verifying the flow rate through the system; (7) add two new SRs, 4.9.4.3 and 4.9.4.4, for verification and demonstration of SLCRS operability; (8) modify TS 3/4.9.9 for the containment purge exhaust and

isolation system to be applicable only during movement of fuel assemblies within containment; (9) revise associated TS Bases as well as make editorial and format changes; and, (10) revise the BVPS–2 Updated Final Safety Analysis Report (UFSAR) description of a fuel-handling accident (FHA) and its radiological consequences. The changes to the BVPS–2 UFSAR reflect a revised FHA analysis that the licensee performed to evaluate the potential consequences of having containment penetrations and/or the PAL open during movement of fuel assemblies within containment. These UFSAR revisions include potential exclusion area boundary, low population zone, and control room operator doses as a result of an FHA.

Date of publication of individual notice in ***Federal Register:*** August 23, 2000 (65 FR 51342).

Expiration date of individual notice: September 22, 2000.

Commonwealth Edison Company, Docket Nos. STN 50–454 and STN 50–455, Byron Station, Unit Nos. 1 and 2, Ogle County, Illinois, Docket Nos. STN 50–456 and STN 50–457, Braidwood Station, Unit Nos. 1 and 2, Will County, Illinois

Date of application for amendments: January 20, 2000, as supplemented April 3 and July 7, 2000.

Brief description of amendments: The amendments revised the technical specifications to extend the allowable completion times associated with restoration of an inoperable emergency diesel generator. The amendments also permitted the performance of the 24-hour endurance run during Modes 1 and 2.

Date of issuance: September 1, 2000.

Effective date: Effective upon completion of the plant modifications cited in the April 3, 2000, submittal.

Amendment Nos.: 114 and 108.

Facility Operating License Nos. NPF–37, NPF–66, NPF–72 and NPF–77: The amendments revised the Technical Specifications.

Date of initial notice in ***Federal Register:*** April 19, 2000 (65 FR 21035). The April 3 and July 7, 2000, submittals provided additional information that did not change the initial proposed no significant hazards consideration determination. The Commission's related evaluation of the amendments is contained in a Safety Evaluation dated September 1, 2000.

No significant hazards consideration comments received: No.

Duke Energy Corporation, et al., Docket Nos. 50–413 and 50–414, Catawba Nuclear Station, Units 1 and 2, York County, South Carolina

Date of application for amendments: April 18, 2000, as supplemented by letter dated July 27, 2000.

Brief description of amendments: The amendments revised the Technical Specifications (TS) 3.7.10, ''Control Room Area Ventilation System,'' and TS 3.7.12, ''Auxiliary Building Filtered Ventilation Exhaust System,'' to establish actions to be taken for inoperable ventilation systems due to a degraded control room pressure boundary or emergency core cooling system pump rooms pressure boundary, respectively.

Date of issuance: September 5, 2000.

Effective date: As of the date of issuance and shall be implemented within 30 days from the date of issuance.

Amendment Nos.: 187/180.

Facility Operating License Nos. NPF–35 and NPF–52: Amendments revised the Technical Specifications.

Date of initial notice in ***Federal Register:*** May 31, 2000 (65 FR 34744).

The supplement dated July 27, 2000, provided additional clarifications that did not change the scope of the April 18, 2000, application and the initial proposed no significant hazards consideration determination.

The Commission's related evaluation of the amendments is contained in a Safety Evaluation dated September 5, 2000.

No significant hazards consideration comments received: No.

Duke Energy Corporation, Docket Nos. 50–269, 50–270, and 50–287, Oconee Nuclear Station, Units 1, 2, and 3, Oconee County, South Carolina

Date of application of amendments: December 16, 1998; supplemented January 25, August 5, and October 4, 1999; and March 29 and June 8, 2000.

Brief description of amendments: The amendments revised the Technical Specifications associated with the High Pressure Injection System.

Date of Issuance: September 6, 2000.

Effective date: As of the date of issuance and shall be implemented within 75 days.

Amendment Nos.: 314, 314, & 314.

Facility Operating License Nos. DPR–38, DPR–47, and DPR–55: Amendments revised the Technical Specifications.

Date of initial notice in ***Federal Register:*** February 24, 1999 (64 FR 9187).

The supplements dated August 5 and October 4, 1999; and March 29 and June 8, 2000, provided clarifying information that did not change the scope of the December 16, 1998, or the January 25, 1998, submittals and the proposed no significant hazards consideration determination.

The Commission's related evaluation of the amendments is contained in a Safety Evaluation dated September 6, 2000.

No significant hazards consideration comments received: No.

Entergy Operations, Inc., Docket No. 50–368, Arkansas Nuclear One, Unit No. 2, Pope County, Arkansas

Date of application for amendment: January 27, 2000.

Brief description of amendment: The amendment revised the Technical Specifications by providing actions associated with inoperable control room emergency ventilation or cooling systems during movement of irradiated fuel during shutdown modes of operation, when the allowed outage times associated with these systems are not met.

Date of issuance: August 28, 2000.

Effective date: As of the date of issuance to be implemented within 30 days from the date of issuance.

Amendment No.: 219.

Facility Operating License No. NPF–6: Amendment revised the Technical Specifications.

Date of initial notice in ***Federal Register:*** March 22, 2000 (65 FR 15379).

The Commission's related evaluation of the amendment is contained in a Safety Evaluation dated August 28, 2000.

No significant hazards consideration comments received: No .

Entergy Operations, Inc., Docket No. 50–368, Arkansas Nuclear One, Unit No. 2, Pope County, Arkansas

Date of application for amendment: March 8, 2000, as supplemented by letters dated June 13 and August 15, 2000.

Brief description of amendment: The amendment revised Technical Specification Definition 1.12 , ''Core Alteration,'' to explicitly define core alteration as the movement or manipulation of any fuel, sources, or reactivity control components within the reactor vessel with the vessel head removed and fuel in the vessel.

Date of issuance: September 7, 2000.

Effective date: As of the date of issuance to be implemented within 30 days from the date of issuance.

Amendment No.: 220.

Facility Operating License No. NPF–6: Amendment revised the Technical Specifications.

Date of initial notice in ***Federal Register:*** April 5, 2000 (65 FR 17914).

The August 15, 2000, supplement withdrew the exclusion clause, ''excluding coupling/uncoupling of control element assemblies,'' from the proposed definition in the initial application. The June 13 and August 15, 2000, supplemental letters provided clarifying information that was within the scope of the original FEDERAL REGISTER notice and did not change the staff's initial no significant hazards consideration determination.

The Commission's related evaluation of the amendment is contained in a Safety Evaluation dated September 7, 2000.

No significant hazards consideration comments received: No.

Entergy Operations, Inc., Docket No. 50–382, Waterford Steam Electric Station, Unit 3, St. Charles Parish, Louisiana

Date of amendment request: July 15, 1999, as supplemented by letter dated March 29, 2000.

Brief description of amendment: The amendment creates a new Technical Specification (TS) for the Main Feedwater Isolation Valves (MFIV) Section modeled after the guidelines of TS 3.7.3 in NUREG–1432. Additionally, the letter provides for the Nuclear Regulatory Commission staff review of an unreviewed safety question regarding the crediting of the Reactor Trip Override feature and Auxiliary Feedwater Pump high discharge pressure trip as assisting the operation of the MFIV during their required safety function, to close on a Main Steam Isolation Signal.

Date of issuance: September 5, 2000.

Effective date: As of the date of issuance and shall be implemented 60 days from the date of issuance.

Amendment No.: 167.

Facility Operating License No. NPF–38: The amendment revised the Technical Specifications.

Date of initial notice in ***Federal Register:*** January 26, 2000, (65 FR 4275). The March 29, 2000, supplement provided clarifying information that did not expand the scope of the original **Federal Register** notice, or change the scope of the initial proposed no significant hazards consideration determination.

The Commission's related evaluation of the amendment is contained in a Safety Evaluation dated September 5, 2000.

No significant hazards consideration comments received: No.

Entergy Operations, Inc., Docket No. 50–382, Waterford Steam Electric Station, Unit 3, St. Charles Parish, Louisiana

Date of amendment request: October 29, 1999, and as supplemented by letter dated June 29, 2000.

Brief description of amendment: Entergy Operations, Inc. (licensee) has proposed to revise its Updated Final Safety Analysis Report (UFSAR) to discuss the probability threshold for when physical protection of safety-related components from tornado missiles is required for certain components. The proposed changes involve the use of Nuclear Regulatory Commission (NRC) approved probability risk methodology to assess the need for additional tornado missile protection and demonstrate that the probability of damage due to tornado missiles striking safety related components is acceptably low.

Date of issuance: September 7, 2000.

Effective date: As of the date of issuance and shall be implemented 60 days from the date of issuance.

Amendment No.: 168.

Facility Operating License No. NPF–38: The amendment revised the UFSAR.

Date of initial notice in ***Federal Register:*** June 14, 2000 (65 FR 37426).

The June 29, 2000, supplement provided clarifying information that did not expand the scope of the original **Federal Register** notice, or change the scope of the initial proposed no significant hazards consideration determination.

The Commission's related evaluation of the amendment is contained in a Safety Evaluation dated September 7, 2000.

No significant hazards consideration comments received: No

FirstEnergy Nuclear Operating Company, et al., Docket Nos. 50–334 and 50–412, Beaver Valley Power Station, Unit Nos. 1 and 2, Shippingport, Pennsylvania

Date of application for amendments: May 1, 2000.

Brief description of amendments: The amendments revised the Unit 1 and 2 Technical Specification (TS) 3/4.6.4.2 Surveillance Requirement (SR). The change allows performance of hydrogen recombiner functional test at containment pressures greater than 13 psia. This is accomplished by measuring the flow under normal or current test conditions (*e.g.*, atmospheric pressure) and calculating the expected system performance under design basis operating conditions. The surveillance was revised to verify that the recombiner flow, when corrected to the post-accident design conditions, is greater than or equal to the required flow. The corresponding design basis temperature for post-accident recombiner operation is included in the SR because it is required to correct the test flow to the design basis operating conditions. In order to support the calculations necessary to confirm the recombiner blower performance, the change included the addition of an equation and associated discussion to the bases. The equation will correct the measured test flow to a corresponding flow at the design basis operating pressure and temperature. In addition to the technical change described above, SR 4.6.4.2.b.3 was modified by separating the criteria for the system blower performance and heater operation into separate parts of the same surveillance to improve the presentation of the requirements. Format and editorial changes were included as necessary to facilitate the revision of the TS text to conform to the current TS page format, and addition of text to the bases.

Date of issuance: September 7, 2000.

Effective date: As of date of issuance and shall be implemented within 60 days.

Amendment Nos.: 232 and 114.

Facility Operating License Nos. DPR–66 and NPF–73: Amendments revised the Technical Specifications.

Date of initial notice in ***Federal Register:*** June 14, 2000 (65 FR 37427).

The Commission's related evaluation of the amendments is contained in a Safety Evaluation dated September 7, 2000.

No significant hazards consideration comments received: No.

Notice of Issuance of Amendments to Facility Operating Licenses

During the period since publication of the last biweekly notice, the Commission has issued the following amendments. The Commission has determined for each of these amendments that the application complies with the standards and requirements of the Atomic Energy Act of 1954, as amended (the Act), and the Commission's rules and regulations. The Commission has made appropriate findings as required by the Act and the Commission's rules and regulations in 10 CFR Chapter I, which are set forth in the license amendment.

Notice of Consideration of Issuance of Amendment to Facility Operating License, Proposed No Significant Hazards Consideration Determination, and Opportunity for A Hearing in connection with these actions was

published in the **Federal Register** as indicated.

Unless otherwise indicated, the Commission has determined that these amendments satisfy the criteria for categorical exclusion in accordance with 10 CFR 51.22. Therefore, pursuant to 10 CFR 51.22(b), no environmental impact statement or environmental assessment need be prepared for these amendments. If the Commission has prepared an environmental assessment under the special circumstances provision in 10 CFR 51.12(b) and has made a determination based on that assessment, it is so indicated.

For further details with respect to the action see (1) the applications for amendment, (2) the amendment, and (3) the Commission's related letter, Safety Evaluation and/or Environmental Assessment as indicated. All of these items are available for public inspection at the Commission's Public Document Room, the Gelman Building, 2120 L Street, NW., Washington, DC through September 22, 2000 or at One White Flint North, 11555 Rockville Pike (first floor), Rockville, Maryland 20852 effective September 26, 2000, and electronically from the ADAMS Public Library component on the NRC Web site, *http://www.nrc.gov* (the Electronic Reading Room).

Commonwealth Edison Company, Docket Nos. STN 50–454 and STN 50–455, Byron Station, Unit Nos. 1 and 2, Ogle County, Illinois, Docket Nos. STN 50–456 and STN 50–457, Braidwood Station, Unit Nos. 1 and 2, Will County, Illinois

Date of application for amendments: January 20, 2000, as supplemented April 3 and July 7, 2000.

Brief description of amendments: The amendments revised the technical specifications to extend the allowable completion times associated with restoration of an inoperable emergency diesel generator. The amendments also permitted the performance of the 24-hour endurance run during Modes 1 and 2.

Date of issuance: September 1, 2000.

Effective date: Effective upon completion of the plant modifications cited in the April 3, 2000, submittal.

Amendment Nos.: 114 and 108.

Facility Operating License Nos. NPF–37, NPF–66, NPF–72 and NPF–77: The amendments revised the Technical Specifications.

Date of initial notice in ***Federal Register:*** April 19, 2000 (65 FR 21035). The April 3 and July 7, 2000, submittals provided additional information that did not change the initial proposed no significant hazards consideration determination. The Commission's related evaluation of the amendments is contained in a Safety Evaluation dated September 1, 2000.

No significant hazards consideration comments received: No.

Duke Energy Corporation, et al., Docket Nos. 50–413 and 50–414, Catawba Nuclear Station, Units 1 and 2, York County, South Carolina

Date of application for amendments: April 18, 2000, as supplemented by letter dated July 27, 2000.

Brief description of amendments: The amendments revised the Technical Specifications (TS) 3.7.10, ''Control Room Area Ventilation System,'' and TS 3.7.12, ''Auxiliary Building Filtered Ventilation Exhaust System,'' to establish actions to be taken for inoperable ventilation systems due to a degraded control room pressure boundary or emergency core cooling system pump rooms pressure boundary, respectively.

Date of issuance: September 5, 2000.

Effective date: As of the date of issuance and shall be implemented within 30 days from the date of issuance.

Amendment Nos.: 187/180.

Facility Operating License Nos. NPF–35 and NPF–52: Amendments revised the Technical Specifications.

Date of initial notice in ***Federal Register:*** May 31, 2000 (65 FR 34744).

The supplement dated July 27, 2000, provided additional clarifications that did not change the scope of the April 18, 2000, application and the initial proposed no significant hazards consideration determination.

The Commission's related evaluation of the amendments is contained in a Safety Evaluation dated September 5, 2000.

No significant hazards consideration comments received: No.

Duke Energy Corporation, Docket Nos. 50–269, 50–270, and 50–287, Oconee Nuclear Station, Units 1, 2, and 3, Oconee County, South Carolina

Date of application of amendments: December 16, 1998; supplemented January 25, August 5, and October 4, 1999; and March 29 and June 8, 2000.

Brief description of amendments: The amendments revised the Technical Specifications associated with the High Pressure Injection System.

Date of Issuance: September 6, 2000.

Effective date: As of the date of issuance and shall be implemented within 75 days.

Amendment Nos.: 314, 314, and 314.

Facility Operating License Nos. DPR–38, DPR–47, and DPR–55: Amendments revised the Technical Specifications.

Date of initial notice in ***Federal Register:*** February 24, 1999 (64 FR 9187).

The supplements dated August 5 and October 4, 1999; and March 29 and June 8, 2000, provided clarifying information that did not change the scope of the December 16, 1998, or the January 25, 1998, submittals and the proposed no significant hazards consideration determination.

The Commission's related evaluation of the amendments is contained in a Safety Evaluation dated September 6, 2000.

No significant hazards consideration comments received: No.

Entergy Operations, Inc., Docket No. 50–368, Arkansas Nuclear One, Unit No. 2, Pope County, Arkansas

Date of application for amendment: January 27, 2000.

Brief description of amendment: The amendment revised the Technical Specifications by providing actions associated with inoperable control room emergency ventilation or cooling systems during movement of irradiated fuel during shutdown modes of operation, when the allowed outage times associated with these systems are not met.

Date of issuance: August 28, 2000.

Effective date: As of the date of issuance to be implemented within 30 days from the date of issuance.

Amendment No.: 219.

Facility Operating License No. NPF–6: Amendment revised the Technical Specifications.

Date of initial notice in ***Federal Register:*** March 22, 2000 (65 FR 15379).

The Commission's related evaluation of the amendment is contained in a Safety Evaluation dated August 28, 2000.

No significant hazards consideration comments received: No.

Entergy Operations, Inc., Docket No. 50–368, Arkansas Nuclear One, Unit No. 2, Pope County, Arkansas

Date of application for amendment: March 8, 2000, as supplemented by letters dated June 13 and August 15, 2000.

Brief description of amendment: The amendment revised Technical Specification Definition 1.12 , ''Core Alteration,'' to explicitly define core alteration as the movement or manipulation of any fuel, sources, or reactivity control components within the reactor vessel with the vessel head removed and fuel in the vessel.

Date of issuance: September 7, 2000.

Effective date: As of the date of issuance to be implemented within 30 days from the date of issuance.

Amendment No.: 220.

Facility Operating License No. NPF–6: Amendment revised the Technical Specifications.

Date of initial notice in ***Federal Register*** April 5, 2000 (65 FR 17914).

The August 15, 2000, supplement withdrew the exclusion clause, ''excluding coupling/uncoupling of control element assemblies,'' from the proposed definition in the initial application. The June 13 and August 15, 2000, supplemental letters provided clarifying information that was within the scope of the original **Federal Register** notice and did not change the staff's initial no significant hazards consideration determination.

The Commission's related evaluation of the amendment is contained in a Safety Evaluation dated September 7, 2000.

No significant hazards consideration comments received: No.

Entergy Operations, Inc., Docket No. 50–382, Waterford Steam Electric Station, Unit 3, St. Charles Parish, Louisiana

Date of amendment request: July 15, 1999, as supplemented by letter dated March 29, 2000.

Brief description of amendment: The amendment creates a new Technical Specification (TS) for the Main Feedwater Isolation Valves (MFIV) Section modeled after the guidelines of TS 3.7.3 in NUREG–1432. Additionally, the letter provides for the Nuclear Regulatory Commission staff review of an unreviewed safety question regarding the crediting of the Reactor Trip Override feature and Auxiliary Feedwater Pump high discharge pressure trip as assisting the operation of the MFIV during their required safety function, to close on a Main Steam Isolation Signal.

Date of issuance: September 5, 2000.

Effective date: As of the date of issuance and shall be implemented 60 days from the date of issuance.

Amendment No.: 167.

Facility Operating License No. NPF–38: The amendment revised the Technical Specifications.

Date of initial notice in ***Federal Register:*** January 26, 2000 (65 FR 4275). The March 29, 2000, supplement provided clarifying information that did not expand the scope of the original Federal **Federal Register** notice, or change the scope of the initial proposed no significant hazards consideration determination.

The Commission's related evaluation of the amendment is contained in a Safety Evaluation dated September 5, 2000.

No significant hazards consideration comments received: No.

Entergy Operations, Inc., Docket No. 50–382, Waterford Steam Electric Station, Unit 3, St. Charles Parish, Louisiana

Date of amendment request: October 29, 1999, and as supplemented by letter dated June 29, 2000.

Brief description of amendment: Entergy Operations, Inc. (licensee) has proposed to revise its Updated Final Safety Analysis Report (UFSAR) to discuss the probability threshold for when physical protection of safety-related components from tornado missiles is required for certain components. The proposed changes involve the use of Nuclear Regulatory Commission (NRC) approved probability risk methodology to assess the need for additional tornado missile protection and demonstrate that the probability of damage due to tornado missiles striking safety related components is acceptably low.

Date of issuance: September 7, 2000.

Effective date: As of the date of issuance and shall be implemented 60 days from the date of issuance.

Amendment No.: 168.

Facility Operating License No. NPF–38: The amendment revised the UFSAR.

Date of initial notice in ***Federal Register:*** June 14, 2000 (65 FR 37426).

The June 29, 2000, supplement provided clarifying information that did not expand the scope of the original **Federal Register** notice, or change the scope of the initial proposed no significant hazards consideration determination.

The Commission's related evaluation of the amendment is contained in a Safety Evaluation dated September 7, 2000.

No significant hazards consideration comments received: No.

FirstEnergy Nuclear Operating Company, et al., Docket No. 50–412, Beaver Valley Power Station, Unit 2, Shippingport, Pennsylvania

Date of application for amendment: June 17, 1999, as supplemented September 15, 1999, and February 15, and June 29, 2000.

Brief description of amendment: The amendment revised Technical Specifications (TSs) Section 3.4.9.1 and associated figures to extend the applicability of the heatup and cooldown curves from 10 Effective Full Power Years (EFPY) to 15 EFPY. The changes included new heatup and cooldown curves developed in accordance with the methodology provided in Regulatory Guide 1.99, Revision 2, and Code Case N–640. The applicability of TS Section 3.4.9.3, Overpressure Protection Systems, was also updated to 15 EFPY, and the maximum allowable power-operated relief valve setpoints for the over pressure protection system were revised. Revisions to the TS Bases were also made.

Date of issuance: September 6, 2000.

Effective date: As of date of issuance and shall be implemented within 60 days.

Amendment No: 113.

Facility Operating License No. NPF–73. Amendment revised the Technical Specifications.

Date of initial notice in ***Federal Register:*** November 17, 1999, (64 FR 62707). The September 15, 1999, and February 15, and June 29, 2000, letters provided supplemental and revised information, but did not change the initial proposed no significant hazards consideration determination or expand the amendment beyond the scope of the initial notice.

The Commission's related evaluation of the amendment is contained in a Safety Evaluation dated September 6, 2000.

No significant hazards consideration comments received: No.

FirstEnergy Nuclear Operating Company, et al., Docket Nos. 50–334 and 50–412, Beaver Valley Power Station, Unit Nos. 1 and 2, Shippingport, Pennsylvania.

Date of application for amendments: May 1, 2000.

Brief description of amendments: The amendments revised the Unit 1 and 2 Technical Specification (TS) 3/4.6.4.2 Surveillance Requirement (SR). The change allows performance of hydrogen recombiner functional test at containment pressures greater than 13 psia. This is accomplished by measuring the flow under normal or current test conditions (*e.g.*, atmospheric pressure) and calculating the expected system performance under design basis operating conditions. The surveillance was revised to verify that the recombiner flow, when corrected to the post-accident design conditions, is greater than or equal to the required flow. The corresponding design basis temperature for post-accident recombiner operation is included in the SR because it is required to correct the test flow to the design basis operating conditions. In order to support the calculations necessary to confirm the recombiner blower performance, the change included the addition of an equation and associated discussion to the bases. The equation will correct the measured test flow to a corresponding

flow at the design basis operating pressure and temperature. In addition to the technical change described above, SR 4.6.4.2.b.3 was modified by separating the criteria for the system blower performance and heater operation into separate parts of the same surveillance to improve the presentation of the requirements. Format and editorial changes were included as necessary to facilitate the revision of the TS text to conform to the current TS page format, and addition of text to the bases.

Date of issuance: September 7, 2000.

Effective date: As of date of issuance and shall be implemented within 60 days.

Amendment Nos.: 232 and 114.

Facility Operating License Nos. DPR–66 and NPF–73: Amendments revised the Technical Specifications.

Date of initial notice in ***Federal Register:*** June 14, 2000 (65 FR 37427).

The Commission's related evaluation of the amendments is contained in a Safety Evaluation dated September 7, 2000.

No significant hazards consideration comments received: No.

FirstEnergy Nuclear Operating Company, et al., Docket Nos. 50–334 and 50–412, Beaver Valley Power Station, Unit Nos. 1 and 2, Shippingport, Pennsylvania

Date of application for amendments: July 20, 1999.

Brief description of amendments: The amendments relocated the following Technical Specification (TS) items to the Licensing Requirements Manual:

In-core Detectors (Unit 1 and 2),
Chlorine Detection System (Unit 1 and 2)
Turbine Over-speed Protection (Unit 2 only),
Crane Travel Spent Fuel Pool Building (Unit 1 and 2).

Additionally, certain information on the Remote Shutdown Panel Monitoring Instrumentation was moved to the Updated Final Safety Analysis Report. Finally, additions to the TS Bases, and certain editorial and format changes were made.

Date of issuance: September 7, 2000.

Effective date: As of date of issuance and shall be implemented within 90 days.

Amendment Nos.: 233 and 115.

Facility Operating License Nos. DPR–66 and NPF–73: Amendments revised the Technical Specifications.

Date of initial notice in ***Federal Register:*** November 17, 1999 (64 FR 62709).

The Commission's related evaluation of the amendments is contained in a Safety Evaluation dated September 7, 2000.

No significant hazards consideration comments received: No.

FirstEnergy Nuclear Operating Company, Docket No. 50–440, Perry Nuclear Power Plant, Unit 1, Lake County, Ohio

Date of application for amendment: June 17, 1999, as supplemented by letters dated January 17, March 1, March 20, May 9, and August 21, 2000.

Brief description of amendment: This amendment revised multiple surveillance requirements to support a 24-month operating cycle.

Date of issuance: August 29, 2000.

Effective date: As of the date of issuance and shall be implemented within 90 days.

Amendment No.: 115.

Facility Operating License No. NPF–58: This amendment revised the Technical Specifications.

Date of initial notice in ***Federal Register:*** August 25, 1999 (64 FR 46438).

The supplemental information contained clarifying information and did not change the initial no significant hazards consideration determination and did not expand the scope of the original **Federal Register** notice.

The Commission's related evaluation of the amendment is contained in a Safety Evaluation dated August 29, 2000.

No significant hazards consideration comments received: No.

Niagara Mohawk Power Corporation, Docket No. 50–410, Nine Mile Point Nuclear Station, Unit 2, Oswego County, New York

Date of application for amendment: July 14, 2000.

Brief description of amendment: The amendment changes the implementation dates of the Improved Technical Specifications, previously issued by Amendment No. 91, and requirements for the Oscillation Power Range Monitor, previously issued by Amendment No. 92, from August 31, 2000, to December 31, 2000.

Date of issuance: August 29, 2000.

Effective date: As of the date of issuance to be implemented no later than December 31, 2000.

Amendment No.: 94.

Facility Operating License No. NPF–69: Amendment revised the Operating License.

Date of initial notice in ***Federal Register:*** July 27, 2000 (65 FR 46183).

The staff's related evaluation of the amendment is contained in a Safety Evaluation dated August 29, 2000.

No significant hazards consideration comments received: No.

Pacific Gas and Electric Company, Docket No. 50–133, Humboldt Bay Power Plant, Unit 3, Humboldt County, California

Date of application for amendment: December 1, 1999

Brief description of amendment: The amendment revised the technical specifications (TS) to reflect relocation of fire protection requirements from the TS to the Defueled Safety Analysis Report, quality assurance audit requirements from the TS to the Quality Assurance Plan and modification of the administrative controls section of the TS to reflect the current facility organization.

Date of issuance: August 31, 2000.

Effective date: August 31, 2000, and shall be implemented no later than 60 days from the date of issuance. Implementation shall include the relocation of technical specification requirements to the appropriate licensee-controlled document as identified in the licensee's application dated December 1, 1999, and reviewed in the staff's safety evaluation dated August 31, 2000.

Amendment No.: 33.

Facility Operating License No. DPR–7: The amendment revised the Technical Specifications.

Date of initial notice in ***Federal Register:*** January 12, 2000 (65 FR 1927).

The Commission's related evaluation of the amendment is contained in a Safety Evaluation dated August 31, 2000.

No significant hazards consideration comments received: No.

PECO Energy Company, Public Service Electric and Gas Company Delmarva Power and Light Company, and Atlantic City Electric Company, Docket Nos. 50–277 and 50–278, Peach Bottom Atomic Power Station, Unit Nos. 2 and 3, York County, Pennsylvania

Date of application for amendments: July 1, 1999, as supplemented August 11 and September 1, 1999.

Brief description of amendments: The amendments revise the licenses to reflect changes related to the transfer of the license for the Peach Bottom Atomic Power Station, Units 2 and 3, to the extent held by Public Service Electric and Gas Company, to PSEG Nuclear Limited Liability Company.

Date of issuance: August 21, 2000.

Effective date: As of date of issuance, to be implemented within 30 days.

Amendments Nos.: 234 and 238.

Facility Operating License Nos. DPR–44 and DPR–56: The amendments revised the License.

Date of initial notice in ***Federal Register:*** August 5, 1999 (64 FR 42728).

The August 11 and September 1, 1999, supplements provided clarifying information that did not change the initial proposed no significant hazards consideration determination or expand the scope of the original **Federal Register** notice.

The Commission's related evaluation of the amendments is contained in a Safety Evaluation dated February 16, 2000.

No significant hazards consideration comments received: No.

PECO Energy Company, PSEG Nuclear LLC, Delmarva Power and Light Company, and Atlantic City Electric Company; Docket Nos. 50–277 and 50–278, Peach Bottom Atomic Power Station, Unit Nos. 2 and 3, York County, Pennsylvania

Date of application for amendments: May 31, 2000, as supplemented August 18, 2000.

Brief description of amendments: The amendments revise the Peach Bottom Atomic Power Station, Units 2 and 3, Technical Specifications Surveillance Requirement 3.6.1.3.11 to allow a representative sample of reactor instrumentation line excess flow check valves (EFCVs) to be tested every 24 months, instead of testing each EFCV every 24 months.

Date of issuance: September 8, 2000.

Effective date: As of date of issuance, to be implemented within 30 days.

Amendments Nos.: 235 & 239.

Facility Operating License Nos. DPR–44 and DPR–56: The amendments revised the Technical Specifications.

Date of initial notice in ***Federal Register:*** August 9, 2000 (65 FR 48756). The August 18, 2000, letter provided clarifying information that did not change the initial proposed no significant hazards consideration determination. The Commission's related evaluation of the amendments is contained in a Safety Evaluation dated September 8, 2000.

No significant hazards consideration comments received: No.

South Carolina Electric & Gas Company, South Carolina Public Service Authority, Docket No. 50–395, Virgil C. Summer Nuclear Station, Unit No. 1, Fairfield County, South Carolina

Date of application for amendment: April 6, 2000.

Brief description of amendment: This amendment eliminates the response time testing of the Reactor Trip System and the Engineered Safety Feature Actuation System.

Date of issuance: August 29, 2000.

Effective date: August 29, 2000.

Amendment No.: 146.

Facility Operating License No. NPF–12: Amendment revises the Technical Specifications.

Date of initial notice in ***Federal Register:*** May 3, 2000 (65 FR 25768).

The Commission's related evaluation of the amendment is contained in a Safety Evaluation dated August 29, 2000.

No significant hazards consideration comments received: No.

South Carolina Electric & Gas Company, South Carolina Public Service Authority, Docket No. 50–395, Virgil C. Summer Nuclear Station, Unit No. 1, Fairfield County, South Carolina

Date of application for amendment: April 6, 2000.

Brief description of amendment: This amendment proposes to modify the pressure testing requirements for the American Society of Mechanical Engineers (ASME) Code portions of the diesel fuel oil system that currently require a hydrostatic test every 10 years at 110% of system design pressure. The revision would allow ASME Code Class 3 portions of the diesel fuel oil system to be pressure tested in accordance with Section XI of the Code as required by Technical Specification 4.0.5. This will permit the use of Code Case N–498–1 as accepted by Regulatory Guide 1.147, Revision 12, for assessment of the diesel fuel oil system pressure boundary integrity.

Date of issuance: August 29, 2000.

Effective date: August 29, 2000.

Amendment No.: 147.

Facility Operating License No. NPF–12: Amendment revises the Technical Specifications.

Date of initial notice in ***Federal Register:*** May 3, 2000 (65 FR 25768).

The Commission's related evaluation of the amendment is contained in a Safety Evaluation dated August 29, 2000.

No significant hazards consideration comments received: No.

South Carolina Electric & Gas Company, South Carolina Public Service Authority, Docket No. 50-395, Virgil C. Summer Nuclear Station, Unit No. 1, Fairfield County, South Carolina

Date of application for amendment: January 5, 2000, as supplemented August 25, 2000.

Brief description of amendment: This amendment changes Technical Specification (TS) 3/4 6.1.6, including its Bases, and adds TS 6.8.4.h. The changes support the new requirements of 10 CFR 50.55a, which require licensees to update their Containment Vessel Structural Integrity Programs to incorporate the provisions of ASME Section XI, Subsection IWL (1992 Edition with 1992 Addenda) and the five additional provisions found in 10 CFR 50.55a(b)(2)(viii).

Date of issuance: September 6, 2000.

Effective date: September 6, 2000.

Amendment No.: 148.

Facility Operating License No. NPF–12: Amendment revises the Technical Specifications.

Date of initial notice in Federal Register: February 23, 2000 (65 FR 9010). The August 25, 2000, supplement revised the proposed wording of Bases Section 3/4.6.1.6 and TS 6.8.4.h to clarify the reporting requirements; clarification did not impact the initial no significant hazards consideration determination.

The Commission's related evaluation of the amendment is contained in a Safety Evaluation dated September 6, 2000.

No significant hazards consideration comments received: No.

Southern California Edison Company, et al., Docket Nos. 50–361 and 50–362, San Onofre Nuclear Generating Station, Units 2 and 3, San Diego County, California

Date of application for amendments: November 8, 1999 (PCN–454), as supplemented March 16 and May 24, 2000.

Brief description of amendments: The amendments revise Surveillance Requirement (SR) 3.8.1.18 of Technical Specification (TS) 3.8.1, ''A.C. Sources—Operating.'' The amendments revise the SR to read: Verify the timing of each sequenced load block is within its timer setting plus or minus 10% or plus or minus 2.5 seconds, whichever is greater, with the exception of the 5 second load group which is minus 0.5, plus 2.5 seconds, for each programmed time interval load sequence.

Date of issuance: September 1, 2000.

Effective date: September 1, 2000, to be implemented within 30 days of issuance.

Amendment Nos.: Unit 2–169; Unit 3–160.

Facility Operating License Nos. NPF–10 and NPF–15: The amendments revised the Technical Specifications.

Date of initial notice in ***Federal Register:*** December 1, 1999 (64 FR 67339).

The supplemental letters dated March 16 and May 24, 2000, provided clarifying information that was within the scope of the original application and **Federal Register** notice and did not change the staff's initial proposed no significant hazards consideration determination.

The Commission's related evaluation of the amendments is contained in a

Safety Evaluation dated September 1, 2000.

No significant hazards consideration comments received: No.

Southern Nuclear Operating Company, Inc., Georgia Power Company, Oglethorpe Power Corporation, Municipal Electric Authority of Georgia, City of Dalton, Georgia, Docket Nos. 50–321 and 50–366, Edwin I. Hatch Nuclear Plant, Units 1 and 2, Appling County, Georgia

Date of application for amendments: June 1, 2000.

Brief description of amendments: The amendments revise the reactor vessel pressure and temperature limit curves that are in the Technical Specifications.

Date of issuance: August 29, 2000.

Effective date: As of the date of issuance and shall be implemented within 30 days from the date of issuance.

Amendment Nos.: 222 and 163.

Facility Operating License Nos. DPR–57 and NPF–5: Amendments revised the Technical Specifications.

Date of initial notice in ***Federal Register:*** June 28, 2000 (65 FR 39960).

The Commission's related evaluation of the amendments is contained in a Safety Evaluation dated August 29, 2000.

No significant hazards consideration comments received: No.

Tennessee Valley Authority, Docket Nos. 50–327 and 50–328, Sequoyah Nuclear Plant, Units 1 and 2, Hamilton County, Tennessee

Date of application for amendments: June 22, 2000.

Brief description of amendments: These amendments revise the Technical Specifications (TS) to remove the applicability of core alteration requirements from those TS that are designed to mitigate the consequences of a fuel handling accident. The applicable TS bases are also revised.

Date of issuance: August 28, 2000.

Effective date: August 28, 2000.

Amendment Nos.: 260 and 251.

Facility Operating License Nos. DPR–77 and DPR–79: Amendments revise the TS.

Date of initial notice in ***Federal Register:*** July 26, 2000 (65 FR 46017).

The Commission's related evaluation of the amendment is contained in a Safety Evaluation dated August 28, 2000.

No significant hazards consideration comments received: No.

Tennessee Valley Authority, Docket No. 50–390, Watts Bar Nuclear Plant, Unit 1, Rhea County, Tennessee.

Date of application for amendment: April 10, 2000, as supplemented August 9, 2000.

Brief description of amendment: Revision of Technical. Specifications (TS) to allow use of the F-star (F*) alternate repair criterion for degraded steam generator tubes.

Date of issuance: September 8, 2000.

Effective date: September 8, 2000.

Amendment No.: 27.

Facility Operating License No. NPF–90: Amendment revises the TS.

Date of initial notice in ***Federal Register:*** May 31, 2000 (65 FR 34750).

The August 9, 2000, letter provided clarifying information that did not change the initial proposed no significant hazards consideration determination.

The Commission's related evaluation of the amendment is contained in a Safety Evaluation dated September 8, 2000.

No significant hazards consideration comments received: No.

TXU Electric, Docket Nos. 50–445 and 50–446, Comanche Peak Steam Electric Station, Unit Nos. 1 and 2, Somervell County, Texas.

Date of amendment request: May 25, 2000.

Brief description of amendments: The amendments revise the Technical Specifications (TS) to allow certain reactor containment building penetrations to be open during refueling activities under appropriate administrative controls. Specifically, this revision fully adopts the NRC-approved TS Task Force (TSTF) Traveler TSTF–312, Revision 1, by adding a Note to TS 3.9.4.c denoting this provision, to clarify the use of this allowance.

Date of issuance: September 5, 2000.

Effective date: As of the date of issuance and shall be implemented within 30 days from the date of issuance.

Amendment Nos.: 78 and 78.

Facility Operating License Nos. NPF–87 and NPF–89: The amendments revised the TSs.

Date of initial notice in ***Federal Register:*** July 12, 2000 (65 FR 43053).

The Commission's related evaluation of the amendments is contained in a Safety Evaluation dated September 5, 2000.

No significant hazards consideration comments received: No.

Vermont Yankee Nuclear Power Corporation, Docket No. 50–271, Vermont Yankee Nuclear Power Station, Vernon, Vermont.

Date of application for amendment: December 14, 1999.

Brief description of amendment: The amendment relocates procedural details related to the Radiological Environmental Technical Specifications (TSs) to certain licensee-controlled documents.

Date of Issuance: August 24, 2000.

Effective date: As of the date of issuance, and shall be implemented within 60 days.

Amendment No.: 193.

Facility Operating License No. DPR–28: Amendment revised the Technical Specifications.

Date of initial notice in ***Federal Register:*** February 9, 2000 (65 FR 6412).

The Commission's related evaluation of this amendment is contained in a Safety Evaluation dated August 24, 2000.

No significant hazards consideration comments received: No.

Dated at Rockville, Maryland, this 14th day of September 2000.

For the Nuclear Regulatory Commission.

John A. Zwolinski,

Director, Division of Licensing Project Management Office of Nuclear Reactor Regulation.

[FR Doc. 00–24021 Filed 9–19–00; 8:45 am]

BILLING CODE 7590–01–P

NUCLEAR REGULATORY COMMISSION

Staff Meetings Open to the Public: Final Policy Statement

AGENCY: Nuclear Regulatory Commission.

ACTION: Final Policy Statement.

SUMMARY: The Nuclear Regulatory Commission is finalizing revisions to its ''Policy Statement on Staff Meetings Open to the Public,'' to state that public notice of meetings will be provided primarily through the NRC Web site at *http://www.nrc.gov.* NRC will also discontinue announcing public meetings, changes, and cancellations through its public meeting notice system electronic bulletin board, and telephone recording, and through the Weekly Compilation of Press Releases and posting in the NRC's Public Document Room.

EFFECTIVE DATE: September 20, 2000.

FOR FURTHER INFORMATION CONTACT: Rosetta O. Virgilio, Office of the Executive Director for Operations, U.S.

Nuclear Regulatory Commission, Washington, DC 20555–0001, Telephone: 301–415–2307; *email:rov@nrc.gov*

ADDITIONAL INFORMATION: The NRC solicited public comment on the proposed revisions to the Policy Statement in the January 25, 2000 **Federal Register** (65 FR 3982). All four comment letters received supported the revisions; three of the four recommended improvements to the NRC Web site for noticing public meetings. The NRC's Office of the Chief Information Officer is planning to develop a Web-based public meeting system to replace the existing system used to schedule and track meeting notices and cancellations. The proposed new system will allow the staff to implement all of the commenters suggestions. Copies of the comment letters can be viewed at the NRC Public Document Room located at 2120 L Street, NW. (Lower Level), Washington, DC.

The text of the revised Policy Statement follows in its entirety. The final Policy Statement contains a revised Section D, identifying the NRC Web site as the primary mechanism for announcing staff meetings open to the public. The electronic bulletin board and automated telephone recording will be eliminated. Members of the public who do not have access to the Internet can contact the NRC's Public Document Room staff at 800–397–4209 for information on scheduled meetings. Other changes to Section D of the Policy Statement make it consistent with current NRC staff guidance and procedures, as discussed in the proposed Policy Statement notice. These changes include: revising the statement that a meeting notice should be provided to the Meeting Announcement Coordinator at least 10 days before a meeting to state that meeting notices will be provided to the public as soon as meeting arrangements have been made, generally no fewer than 10 calendar days before the meeting; and eliminating the current 60 day limit on the announced schedule of future meetings.

IV. Commission Policy Statement on Staff Meetings Open to the Public

A. Purpose

This statement presents the policy that the Nuclear Regulatory Commission (NRC) staff will follow in opening meetings between the NRC staff and one or more outside persons to public observation. The policy continues NRC's longstanding practice of providing the public with the fullest information practicable on its activities and of conducting business in an open manner, while balancing the need for the NRC staff to exercise its regulatory and safety responsibilities without undue administrative burden. This policy also announces central agency services available to the public for obtaining schedules for the staff meetings that are open to public attendance. Implementing guidance will be issued to the NRC staff as a management directive. This meeting policy is a matter of NRC discretion and may be departed from as NRC convenience and necessity may dictate.

B. Definition

A public meeting is a planned, formal encounter open to public observation between one or more NRC staff members and one or more outside persons physically present at a single meeting site, with the expressed intent of discussing substantive issues that are directly associated with the NRC's regulatory and safety responsibilities. An outside person is any individual who is not:

a. An NRC employee;

b. Under contract to the NRC;

c. Acting in an official capacity as a consultant to the NRC;

d. Acting in an official capacity as a representative of an agency of the executive, legislative, or judicial branch of the U.S. Government (except when the agency is subject to NRC regulatory oversight);

e. Acting in an official capacity as a representative of a foreign government;

f. Acting in an official capacity as a representative of a State or local government (except when specific NRC licensing or regulatory matters are discussed).

C. Applicability and Exemptions

1. This policy applies solely to NRC staff-sponsored and conducted meetings and not to meetings conducted by outside entities that NRC staff members might attend and participate in. It does not apply to the Commission or offices that report directly to the Commission. Similarly, it does not apply to meetings between the NRC staff and representatives of State governments, including Agreement State representatives, relating to NRC Agreement State activities or to State regulatory actions or to other matters of general interest to the State or to the Commission, that is, matters other than specific NRC licensing or regulatory actions involving specific licensees. Also, the policy is not intended to apply to or supersede any existing law, rule or regulation that addresses public attendance at a specific type of meeting. For example, 10 CFR Part 7 specifically addresses public attendance at advisory committee meetings; and 10 CFR Part 9, Subpart C, addresses public attendance at Commission meetings. The policy also does not negate existing Memoranda of Understanding, procedural agreements, or other formal agreements or requirements regarding the accessibility of the public to observe or participate in meetings between NRC and its licensees or any other entities. In addition, the policy does not apply to meetings involving enforcement matters under 10 CFR Part 2, Appendix C nor to settlement conferences.

2. In general, meetings between the NRC staff and outside persons will be classified as public meetings unless the NRC staff determines that the subject matter to be discussed—

a. Is specifically authorized by an Executive Order to be kept secret in the interests of national defense or foreign policy (classified information) or specifically exempted from public disclosure by statute;

b. Contains trade secrets and commercial or financial information (proprietary information);

c. Contains safeguards information;

d. Is of a personal nature where such disclosure would constitute a clearly unwarranted invasion of personal privacy;

e. Is related to a planned, ongoing, or completed investigation and/or contains information compiled for law enforcement purposes;

f. Could result in the inappropriate disclosure and dissemination of preliminary, unverified information;

g. Is a general information exchange having no direct, substantive connection to a specific NRC regulatory decision or action;

h. Indicates that the administrative burden associated with public attendance at the meeting could result in interfering with the NRC staff's execution of its safety and regulatory responsibilities, such as when the meeting is an integral part of the execution of the NRC inspection program.

It is important to note that whether or not a meeting should be open for public attendance is dependent primarily on the subject matter to be discussed, not who outside nor who within the NRC staff is participating (e.g., staff level versus senior management).

Also note that meetings between staff and licensees or trade groups to discuss technical issues or licensee performance would normally be open because they may lead to a specific regulatory decision or action. However, should a

meeting involving a general information exchange be closed and should discussions during such a meeting approach issues that might lead to a specific regulatory decision or action, the NRC staff may advise the meeting attendees that such matters cannot be discussed in a closed meeting and propose discussing the issues in a future open meeting.

D. Notice to the Public

1. Meeting announcement information is to be provided to the public as soon as the staff is certain that a meeting will be held and firm date, time, and facility arrangements have been made, but generally no fewer than 10 calendar days before the meeting. Where a meeting must be scheduled but cannot be announced 10 calendar days in advance, the staff will provide as much advance notice as possible. Public notice of meetings will be made via the Internet from the NRC Web site at *http://www.nrc.gov.* Meeting changes or cancellations will also be announced promptly on the NRC Web site. Meeting notices, changes to meetings, and cancellations will be updated each working day, if required, on the NRC Web site. Members of the public who cannot access the NRC Web site can contact the NRC Public Document Room staff via a toll free number for information on scheduled NRC meetings.

2. Meeting announcements will include the date, time, and location of the meeting, as well as its purpose, the NRC office(s) and outside participant(s) in attendance, and the name and telephone number of the NRC contact for the meeting.

Dated at Rockville, Maryland, this 14th day of September, 2000.

For the Nuclear Regulatory Commission.

Annette Vietti-Cook,

Secretary to the Commission.

[FR Doc. 00–24161 Filed 9–19–00; 8:45 am]

BILLING CODE 7590–01–P

OFFICE OF MANAGEMENT AND BUDGET

Budget Analysis Branch; Sequestration Update Report

AGENCY: Office of Management and Budget—Budget Analysis Branch.

ACTION: Notice of transmittal of sequestration update report to the President and Congress.

SUMMARY: Pursuant to section 254(b) of the Balanced Budget and Emergency Control Act of 1985, as amended, the Office of Management and Budget hereby reports that it has submitted its Sequestration Update Report to the President, the Speaker of the House of Representatives, and the President of the Senate.

FOR FURTHER INFORMATION CONTACT: Sarah Lee, Budget Analysis Branch—202/395–3674.

Dated: September 13, 2000.

Robert L. Nabors, II,

Executive Assistant and Assistant Director for Administration.

[FR Doc. 00–24104 Filed 9–19–00; 8:45 am]

BILLING CODE 3110–01–U

OFFICE OF PERSONNEL MANAGEMENT

Excepted Service

AGENCY: Office of Personnel Management.

ACTION: Notice.

SUMMARY: This gives notice of positions placed or revoked under Schedules A and B, and placed under Schedule C in the excepted service, as required by Civil Service Rule VI, Exceptions from the Competitive Service.

FOR FURTHER INFORMATION CONTACT: Pam Shivery, Director, Washington Service Center, Employment Service (202) 606–1015.

SUPPLEMENTARY INFORMATION: The Office of Personnel Management published its last monthly notice updating appointing authorities established or revoked under the Excepted Service provisions of 5 CFR 213 on August 4, 2000 (65 FR 48019). Individual authorities established or revoked under Schedules A and B and established under Schedule C between July 1, 2000, and July 31, 2000, appear in the listing below. Future notices will be published on the fourth Tuesday of each month, or as soon as possible thereafter. A consolidated listing of all authorities as of June 30 will also be published.

Schedule A

The following Schedule A authority was established for July 2000:

Court Services and Offender Supervision Agency of the District of Columbia: All positions, except for the Director, established to create the Court Services and Offender Supervision Agency of the District of Columbia. No new appointments may be made under this authority after September 30, 2001.

No Schedule A authorities were revoked July 2000.

Schedule B

No Schedule B authorities were established or revoked during July 2000.

Schedule C

The following Schedule C authorities were established during July 2000:

Commission on Civil Rights

Special Assistant to the Commissioner. Effective July 28, 2000.

Department of Agriculture

Staff Assistant to the Deputy Chief of Staff. Effective July 6, 2000.

Confidential Assistant to the Deputy Under Secretary, Rural Development. Effective July 12, 2000.

Confidential Assistant to the Assistant Secretary for Administration. Effective July 24, 2000.

Department of Commerce

Special Assistant to the Under Secretary for Technology. Effective July 24, 2000.

Senior Advisor to the Deputy Assistant Secretary for Technology and Aerospace Industries. Effective July 24, 2000.

Senior Advisor to the Senior Advisor to the Secretary, National Oceanic and Atmospheric Administration. Effective July 25, 2000.

Department of Defense

Special Assistant for Cleanup Policy to the Assistant Deputy Under Secretary of Defense for Environmental Cleanup. Effective July 12, 2000.

Personal and Confidential Assistant to the General Counsel. Effective July 27, 2000.

Department of Education

Special Assistant to the Chief of Staff. Effective July 12, 2000.

Confidential Assistant to the Director, Office of Educational Technology. Effective July 21, 2000.

Confidential Assistant to the Director of Scheduling and Briefing Staff. Effective July 24, 2000.

Department of Energy

Director of Special Projects to the Deputy Assistant Secretary, Office of Planning, Policy and Budget. Effective July 24, 2000.

Department of Housing and Urban Development

Special Counsel to the General Counsel. Effective July 31, 2000.

Department of Labor

Secretary's Representative to the Assistant Secretary, Office of Congressional and Intergovernmental Affairs. Effective July 7, 2000.

Chief of Staff to the Assistant Secretary for Employment and Training. Effective July 12, 2000.

Chief of Staff to the Assistant Secretary, Employment Standards Administration. Effective July 21, 2000.

Intergovernmental Officer to the Assistant Secretary for Congressional and Intergovernmental Affairs. Effective July 24, 2000.

Intergovernmental Officer to the Assistant Secretary, Office of Congressional and Intergovernmental Affairs. Effective July 26, 2000.

Special Assistant to the Chief of Staff. Effective July 31, 2000.

Department of Transportation

Special Assistant to the Deputy Administrator, Federal Aviation Administration. Effective July 13, 2000.

Senior Policy Advisor to the Secretary of Transportation. Effective July 28, 2000.

Department of the Treasury

Special Assistant to the Deputy Secretary of the Treasury. Effective July 11, 2000.

Senior Advisor to the Assistant Secretary (Economic Policy). Effective July 28, 2000.

National Endowment for the Humanities

Director, Office of Public Affairs to the Chief of Staff. Effective July 13, 2000.

Small Business Administration

Counselor to the Administrator. Effective July 11, 2000.

United States Tax Court

Secretary (Confidential Assistant) to the Judge. Effective July 5, 2000.

Authority: 5 U.S.C. 3301 and 3302; E.O. 10577, 3 CFR 1954–1958 Comp., P. 218.

Janice R. Lachance,

Director, Office of Personnel Management.

[FR Doc. 00–24130 Filed 9–19–00; 8:45 am]

BILLING CODE 6325–01–U

SECURITIES AND EXCHANGE COMMISSION

[Rel. No. IC–24641; File No. 812–11994]

PFL Life Insurance Company, et al., Notice of Application

September 14, 2000

AGENCY: Securities and Exchange Commission (''SEC'' or ''Commission'').

ACTION: Notice of application for an Order of Exemption under Section 6(c) of the Investment Company Act of 1940 (''1940 Act'') granting exemptions from the provisions of Sections 2(a)(32), 22(c), and 27(i)(2)(A) of the 1940 Act and Rule 22c–1 thereunder to permit the recapture of bonus credits applied to premium payments made under certain deferred variable annuity contracts.

Applicants: PFL Life Insurance Company (''PFL''), PFL Life Variable Annuity Account C (''PFL Account''), AFSG Securities Corporation (''AFSG''), Transamerica Life Insurance and Annuity Company (''Transamerica''), Separate Account VA–6 (''Transamerica Account''), Transamerica Securities Sales Corporation (''TSSC''), Western Reserve Life Assurance Co. of Ohio (''Western Reserve''), and WRL Series Annuity Account (''WRL Account'') (collectively, the ''Applicants''). PFL, Transamerica, and Western Reserve are together referenced herein as the ''Companies.'' PFL Account, Transamerica Account, and WRL Account are together referenced herein as the ''Accounts,'' or individually as an ''Account.''

SUMMARY OF APPLICATION: Applicants seek an order of the Commission under Section 6(c) of the 1940 Act to the extent necessary to permit, under specified circumstances, the recapture of a bonus credit previously applied to premium payments made under: (i) deferred variable annuity contracts that the Companies will issue through the Accounts (''Policies''), and (ii) deferred variable annuity contracts that the Companies, and any other separate account of the Companies, or their successors in interest, may issue in the future that are substantially similar to the contracts in all material respects (''Future Policies''). Applicants also request that the order being sought extend to certain National Association of Securities Dealers, Inc. (''NASD'') member broker-dealers which may, in the future, act as principal underwriter of such policies.

FILING DATE: The application was filed on February 24, 2000, and amended and restated on August 25, 2000.

Hearing or Notification of Hearing: An order granting the application will be issued unless the Commission orders a hearing. Interested persons may request a hearing by writing to the Secretary of the SEC and serving Applicants with a copy of the request, personally or by mail. Hearing requests must be received by the Commission by 5:30 p.m. on October 6, 2000, and should be accompanied by proof of service on the Applicants in the form of an affidavit or, for lawyers, a certificate of service. Hearing requests should state the nature of the writer's interest, the reason for the request, and the issues contested. Persons may request notification of a hearing by writing to the Secretary of the SEC.

ADDRESSES: Secretary, Securities and Exchange Commission, 450 Fifth Street, N.W., Washington, D.C. 20549–0609. Applicants, c/o Frank A. Camp, Esquire, PFL Life Insurance Company, 4333 Edgewood Road, NE, Cedar Rapids, Iowa 52499; Thomas E. Pierpan, Esq., Western Reserve Life Assurance Co. of Ohio, 570 Carillon Parkway, St. Petersburg, Florida 33716–1202; and Regina Fink, Esq., Transamerica Life Insurance and Annuity Company, 1150 South Olive, Los Angeles, California 90015–2211. Copies to Frederick R. Bellamy, Esquire, Sutherland Asbill & Brennan LLP, 1275 Pennsylvania Avenue, N.W., Washington, D.C. 20004–2415.

FOR FURTHER INFORMATION CONTACT: Ronald A. Holinsky, Senior Counsel or Lorna MacLeod, Branch Chief, Office of Insurance Products, Division of Investment Management, at (202) 942–0670.

SUPPLEMENTARY INFORMATION: The following is a summary of the application. The complete application may be obtained for a fee from the Commission's Public Reference Branch, 450 Fifth Street, N.W., Washington, D.C. 20549–0102 (tel. (202) 942–8090).

Applicant's Representations

1. PFL, a stock life insurance company incorporated under the laws of the State of Iowa, is a wholly-owned indirect subsidiary of AEGON USA, Inc., which conducts substantially all of its operations through subsidiary companies engaged in the insurance business or in providing non-insurance financial services. All of the stock of AEGON USA, Inc. is indirectly owned by AEGON N.V. of the Netherlands.

2. Transamerica, a stock life insurance company incorporated under the laws of the State of California, is an indirect subsidiary of AEGON N.V.

3. Western Reserve, incorporated under the laws of Ohio, is wholly-owned by First AUSA Life Insurance Company, a stock life insurance company that is wholly-owned by AEGON USA, Inc.

4. The PFL Account is registered under the 1940 Act as a unit investment trust (File No. 811–09503). The assets of the PFL account support certain flexible premium variable annuity policies, and interests in the PFL Account offered through such contracts have been registered under the Securities Act of 1933 (''1933 Act'') on Form N–4 (File No. 333–83957).

5. The Transamerica Account is registered under the 1940 Act as a unit investment trust (File No. 811–07753). The assets of the Transamerica Account

support certain flexible premium variable annuity contracts, and interests in the Transamerica Account offered through such contracts have been registered under the 1933 Act on Form N–4 (File No. 333–09745).

6. The WRL Account is registered under the 1940 Act as a unit investment trust (File No. 811–05672). The assets of the WRL Account support certain flexible premium variable annuity contracts, and interests in the WRL Account offered through such contracts have been registered under the 1933 Act on Form N–4 (File No. 333–93169).

7. AFSG, an affiliate of the Companies, is the principal underwriter and the distributor of the Policies for the PFL Account and the WRL Account. AFSG is registered with the Commission as a broker-dealer under the Securities Exchange Act of 1934, as amended (the ''1934 Act''), and is a member of the NASD.

8. TSSC, an affiliate of the Companies, is the principal underwriter and the distributor of the policies for the Transamerica Account. TSSC is registered with the Commission as a broker-dealer under the 1934 Act and is a member of the NASD.

9. The Policies are flexible premium variable annuity policies issued by the Companies through their respective separate accounts. The Policies provide for accumulation of values on a variable basis, fixed basis, or both during the accumulation period, and may provide settlement or annuity payment options on a variable basis, fixed basis, or both. The Policies may be purchased on a non-qualified tax basis. The Policies may also be purchased and used in connection with plans qualifying for favorable federal income tax treatment.

10. Each Account is comprised of sub-accounts that will invest exclusively in a designated series of shares representing an interest in a particular portfolio of one or more open-end management investment companies of the series type registered with the Commission on Form N–1A (''Funds''). The owner determines in the application or transmittal form for a Policy how the net premium payments will be allocated among the sub-accounts of the Accounts and any available guaranteed period options or dollar cost averaging options of the fixed account. The policy value will vary with the investment performance of the sub-accounts selected, and the owner bears the entire risk for amounts allocated to an Account.

11. For each premium payment an owner makes, the Companies may add a bonus credit equal to a percentage of the premium payment to the owner's policy value. PFL's bonus credit equals 5% of each premium payment (4% if the Owner is 70 years old or older), Transamerica's bonus credit equals 3.25% of each premium payment, and Western Reserve's bonus credit equals 4.5% of premium payments. The Companies may vary the percentage but acknowledge that the exemptive order requested will not provide exemption for a bonus credit recapture in excess of 5% for PFL, 3.25% for Transamerica, and 4.5% for Western Reserve.

12. An owner may return his or her Policy for a refund. An owner will generally have 10 days to return his or her Policy depending on the state where the Policy is issued. PFL will generally return the policy value minus any bonus credit to the owner, but may return premium payments (not including the bonus credit), if required by state law. Transamerica will generally return the purchase payments allocated to any general account options (minus withdrawals), plus the variable accumulated value, and minus any bonus credit. If required by state law, Transamerica will return the purchase payments (minus withdrawal and not including any bonus credits) or the greater of purchase payments (minus withdrawals and not including any bonus credits) or the account value (minus the bonus credits). In all events, Transamerica will not refund the amount of the bonus credit. Western Reserve will generally return total purchase payments received (minus any bonus credit) plus or minus any gains or losses in the amounts invested in the sub-accounts. Western Reserve may return purchase payments (not including the bonus credit) if required by state law.

13. An owner may surrender the Policy or make a partial withdrawal from the policy value during the accumulation period. If an owner surrenders a Policy or takes a partial withdrawal, a Company may deduct a surrender charge. An owner generally may be permitted to withdraw certain limited amounts free of surrender charge. The surrender charge for PFL Policies as a percentage of premium payments declines from 8% in years one, two and three to 0% in year nine and thereafter. The surrender charge for Transamerica Policies as a percentage of premium payments declines from 8% in years one and two to 0% in year seven and thereafter. The surrender charge for Western Reserve Policies as a percentage of premium payments declines from 8% in years one, two, and three to 0% in year nine and thereafter.

14. The policies offered by the PFL Account include a Nursing Care and Terminal Condition Withdrawal Option, where PFL does not deduct a withdrawal charge on a surrender or withdrawal if the Owner has been (or whose spouse has been): (i) hospitalized or confined to a nursing facility for 30 consecutive days, or (ii) diagnosed with a terminal condition and has a life expectancy of 12 months or less. This benefit is also available to an annuitant and his or her spouse, if the owner is not a natural person.

15. The policies offered by the PFL Account also include an Unemployment Waiver, where PFL will not deduct a surrender charge if the owner or his or her spouse is unemployed. To qualify, the owner (or spouse) must have been: (i) Employed full time for at least two years prior to becoming unemployed, (ii) employed full time at the time PFL issued the Policy, and (iii) unemployed for at least 60 days at a time he or she makes the withdrawal.

16. The policies offered by the Transamerica Account offer a living benefits rider where, subject to certain conditions, Transamerica will not deduct a surrender charge if: (i) An owner receives extended medical care in a qualifying institution for at least 60 days, (ii) if an owner receives medically required hospice or in-home care for at least 60 consecutive days, or (iii) an owner is diagnosed as terminally ill and has a life expectancy of 12 months or less.

17. Subject to certain conditions, Western Reserve will waive the withdrawal charge on surrenders or withdrawals if an owner (or joint owner) has been confined to a nursing care facility for at least 30 consecutive days and the confinement began after the policy date. Western Reserve will waive the surrender charge only for a surrender or withdrawal made during the confinement or within two months after the confinement ends. Western Reserve also waives the surrender charge if an owner has a non-correctable medical condition which will result in death within 12 months from the date Western Reserve receives a written statement of such condition.

18. Policies issued by the PFL Account have a death benefit equal to the greatest of: (i) the policy value on the date PFL receives the required information; (ii) the cash value on the PFL receives the required information, or (iii) the guaranteed minimum death benefit. The policy value is the total amount in the Policy but does not reflect the application of any excess interest adjustment with respect to the fixed account, or any surrender charge, at the time of death. The cash value is the policy value, plus or minus any

applicable excess interest adjustment, less any applicable surrender charge. The policy date is the date on which PFL credits the initial premium payment to the Policy. The guaranteed minimum death benefit is a step-up death benefit equal to the largest policy value (minus any bonus credits credited within 12 months of the payment of the death benefit) on the policy date or any policy anniversary before the owner reaches age 76, plus any premium payments an owner made since then (minus any bonus credits credited within 12 months of the payment of the death benefit), minus any adjusted partial withdrawals PFL paid an owner since then. The step-up death benefit is not available if the owner or the annuitant is 75 or older on the policy date. In those instances, the guaranteed minimum death benefit will equal total premium payments, less any adjusted partial withdrawals as of the date of death. In this case, the guaranteed minimum death benefit will not include any bonus credit. Future Policies may provide different benefits, but such benefits will always be at least the cash value.

19. The policies issued by the Transamerica Account have a death benefit equal to the greater of: (i) the account value minus any bonus credits less than 12 months old at the time of payment of the death benefit; or (ii) premium payments minus partial withdrawals and any premium taxes (not taking into account any bonus credits). If death occurs after an owner's or joint owner's 80th birthday, the death benefit will equal account value minus any bonus credits less than 12 months old at the time of payment of the death benefit. Transamerica also offers a guaranteed minimum death benefit rider, under which the death benefit equals the greater of: (i) the account value, minus any bonus credits less than 12 months old at the time of payment of the death benefit: (ii) premium payments minus the proportion of partial withdrawals taken and any premium taxes (not taking into account any bonus credits); or (iii) the highest account value on any policy anniversary prior to the earlier of the owner's or joint owner's 85th birthday, plus premium payments made, minus the proportion of partial withdrawals taken and premium taxes since that anniversary, less any bonus credits credited within 12 months of the payment of the death benefit. If death occurs after an owner's or joint owner's 80th birthday, the death benefit under the rider will equal the greater of (i) or (iii) above.

20. The policies issued by the WRL Account offer both a standard death benefit and (for an additional charge) a compounding minimum death benefit. The standard death benefit equals the greatest of (i) the annuity value (that is, the total amount in a Policy) on the valuation day on which Western Reserve receives proof of the annuitant's death and the beneficiary's election regarding payment (the ''death report day'') reduced by the amount of any bonus credits credited to the annuity value during the 12 month period before the death report day; (ii) total premium payments as of the death report day (not including any bonus credits), less partial withdrawals; or (iii) an annual step-up. The annual set-up is equal to the highest annuity value on any policy anniversary before the annuitant's 81st birthday. If the policy anniversary with the highest annuity value occurs during the 12 month period before the death report day, then the highest annuity value will be reduced by the amount of any bonus credits credited to the annuity value from the beginning of this 12 month period to the death report date. The highest annuity value will be increased for premium payments made (but not increased for the bonus credits applicable to those premiums), and decreased for any adjustment partial withdrawals following the policy anniversary on which the highest annuity value occurs. The compounding minimum death benefit will pay a benefit equal to the greater of (i) the standard death benefit; or (ii) total premium payments made plus the bonus credit corresponding to the initial premium payment only, plus interest at an effective annual rate of 5% (in most states) from the date of the premium payment to the date of death, less adjusted partial surrenders (including interest on any partial surrender at the 5% rate from the date of the partial surrender to the date of death).

21. For the PFL Policies, the amount applied to the annuity payments is the Policy or account value, increased or decreased by any applicable excess interest adjustments and minus any applicable premium taxes and minus any bonus credits PFL credited within 12 months of the annuity commencement date. Transamerica may deduct a surrender charge on annuitizations before the first contract anniversary (or if the payment option does not involve life contingencies). Western Reserve will apply the annuity value on the maturity date, minus any premium tax that may apply. PFL and Western Reserve do not apply a surrender charge to annuity payments.

22. The policies issued by the PFL Account and WRL Account offer an optional benefit which assures an owner of a minimum level of income on annuitization in the future by guaranteeing a minimum annuitization value at certain times, based on the policy value at the date the rider is issued. Transamerica plans to offer this option in the future. The Companies may also offer owners a dollar cost average program, an asset rebalancing program, and a systematic payout option.

23. The Companies deduct various fees and charges, which may include a daily mortality and expense risk fee; a daily administrative charge; an annual service or contract charge; premium taxes; surrender charges (contingent deferred sales loads); and fees for optional benefits or riders. The Companies do not assess a specific charge for the bonus credit. The Companies expect to use a portion of the mortality and expense risk charge, the administrative fee, and/or the surrender charge to pay for the bonus credit.

24. Applicants seek exemption pursuant to Section 6(c) of the 1940 Act from Sections 2(a)(32), 22(c), and 27(i)(2)(A) of the 1940 Act and Rule 22c–1 thereunder to the extent necessary to permit PFL, Transamerica, and Western Reserve to issue Policies that permit recapture of bonus credits under certain circumstances. PFL seeks to recapture the bonus credit when: (i) an owner exercises the ''free-look'' option available under the Policies; (ii) an owner exercises the Nursing Care and Terminal Condition Withdrawal Option or the Unemployment Waiver within one year from the time the credit is applied; (iii) PFL pays a death benefit within one year from the time it applies the credit; or (iv) an owner annuitizes within one year from the date the bonus credit is applied. Transamerica seeks to recapture the bonus credit when: (i) an owner exercises the ''free-look'' option under the Policies; (ii) an owner exercises the living benefits rider within one year from the time Transamerica applies the credit; or (iii) Transamerica pays a death benefit within one year from the time it applies the credit. Western Reserve seeks to recapture the bonus credit when: (i) an owner exercises the ''free-look'' option available under the Policies; (ii) an owner exercises the Nursing Care/ Terminal Condition option within one year from the time the credit is applied; or (iii) Western Reserve pays a death benefit within one year from the time it applies the credit.

Applicants' Legal Analysis

1. Section 6(c) of the 1940 Act authorizes the Commission, by order upon application, to conditionally or unconditionally grant an exemption from any provision, rule or regulation of the Act to the extent that the exemption is necessary or appropriate in the public interest and consistent with the protection of investors and the purposes fairly intended by the policy and provisions of the Act. Because the provisions may be inconsistent with a recapture of a bonus credit, Applicants request exemptions for the Policies described herein, and for Future Policies that are substantially similar in all material respects to the Policies, from Sections 2(a)(32), 22(c) and 27(i)(2)(A) of the 1940 Act, and Rule 22c–1 thereunder, pursuant to Section 6(c), to the extent necessary to recapture the bonus credit applied to a premium payment in the instances described above. Applicants seek exemptions in order to avoid any questions concerning the Policies' compliance with the 1940 Act and rules thereunder. Applicants assert that the recapture of the bonus credit is necessary or appropriate in the public interest and consistent with the protection of investors and purposes fairly intended by the policy and provisions of the 1940 Act.

2. Subsection (i) of Section 27 of the 1940 Act provides that Section 27 does not apply to any registered separate account funding variable insurance contracts, nor to the sponsoring insurance company and principal underwriter of such account, except as provided for in paragraph (2) of the subsection. Paragraph (2), in pertinent part, makes it unlawful for any registered separate account funding variable insurance contracts, or for the sponsoring insurance company of such account, to sell any such contract unless such contract is a redeemable security. Section 2(a)(32) of the 1940 Act defines ''redeemable security'' as any security under the terms of which the holder, upon its presentation to the issuer, is entitled to receive approximately his proportionate share of the issuer's current net assets, or the cash equivalent thereof. To the extent that the bonus credit recapture might be seen as a discount from the net asset value, or might be viewed as resulting in the payment to any owner of less than the proportionate share of the issuer's net assets, the bonus credit recapture would trigger the need for relief absent some exemption from the 1940 Act.

3. Applicants state that the Policies are designed to be long-term investment vehicles. In undertaking this financial obligation, each Company contemplates that an owner will retain a Policy over an extended period, consistent with the long-term nature of the Policies. Applicants further state that each Company designed their product so that it would recover its costs (including the bonus credit) over an anticipated duration while a Policy is in force. If an owner withdraws his or her money from a Policy before this anticipated period, Applicants assert that a Company must recapture the bonus credit in order to avoid a loss.

4. Applicants assert that the recapture of a bonus credit does not violate Section 2(a)(32) of the 1940 Act. The Applicants assert that the bonus recapture provisions in the Policies do not deprive the owner of his or her proportionate share of the issuer's current net assets. An owner's right to the bonus credit will vest in full one year after a Company applies the bonus credit. Until that time, Applicants assert that a Company retains the right and interest in the dollar amount of any unvested bonus credit amount. Thus, Applicants argue that when a Company recaptures a bonus credit, it is only retrieving its own assets, and because an owner's interest in the bonus credit is not vested, such owner would not be deprived of a proportionate share of the Account's assets (the issuer's current net assets) in violation of Section 2(a)(32). Therefore, Applicants assert that such recapture does not reduce the amount of each Account's current net assets an owner would otherwise be entitled to receive. However, to avoid uncertainty as to full compliance with the 1940 Act, the Applicants request an exemption from the provisions of Sections 2(a)(32) and 27(i)(2)(A) to the extent deemed necessary to permit them to recapture the bonus credit under the Policies and Future Policies.

5. Applicants further contend that it would be inherently unfair to allow an owner exercising the free-look privilege in a Policy to retain the bonus credit when returning a Policy for a refund after a period of only a few days (usually 10 or less). If a Company could not recapture the bonus credit, individuals might purchase a Policy with no intention of retaining it, and simply return for a quick profit. By recapturing the bonus credit, a Company will prevent such individuals from doing so.

6. Furthermore, Applicants assert that a Company's recapture of the bonus credit is designed to prevent anti-selection against that Company. Applicants state that the risk of anti-selection is that an owner could make significant premium payments into a Policy solely in order to receive a quick profit from the credit. Applicants state that each Company generally protects itself from this kind of anti-selection, and recovers its costs in situations where an owner withdraws his or her money early in the life of a Policy, by imposing a surrender charge of up to 8%. However, where an owner withdraws his money pursuant to a ''free-look'' provision or an unemployment or nursing home waiver, or annuitizes a Policy (or dies), a Company generally does not apply this charge. Applicants state that each Company is only seeking to recapture the bonus credit (which is less than the surrender charge under the Policies) in the circumstances where it does not apply the surrender charge.

7. Applicants assert that the bonus credit provisions are generally favorable to the owners. As any earnings on a bonus credit applied would vest immediately with an owner, likewise any losses on the bonus credit would also vest immediately with an owner. The bonus credit recapture provisions do not diminish the overall value of the bonus credit. However, to avoid uncertainty as to full compliance with the 1940 Act, Applicants request an exemption from the provisions of sections 2(a)(32) and 27(i)(2)(A) to the extent deemed necessary to permit them to recapture the bonus credit under the Policies and Future Policies.

8. Section 22(c) of the 1940 Act states that the Commission may make rules and regulations applicable to registered investment companies and to principal underwriters of, and dealers in, the redeemable securities of any registered investment company to accomplish the same ends as contemplated by Section 22(a) of the 1940 Act. Rule 22c–1, promulgated under Section 22(c) of the 1940 Act, in pertinent part, prohibits a registered investment company issuing a redeemable security (and a person designated in such issuer's prospectus as authorized to consummate transactions in such security, and a principal underwriter of, or dealer in, any security) from selling, redeeming, or repurchasing any such security except at a price based on the current net asset value of such security.

9. Applicants state that a Company's addition of the bonus credit might arguably be viewed as resulting in an owner purchasing a redeemable security for a price below the current net asset value. Further, by recapturing the bonus credit, a Company might arguably be redeeming a redeemable security for a price other than one based on the current net asset value of an Account. Applicants assert that the bonus credit

does not violate Section 22(c) and Rule 22c–1. Applicants further state that an owner's interest in his or her policy value or in an Account would always be offered at a price next determined on the basis of net asset value and that the granting of a bonus credit does not reflect a reduction of that price. Applicants state that the Companies will purchase with their own general account assets an interest in an Account equal to the bonus credit. Applicants assert that because the bonus credit will be paid out of the Company assets, not Account assets, no dilution will occur as a result of the credit.

10. Applicants argue that the recapture of the bonus credit does not involve either of the evils that the Commission intended to eliminate or reduce with Rule 22c–1. The Commission's stated purpose in adopting Rule 22c–1 was to avoid or minimize: (i) dilution of the interests of other security holders; and (ii) speculative trading practices that are unfair to such holders. Applicants assert that the proposed recapture of the bonus credit does not pose such threat of dilution. The bonus credit recapture will not alter an owner's net asset value. Each Company will determine an owner's net cash surrender value under a Policy in accordance with Rule 22c–1 on a basis next computed after receipt of an owner's request for surrender (likewise, the calculation of death benefits and annuity payment amounts will be in full compliance with the forward pricing requirement of Rule 22c–1). The amount recaptured will equal the amount of the bonus credit that a Company paid out of its general account assets. Although an owner will retain any investment gain attributable to the bonus credit, a Company will determine the amount of such gain on the basis of the current net asset value of a sub-account. Applicants further assert that the credit recapture does not create the opportunity for speculative trading calculated to take advantage of backward pricing.

11. Applicants assert that Rule 22c–1 and Section 22(c) should have no application to the bonus credit, as neither of the harms that Rule 22c–1 was designed to address are found in the recapture of the bonus credit. However, to avoid uncertainty as to full compliance with the 1940 Act, the Applicants request an exemption from the provisions of Section 22(c) and Rule 22c–1 to the extent deemed necessary to permit them to recapture the bonus credit under the Policies and Future Policies.

12. Applicants argue that a Company should be able to recapture such bonus credit to protect itself from investors wishing to use the Policy as a vehicle for a quick profit at a Company's expense, and to enable a Company to limit potential losses associated with such bonus credit.

13. Applicants request exemptions from Sections 2(a)(32), 22(c), and 27(i)(2)(A) of the 1940 Act and Rule 22c–1 thereunder, to the extent necessary to permit the Applicants to recapture the bonus credit applied to a premium payment in the circumstances described above. Applicants assert that additional requests for exemptive relief would present no issues under the 1940 Act not already addressed herein. Applicants state that if the Applicants were to repeatedly seek exemptive relief with respect to the same issues addressed herein, investors would not receive additional protection or benefit, and investors and the Applicants could be disadvantaged by increased costs from preparing such additional requests for relief. Applicants argue that the requested class relief is appropriate in the public interest because the relief will promote competitiveness in the variable annuity market by eliminating the need for the Companies or their affiliates to file redundant exemptive applications, thereby reducing administrative expenses and maximizing efficient use of resources.

Conclusion

For the reasons set forth above, Applicants believe that the exemptions requested are necessary and appropriate in the public interest and consistent with the protection of investors and the purposes fairly intended by the policy and provisions of the 1940 Act, and consistent with and supported by Commission precedent.

For the Commission, by the Division of Investment Management, under delegated authority.

Margaret H. McFarland,

Deputy Secretary.

[FR Doc. 00–24127 Filed 9–19–00; 8:45 am]

BILLING CODE 8010–01–M

SECURITIES AND EXCHANGE COMMISSION

Sunshine Act Meeting

FEDERAL REGISTER CITATION OF PREVIOUS ANNOUNCEMENT: [To Be Published]

STATUS: Open Meeting.

PLACE: 450 Fifth Street, NW., Washington, DC.

DATE PREVIOUSLY ANNOUNCED: To be published.

CHANGE IN THE MEETING: Additional Meeting.

An additional open meeting will be held on Thursday, September 21, 2000 at 8:30 a.m., in Room 1C30.

Commissioner Hunt, as duty officer, determined that no earlier notice thereof was possible.

The subject matter of the open meeting scheduled for Thursday, September 21, 2000 at 8:30 a.m. will be:

The Commission will hold public hearings on its proposed rule amendments concerning auditor independence. The purpose of the hearings is to give the Commission the benefit of the views of interested members of the public regarding the issues raised and questions posed in the Proposing Release (33–7870). For further information, contact: John M. Morrissey, Deputy Chief Accountant or W. Scott Bayless, Associate Chief Accountant, Office of the Chief Accountant at (202) 942–4400.

At times, changes in Commission priorities require alterations in the scheduling of meeting items. For further information and to ascertain what, if any, matters have been added, deleted or postponed, please contact:

The Office of the Secretary (202) 942–7070.

Dated: September 14, 2000.

Jonathan G. Katz,

Secretary.

[FR Doc. 00–24194 Filed 9–15–00; 5:04 pm]

BILLING CODE 8010–01–M

SECURITIES AND EXCHANGE COMMISSION

Sunshine Act Meeting

FEDERAL REGISTER CITATION OF PREVIOUS ANNOUNCEMENT: 65 FR 56351.

STATUS: Open Meeting.

PLACE: 450 Fifth Street, NW., Washington, DC.

DATE PREVIOUSLY ANNOUNCED: September 18, 2000.

CHANGE IN THE MEETING: Time Change.

The open meeting scheduled for Wednesday, September 20, 2000 at 9 a.m., has been changed to Wednesday, September 20, 2000, at 8:30 a.m.

At times, changes in Commission priorities require alternations in the scheduling of meeting items. for further information and to ascertain what, if any, matters have been added, deleted or postponed, please contact:

The Office of the Secretary at (202) 942–7070.

Dated: September 15, 2000.

Jonathan G. Katz,

Secretary.

[FR Doc. 00–24195 Filed 9–15–00; 5:09 pm]

BILLING CODE 8010–01–M

SECURITIES AND EXCHANGE COMMISSION

Sunshine Act Meeting

FEDERAL REGISTER CITATION OF PREVIOUS ANNOUNCEMENT: 65 FR 56351.

ACTION: Federal Register Citation of Previous Announcement: 65 FR 56351.

STATUS: Closed Meeting.

PLACE: 450 Fifth Street, NW., Washington, DC.

DATE PREVIOUSLY ANNOUNCED: September 18, 2000.

CHANGE IN THE MEETING: Time Change.

The closed meeting scheduled for Thursday, September 21, 2000 at 11 a.m., has been changed to Friday, September 22, 2000, at 11 a.m.

At times, changes in Commission priorities require alterations in the scheduling of meeting items. For further information and to ascertain what, if any, matters have been added, deleted or postponed, please contact:

The Office of the Secretary at (202) 942–7070.

Dated: September 15, 2000.

Jonathan G. Katz,

Secretary.

[FR Doc. 00–24196 Filed 9–15–00; 5:00 pm]

BILLING CODE 8010–01–M

SECURITIES AND EXCHANGE COMMISSION

[Release No. 34–43285; File No. SR–CBOE–00–01]

Self-Regulatory Organizations; Order Approving a Proposed Rule Change by the Chicago Board Options Exchange, Inc. Relating to the Prohibition on the Entry of Certain Electronically Generated Orders Into the Exchange's Order Routing System

September 12, 2000.

I. Introduction

On February 9, 2000, the Chicago Board Options Exchange, Inc. (''CBOE'' or ''Exchange'') filed with the Securities and Exchange Commission (''SEC'' or ''Commission''), pursuant to Section 19(b)(1) of the Securities Exchange Act of 1934 (''Act''),[1] and Rule 19b–4 thereunder,[2] a proposed rule change governing certain electronically generated orders. On March 6, 2000, April 28, 2000, and July 10, 2000, the CBOE filed Amendment Nos, 1, 2, and 3, respectively to the proposal.[3] Notice of the proposal was published in the **Federal Register** on August 4, 2000.[4] The Commission received one comment letter regarding the proposal.[5] This order approves the proposed rule change, as amended.

II. Description of the Proposal

New Rule 6.8A (''Rule'') restricts the entry of certain options orders that are created and communicated electronically, without manual input, into the CBOE's Order Routing System (''ORS''). ORS is the Exchange's automated order trading and routing system comprised of the options order routing system, the Retail Automatic Execution System (''RAES''),[6] the electronic limit order book, and other electronic delivery and acceptance systems and terminals.

The Rule provides that members may not enter nor permit the entry of, orders into ORS if those orders are created and communicated electronically without manual input and if such orders are eligible for execution on RAES at the time that they are sent. To be permitted under the Rule, order entry by public customers or associated persons of members must involve manual input, such as entering the terms of an order into an order-entry screen or manually selecting a displayed order against which an off-setting order should be sent. Members are permitted to communicate to the Exchange orders manually entered by customers into front-end communication systems such as Internet gateway and online networks.

The Rule clarifies that an order is eligible for execution on RAES if: (1) its size is equal to or less than the maximum RAES order size for the particular option series; (2) the order is marketable or is tradable pursuant to the RAES auto step-up feature at the time it is sent; and (3) the order has either no contingency or has a contingency that is accepted for execution by RAES. As defined in the Rule, a marketable order is a market order or a limit order in which the specified price to sell is below or at the current bid, or the specified price to buy is above or at the current offer. An order is tradable pursuant to the RAES auto step-up feature if the appropriate CBOE Floor Procedure Committee (''FPC'') has designated the class as an auto step-up class and if the National Best Bid or Offer (''NBBO'') for the particular series is reflected by the current best bid or offer in another market by no more than the step-up amount as defined in Interpretation .02 of CBOE Rule 6.8.

The proposal is designed to permit CBOE market makers who participate in RAES to compete more effectively with customers who are equipped with electronic systems. Specifically, the Exchange represents that its business model depends upon market makers for competition and liquidity. If further represents that public customer orders submitted to the CBOE are provided with certain benefits pursuant to various rules of the Exchange, including Rule 6.8 (RAES Operations), Rule 6.45 (Priority of Bids and Offers), Rule 7.4 (Obligations for Orders), and Rule 8.51 (Trading Crowd Firm Disseminated Market Quotes). The Exchange represents that allowing electronically generated and communicated customer orders to be routed directly to ORS and RAES would give customers with such electronic systems a significant advantage over market makers. The Exchange believes that this could undercut its business model. The Exchange notes that under the proposed rule change, computer generated orders can still be sent for execution on the Exchange; however, they may not be sent for execution through ORS.

[1] 15 U.S.C. 78s(b)(1).

[2] 17 CFR 240.19b–4.

[3] In Amendment No, 2, the Exchange proposed to create new Rule 6.8A, *Electronically Generated and Communicated Orders,* rather than including the proposed rule language as a subsection of CBOE Rule 6.8, *RAES Operations.* In Amendment No. 2, the Exchange proposed to prohibit electronically generated orders only if they were eligible for execution on the Exchange's Retail Automatic Execution System (''RAES''). In Amendment No. 3, the Exchange revised the proposed rule language to clarify that electronically created orders will be prohibited from entry into the Order Routing System (''ORS'') if they are eligible for execution on RAES at the time they are sent to the Exchange. Amendment No. 3 also clarified the types of orders that are considered to be eligible for execution on RAES at the time they are sent. *See* letters from Timothy Thompson, Assistant General Counsel, Legal Department, CBOE, to Nancy J. Sanow, Assistant Director, Division, Commission, dated March 3, 2000, April 27, 2000, and July 6, 2000. The modifications made by these amendments are incorporated in the description of the proposal in Section II below.

[4] Securities Exchange Act Release No. 43087 (July 28, 2000), 65 FR 48033.

[5] *See* Section III below for a description of the comment letter.

[6] RAES automatically executes customer market and marketable limit orders that fall within designated order size parameters. All designated primary market makers (''DPMs'') of a particular option class are required to log on RAES for that class; other market makers who trade that class on the floor may log on RAES but are not required to do so. When RAES receives an order, the system automatically attaches to the order its execution price, generally determined by the prevailing market quote at the time of the order's entry to the system, and a participating market maker will be designated as the counterparty on the trade. *See* CBOE Rule 6.8(a)(ii).

CBOE member firms and customers who are not located on the trading floor may send option orders to the trading floor in various ways. First, a customer in some option classes may telephone an order directly to a floor broker in the trading crowd, provided the firm taking the order complies with all applicable rules for handling the customer order. In other trading crowd, a member firm representative or a customer may telephone an order into a member firm booth on the trading floor. From here the order may be taken manually into the proper trading crowd and represented; alternatively, it may be sent electronically from the booth to a floor broker in the trading crowd who will represent it. A member firm representative may also send an order to the floor of the Exchange pursuant to that firm's proprietary order routing network. The order would then be routed to the trading crowd in one of the two ways described above. Finally, a member firm may send an order to the Exchange through its interface with ORS. Eligible orders sent through ORS may be: (1) automatically executed against orders in the limit order book; (2) placed in the limit order book; (3) automatically executed via RAES; or (4) routed to a Public Access Routing (''PAR'') terminal in the trading crowd.

Prior to adoption of the new Rule, electronically generated orders could be sent to the CBOE in any of the ways described above. Electronically generated orders sent to ORS would be routed to RAES for automatic execution if those orders were otherwise eligible for execution on RAES. Under the new Rule, however, electronically generated orders that are eligible for execution on RAES at the time they are sent may *not* be routed to ORS. These orders, however, may be sent to the trading floor for execution as otherwise described above, *i.e.*, by telephone or through a member firm's proprietary order routing system.

III. Summary of Comments

The Commission received one comment letter regarding the proposed rule change.[7] That letter, from Susquehanna Investment Group (''Susquehanna''), strongly supported approval of the proposal. Susquehanna stated that the Rule will enable CBOE market makers to compete more effectively by reducing their exposure to electronically generated orders. Susquehanna also stated that the Rule will promote a level playing field with the International Stock Exchange LLC (''ISE'') because of its similarly to Rule 717(f) of the ISE. Finally, Susquehanna asked the Commission to clarify that orders entered with a single keystroke are subject to the prohibition against entry into ORS. Susquehanna expressed concern that professional traders may attempt to circumvent the Rule by ''having a person enter a keystroke to send an electronically generated order * * * so that the order can be denied 'manual'.''[8] Susquehanna believes that such a practice could undermine the intent of the proposal.

IV. Discussion

After careful review, the Commission finds that the proposed rule change is consistent with the provisions of the Act applicable to a national securities exchange, particularly Section 6(b)(5)[9] and Section 6(b)(8)[10] of the Act, and the rules and regulations thereunder.[11]

The Commission has carefully considered whether the Rule inhibits competition between the CBOE's automated customers and those who do not employ automated means of order entry. The Commission notes that in the equity markets, for example, limit orders from active customers have been a valuable source of quote competition. Nonetheless, the Commission recognizes that the CBOE's business model depends on market makers for competition and liquidity. Allowing electronic order entry into ORS could give automated customers a significant advantage over market makers. This could undercut the CBOE's business model. Moreover, the CBOE's prohibition against entry of electronically entered orders that are eligible for execution on RAES still allows non-marketable limit orders that improve the CBOE's displayed bid and offer to be entered into ORS.

The Commission believes that it is not inconsistent with the purposes of the Act for the CBOE to address the risk to its market makers posed by rapid entry of electronically generated orders that are designed to take advantage of temporary anomalies between current options prices and the value of the underlying stock or index. In this regard, the Commission notes that it has approved a similar rule for the first fully automated options exchanges, the ISE. In approving the application of the ISE for registration as a national securities exchange, the Commission explicitly recognized that the ISE's business model ''depends on market makers for competition and liquidity.''[12] Recognizing that allowing electronic order entry into the ISE could ''give automated customers a significant advantage over [the ISE's] market makers,'' the Commission stated that it was unable to conclude that the limitation violated the statutory requirements.[13]

ISE Rule 717(f) regarding computer-generated orders specifically permits the entry of computer-generated non-marketable limit orders that improve the best price available on the ISE. This provision is designed to accommodate non-marketable limit orders because these orders serve to increase competition and improve quotes. Similarly, non-marketable limit orders that improve the best price on the CBOE will not be subject to the Rule's prohibition against entry of computer-generated orders into ORS because that prohibition applies only to orders that are eligible for execution on RAES at the time they are sent. Under the Rule, an order is eligible for execution on RAES if (among other criteria) ''the order is marketable or is tradable pursuant to the RAES auto step-up feature at the time it is sent.'' The Rule defines ''marketable order'' as a market order or a limit order in which the specified price to sell is below or at the current bid, or the specified price to buy is above or at the current offer. Non-marketable limit orders that improve the CBOE market, on the other hand, are orders priced *above* the correct bid and *below* the current offer. These non-marketable limit orders will not be excluded from ORS under the rule, but will instead be eligible for entry into ORS. Once entered into ORS, they will be routed to a member firm booth on the trading floor or to a PAR terminal in the trading crowd. Once the order arrives at the crowd, a market maker will execute the order or route it to the limit order book.

[7] Letter from Joel Greenberg, Managing Director, Susquehanna Investment Group, to Jonathan G. Katz, Secretary, Commission, dated August 29, 2000.

[8] *Id.* at 4.

[9] 15 U.S.C. 78f(b)(5). Section 6(b)(5) requires that the rules of a national securities exchange be designed to, among other things, promote just and equitable principles of trade, remove impediments to and perfect the mechanism of a free and open market, and, in general, to protect investors and the public interest. It also requires that those rules not be designed to permit unfair discrimination between customers, issuers, brokers, or dealers.

[10] 15 U.S.C. 78f(b)(8). Section 6(b)(8) requires that the rules of the exchange do not impose any burden on competition not necessary or appropriate in furtherance of the purposes of the Act.

[11] In approving this proposal, the Commission has considered the proposed rule's impact on efficiency, competition, and capital formation. 15 U.S.C. 78c(f).

[12] Securities Exchange Act Release No. 42455 (February 24, 2000), 65 FR 11401 (March 2, 2000). In approving the ISE's application for exchange registration, the Commission also approved several ISE rules, including Rule 717(f) regarding entry of computer-generated orders.

[13] *Id.*

Although the ISE and CBOE rules are not identical, both ISE Rule 717(f) and CBOE Rule 6.8A permit non-marketable limit orders that improve the price to be sent to the exchange and routed to the relevant trading mechanism for execution. As it stated with respect to its approval of ISE Rule 717(f), the Commission is unable to conclude that the new CBOE Rule violates any statutory requirements.

In its comment letter, Susquehanna asked the Commission to clarify that orders entered with a single keystroke are subject to the Rule.[14] Susquehanna expressed concern that professional traders may attempt to circumvent the Rule by ''having a person enter a keystroke to send an electronically generated order . . . so that the order can be deemed ''manual'.'' [15] In response, the CBOE stated that it agrees with Susquehanna that this practice could potentially undermine the purpose of the Rule. In such a case, the CBOE believes that it can effectively address the issue by adding an Interpretation to Rule 6.8A that clarifies the scope of the Rule.[16] Such an Interpretation would be subject to the filing requirements of Section 19(b) of the Act.

In sum, the Commission notes that the Rule does not prohibit electronically generated orders from being sent to the CBOE; rather, it merely prevents them from being entered into ORS. Thus, electronically generated orders will be routed to the trading crowd and represented in open outcry. Once the order arrives at the trading crown, CBOE rules require that the order be executed at the CBOE's displayed bid or offer at the time the order is represented in the crowd.[17] Depending upon the circumstances, the order may be filled at a price better than the CBOE's displayed bid or offer. Therefore, although electrically generated orders will not be eligible for automatic execution on RAES under the Rule, they will still be entitled to receive an execution price that is as good as or better than the CBOE's displayed bid or offer.

V. Conclusion

For the reasons discussed above, the Commission finds that the proposal is consistent with the Act and the rules and regulations thereunder.

[14] *Supra* note 7, at 4.

[15] *Id.*

[16] Telephone conversation between Timothy Thompson, Assistant General Counsel, Legal Department, CBOE, and Gordon Fuller, Special Counsel, Division of Market Regulation, Commission (September 10, 2000).

[17] *See* CBOE Rule 8.51.

It Is Therefore Ordered, pursuant to Section 19(b)(2) of the Act, that the proposed rule change (SR–CBOE–00–01), as amended, adopting Rule 6.8A, is approved.

For the Commission, by the Division of Market Regulation, pursuant to delegated authority.[18]

Margaret H. McFarland

Deputy Secretary.

[FR Doc. 00–24128 Filed 9–19–00; 8:45 am]

BILLING CODE 8010–01–M

SECURITIES AND EXCHANGE COMMISSION

[Release No. 34 43288; File No. SR NYSE 99 50]

Self-Regulatory Organizations; New York Stock Exchange, Inc.; Order Approving Proposed Rule Change Relating to Continued Listing Standards

September 13, 2000.

I. Introduction

On December 21, 1999, the New York Stock Exchange, Inc. (''NYSE'' or ''Exchange'') filed with the Securities and Exchange Commission (''SEC'' or ''Commission'') pursuant to Section 19(b)(1) of the Securities Exchange Act of 1934 (''Act''),[1] and Rule 19b–4 thereunder,[2] a proposed rule change to revise the Exchange's continued listing standards. On March 27, 2000, the Exchange submitted Amendment Nos. 1 and 2 to the proposed rule change.[3] The proposed rule change was published for comment in the **Federal Register** on April 7, 2000.[4] No comments were received on the proposal. This order approves the NYSE's proposal, as amended.

II. Description of The Proposal

The proposal would modify several of the Exchange's existing continued listing criteria.[5] First, the Exchange proposes to define the term ''market capitalization'' in so far as it applies to the continued listing standards. Second, the Exchange proposes to clarify what is meant by ''shareholders equity'' in the context of partnerships. Third, the Exchange proposes to specify a set of circumstances in which it will exercise some discretion in determining the listing status of a company that has filed or has announced an intent to file for bankruptcy, and that is below the financial continued listing standards specified in Para. 802.01B of the *Listed Company Manual.*

(A) Market Capitalization Definition

The proposal specifies that for purposes of its continued listing standards, the term ''market capitalization'' will encompass all common stock outstanding, whether publicly traded or not, so long as the Exchange is able to accurately attribute a value to it [6] on the day the market capitalization is calculated. Thus, if such a security is publicly traded common stock, the closing price from the previous trading day will be the price used for purposes of the calculation.

In addition, the proposal would permit the Exchange to provide its staff with the discretion to evaluate the capital structure of the issuer and include common stock that would be issued upon conversion of an instrument that constitutes the issuer's capital. Traditional debt, related to financing activities, will be excluded. Similar to the procedure discussed above, but for convertible publicly-traded securities other than common stock, the applicable price will be the closing price of the common stock into which it is convertible from the previous trading day.[7]

[18] 17 CFR 200.30–3(a)(12).

[1] 15 U.S.C. 78s(b)(1).

[2] 17 CFR 240.19b–4.

[3] In Amendment No. 1, the NYSE made several clarifications to the intent and proposed interpretation of the proposed rule change. The Exchange expanded its discussion regarding the use of convertible securities in calculating the market capitalization of an issuer, and provided several examples of the proposed rule's application. The Exchange also explained the IRS-related basis for the proposed changes to the calculation of market capitalization for partnerships. Finally, the Exchange clarified that the proposed change to the bankruptcy provision would not restart the eighteen-month clock for an Exchange-approved plan. *See* Letter to Belinda Blaine, Associate Director, Division of Market Regulation (''Division''), SEC, from James E. Buck, Senior Vice President and Secretary, NYSE, dated March 21, 2000 (''Amendment No. 1''). In Amendment No. 2, the Exchange made several technical changes to the rule text which were reflected in the notice. *See* Letter to Belinda Blaine, Associate Director, Division, SEC, from James E. Buck, Senior Vice President and Secretary, NYSE, dated March 24, 2000 (''Amendment No. 2'').

[4] Securities Exchange Act Release No. 42579 (March 27, 2000), 65 FR 18412.

[5] The Exchange recently revised its continued listing standards, and to this point several issues have come to light that necessitate clarification. *See* Securities Exchange Act Release No. 42194 (December 1, 1999), 64 FR 69311 (December 10, 1999).

[6] For example, a privately-held Class B common stock convertible into the listed Class A common stock would be included and valued on an as-converted basis.

[7] For example, if a convertible preferred security trades at $15 and the common stock into which it is convertible trades at $10, the price utilized would be the closing price of the common stock on the previous day (not the higher price of the preferred security) and the market capitalization would be computed on an as-converted basis.

Finally, if the issuer has outstanding privately-held securities, the calculation would be made as described above for convertible securities based upon the previous day's closing price of the publicly-traded security. Thus, a privately held Class B common stock convertible into the publicly-traded Class A would be valued at the price of the Class A. Likewise, a privately-held preferred Series A convertible into the publicly-traded Class A would be valued at the price of the Class A on an as-converted basis.

The proposal would also permit the Exchange to review any applicable conversion restrictions when conducting its market capitalization analysis and factor any such restrictions into the computations as appropriate.

(B) ''Shareholders' Equity'' and ''Market Capitalization'' of Partnerships

The proposal would enable the Exchange to evaluate the formation of the current capital structure of a partnership and, where appropriate, to include other publicly-traded securities in the calculation as a substantial equivalent to common stock. Furthermore, the proposal would amend the stockholders' equity test to clarify that both general and limited partners' capital is the measure for the applicable calculation. The Exchange believes that this clarification is necessary because the concept of ''shareholders' equity'' is not applicable to partnerships. Instead, the notion of capital captures the appropriate analogous concept with respect to partnerships.

The Exchange's intent in codifying the concept of analyzing the creation of the current capital structure stems primarily from the recent expiration of an IRS grandfather provision that resulted in numerous recapitalizations of partnerships. The Exchange believes it is not equitable to penalize these partnerships for restructuring in order to prevent, among other things, double taxation. Thus, for instance, if a holder of $50 of partnership units prior to the conversion were to receive $25 in partnership units and $25 in debt, the ''market value'' of the holdings has not changed and should be calculated at $50 for purposes of determining the continued listing status of the company. Consistent with the principles articulated above, the proposal would require that the non-equity instrument be publicly traded so as to assure the ability to value the instrument.

(C) Companies That Have Filed for Bankruptcy and That Are Below the Financial Continued Listing Criteria

The proposal would give the Exchange the authority to analyze the financial status of companies that have filed or that have announced an intent to file for bankruptcy, and that are also below the Exchange's financial continued listing criteria, on a case-by-case basis.[8] However, if a company has previously filed an Exchange approved plan to meet the Exchange's continued listing standards within 18 months, application of this provision to the company does not restart the 18-month clock. Thus, for instance, a company that declares bankruptcy mid-stream through an Exchange-approved plan would still only have the remainder of the plan to come into compliance. It would not be afforded an additional 18 months, but would incorporate the projected effect of the bankruptcy into its Plan and resubmit it for consideration.

III. Discussion

The Commission finds that the proposal is consistent with the requirements of the Act and the rules and regulations thereunder applicable to a national securities exchange.[9] Specifically, the Commission believes that the proposal is consistent with the requirements of Section 6(b)(5) of the Act[10] in that it clarifies certain maintenance criteria for listing on the NYSE. Listing standards serve as a means for a marketplace to screen issuers and to provide listed status only to bona fide companies with sufficient float, investor based, and trading interest to maintain fair and orderly markets. Once an issuer has been approved for initial listing, the maintenance criteria allow a marketplace to monitor the status of that issuer. Accordingly, the Commission believes that by clarifying the NYSE's continued listing standards, the proposal should prevent fraudulent and manipulative acts and practices, promote just and equitable principles of trade, remove impediments to, and perfect the mechanism of a free and open market and, in general, to protect investors and the public interest.[11]

First, the proposal would elucidate the term ''market capitalization'' as used in the *Listed Company Manual.* The proposal would explain that market capitalization encompasses all common stock outstanding, whether publicly traded or not, so long as the exchange is able to accurately attribute a value to it on the day the market capitalization is calculated. In addition, the proposal would give Exchange staff the discretion to evaluate the capital structure of an issuer and include common stock that would be issued upon conversion of an instrument that constitutes the issuer's capital, excluding traditional debt related to financing activities. Outstanding privately-held securities also would be considered in the market capitalization computation. Finally, the proposal would allow the Exchange to review any applicable conversion restrictions when conducting its market capitalization analysis and factor any such restrictions into the computations as appropriate. The Commission finds that the proposed clarifications and the additional discretion given to the Exchange's staff to evaluate a company's financial status are reasonable. Specifically, the Commission believes that such changes to the Exchange's existing rules are not inappropriate measures for determining a company's market capitalization and should aid the Exchange by producing a more accurate determination of a company's market capitalization.

Second, the proposal would enable the Exchange to evaluate the formation of the current capital structure of a partnership and, where appropriate, include other publicly-traded securities in the calculation as a substantial equivalent to common stock. The proposal would also amend the stockholders' equity test to clarify that both general and limited partners' capital is the measure for the applicable calculation. Given the unique nature of a partnership, the Commission finds that the proposed clarifications explaining which measures should be used to evaluate a partnership's financial status are reasonable.

Finally, the proposal would give the Exchange the authority to analyze the financial status of companies that have filed or that have announced an intent to file for bankruptcy, and that are also below the Exchange's financial continued listing citeria, on a case-by-case basis. However, if a company has previously filed an Exchange-approved

[8] The Exchange represents that there are instances where companies meeting these criteria should be afforded the opportunity to submit a financial plan for evaluation. For instance, a company that is profitable (or that has a positive cash flow), or is demonstrably in sound financial health despite the bankruptcy proceedings, should not be delisted if it can demonstrate that, within 18 months, it will be in compliance with the Exchange's financial criteria.

[9] In approving this Rule, the Commission has considered the proposed rule change's impact on efficiency, competition, and capital formation. 15 U.S.C. 78c(f).

[10] 15 U.S.C. 78f(b)(5).

[11] *Id.*

plan to meet the Exchange's continued listing standards within 18 months, application of this provision to the company does not restart the 18-month clock. The Commission believes that certain flexibility in applying continued listing standards may occasionally be necessary when establishing procedures to uphold the quality of the market. Accordingly, the Commission believes it is reasonable to provide the Exchange with the discretion to evaluate a company's status to prevent premature, automatic delisting of a company otherwise qualified for continued listing. The Commission also believes that it is appropriate that a company that has previously submitted a plan to come into compliance with the Exchange's continued listing criteria not be extended additional time to come into compliance by filing or declaring an intent to file for bankruptcy. The Commission believes that this strikes a reasonable balance between providing companies an opportunity to cure any deficiencies and continue to list on the Exchange and protecting investors and the public interest by not continuing to list companies that cannot meet the Exchange's continued listing criteria during the initial 18 month period.

IV. Conclusion

It is therefore ordered, pursuant to Section 19(b)(2) of the Act,[12] that the proposed rule change (SR–NYSE–99–50), as amended, is approved.

For the Commission, by the Division of Market Regulation, pursuant to delegated authority.[13]

Margaret H. McFarland,

Deputy Secretary.

[FR Doc. 00–24129 Filed 9–19–00; 8:45 am]

BILLING CODE 8010–01–M

[12] 15 U.S.C. 78s(b)(2).

[13] 17 CFR 200.30–3(a)(12).

DEPARTMENT OF STATE

[Public Notice Number 3410]

Shipping Coordinating Committee, Facilitation Committee; Notice of Meeting

The Shipping Coordinating Committee (SHC) will conduct an open meeting at 9:30 a.m. on Wednesday, October 11, 2000, in room 1303 at U.S. Coast Guard Headquarters, 2100 Second Street, SW, Washington, DC, 20593–0001.

The purpose of the meeting is to review the agenda items to be considered at the twenty-eighth session of the Facilitation Committee (FAL 28) of the International Maritime Organization (IMO), which is scheduled for October 30–November 3, 2000, at the IMO headquarters in London. Proposed U.S. positions on the agenda items for FAL 28 will be discussed.

The major items for discussion for FAL 28 will include the following:

—Convention on Facilitation of International Maritime Traffic
—Consideration and adoption of proposed amendments to the Annex to the Convention
—Electronic Data Interchange (EDI) messages for the clearance of ships
—Application of the Committee's Guidelines
—General review of the Convention
—Formalities connected with the arrival, stay and departure of ships
—Formalities related to cargo—Facilitation aspects of the multimodal transport of dangerous goods
—Formalities connected with the arrival, stay and departure of persons—Stowaways
—Facilitation aspects of other IMO forms and certificates
—Ship-port interface
—Technical co-operation sub-program for facilitation

Members of the public may attend this meeting up to the seating capacity of the room.

Interested persons may seek information by writing: Chief, Office of Standards Evaluation and Development, U.S. Coast Guard Headquarters, Commandant (G–MSR), room 1400, 2100 Second Street, SW, Washington, DC, 20593–0001 or by calling Mr. David A. Du Pont at: (202) 267–0971.

Dated: September 13, 2000.

Stephen Miller,

Executive Secretary, Shipping Coordinating Committee, U.S. Department of State.

[FR Doc. 00–24179 Filed 9–19–00; 8:45 am]

BILLING CODE 4710–07–P

DEPARTMENT OF TRANSPORTATION

Office of the Secretary

[Docket No. OST–96–1436]

Docket Management System (DMS)

AGENCY: Office of the Secretary, DOT.

ACTION: Notice requesting comments.

SUMMARY: The Office of the Secretary (OST) is requesting the public to comment on the DOT Docket Management System (DMS). Five years ago, DOT consolidated nine separate docket facilities and converted from a paper-based system to an electronic storage system that we later placed on the Internet. We have continued to make improvements and would like public comment on the current system and our plans for future changes.

DATES: Comments must be submitted by November 20, 2000.

ADDRESSES: Mail or hand deliver comments to the US Department of Transportation, Docket Management Facility, Docket No. OST–96–1436, Room PL–401, 400 Seventh Street, SW., Washington, DC 20590, or submit electronically at http://dmses.dot.gov/submit/. The Docket Management Facility, Room PL–401, is open for public inspection and copying of comments from 9 a.m. to 5 p.m. ET Monday through Friday, except Federal Holidays. See **SUPPLEMENTARY INFORMATION** for additional information on comment acknowledgment and electronic submission.

FOR FURTHER INFORMATION CONTACT: Ms. Dorothy Y. Beard, Chief, Docket Operations and Media Management, SVC–124, (202) 366–5149.

SUPPLEMENTARY INFORMATION:

Background

This notice is intended to inform the public about, and to solicit public comment on, the features and functions of the DMS. Five years ago, DOT consolidated nine separate docket facilities and converted from a paper-based system to an optical ''imaging'' system, which keeps a picture of the document, for more efficient storage, management, and retrieval of docketed information. The new system now provides the public with 24-hour access and electronic filing of comments through the world-wide web. DOT would like to take this opportunity to obtain additional suggestions and feedback on the DMS.

Comment Acknowledgement

Any person wishing acknowledgement of comment receipt should include a self-addressed stamped postcard, or print the acknowledgement page after submitting comments electronically.

Electronic Access and Filing

You may submit comments online through the DMS at *http://dmses.dot.gov/submit/.* Acceptable formats include: MS Word (Versions 95–97), MS Word for Mac (Versions 6–8), Rich Text File (RTF), American Standard Code Information Interchange (ASCII)(TXT), Portable Document Format (PDF), and Word Perfect (WPD) (Versions 7–8). Electronic Submission Help and Guidelines are available under the Help section of the web site.

Consolidated Feedback

The next several paragraphs include consolidated feedback from our on-line feedback forms, previously solicited comments, telephone callers, and frequent customers. Each subject area includes a description and a solution with the anticipated completion time.

DMS Search Function: *http://dms.dot.gov/search/.*

Description: This area received the greatest amount of feedback. The issues raised by commenters concerned the difficulty of locating desired information when searching in the various options provided, determining which docket number to use, and determining which fields to complete to conduct searches. The search area is comprised of three options: (a) Docket Search Form, (b) Docket Number, and (c) Keyword Search. The Docket Search Form is an advanced search option and allows users to search for information in numerous docket and document level data fields. (''Docket'' refers to the file containing all of the documents for a particular rulemaking; and ''Document'' refers to the individual items in the docket, such as a proposed rule or a public comment on the proposed rule.) The Docket Number search is a quick search for users who know the last four digits of the DMS assigned docket number. The Keyword Search is a search that simultaneously searches the data in the Docket Subject, Docket Title, and Document Title fields for key words.

Solution: Completed improvements include search tips, examples, and user-friendly built in help mechanisms. DOT plans to add additional online help, user-friendly drop down menus, date range search capabilities, and more informative search tips with examples to make the search features easier to use. These are planned for implementation by the end of December 2000.

Document Images:

Description: The DMS displays two images for each document processed. The first image type, Tagged Image File Format (TIFF), is a true picture copy of the original document submitted to DOT. The second image type, Portable Document Format (PDF), is a manually converted image using Adobe Capture software to create a smaller text document. Some documents processed prior to 1997 included incomplete TIFF images. The documents displayed a bad link or corrupt file message when displayed in TIFF or PDF formats.

Solution: Completed adjustments to the DMS Web applications eliminated the file access problems. The implementation of a new file integrity check added to the quality assurance application and procedures and eliminates any incomplete or missing images. New documents received electronically are immediately processed into PDF to provide easier access and hard copy documents are typically processed into PDF within one day.

Image Integrity:

Description: The PDF conversion performs an Optical Character Recognition (OCR) process. In cases where the application cannot recognize the text, an image of the text is substituted for the characters which causes subtle variations in the look of the document (*i.e.,* font changes, character bolding, character replacement, etc.). In order to maintain document integrity, DMS provides links to both the ''original'' document in TIFF or one of the Electronic Submission formats. The PDF copy is for convenience and faster downloading.

Solution: Future enhancement plans include an explanation of the PDF issues to provide additional guidance for the Dockets users and explain the technical limitations of the PDF files. A *disclaimer*, telling users to treat the TIFF image as the official record, warns users of PDF limitations. The PDF Image and Text format will be used to provide a text layer for future full text search capabilities and provide a document identical to the original TIFF image. Implementation of more informative explanations of the PDF file technical limitations and improved online help is planned for availability by the end of December 2000.

TIFF Image Byte Size Not Displayed:

Description: The DMS displays the file size (byte size) for both the TIFF and PDF files to assist users in determining download times. On many of the older images the TIFF file size appears as ** and the number of bytes is missing.

Solution: Completed updates to the database now include the byte size of all TIFF images. This provides the user with both the number of pages in the document, and the size of the file.

Viewers and Browser ''Plug Ins'':

Description: Since TIFF is not an image format automatically available with popular internet browsers, installation of a ''plug-in'' is needed to allow image viewing. The Help section of the DMS includes instructions for ''plug-in'' installation and provides links to vendors, but users continue to have problems configuring the image viewers in their browsers. In some instances, networks restrict access to ''configured'' web sites, blocking access to the DMS.

Solution: Implementation is complete for extensive descriptions and online help for configuring browsers for the various viewer configurations. A specific help section (Frequently Asked Questions) is currently available for configuring the Wang Imaging and Kodak viewers that come with Windows 95 (Win95) and Windows NT for popular browsers. Completed improvements to the user interface provide a user-friendly environment to assist in finding the help and FAQ technical support information. Enhancements include instructions for configuring Win95, NT, and additionally to provide links to newer commercial products. Where networks restrict access to ''configured'' web sites, we will continue to work with the network support staff from each organization experiencing the problem to pinpoint the communications failures.

Printing Multiple Documents:

Description: Many users want to review all comments or an entire docket on paper rather than browsing through the web site. The current application requires each individual document to be viewed and printed one at a time, which is very time consuming for large dockets. Printing of the large images is time intensive and sometimes causes severe performance problems.

Solution: A new online Docket printing request form is planned to allow Web users to request DOT staff print all of the documents within a docket. The form will provide the user with the cost for the printing/mailing services and track payment by check. The Dockets printing request form is planned for completion in December 2000.

Reports: http://dms.dot.gov/reports/.

Description: The DMS Web site is configured to only display documents that have a corresponding document image saved into the system. The Daily Filing Report, which lists items filed each day, displays all document records regardless of the availability of the images. Users become frustrated when they see a document on The Daily Filing Report, but can not view the document on the DMS web site, because it is being processed and has not been saved on the system.

Solution: A modification is planned which will enable users to view document data in the data fields of the document record while the image is pending processing. A message display will indicate that document image processing is pending when the image is not available. Implementation is planned for completion by December 2000.

Online Support and Feedback:
http://152.119.239.10/feedback/
http://152.119.239.10/support/

Description: Although there are pull down menus, most users use ''other'' to describe any problems in the support system. Users frequently submit comments via this area instead of in the required Electronic Submission section. Additionally, users call the 800-number rather than submit feedback or support requests online.

Solution: More descriptive categories exist in both the feedback and support systems to adequately describe the problem types. Callers utilizing the 800-number service receive notification of the online capability. We completed changes to the Online Support and Feedback functions in February 2000.

We are soliciting any thoughts or ideas regarding the information provided within this notice. We welcome DMS enhancement suggestions, other potential service areas of interest, and user feedback regarding the need for a DMS training course.

Issued in Washington, DC on September 14, 2000.

Neil R. Eisner,

Assistant General Counsel for Regulation and Enforcement.

[FR Doc. 00–24181 Filed 9–19–00; 8:45 am]

BILLING CODE 4910–62–P

DEPARTMENT OF TRANSPORTATION

Federal Aviation Administration

[Summary Notice No. PE–2000–48]

Petitions for Exemption; Summary of Petitions Received; Dispositions of Petitions Issued

AGENCY: Federal Aviation Administration (FAA), DOT.

ACTION: Notice of petitions for exemption received and of dispositions of prior petitions.

SUMMARY: Pursuant to FAA's rulemaking provisions governing the application, processing, and disposition of petitions for exemption (14 CFR Part 11), this notice contains a summary of certain petitions seeking relief from specified requirements of the Federal Aviation Regulations (14 CFR Chapter I), dispositions of certain petitions previously received, and corrections. The purpose of this notice is to improve the public's awareness of, and participation in, this aspect of FAA's regulatory activities. Neither publication of this notice nor the inclusion or omission of information in the summary is intended to affect the legal status of any petition or its final disposition.

DATES: Comments on petitions received must identify the petition docket number involved and must be received on or before October 11, 2000.

ADDRESSES: Send comments on any petition in triplicate to: Federal Aviation Administration, Office of the Chief Counsel, Attn: Rule Docket (AGC–200), Petition docket No. _____, 800 Independence Avenue, SW., Washington, D.C. 20591.

Comments may also be sent electronically to the following internet address: 9-NPRM-cmts@faa.gov.

The petition, any comments received, and a copy of any final disposition are filed in the assigned regulatory docket and are available for examination in the Rules Docket (AGC–200), room 915G, FAA Headquarters Building (FOB 10A), 800 Independence Avenue, SW., Washington, D.C. 20591; telephone (202) 267–3132.

FOR FURTHER INFORMATION CONTACT: Cherie Jack (202) 267–7271, Forest Rawls (202) 267–8033, or Vanessa Wilkins (202) 267–8029 Office of Rulemaking (ARM–1), Federal Aviation Administration, 800 Independence Avenue, SW., Washington, DC 20591.

This notice is published pursuant to paragraphs (c), (e), and (g) of 11.27 of Part 11 of the Federal Aviation Regulations (14 CFR Part 11).

Issued in Washington, DC, on September 15, 2000.

Donald P. Byrne,

Assistant Chief Counsel for Regulations.

Petitions for Exemption

Docket No.: 30190.

Petitioner: Midwest Express Airlines, Inc.

Section of the FAR Affected: 14 CFR 93.123.

Description of Relief Sought: To permit Midwest to operate at Ronald Reagan Washington National Airport using slot 1497. This slot previously was used by American West Airlines under Exemption No. 5133.

[FR Doc. 00–24151 Filed 9–19–00; 8:45 am]

BILLING CODE 4910–13–M

DEPARTMENT OF TRANSPORTATION

Federal Aviation Administration

Air Traffic Procedures Advisory Committee

AGENCY: Federal Aviation Administration (FAA), DOT.

SUMMARY: The FAA is issuing this notice to advise the public that a meeting of the Federal Aviation Administration Air Traffic Procedures Advisory Committee (ATPAC) will be held to review present air traffic control procedures and practices for standardization, clarification, and upgrading of terminology and procedures.

DATES: The meeting will be held from October 3–5, 2000, from 9 a.m. to 5 p.m. each day.

ADDRESSES: The meeting will be held at the Federal Aviation Administration, Bessie Coleman Conference Center, 800 Independence Avenue, SW., Washington, DC.

FOR FURTHER INFORMATION CONTACT: Mr. Eric Harrell, Executive Director, ATPAC, Terminal and En Route Procedures Division, 800 Independence Avenue, SW., Washington, DC 20591, telephone (202) 267–3725.

SUPPLEMENTARY INFORMATION: Pursuant to Section 10(a)(2) of the Federal Advisory Committee Act (Pub. L. 92–463; 5 U.S.C. App. 2), notice is hereby given of a meeting of the ATPAC to be held October 3 through October 5, 2000, at the Federal Aviation Administration, Bessie Coleman Conference Center, 800 Independence Avenue, SW., Washington, DC.

The agenda for this meeting will cover: a continuation of the Committee's review of present air traffic control procedures and practices for standardization, clarification, and upgrading of terminology and procedures. It will also include:

1. Approval of Minutes.

2. Submission and Discussion of Areas of Concern.

3. Discussion of Potential Safety Items.

4. Report from Executive Director.

5. Items of Interest.

6. Discussion and agreement of location and dates for subsequent meetings.

Attendance is open to the interested public but limited to the space available. With the approval of the Chairperson, members of the public may present oral statements at the meeting. Persons desiring to attend and persons desiring to present oral statements should notify the persons listed above not later than September 29, 2000. The next quarterly meeting of the FAA ATPAC is planned to be held from January 22–25, 2001, in Dallas, TX.

Any member of the public may present a written statement to the Committee at any time at the address given above.

Issued in Washington, DC, on August 30, 2000.

Eric Harrell,

Executive Director, Air Traffic Procedures Advisory Committee.

[FR Doc. 00–24148 Filed 9–19–00; 8:45 am]

BILLING CODE 4910–13–M

DEPARTMENT OF TRANSPORTATION

Federal Aviation Administration

Notice of Intent To Rule on Application 00–02–C–00–FOD To Impose and Use the Revenue From a Passenger Facility Charge (PFC) at Fort Dodge Regional Airport, Fort Dodge, IA

AGENCY: Federal Aviation Administration, (FAA), DOT.

ACTION: Notice of Intent To Rule on Application.

SUMMARY: The FAA proposes to rule and invites public comment on the application to impose and use the revenue from a PFC at Fort Dodge Regional Airport under the provisions of the Aviation Safety and Capacity Expansion Act of 1990 (Title IX of the Omnibus Budget Reconciliation Act of 1990) (Public Law 101–508) and Part 158 of the Federal Aviation Regulations (14 CFR Part 158).

DATES: Comments must be received on or before October 20, 2000.

ADDRESSES: Comments on this application may be mailed or delivered in triplicate to the FAA at the following address: Federal Aviation Administration, Central Region, Airports Division, 901 Locust, Kansas City, MO 64106.

In addition, one copy of any comments submitted to the FAA must be mailed or delivered to Ms. Rhonda Chambers, Airport Manager, Fort Dodge Regional Airport, at the following address: R.R. 2, Fort Dodge, IA 50501.

Air carriers and foreign air carriers may submit copies of written comments previously provided to the Fort Dodge Regional Airport, under section 158.23 of Part 158.

FOR FURTHER INFORMATION CONTACT: Mark Schenkelberg, FAA, Central Region, 901 Locust, Kansas City, MO 64106, (816) 329–2645. The application may be reviewed in person at this same location.

SUPPLEMENTARY INFORMATION: The FAA proposes to rule and invites public comment on the application to impose and use the revenue from a PFC at Fort Dodge Regional Airport under the provisions of the Aviation Safety and Capacity Expansion Act of 1990 (Title IX of the Omnibus Budget Reconciliation Act of 1990) (Public Law 101–508) and Part 158 of the Federal Aviation Regulations (14 CFR Part 158).

On August 24, 2000, the FAA determined that the application to impose and use the revenue from a PFC submitted by the Fort Dodge Regional Airport, Fort Dodge, Iowa, was substantially complete within the requirements of section 158.25 of Part 158. The FAA will approve or disapprove the application, in whole or in part, no later than November 10, 2000.

The following is a brief overview of the application.

Level of the proposed PFC: $3.00.

Proposed charge effective date: February 1, 2001.

Proposed charge expiration date: December 1, 2001.

Total estimated use revenue: $19,896.

Total estimated impose revenue: $19,896.

Brief description of proposed project(s): Mark and Groove Runway 6/24, Update Airport Master Plan.

Any person may inspect the application in person at the FAA office listed above under **FOR FURTHER INFORMATION CONTACT**.

In addition, any person may, upon request, inspect the application, notice and other documents germane to the application in person at the Fort Dodge Regional Airport.

Issued in Kansas City, Missouri on August 28, 2000.

George A. Hendon,

Manager, Airports Division, Central Region.

[FR Doc. 00–24149 Filed 9–19–00; 8:45 am]

BILLING CODE 4910–13–M

DEPARTMENT OF TRANSPORTATION

Federal Aviation Administration

Notice of Passenger Facility Charge (PFC) Approvals and Disapprovals

AGENCY: Federal Aviation Administration (FAA), DOT.

ACTION: Monthly Notice of PFC Approvals and Disapprovals. In August 2000, there were three applications approved. This notice also includes information on one application, approved in July 2000, inadvertently left off the July 2000 notice. Additionally, eight approved amendments to previously approved applications are listed.

SUMMARY: The FAA publishes a monthly notice, as appropriate, of PFC approvals and disapprovals under the provisions of the Aviation Safety and Capacity Expansion Act of 1990 (Title IX of the Omnibus Budget Reconciliation Act of 1990) (Pub. L. 101–508) and Part 158 of the Federal Aviation Regulations (14 CFR Part 158). This notice is published pursuant to paragraph d of § 158.29.

PFC Applications Approved

Public Agency: Greater Baton Rouge Airport District, Baton Rouge, Louisiana.

Application Number: 00–05–C–00–BTR.

Application Type: Impose and Use a PFC.

PFC Level: $3.00.

Total PFC Revenue Approved in This Decision: $6,504,390.

Earliest Charge Effective Date: August 1, 2016.

Estimated Charge Expiration Date: January 1, 2022.

Class of Air Carriers Not Required to Collect PFC's: Part 135 on-demand air taxi/commercial operators filing FAA Form 1800–31.

Determination: Approved. Based on information contained in the public agency's application, the FAA has determined that the approved class accounts for less than 1 percent of the total annual enplanements at Greater Baton Rouge Metropolitan Airport.

Brief Description of Projects Approved for Collection and Use:

Construct and realign airport access road.

Acquire and install six passenger loading bridges.

Decision Date: July 25, 2000.

FOR FURTHER INFORMATION CONTACT: G. Thomas Wade, Southwest Region Airports Division, (817) 222–5613.

Public Agency: Palm Beach County, Department of Airports, West Palm Beach, Florida.

Application Number: 00–05–C–00–PBI.

Application Type: Impose and use a PFC.

PFC Level: $3.00.

Total PFC Revenue Approved in This Decision: $37,324,000.

Earliest Charge Effective Date: December 1, 2000.

Estimated Charge Expiration Date: November 1, 2005.

Class of Air Carriers Not Required to Collect PFC's: Air taxi/commercial operators filing FAA Form 1800–31.

Determination: Approved. Based on information contained in the public agency's application, the FAA has determined that the approved class accounts for less than 1 percent of the total annual enplanements at Palm Beach International Airport.

Brief Description of Projects Approved for Collection and Use:

Construct concourse B expansion.

Baggage improvements and rehabilitation.

Brief Description of Projects Approved for Collection:

Construct taxiway A extension and canal relocation.

Construct perimeter road.

Terminal signage.

Rehabilitate cabin air system.

Acquire noise land within 65 to 69 DNL.

Expand terminal concourse C.

Decision Date: August 22, 2000.

FOR FURTHER INFORMATION CONTACT: Vernon P. Rupita, Orlando Airports District Office, (407) 812–6331, ext. 24.

Public Agency: City of Fayetteville, North Carolina.

Application Number: 00–01–C–00–FAY.

Application Type: Impose and use a PFC.

PFC Level: $3.00.

Total PFC Revenue Approved in This Decision: $892,620.

Earliest Charge Effective Date: November 1, 2000.

Estimated Charge Expiration Date: October 1, 2002.

Class of Air Carriers Not Required to Collect PFC's: None.

Brief Description of Projects Approved for Collection and Use:

Airport entrance road.

Jetway system modifications.

Security system upgrade.

Preplanning associated with the runway safety areas.

Construction of a fire training facility and the rehabilitation of a 1,500 gallon aircraft rescue and firefighting (ARFF) vehicle.

Update airport master plan.

Installation of taxiway guidance signs and runway end identification lights.

Design of new general aviation area.

Acquire foreign object damage sweeper.

Installation of terminal loading bridges.

Construction of new general aviation area.

Acquire handicap lift device.

Acquire ARFF vehicle.

Design of non-licensed vehicle road.

Design of taxiway K (revised).

Installation of water main.

Design Highway 301 connector.

Land acquisition.

Improve terminal building.

Design of taxiway K extension.

Rehabilitate general aviation apron.

Acquire land for development.

Rehabilitate terminal building.

Install security access control system.

Brief Description of Projects Approved for Collection:

Construct north general aviation ramp.

Security system upgrade phase II.

Design and construct runway safety area, runway 4.

Acquire land.

Renovate terminal, phase II.

Construct runway safety area, runway 4 (phase 2).

Land acquisition.

Renovate terminal, phase III.

Construct runway safety area, runway 22.

Acquire land.

Acquire land in fee.

Construct non-license vehicle road.

Construct jet bridge modification.

Construct taxiway K.

Brief Description of Disapproved Project:

Rehabilitate runway 10/28.

Determination: Disapproved. The FAA has determined that the runway proposed for rehabilitation is an ineligible crosswind runway. Paragraph 521(c) of FAA Order 5100.38A, Airport Improvement Program (AIP) Handbook (October 24, 1989) states that, in order for a crosswind runway to be AIP eligible, the wind coverage on the primary runway must be less than 95 percent or the capacity of the primary runway is not sufficient to meet current and near term demand. The airport does not meet either criteria to make a crosswind runway AP eligible. Therefore, this project doesn't meet the requirements of § 158.15(b)(1).

Decision Date: August 28, 2000.

FOR FURTHER INFORMATION CONTACT: Lee Kyker, Atlanta Airports District Office, (404) 305–7161.

Public Agency: Central West Virginia Regional Airport Authority, Charleston, West Virginia.

Application Number: 00–06–C–00–CRW.

Application Type: Impose and use a PFC.

PFC Level: $3.00.

Total PFC Revenue Approved in This Decision: $992,810.

Earliest Charge Effective Date: February 1, 2001.

Estimated Charge Expiration Date: August 1, 2002.

Classes of Air Carriers Not Required to Collect PFC's:

(1) Part 135 charter operators for hire to the general public; (2) Part 121 charter operators for hire to the general public.

Determination: Approved. Based on information contained in the public agency's application, the FAA has determined that each approved class accounts for less than 1 percent of the total annual enplanements at Yeager Airport.

Brief Description of Projects Approved for Collection and Use:

Acquire two snow plows.

Main terminal apron extension.

Acquire snow broom.

Environmental assessment—safety area.

Emergency generator connection.

Terminal building expansion.

Two passenger loading bridges.

Passenger access walkway.

Brief Description of Withdrawn Project:

Benefit/cost analysis.

Determination: This project was withdrawn by the public agency in its letter dated August 30, 2000. Therefore, the FAA did not rule on this project in this decision.

Decision Date: August 30, 2000.

FOR FURTHER INFORMATION CONTACT: Kenneth Kroll, Eastern Region Airports Division, (718) 553–3357.

AMENDMENTS TO PFC APPROVALS

Amendment No. city, state	Amendment approved date	Original approved net PFC revenue	Amended approved net PFC revenue	Original estimated charge exp. date	Amended estimated charge exp. date
94–01–C–02–TUP Tupelo, MS	06/09/00	$490,400	$430,550	12/01/07	03/01/04
98–02–U–01–TUP Tupelo, MS	06/09/00	NA	NA	12/01/07	03/01/04
95–01–C–02–IMT Iron Mountain, MI	08/10/00	122,367	130,214	01/01/01	03/01/01
97–02–C–01–CHA Chattanooga, TN	08/10/00	2,803,262	150,000	07/01/10	08/01/05
96–03–C–01–LAX	08/25/00	59,902,000	52,027,000	02/01/04	01/01/04

AMENDMENTS TO PFC APPROVALS—Continued

Amendment No. city, state	Amendment approved date	Original approved net PFC revenue	Amended approved net PFC revenue	Original estimated charge exp. date	Amended estimated charge exp. date
Los Angeles, CA					
92–01–I–07–PHL	08/25/00	103,824,405	100,014,092	07/01/11	02/01/11
Philadelphia, PA					
95–03–C–03–PHL	08/25/00	14,000,000	9,994,274	07/01/11	02/01/11
Philadelphia, PA					
98–06–C–04–PHL	08/25/00	14,000,000	8,500,000	07/01/11	02/01/11
Philadelphia, PA					

Issued in Washington, DC on September 14, 2000.

Eric Gabler,

Manager, Passenger Facility Charge Branch.

[FR Doc. 00–24146 Filed 9–19–00; 8:45 am]

BILLING CODE 4910–13–M

DEPARTMENT OF TRANSPORTATION

Federal Aviation Administration

Notice of FAA Flight Standards Continuous Airworthiness Maintenance Division, Air Transportation Division and General Aviation and Commercial Division, Guidance Documents Internet Web Site Availability To Request Comments; Flight Standards Guidance Documents Internet Web Site

AGENCY: Federal Aviation Administration (FAA), DOT.

ACTION: Notice.

SUMMARY: This notice announces the availability of proposed Flight Standards policy documents. These documents provide information and guidance regarding prospective Airworthiness and Operations procedures to FAA Aviation Safety Inspectors. The public is invited to provide comments on these documents published on the FAA's interned web site.

FOR FURTHER INFORMATION CONTACT: Connie Streeter, Flight Standards; Air Transportation Division, at (202) 267–3232, Gwen Hargrove, Continuous Airworthiness Maintenance Division, at (202) 267–3440, and Susan Gardner, General Aviation and Commercial Division, at (202) 267–3437, Federal Aviation Administration, 800 Independence Avenue, SW., Washington, DC 20591.

SUPPLEMENTARY INFORMATION:

Discussion

Copies of draft guidance documents may be obtained by accessing the FAA Flight Standards Air Transportation Division, webpage at http://www.opspecs.com. Interested parties are invited to submit comments on proposed guidance documents. Comments must specifically identify the policy document, and comments can be submitted to the address specified above. The appropriate FAA Flight Standards Division before issuing the final document will consider all communications received on or before the closing date for comments. The guidance documents are bulletin amendments to FAA Flight Standards Orders 8300.10 and 8700.10 and 8700.10 Inspector's Handbook. These guidance bulletins serve as instructions to the FAA Aviation Safety Inspector's in the performance of their duties. Safety critical guidance bulletins may not be posted on the webpage due to urgent safety issues. Comments to these documents must be received no later than the 10th day from the posting of the document on the Internet Web Site.

Issued in Washington, D.C. on August 31, 2000.

L. Nicholas Lacey,

Director, Flight Standards Service.

[FR Doc. 00–24150 Filed 9–19–00; 8:45 am]

BILLING CODE 4910–13–M

DEPARTMENT OF TRANSPORTATION

Federal Aviation Administration

[Docket No. FAA–2000–7937]

Runway Safety Areas

AGENCY: Federal Aviation Administration (FAA), DOT.

ACTION: Request for comments.

SUMMARY: Section 514 of the FAA Reauthorization Act of 2000 requires the FAA to solicit comments on the need for improvement of runway safety areas through the use of engineered material arresting systems, longer runways, and such other alternatives as the Administrator considers appropriate. This notice is being issued in response to that legislative requirement.

DATES: Comments must be received on or before December 19, 2000.

ADDRESSES: Address your comments to the Docket Management System, U.S. Department of Transportation, Room Plaza 401, 400 Seventh Street, SW., Washington, DC 20590–0001. You must identify the docket number FAA–2000–7937 at the beginning of your comments. If you wish to receive confirmation that FAA received your comments, include a self-addressed stamped postcard.

You may also submit comments through the Internet to *http://dms.dot.gov/.* You may review the public docket containing comments to these proposed regulations in person in the Dockets Office between (9:00 a.m. and 5:00 p.m.), Monday through Friday, except Federal holidays. The Dockets Office is on the plaza level of the Nassif Building at the Department of Transportation at the above address. Also you may review the comments on the Internet at http://dms.dot.gov.

FOR FURTHER INFORMATION CONTACT: Robert E. David, AAS–300, Airport Safety and Operations Division, Office of Airport Safety and Standards, Federal Aviation Administration, 800 Independence Avenue, SW., Washington, DC 20591, telephone (202) 267–3085.

SUPPLEMENTARY INFORMATION:

Comments Invited

Interested parties are invited to comment on the need to improve runway safety areas and the alternatives outlined in this notice that the FAA considers in determining whether or not it is practicable to improve a particular runway safety area. The FAA is also interested in receiving comments that identify other alternatives that may be used to improve runway safety areas. Comments on the costs associated with implementing any of these measures are also invited.

Comments must identify the docket number and be submitted in duplicate to the DOT Rules Docket address

specified above. The docket is available for inspection before and after the comment closing date.

Background

In the early years of aviation, all airplanes operated from relatively unimproved airfields. As aviation developed, the alignment of takeoff and landing paths became centered on a well-defined area known as a landing strip. Thereafter, the requirements of more advanced airplanes necessitated improving or paving the center portion of the landing strip. The term ''landing strip'' was retained to describe the graded area surrounding and upon which the runway or improved surface was constructed. The primary role of a landing strip changed to that of a safety area surrounding a runway. Later, the designation of the area was changed to ''Runway Safety Area,'' and the distance it extended beyond the runway end was lengthened to reflect its functional role.

Prior to conducting an aircraft operation on a runway, a pilot is responsible for determining that the runway length and width is sufficient for the operation. The presence or absence of a runway safety area (RSA) is not part of this determination. The RSA is considered a safety enhancement that is beneficial if something abnormal occurs during the takeoff or landing.

The RSA enhances the safety of airplanes that undershoot, overrun, or veer off the runway. It provides greater flexibility and access for firefighting and rescue equipment during such incidents. RSAs extend along the sides and beyond the end of the runway and are capable, under normal (dry) conditions, of supporting airplanes without causing substantial damage to the airplanes or injury to their occupants. RSAs are cleared, graded, and have no potentially hazardous ruts, humps, depressions, or other surface variations. The only objects allowed in the RSA are those which are fixed by their function, such as an approach light system that provides pilots with visual navigation to the runway's end. These objects are as frangible as practical so that they will break away when hit by an aircraft, thereby minimizing the damage to the aircraft and reducing the risk of injuries to its occupants.

Standards for RSAs

The dimensional standards for RSAs vary according to the type of aircraft that the runway is intended to seve and visibility minimums associated with the runway. For example, the standard for the RSA for runways designed for visual approaches by small general aviation aircraft is an area 120 feet wide that extends 240 feet beyond each end of the runway. For larger aircraft the standard for an RSA is an area 500 feet wide that extends 1000 feet beyond each end of the runway. As a rule of thumb, the RSA length beyond the runway end is twice the RSA width.

The FAA's current design standards for RSAs are contained in Advisory Circular (AC) 150/5300–13, Airport Design (This advisory circular is available on the web: http://www.faa.gov/arp). The RSA dimensional standards have increased over the last thirty years as aircraft have become larger and faster. As with any change in standards, it is difficult for many existing airports to meet to the changed standards.

The FAA's policy is that these airports must improve the RSA for each runway, to the extent practicable, whenever the airport operator undertakes construction work on that runway.

Considerations in Determining Practicability

In determining the practicability of obtaining or improving RSAs, there are many factors that could affect the viability of the alternative. What may be viable at one airport may not be viable at another. Factors to be considered include:

a. Historical records of airport accidents/incidents.

b. The airport plans as reflected in current and forecast volume of passengers and operations, percent runway use, both of all weather and IFR operations; and the design aircraft, i.e., the aircraft category for which the runway length is based.

c. The extent to which the existing RSA complies with the standard. High performance aircraft, operating at higher loads and speeds have greater requirements than small, low performance aircraft.

d. Site constraints. These include, for example, precipitous terrain dropoff, the existence of bodies of water, wetlands, a major highway, a railroad at a runway end, etc.

e. Weather and climatic conditions. These include conditions such as low visibility, rain, snow, and ice and the frequency of these conditions. Overruns on contaminated runways constitute a significant percentage of runway excursions.

f. Availability of visual and electronic aids for landing.

Alternatives for Improving RSA's

The FAA believes that wherever it is practicable an airport operator should construct a safety area that complies with the standards contained in Advisory Circular 150/5300–13. Accomplishing this may involve land acquisition, grading, obstacle removal/relocation, and environmental mitigation. When it is not practicable to obtain the entire RSA in this manner, then the airport operator should obtain as much safety area as is possible.

When it is not possible to obtain the entire RSA as specified above, then the airport operator should consider the following alternatives. The applicability and practicability of these alternatives will vary depending upon the specific situation. In some instances it may be practicable to use these alternatives in combination with each other to obtain the RSA. A brief description of each alternative is provided.

a. Shifting, Realignment, or Relocation of the Runway

Shifting involves moving the runway along its extended runway centerline. This alternative may be applicable where land that could be used for RSA is available on one end of the runway but not on the other.

Realignment involves reorienting the runway heading at its present site. Generally, this alternative is only feasible if the entire runway is undergoing a major rehabilitation and the runway is not part of a parallel runway system.

Relocation involves moving the physical location of the runway. This alternative is practicable if sufficient land exists on the airport or adjacent to it for the construction of the relocated runway. The runway may have the same or a different orientation from the existing runway.

b. Reduction in Runway Length

This alternative is applicable where the existing runway length exceeds that which is required for the current or projected design aircraft operations. The alternative involves reducing the physical length of the pavement by removing pavement or marking it as unusable. This alternative may be applicable at a military base that has been transferred to civilian use or an air carrier airport that has been replaced with a new airport for the air carriers but remains open for use by general aviation aircraft.

c. Declared Distances

This alternative is applicable where the existing runway length exceeds that which is required for the current or projected design aircraft operations. This alternative involves the airport operator declaring that a length less than the actual pavement length is

available for landing or accelerate-stop distance calculations. For example, if a runway is 7000 feet in length, an airport operator may declare that only 6000 feet is available for landing or takeoff. The pilot then calculates his/her landing distance and accelerate-stop distance based upon 6000 feet, thereby providing an effective RSA of 1000 feet at the end of the runway. The 1000 feet of runway that is not available for use in the one direction may be available for operations in the other direction on the runway. (Note: this is how the declared distance alternative differs from the reduction in runway length alternative discussed in paragraph b.) Additional information on declared distances is contained in Appendix 14 of AC 150/5300–13.

d. Engineered Material Arresting Systems (EMAS)

This alternative provides a way to enhance safety when it is not practicable to obtain a full RSA through the preceding alternatives. It is only applicable to aircraft overruns. EMAS is a passive system consisting of material designed to decelerate an aircraft passing through it. Advisory Circular 150/5220–22, Engineered Materials Arresting Systems for Aircraft Overruns contains additional information on EMAS (This advisory circular is available on the web: htts://www.faa.gov/arp). EMAS is not a substitute for, nor equivalent to any length or width of runway safety area. It is placed off the end of the runway centered upon the extended runway centerline. The width of the EMAS installation is the same as the width of the runway while its length is dependent upon the design aircraft and amount of land area available beyond the end of the runway.

Issued in Washington, D.C. on September 13, 2000.

David L. Bennett,

Director, Office of Airport Safety and Standards.

[FR Doc. 00–24147 Filed 9–19–00; 8:45 am]

BILLING CODE 4910–13–M

DEPARTMENT OF TRANSPORTATION

Federal Railroad Administration

Agency Information Collection Activities

AGENCY: Federal Railroad Administration, DOT.

ACTION: Notice of OMB Approvals.

SUMMARY: In compliance with the Paperwork Reduction Act of 1995 (44 U.S.C. 3501 *et seq.*) and 5 CFR 1320.5(b), this notice announces that the information collection requirements (ICRs) listed below have been re-approved by the Office of Management and Budget (OMB) for an additional three years. These ICRs pertain to 49 CFR Parts 207, 209, 210, 212, 214, 215, 217, 218, 219, 220, 221, 223, 228, 229, 232, 233, 234, 235, and 236. The OMB approval numbers, titles, and expiration dates are included herein under the Supplementary Information title.

FOR FURTHER INFORMATION CONTACT: Mr. Robert Brogan, Office of Planning and Evaluation Division, RRS–21, Federal Railroad Administration, 1120 Vermont Ave., N.W., Mail Stop 17, Washington, D.C. 20590 (telephone: (202) 493-6292), or Dian Deal, Office of Information Technology and Productivity Improvement, RAD–20, Federal Railroad Administration, 1120 Vermont Ave., N.W., Mail Stop 35, Washington, D.C. 20590 (telephone: (202) 493–6133). (These telephone numbers are not toll-free.)

SUPPLEMENTARY INFORMATION:

The Paperwork Reduction Act of 1995 (PRA), Pub. L. No. 104–13, § 2, 109 Stat. 163 (1995) (codified as revised at 44 U.S.C. 3501–3520), and its implementing regulations, 5 CFR Part 1320, require Federal agencies to display OMB control numbers and inform respondents of their legal significance once OMB approval is obtained. The following FRA ICRs were recently re-approved: (1) OMB No. 2130–0004, Railroad Locomotive Safety Standards and Event Recorders (49 CFR Part 229). The new expiration date for this information collection is September 30, 2003. (2) OMB No. 2130–0005, Hours of Service Regulations (49 CFR Part 228). The new expiration date for this information collection is September 30, 2003. (3) OMB No. 2130–0006, Railroad Signal System Requirements (49 CFR Parts 233, 235, and 236). The new expiration date for this information collection is July 31, 2003. (4) OMB No. 2130–0017, DOT Crossing Inventory Form. The new expiration date for this information collection is March 31, 2003. (5) OMB No. 2130–0035, Railroad Operating Rules (49 CFR Parts 217 and 220). The new expiration date for this information collection is August 31, 2003. (6) OMB No. 2130–0500, Accident/Incident Reporting and Recordkeeping (49 CFR Part 225). The new expiration date for this information collection is July 31, 2003. (7) OMB No. 2130–0502, Filing of Dedicated Cars (49 CFR Part 215). The new expiration date for this information collection is July 31, 2003. (8) OMB No. 2130–0506, Identification of Cars Moved in Accordance with Order 13528. The new expiration date for this information collection is June 30, 20003. (9) OMB No. 2130–0509, State Safety Participation Regulations and Remedial Actions (49 CFR Parts 209 and 212). The new expiration date for this information collection is August 31, 2003. (10) OMB No. 2130–0516, Remotely Controlled Railroad Switch Operations (49 CFR Part 218). The new expiration date for this information collection is July 31, 2003.

Additionally, the following ICRs have been re-approved for another three years: (11) OMB No. 2130-0519, Bad Order and Home Shop Card (49 CFR Part 215). The new expiration date for this information collection is July 31, 2003. (12) OMB No. 2130–0520, Stenciling Reporting Mark on Freight Cars (49 CFR Part 215). The new expiration date for this information collection is July 31, 2003. (13) OMB No. 2130–0523, Rear-End Marking Devices (49 CFR Part 221). The new expiration date for this information collection is August 31, 2003. (14) OMB No. 2130–0525, Certification of Glazing Materials (49 CFR Part 223). The new expiration date for this information collection is August 31, 2003. (15) OMB No. 2130–0526, Control of Alcohol and Drug Use in Railroad Operations (49 CFR Part 219). The new expiration date for this information collection is June 30, 2003. (16) OMB No. 2130–0527, New Locomotive Certification, Noise Compliance Regulations (49 CFR Part 210). The new expiration date for this information collection is July 31, 2003. (17) OMB No. 2130–0529, Disqualification Proceedings (49 CFR 209, Subpart D). The new expiration date for this information collection is July 31, 2003. (18) OMB No. 2130–0534, Grade Crossing Signal System Safety (49 CFR Part 234). The new expiration date for this information collection is July 31, 2003. (19) OMB No. 2130–0535, Bridge Worker Safety Rules (49 CFR Part 214). The new expiration date for this information collection is August 31, 2003. (20) OMB No. 2130–0537, Railroad Police Officers (49 CFR Part 207). The new expiration date for this information collection is June 30, 2003. (21) OMB No. 2130–0540, Two-way End-of-Train Devices (49 CFR Part 232). The new expiration date for this information collection is August 31, 2003.

Persons subject to the above ICRs are not required to respond to any collections of information unless they display currently valid OMB control numbers. These approvals certify that FRA has complied with the PRA

provisions and with 5 CFR 1320.5(b) by informing the public about OMB's approval of the ICRs of the above cited regulations.

Authority: 44 U.S.C. 3501–3520.

Issued in Washington, D.C. on September 15, 2000.

Kathy A. Weiner,

Director, Office of Information Technology and Support Systems, Federal Railroad Administration

[FR Doc. 00–24152 Filed 9–19–00; 8:45 am]

BILLING CODE 4910–06–P

DEPARTMENT OF TRANSPORTATION

Research and Special Programs Administration

Office of Hazardous Materials Safety; Notice of Applications for Exemptions

AGENCY: Research and Special Programs Administration, DOT.

ACTION: List of Applicants for Exemptions.

SUMMARY: In accordance with the procedures governing the application for, and the processing of, exemptions from the Department of Transportation's Hazardous Materials Regulations (49 CFR Part 107, Subpart B), notice is hereby given that the Office of Hazardous Materials Safety has received the applications described herein. Each mode of transportation for which a particular exemption is requested is indicated by a number in the ''Nature of Application'' portion of the table below as follows: 1—Motor vehicle, 2—Rail freight, 3—Cargo vessel, 4—Cargo aircraft only, 5—Passenger-carrying aircraft.

DATES: Comments must be received on or before October 20, 2000.

ADDRESS COMMENTS TO: Records Center, Research and Special Programs Administration, U.S. Department of Transportation, Washington, DC 20590.

Comments should refer to the application number and be submitted in triplicate. If conformation of receipt of comments is desired, include a self-addressed stamped postcard showing the exemption application number.

FOR FURTHER INFORMATION CONTACT: Copies of the applications (See Docket Number) are available for inspection at the New Docket Management Facility, PL–401, at the U.S. Department of Transportation, Nassif Building, 400 7th Street, SW. Washington, DC 20590 or at http://dms.dot.gov.

This notice of receipt of applications for new exemptions is published in accordance with Part 107 of the Federal hazardous materials transportation law (49 U.S.C. 5117(b); 49 CFR 1.53(b)).

Issued in Washington, DC, on September 14, 2000.

J. Suzanne Hedgepeth,

Director, Office of Hazardous Materials Exemptions and Approvals.

NEW EXEMPTIONS

Application No.	Docket No.	Applicant	Regulation(s) affected	Nature of exemption thereof
12531–N	RSPA–00–7865	Worthington Cylinder Corporation, Columbus, OH.	49 CFR 173.302(a), 173.304(a), 173.304(d), 178.61(b), 178.61(f), 178.61(g), 178.61(i), 178.61(k).	To authorize the manufacture, marking, sale and use of non-DOT specification cylinders designed in accordance with DOT 4BW specification for use in transporting various hazarous materials. (Modes 1, 2, 3, 4.)
12532–N	RSPA–00–7864	Carleton Technologies Inc., Orchard Park, NY.	49 CFR 173.302(a) 175.3	To authorize the manufacture, marking, sale and use of non-DOT specification cylinders similar to DOT specification 39 cylinder for use in transporting helium, Division 2.2. (Modes 1, 2, 4.)
12533–N	RSPA–00–7862	Adams Healthcare Ltd., Garforth, Leeds, EN.	49 CFR 173.306(a)(3)(v)	To authorize alternative testing criteria for aerosol containers meeting DOT specification 2Q for use in transporting Divison 2.1 material. (Modes 1, 3.)
12534–N	RSPA–00–7863	MODcol Corp., Sunnyvale, CA.	49 CFR 173.302, 178.602–178.606.	To authorize the manufacture, marking, sale and use of a composite package containing limited quantities of Class 3 material with fiberboard or plywood overpack. (Modes 1, 2, 3, 4.)
12535–N	RSPA–00–7886	Untied States Department of Commerce, Gaithersburg, MD.	49 CFR 177.842(b)(1)	To authorize the transportation in commerce of unirradiated fuel in carbon steel structures with an alternative distance separation within the transport vehicle. (Mode 1.)
12536–N	RSPA–00–7887	Department of Energy, Albuquerque, NM.	49 CFR 173.211	To authorize the transportation in commerce of a specially designed device consisting of a sealed stainless steel containment vessel overpacked in a steel transport container for an oxidizing solid, Division 5.1. (Mode 1.)
12537–N	RSPA–00–7885	Noranda-Dupont LLC, Wilmington, DE.	49 CFR 172.203(a), 180.509((1) (2).	To authorize an alternative retest criteria for DOT specification 111A100W tank cars used in sulfuric acid service. (Mode 1.)
12538–N	RSPA–00–7884	Champagne Specialties, Inc., Fairport, NY.	49 CFR 180.519	To authorize the repair and alteration of multi-tank car tanks that conform to alternative requirements for qualification and maintenance. (Mode 1.)
12539–N	RSPA–00–7883	Edlow International Company, Washington, DC.	49 CFR 173.420(a)(2)(i)	To authorize the one-time transportation of 19 model 30B cylinders, which deviate from the ANSI 14.1 standards, containing uranium hexafluoride, Class 7. (Modes 1, 3.)

NEW EXEMPTIONS—Continued

Application No.	Docket No.	Applicant	Regulation(s) affected	Nature of exemption thereof
12541–N	RSPA–00–7888	Rotonics Manufacturing, Inc., Gardena, CA.	49 CFR 172.101 Col 8b and 8c, 173.197.	To authorize the manufacture, marking, sale and use of a 200 gallon, high density polyethylene, rotationally molded roll on/roll off container as an outer packaging for use in transporting regulated medical waste, Division 6.2. (Mode 1.)
12542–N	RSPA–00–7889	United States Enrichment Corporation (USEC), Bethesda, MD.	49 CFR 173.420(a)(2)(i)	To authorize the transportation in commerce of one model 48X cylinder, which deviated from the ANSI 14.1 standards, containing uranium hexafloride, Class 7. (Modes 1, 2.)

[FR Doc. 00–24183 Filed 9–19–00; 8:45 am]
BILLING CODE 4910–60–M

DEPARTMENT OF TRANSPORTATION

Federal Transit Administration

Joint Partnership Rail Grade Crossing Safety Project

AGENCY: Federal Transit Administration (FTA), DOT.

ACTION: Notice and solicitation of proposals.

SUMMARY: This Notice announces the solicitation of proposals for the deployment of innovative rail transit grade crossing and safety technology through the Federal Transit Administration's (FTA) Joint Partnership Program (JPP). As the interest in and demand for efficient rail transit operating in a shared corridor environment increases, the challenge to provide safe, and cost-effective service will continue to grow. FTA seeks to evaluate and deploy innovative technologies that will enhance the safe operation of rail transit in mixed traffic situations. This deployment will contribute towards the widespread introduction and adoption of innovation to solve grade crossing and other critical safety challenges affecting rail transit operations.

DATES: Proposals (6 copies) must be received by November 6, 2000.

ADDRESSES: Proposals shall be submitted to Elaine Dezenski, Office of Research, Demonstration and Innovation, Federal Transit Administration, 400 Seventh Street, SW, Room 9401, Washington, DC 20590 and shall reference Joint Partnership Rail Grade Crossing Safety Project.

FOR FURTHER INFORMATION CONTACT: Elaine Dezenski, Joint Partnership Program Manager at (202) 493–2633.

SUPPLEMENTARY INFORMATION: Section 5314(a) of Title 49, U.S.C., provides resources for research, development, or demonstration projects that will assist in the improvement of mass transportation service. FTA's National Planning and Research budget for fiscal year 2000 includes $400,000 for the deployment of rail grade crossing and safety technology. Note: FTA anticipates that additional funding will be made available in FY 2001 and 2002 to continue the support of projects in this area. Therefore, it is anticipated that this solicitation could support a multi-year project.

There are significant safety challenges facing a growing number of rail transit providers, in particular, rail transit providers that operate or anticipate operating services in shared rail corridors with railroads, or in mixed vehicular and pedestrian traffic. Advancements in grade crossing and safety technology are an important part of addressing safety concerns that arise when mixed modes of transportation are operating in the same environment.

There are over 190 projects authorized for Section 5309 New Starts funding in TEA–21 that are undertaking the FTA New Starts planning and project development process. Many of the project sponsors have identified safety concerns in locations where there is a proposed rail grade crossing, a shared corridor grade crossing, mixed traffic rail operations, and pedestrian crossings. Project sponsors, together with suppliers of technology, are encouraged to participate in this solicitation to assess potential technological solutions to safety concerns early in the project development process. Under the JPP, authorized pursuant to 49, U.S.C., 5312(d), the Secretary may enter into grants, contracts, cooperative agreements and ''other agreements'' with competitively selected consortia to promote early deployment of innovation in mass transportation services, management, operational practices, or technology. Accordingly, FTA's JPP is seeking innovative partnerships with eligible consortia to share in the costs, risks and rewards of deploying new rail grade crossing and safety technologies.

Table of Contents

I. Background
II. Program Vision, Goals and Objectives
III. Joint Partnership Guidelines
IV. Technology Considerations
V. Submission of Candidate Proposals
VI. Evaluations and Selection

I. Background

Since 1994, DOT has initiated a number of cross-modal efforts to improve grade crossing safety, including the development of ITS technologies at highway-rail intersections, and the demonstration of new signs, signals, and train control systems. In addition, FTA has also implemented grade crossing safety activities that support the goals and objectives identified in the FTA Research & Technology 5-Year Plan (October 1999). For further information on the Plan, see section II (b) below or www.fta.dot.gov/research. For additional information on FTA grade crossing projects, see Transit Cooperative Research Report no.17, Integration of Light Rail Transit into City Streets, 1996, and the National Cooperative Highway Research Programs Synthesis 271, Traffic Signal Operations Near Highway-Rail Grade Crossings, 1999 available from Transportation Research Board's web site *www.national-academies.org/trb/bookstore.*

Operating light rail and commuter rail transit presents unique safety challenges at highway and pedestrian intersections. One of the major challenges facing rail transit operators is to effectively address the problem of operating trains at grade, across intersections, where they may conflict with motor vehicles and pedestrians. Rail transit systems across the United States have experienced grade crossing accidents. While there is no universal solution to the problem, transit operators across the nation are either conducting or evaluating various means to effectively provide additional

warnings or ways to prevent/deter motorists and pedestrians from making illegal maneuvers at grade crossings. The problem of motorists and pedestrians disregarding the traditional warning devices at crossings is particularly pronounced. For example, safety concerns arise when rail transit operates in a shared corridor with freight, or commuter service, or if the alignment includes parallel streets along the right-of-way from which right and left turns can be made across the tracks. Limited information as well as lack of real-time information on the operational status of grade crossing equipment is also an area of concern. Dispatch centers often lack real-time information on whether grade crossing equipment is functioning properly. Improved control center diagnostics, Intelligent Transportation Systems (ITS) and other applications that contribute to more viable command and control operations may be considered. The demonstration of new and innovative technology to alleviate such safety hazards is critical to ensuring safe, reliable, shared corridor operations.

II. Program Vision, Goals and Objectives

The Joint Partnership Rail Grade Crossing Safety Project will support the goals and objectives of the One DOT Highway Rail Grade Crossing Team (Team). The Team promotes cross-modal strategies and research activities to improve grade crossing safety along the nation's surface transportation infrastructure. Further, the project will support the U.S. Department of Transportation's number one strategic goal—to promote the public health and safety by working toward the elimination of transportation related deaths, injuries, property damage, and the improvement of personal security and property protection. The project will also support FTA's Strategic Goals and the FTA Research & Technology 5-Year Plan Program areas, as described in paragraphs (a) and (b) below.

(a) Related FTA Strategic Goals:

(1) Safety and Security—Promote the public health and safety by working toward the elimination of transit-related deaths, injuries, property damage, and the improvement of personal security and property protection.

(2) Mobility and Accessibility—Shape America's future by ensuring a transportation system that is accessible, integrated, efficient, and offers a flexibility of choice.

(3) Economic Growth and Trade—Advance America's economic growth and competitiveness domestically and internationally through efficient and flexible transportation.

(4) Human and Natural Environment—Protect and enhance communities and the natural environment affected by transit.

(b) Related FTA Research & Technology 5-Year Plan Program Areas:

(1) Safety & Security

Railroad Grade Crossing Safety
Information Security

(2) Equipment & Infrastructure

Rail Equipment and Systems
Communication-Based Train Control Systems

(3) Fleet Operations

Transit Capacity and Quality of Service
Transit Intelligent Transportation Systems
Mixed Rail Corridor Operations

III. Joint Partnership Guidelines

1. General Authority

Section 5312(d) of Title 49, U.S.C., authorizes the Secretary, under terms and conditions he prescribes, to enter into grants, contracts, cooperative agreements, and other agreements with consortia, to promote the early deployment of innovation in mass transportation services, management, operational practices, or technology that has broad applicability. This program is intended to be carried out in consultation with the transit industry by merit-based, competitively selected consortia that will share in the costs, risks, and rewards of early deployment of innovation.

2. Joint Partnership Agreements

Historically, FTA has supported research, development, demonstration, and deployment of innovation through the use of grants and cooperative agreements. Since 1994, FTA has acted as agent for the Defense Advanced Research Projects Agency (DARPA), which pioneered use of ''other agreements'' as an alternative to grants and cooperative agreements. These ''other agreements'' have proven successful in situations where the other funding instruments did not provide sufficient flexibility to induce non-government, particularly commercial, entities to participate in partnership with the Government. FTA sought and received ''other agreement'' authority in TEA–21. In selecting from among grants, cooperative agreements and ''other agreements,'' FTA will select the instrument best suited to the goals and objectives of each Joint Partnership Project. Generally speaking, an ''other agreement'' will be used in those instances where one of the more traditional instruments is determined, in consultation with the potential partners, to be inappropriate for one or more reasons.

3. Definition of Consortium

An eligible consortium:

(a) Means 1 or more public or private organizations located in the United States that provide mass transportation service to the public, and 1 or more businesses, including small- and medium-sized businesses, incorporated in a State, offering goods or services, or willing to offer goods and services, to mass transportation operators; and

(b) May include, as additional members, public or private research organizations located in the United States or State or local governmental authorities.

4. Financing

(a) Cost Sharing. Section 5312(d)(3) provides that a consortium assisted under the JPP contribute not less than 50 percent of the costs of any joint partnership project. FTA participation is limited to $400,000 for this solicitation. However, as stated above, FTA anticipates receiving additional funding to support related programs in FY 2001 and 2002. Applicants may propose multi-year tasks, if applicable to their proposal. Any business, organization, person, or governmental body may contribute funds to a JPP. FTA will apply the same non-Federal share rules to the JPP applications as apply to other FTA assistance programs. Cash or in-kind contributions applicable to grants and cooperative agreements with state and local governments, non-profit organizations or educational institutions, are acceptable. See 49 CFR Parts 18 and 19.

IV. Technology Considerations

FTA has evaluated a number of grade crossing safety applications for light rail and commuter rail transit operations. The listing below gives a few examples of the types of projects that have been funded in the last five years. Applicants may expand on lessons learned from these efforts or evaluate and deploy new grade crossing safety innovations based on state-of-the-art technologies.

Project No./Title	Abstract	Cost	Grantee and/or Consultants
MA–26–7057, Advanced Signal & Gate Technologies for MBTA Grade Crossings.	Evaluate engineering improvements at commuter rail grade crossing with severe traffic problems and safety concerns.	$380,000	Massachusetts Bay Area Transportation Authority.
MA–03–7001, Four Quadrant Gated Grade Crossing.	Evaluate design and operational standards/safety enhancements for commuter rail grade crossings. Demonstrate use of four quadrant gates with vehicle detection system at commuter rail grade crossing.	300,000	Massachusetts Bay Area Transportation Authority.
MD–26–7024, Second Train Coming Warning Sign.	Develop & evaluate use of active 2nd train warning sign for motorists at light rail grade crossings. The warning sign will alert motorists who are stopped at the crossing that a second high-speed train is coming from the opposite direction.	200,000	Mass Transportation Administration Baltimore, MD.
CA–26–7017, Second Train Coming Warning Sign.	Develop & evaluate use of graphic 2nd train sign for pedestrians at rail grade crossings. This project is in conjunction with MD–26–7024, and will include field study of an active second train warning sign.	200,000	Los Angeles County Metropolitan Transportation Authority.
CA–26–7010, Assessment of Left Turn Crossing Gates for LRT.	Field test and technical studies to investigate left turn railroad crossing gated for light rail transit (LRT) grade crossings. Field test to include evaluation of track area vehicle detection systems.	200,000	Los Angeles County Metropolitan Transportation Authority.

V. Submission of Candidate Proposals

FTA is soliciting proposals for Joint Partnership Rail Grade Crossing Projects from eligible consortia. The proposal should outline the following in abbreviated form:

(1) Overview of the proposed effort, or proposed concept;

(2) List of partners, including one or more developers of technology and one or more transit operators;

(3) State of the technology;

(4) Work to be performed,

(5) Physical and/or operating characteristics of the innovation;

(6) Development of prototype equipment/process or pilot program;

(7) Schedule;

(8) Total project cost, including source of matching funds (private, non-profit, commercial, Title 49, U.S.C., discretionary or formula, Congestion Management Air Quality (CMAQ) Intelligent Transportation Systems (ITS), etc.);

(9) Assessment plan; and

(10) Relationship to FTA Research & Technology Five-Year Plan Program areas listed in paragraph II (b) of this Notice.

VI. Evaluation and Selection

In evaluating the proposals received, FTA will consider the following factors:

(1) State of technology and applicability to solving mixed-use operational challenges;

(2) Management capability and technical expertise of consortium;

(3) Proposed cost share;

(4) Cost and benefits (payback) of proposed work;

(5) Time to complete test and evaluation of the concept or technology;

(6) Realistic probability of wide spread application of technology; and

(7) Relative technical and financial risk.

As previously mentioned, proposals (6 copies) must be received by 45 days from the date of this notice. Proposals should be sent to the name and address in the ''Addresses'' section of this Notice.

Issued on: September 14, 2000.

Michael Winter,

Associate Administrator for Budget and Policy

[FR Doc. 00–24174 Filed 9–19–00; 8:45 am]

BILLING CODE 4910–57–P

DEPARTMENT OF TRANSPORTATION

Research and Special Programs Administration

Office of Hazardous Materials Safety; Notice of Applications for Modification of Exemption

AGENCY: Research and Special Programs Administration, DOT.

ACTION: List of applications for modification of exemptions.

SUMMARY: In accordance with the procedures governing the application for, and the processing of, exemptions from the Department of Transportation's Hazardous Materials Regulations (49 CFR Part 107, Subpart B), notice is hereby given that the Office of Hazardous Materials Safety has received the applications described herein. This notice is abbreviated to expedite docketing and public notice. Because the sections affected, modes of transportation, and the nature of application have been shown in earlier **Federal Register** publications, they are not repeated here. Requests for modifications of exemptions (*e.g.* to provide for additional hazardous materials, packaging design changes, additional mode of transportation, etc.) are described in footnotes to the application number. Application numbers with the suffix ''M'' denote a modification request. These applications have been separated from the new applications for exemptions to facilitate processing.

DATES: Comments must be received on or before October 5, 2000.

ADDRESS COMMENTS TO: Record Center, Research and Special Programs Administration, U.S. Department of Transportation, Washington, DC 20590.

Comments should refer to the application number and be submitted in triplicate. If confirmation of receipt of comments is desired, include a self-addressed stamped postcard showing the exemption number.

FOR FURTHER INFORMATION CONTACT: Copies of the applications are available for inspection in the Records Center, Nassif Building, 400 7th Street SW, Washington, DC or at http://dms.dot.gov.

This notice of receipt of applications for modification of exemptions is published in accordance with Part 107 of the Federal hazardous materials transportation law (49 U.S.C. 5117(b); 49 CFR 1.53(b)).

Issued in Washington, DC, on September 14, 2000.

J. Suzanne Hedgepeth,

Director, Office of Hazardous Materials Exemptions and Approvals.

Application No.	Docket No.	Applicant	Modification of exemption
8013–M		Praxair, Inc., Danbury, CT [1]	8013
10501–M		Semi-Bulk Systems, Inc., Fenton, MO [2]	10501
10985–M		Georgia-Pacific Corporation, Atlanta, GA [3]	10985
11749–M		Union Tank Car Company, E. Chicago, IN [4]	11749
12499–M	RSPA–2000–7650	M & M Service Company, Carlinville, IL [5]	12499
12504–M	RSPA–2000–7652	Radian International, Research Triangle Park, NC [6]	12504

[1] To modify the exemption to allow for the use of DOT 4E240 specification cylinders having a capacity up to 2,642 cubic inches to be used exclusively for sampling purposes.

[2] To modify the exemption to update reference language concerning Flexible Intermediate Bulk Container reuse provisions and repair procedures.

[3] To modify the exemption to authorize the transportation of Class 8 materials in tank cars which remain standing with unloading connections attached when no product is being transferred.

[4] To modify the exemption to change the availability/retention requirements of data documents used for alternative testing methods of DOT specification tank cars.

[5] To reissue the exemption originally issued on an emergency basis for the transportation of liquefied petroleum gas in a non-DOT specification cargo tank.

[6] To reissue the exemption originally issued on an emergency basis authorizing the use of temperature controlled equipment for the transportation of Class 3 and Division 2.1 materials.

[FR Doc. 00–24182 Filed 9–19–00; 8:45 am]

BILLING CODE 4910–60–M

DEPARTMENT OF TRANSPORTATION

Surface Transportation Board

[STB Finance Docket No. 33861]

Norfolk Southern Railway Company—Trackage Rights Exemption—Bessemer and Lake Erie Railroad Company

Bessemer and Lake Erie Railroad Company (B&LE), a Class II rail common carrier, has agreed to grant overhead trackage rights to Norfolk Southern Railway Company (NS) over approximately 50.38 miles of B&LE's mainline of railroad between NS' connection at Shenango, PA (at approximately milepost G4.27 in Mercer County), and NS' connection at Wallace Junction, PA (at approximately milepost E8.90 in Erie County).[1]

NS reported that it intends to consummate the transaction on September 20, 2000, or as soon thereafter as the parties may agree and/or the time required for any necessary labor notice is given.

The purpose of the trackage rights is to permit NS to move traffic more safely, efficiently and expeditiously in the western Pennsylvania region.

As a condition to this exemption, any employees affected by the trackage rights will be protected by the conditions imposed in *Norfolk and Western Ry. Co.—Trackage Rights—BN,* 354 I.C.C. 605 (1978), as modified in *Mendocino Coast Ry., Inc.—Lease and Operate,* 360 I.C.C. 653 (1980).

This notice is filed under 49 CFR 1180.2(d)(7). If it contains false or misleading information, the exemption is void *ab initio.* Petitions to revoke the exemption under 49 U.S.C. 10502(d) may be filed at any time. The filing of a petition to revoke will not automatically stay the transaction.

An original and 10 copies of all pleadings, referring to STB Finance Docket No. 33861, must be filed with the Surface Transportation Board, Office of the Secretary, Case Control Unit, 1925 K Street, N.W., Washington, DC 20423–0001. In addition, one copy of each pleading must be served on John V. Edwards, Norfolk Southern Railway Company, Three Commercial Place, Norfolk, VA 23510–2191.

Board decisions and notices are available on our website at ''WWW.STB.DOT.GOV.''

Decided: September 13, 2000.

By the Board, David M. Konschnik, Director, Office of Proceedings.

Vernon A. Williams,

Secretary.

[FR Doc. 00–24026 Filed 9–19–00; 8:45 am]

BILLING CODE 4915–00–P

[1] A redacted version of the trackage rights agreement between B&LE and NS was filed with the notice of exemption. The full version of the agreement, as required by 49 CFR 1180.6(a)(7)(ii), was concurrently filed under seal along with a motion for a protective order. A protective order was served on September 12, 2000.

DEPARTMENT OF TRANSPORTATION

Surface Transportation Board

[STB Finance Docket No. 33921]

Norfolk Southern Railway Company—Trackage Rights Exemption—Wisconsin Chicago Link, Ltd.

Wisconsin Chicago Link, Ltd. (WCLL), a Class III rail carrier and a subsidiary of Wisconsin Central Transportation Company, a noncarrier holding company,[1] has agreed to grant non-exclusive overhead trackage rights to Norfolk Southern Railway Company (NS) over approximately 1.9 miles of rail line known as the Panhandle Line,[2] which WCLL currently leases from Pennsylvania Lines LLC (PRR), between approximately PCC&StL milepost 309.8 at Odgen Junction near Rockwell Street and approximately PCC&StL milepost 307.9 near the Ash Street Interlocking in Chicago, Cook County, IL.[3]

NS reported that it intends to consummate the transaction on September 15, 2000, or as soon thereafter as the parties may agree and/or the time required for any necessary labor notice is given.

The purpose of this trackage rights is to permit NS to move overhead traffic more safely, efficiently, and quickly, as well as reduce congestion and help avoid delays of NS's traffic in the Chicago area.

As a condition to this exemption, any employees affected by the trackage rights will be protected by the

[1] *See Wisconsin Central Transportation Corporation—Continuance in Control Exemption—Wisconsin Chicago Link Ltd.,* STB Finance Docket No. 33811 (STB served Mar. 8, 2000).

[2] The Panhandle Line was formerly owned by Consolidated Rail Corporation. Pursuant to a transaction approved by the Board, and consummated by the parties on June 1, 1999, PRR was assigned assets designated to be operated as part of the NS rail system (the PRR-Allocated Assets). *See CSX Corporation and CSX Transportation, Inc., Norfolk Southern Corporation and Norfolk Southern Railway Company—Control and Operating Leases/Agreements—Conrail Inc. and Consolidated Rail Corporation,* STB Finance Docket No. 33388, Decision No. 89 (STB served July 23, 1998).

[3] *See Wisconsin Chicago Link Ltd.—Lease Exemption—Pennsylvania Lines LLC,* STB Finance Docket No. 33831 (STB served Feb. 10, 2000).

NS states that although the lease is yet to be executed and put into effect, the parties expect it to become effective in the near future and wish to be able to put the grant of trackage rights back to NS into effect on or near the same date.

conditions imposed in *Norfolk and Western Ry. Co.—Trackage Rights—BN,* 354 I.C.C. 605 (1978), as modified in *Mendocino Coast Ry., Inc.—Lease and Operate,* 360 I.C.C. 653 (1980).

This notice is filed under 49 CFR 1180.2(d)(7). If it contains false or misleading information, the exemption is void *ab initio.* Petitions to revoke the exemption under 49 U.S.C. 10502(d) may be filed at any time. The filing of a petition to revoke will not automatically stay the transaction.

An original and 10 copies of all pleadings, referring to STB Finance Docket No. 33921, must be filed with the Surface Transportation Board, Office of the Secretary, Case Control Unit, 1925 K Street, N.W., Washington, DC 20423–0001. In addition, one copy of each pleading must be served on James R. Paschall, Norfolk Southern Railway Company, Three Commercial Place, Norfolk, VA 23510–2191.

Board decisions and notices are available on our website at ''WWW.STB.DOT.GOV.''

Decided: September 12, 2000.

By the Board, David M. Konschnik, Director, Office of Proceedings.

Vernon A. Williams,

Secretary.

[FR Doc. 00–24025 Filed 9–19–00; 8:45 am]

BILLING CODE 4915–00–P

Federal Register

Wednesday,
September 20, 2000

Part II

Department of Transportation

Federal Aviation Administration

14 CFR Part 25, et al.

Improved Flammability Standards for Thermal/Acoustic Insulation Materials Used in Transport Category Airplanes; Proposed Rule

DEPARTMENT OF TRANSPORTATION

Federal Aviation Administration

14 CFR Parts 25, 91, 121, 125, and 135

[Docket No. FAA–2000–7909; Notice No. 00–09]

RIN 2120–AG91

Improved Flammability Standards for Thermal/Acoustic Insulation Materials Used in Transport Category Airplanes

AGENCY: Federal Aviation Administration (FAA), DOT.

ACTION: Notice of proposed rulemaking (NPRM).

SUMMARY: This document proposes upgraded flammability standards for thermal/acoustic insulation materials typically installed behind interior panels in transport category airplanes, by adopting new flammability test methods and criteria that specifically address flame propagation and entry of an external fire into the airplane (burnthrough) under realistic fire scenarios. This proposed rule change is considered necessary because the current standards do not realistically address situations in which thermal/acoustic insulation materials may contribute to the propagation of a fire. The proposed standards are intended to reduce the incidence and severity of cabin fires, particularly those ignited in inaccessible areas where thermal/acoustic insulation materials are typically installed. In addition, these proposed standards are also intended to provide an increased level of safety with respect to post-crash fires by delaying the entry of such a fire into the cabin, thereby providing additional time for evacuation and enhancing survivability. These new standards, in addition to being proposed for new type designs, are also proposed for newly manufactured airplanes entering part 121 service. Additionally, the proposed flame propagation standards are also proposed for newly manufactured airplanes entering parts 91, 125, and 135 service.

DATES: Comments must be received on or before January 18, 2001.

ADDRESSES: Comments on this document should be mailed or delivered, in duplicate, to: U.S. Department of Transportation Dockets, Docket No. FAA–2000–7909, 400 Seventh Street SW., Room Plaza 401, Washington, DC 20590. Comments also may be sent electronically to the following Internet address: 9-NPRM-CMTS@faa.gov. Comments may be filed and examined in Room Plaza 401 between 10 a.m. and 5 p.m. weekdays, except Federal holidays, In addition, the FAA is maintaining an information docket of comments in the Transport Airplane Directorate (ANM–100), Federal Aviation Administration, Northwest Mountain Region, 1601 Lind Avenue SW., Renton, WA 98055–4056. Comments in the information docket may be examined between 7:30 a.m. and 4 p.m. weekdays, except Federal holidays.

FOR FURTHER INFORMATION CONTACT: Jeff Gardlin, FAA Airframe and Cabin Safety Branch, ANM–115, Transport Airplane Directorate, Aircraft Certification Service, 1601 Lind Avenue SW., Renton, Washington 98055–4056; telephone (425) 227–2136, facsimile (425) 227–1149, e-mail: jeff.gardlin@faa.gov.

SUPPLEMENTARY INFORMATION:

Comments Invited

Interested persons are invited to participate in the making of the proposed action by submitting such written data, views, or arguments as they may desire. Comments relating to the environmental, energy, federalism, or economic impact that might result from adopting the proposals in this document are also invited. Substantive comments should be accompanied by cost estimates. Comments must identify the regulatory docket or notice number and be submitted in duplicate to the DOT Rules Docket address specified above.

All comments received, as well as a report summarizing each substantive public contact with FAA personnel concerning this proposed rulemaking, will be filed in the docket. The docket is available for public inspection before and after the comment closing date.

All comments received on or before the closing date will be considered by the Administrator before taking action on this proposed rulemaking. Comments filed late will be considered as far as possible without incurring expense or delay. The proposals in this document may be changed in light of the comments received.

Commenters wishing the FAA to acknowledge receipt of their comments submitted in response to this document must include a pre-addressed, stamped postcard with those comments on which the following statement is made: ''Comments to Docket No. FAA–2000–7909.'' The postcard will be date stamped and mailed to the commenter.

Availability of NPRMs

An electronic copy of this document may be downloaded using a modem and suitable communications software from the FAA regulations section of the Fedworld electronic bulletin board service (telephone: 703–321–3339), or the Government Printing Office's (GPO) electronic bulletin board service (telephone: 202–512–1661).

Internet users may reach the FAA's web page at http://www.faa.gov/avr/arm/nprm/nprm.htm or the GPO's web page at http://www.access.gpo.gov/nara for access to recently published rulemaking documents.

Any person may obtain a copy of this document by submitting a request to the Federal Aviation Administration, Office of Rulemaking, ARM–1, 800 Independence Avenue, SW., Washington, DC 20591, or by calling (202) 267–9680. Communications must identify the notice number or docket number of this NPRM.

Persons interested in being placed on the mailing list for future rulemaking documents should request from the above office a copy of Advisory Circular No. 11–2A, Notice of Proposed Rulemaking Distribution System, which describes the application procedure.

Background

Insulation is installed, typically behind airplane interior panels, in order to protect the occupants, cargo, and equipment of an airplane from thermal and acoustic extremes associated with environmental conditions and engine noise sources. This insulation is typically located in the passenger or cargo compartments of an airplane, although it may be located in any other compartment where insulation may be desired.

Insulation is usually constructed in the form of what is commonly referred to as a ''blanket.'' These insulation blankets are typically composed of: (1) A batting, of a material generically referred to as fiberglass (or glass fiber, or glass wool, with Owens Corning's Fiberglas® being one example); and (2) a film covering to contain the batting and to resist moisture penetration, usually metalized or non-metalized polyethylene terephthalate (PET), with DuPont's Mylar® being one example, or metalized polyvinyl fluoride (PVF), with DuPont's Tedlar® being one example. Another type of film, used on certain specific airplanes, is polyimide. It should be noted that, irrespective of the type of film, there are variations associated with its assembly for manufacture that result in differences in performance from a fire safety standpoint. These variations include the density of the film, the type and fineness of the scrim bonded to the film, and the adhesive used to bond the scrim

to the film. The scrim is usually constructed of either nylon or polyester and is bonded to the backside of the film to add shape and strength to the surface area. The scrim resembles a screen, and the mesh can vary in fineness. The type of adhesive used to bond the scrim to the film also varies. Adhesive is frequently the repository of any fire retardant in the assembled sheet.

Current Regulations Pertinent to Thermal/Acoustic Insulation Materials

The current regulations pertaining to thermal/acoustic insulation address neither the thermal nor acoustic performance aspects, but rather the materials' tendency to propagate flame. The intent of the requirement is to ensure that insulation materials do not represent a significant fuel source in the event of a fire, or provide a medium for a fire to spread inside the airplane. The existing FAA regulations have focused on ensuring that insulation blankets comply with the basic ''Bunsen burner'' flammability requirements described below.

In addition to performing their originally intended functions, thermal/acoustic blankets have also been shown to delay what is termed fuselage burnthrough. (Fuselage burnthrough refers to the penetration of a post-crash external fire through the fuselage skin and insulation into an interior compartment.) This delay of burnthrough serves to increase the time available for occupants to evacuate an airplane. However, this valuable attribute, which is believed to be a characteristic inherent to some degree in all existing insulation blankets, has not been addressed or required in the regulations.

The FAA has adopted a number of regulations that address flammability concerns on airplanes. The current flammability requirements pertinent to discussions in this notice are as follows:

Section 25.853(a), ''Compartment interiors,'' requires that materials in compartments occupied by crew or passengers must meet the applicable test criteria of part I of appendix F to 14 CFR part 25.

Section 25.855(d), ''Cargo or baggage compartments,'' requires that for cargo and baggage compartments not occupied by crew or passengers, materials used in the construction of said compartments must meet the applicable test criteria of part I of appendix F to part 25.

The applicable test criteria referenced in the requirements listed above are defined in paragraph (a)(1)(ii) of part I of appendix F to part 25, and prescribe that insulation materials must be self-extinguishing after having been subjected to the flame of a Bunsen burner for 12 seconds, in accordance with the procedures defined in paragraph (b)(4) of part I of appendix F. The average burn length may not exceed 8 inches, and the average flame time after removal of the flame source may not exceed 15 seconds. Drippings from the test specimen may not continue to flame for more than an average of 5 seconds after falling. These criteria were adopted in 1972 and are those in use today. The purpose of these test criteria is to ensure that materials be self-extinguishing when exposed to likely ignition sources under actual conditions. Based on the service record at the time these criteria were adopted, these criteria appeared to provide the level of protection intended.

Section 91.613, ''Materials for compartment interiors,'' requires that airplanes certificated in accordance with SFAR No. 41, with a maximum certificated takeoff weight in excess of 12,500 pounds, comply within 1 year of issuance of the airworthiness certificate with the requirements of §§ 25.853(a), (b), (b–1), (b–2), and (b–3), in effect on September 26, 1978.

Section 121.312(c), ''All interior materials, airplanes type certificated in accordance with SFAR No. 41 of 14 CFR part 21,'' requires that affected airplanes with a maximum certificated takeoff weight in excess of 12,500 pounds must have interior materials that comply with § 25.853(a), in effect on March 6, 1995 (formerly § 25.853(a), (b), (b–1), (b–2), and (b–3) in effect on September 26, 1978). Section 121.312(d), ''All interior materials; other airplanes,'' requires that materials must comply with the applicable requirements under which the airplane was type certificated.

Section 125.113(a)(1) & (2), ''Cabin interiors,'' requires that upon the first major overhaul of an airplane cabin or refurbishing of the cabin interior, all materials in each compartment used by the crew or passengers that do not meet the following requirements must be replaced with materials that meet these requirements: § 25.853 in effect on April 30, 1972, for airplanes for which the type certificate application was filed prior to May 1, 1972; and the materials requirement under which the airplane was type certificated for airplanes for which the type certificate application was filed on or after May 1, 1972.

Section 135.170, ''Materials for compartment interiors,'' specifically applies to airplanes that conform to an amended or supplemental type certificate issued in accordance with SFAR No. 41 for a maximum certificated takeoff weight in excess of 12,500 pounds. Paragraph (a) of this section requires that, one year after issuance of the initial airworthiness certificate issued in accordance with SFAR No. 41, the airplane must meet the compartment interior requirements set forth in § 25.853(a) in effect on March 6, 1995 [formerly § 25.853(a), (b), (b–1), (b–2), and (b–3) in effect on September 26, 1978]. This section also requires certain additional airworthiness requirements concerning the use of particular materials for various cabin interior components on airplanes other than commuter category airplanes and airplanes certificated under SFAR No. 41.

Incidents Involving Insulation Materials

The FAA is aware of at least six events in which the flammability characteristics of thermal/acoustic insulation material may have been a contributing factor. In November of 1993, a fire occurred in a McDonnell Douglas MD–87 airplane while it was taxiing in from a landing at Copenhagen, Denmark. The fire was found to have been initiated by an electrical fault behind a sidewall, but investigators later determined that the insulation materials contributed to the propagation of the fire. In November of 1995, a cabin fire occurred in a McDonnell Douglas MD–82 airplane prior to takeoff at Turin, Italy. The cause of the fire was attributed to a ruptured lighting ballast. In that case, other interior materials played a more significant role in propagating the fire, but there was evidence that the fire also propagated on the film of the insulation.

In June of 1996, the FAA received a letter from the Civil Aviation Authority of China (CAAC), which described three incidents of interior fires that occurred in China in 1994 and 1995. Those incidents involved McDonnell Douglas and Boeing airplanes and were caused by electrical problems or inappropriate maintenance actions. In each of those cases, physical damage to the airplane was minimal, but there was clear evidence that the fires had propagated on the insulation.

The FAA had been doing research to develop a new standard and had issued several reports on evaluations of test methods. The FAA initiated investigations and research, described later in this notice, to determine the appropriateness of applying existing Bunsen burner flammability criteria to thermal/acoustic insulation, as typically installed in concealed and inaccessible areas, and to develop more suitable criteria if considered necessary.

On September 2, 1998, an MD–11 airplane experienced a catastrophic accident as the result of an inflight fire. Although the cause of the accident has not been determined, the FAA considers that it is likely that the fire spread on the thermal/acoustic insulation, and has published proposed airworthiness directives to address the affected material (64 FR 43966, August 12, 1999). Those airworthiness directives are applicable to certain model DC–9–80 (MD–80), MD–90, DC–10–30/30F, and MD–11/11F airplanes and require removal of the worst performing material (metalized Mylar).

Fire Safety Research—General

The FAA has adopted an aggressive program to improve airplane fire safety. As a result, stringent new test methods were adopted that significantly upgraded the flammability standards for airplane materials associated with seat cushions, large interior panels, cargo compartment liners, and fire detection and suppression equipment for the majority of cargo compartments in the fleet. In order to maximize the safety benefit, the most significant areas were addressed first, with subsequent rulemaking addressing additional areas according to their relative priority in fire safety.

Those improvements addressed what the FAA considered to be the most significant areas of airplane interiors, from a flammability standpoint, and provided improved design requirements for new airplanes, as well as upgraded requirements for the existing fleet. All of these improvements were supported by research conducted, for the most part, at the FAA William J. Hughes Technical Center.

Fire Safety Research—Thermal/Acoustic Insulation Materials

As an initial response to the incidents described above, the FAA conducted a review of both the part 25, appendix F, required test method, and a test method used by certain segments of the industry to assess the flammability of thermal/acoustic insulation. That test method involves the use of alcohol-soaked cotton swabs that are ignited and then placed on a 16- × 24-inch sample of insulation material. Tests utilizing this method were conducted at the FAA Technical Center in 1997, and at other test facilities around the world. (Ref. FAA Report DOT/FAA/AR–97/58, ''Evaluation of Fire Test Methods for Aircraft Thermal Acoustical Insulation,'' dated September 1997, a copy of which is available in the docket for this rulemaking.) This multi-facility test program showed that the ''cotton-swab'' test did provide better discrimination among materials than did the existing Bunsen burner certification test method.

During 1997 and 1998, the Aerospace Industries Association (AIA) conducted additional testing at the FAA Technical Center, using a full-scale fuselage frame section. The purpose of these tests was to determine whether the cotton-swab test method was an adequate certification test method. The results of these tests showed that there were materials that could pass the cotton-swab test but would still propagate a flame in a large-scale environment. In addition, because the ignition source used was limited to a large cotton swab, the test did not simulate other sources of ignition, specifically any other burning material or electrical arcing. Based on these results, the FAA concluded that there was no effective test method that represented material behavior under full-scale test conditions. It was determined that a new test method was required.

Thermal/acoustic insulation impacts fire safety in two ways. First, due to its concealed location behind interior panels, if not sufficiently fire resistant it can provide a path for undetected fire propagation. As noted earlier, the current certification test requires that these materials be self-extinguishing after exposure to a Bunsen burner flame. Second, the insulation blankets can provide protection against fuselage burnthrough.

The FAA has been studying fuselage burnthrough since the late 1980's and has determined that by improving thermal/acoustic insulation, the time before an external fire penetrates the fuselage can be extended. In conjunction with the Civil Aviation Authority (CAA) of the United Kingdom (UK), and the Direction Generale de l'Aviation Civile (DGAC) of France, research was undertaken to assess the current capability of airplane fuselages to resist burnthrough from an external fuel fire. That research demonstrated the importance of thermal/acoustic insulation in the burnthrough process and is documented in the following reports: ''Fuselage Burnthrough from Large Exterior Fuel Fires,'' Federal Aviation Administration final report DOT/FAA/CT–90/10, July 1994; ''Full-Scale Test Evaluation of Aircraft Fuel Fire Burnthrough Resistance Improvements,'' Federal Aviation Administration report DOT/FAA/AR–98/52, January 1999; and ''Burnthrough Resistance of Fuselages: Further Investigation,'' CAA Paper 95003, Civil Aviation Authority, London 1995. (A copy of each report is in the docket for this rulemaking.) Findings as a result of that research indicate that without making any other change to the airplane, improved thermal/acoustic insulation can delay the entry of a post-crash fuel fire by several minutes, thus prolonging the time available for escape. Conversely, the absence of thermal/acoustic insulation can allow earlier entry of a fire into the airplane. Although there are other factors that affect fuselage burnthrough (*e.g.,* fuselage skin and floor panel characteristics, ventilation systems, etc.), research demonstrated that the simplest and most effective approach to improving burnthrough resistance was to improve the fire resistance of the insulation.

In the course of carrying out this research, a medium-scale test method that could be correlated with full-scale testing was developed in the UK. This test method was valuable in reducing the number of full-scale tests required to establish baseline data, but the size and complexity of the apparatus made it impractical for regulatory purposes. Consequently, smaller-scale testing, using a modified apparatus of the type currently used for certification testing of seat cushions and cargo compartment liners, was developed in France. This work was coordinated with the International Aircraft Materials Fire Test Working Group (IAMFTWG). The IAMFTWG consists of experts in the materials and fire testing specialties who help refine and support the development of test methods used in aviation, and includes representatives from the airlines, airframe manufacturers, material suppliers, and regulatory authorities, among others. A representative from the FAA Technical Center chairs this group. The IAMFTWG is a participative technical peer group that contributes to FAA research, but its activities are not regulatory in nature.

In July of 1997, the FAA determined that the separate investigative work on burnthrough and on flame propagation should be combined, with the aim of producing a single test method. The reason for this decision was to maximize the benefit from any requirements that resulted from the test method. However, during the test development period, it became clear that a single test was not practical. This is because the two phenomena are distinctly different, and performance in one area does not predict performance in the other. Therefore, the FAA has developed two tests, which are discussed below. (These tests are documented in draft FAA Report DOT/FAA/AR–99/44, ''Development of Improved Flammability Criteria for Aircraft Thermal/Acoustic Insulation,''

a copy of which will be placed in the docket when finalized. Additionally, Internet users may access the FAA Technical Center's web page at http://www.fire.tc.faa.gov for additional research relating to the test methods.)

Flame Propagation

In order to address the issue of fire propagation, the FAA conducted a series of small, medium, and full-scale tests with various insulation materials. These tests identified various characteristics of these materials that were significant as to whether or not the materials would spread a fire from an otherwise small ignition source. In particular, the FAA found that a piloted controlled ignition under conditions of radiant heat tends to predict the materials' performance in a full-scale fire. The influence of these characteristics is further dependent on the fire threat, and much of the FAA's work was aimed at identifying a realistic threat.

In conducting small-scale tests, the FAA found that many of the materials currently used tend to shrink or, in some cases, melt away from a flame faster than the flame can propagate on the material. That is, the mechanical properties of the material tend to dominate its combustion properties. However, the FAA also found that the same materials could behave differently if they were pre-heated, such as might occur in a confined space. In that case, some materials that self-extinguish when tested as a small test specimen at room temperature exhibit flame propagation tendencies that suggest the potential to grow into a large fire. The size of the ignition source and degree to which heat can be trapped determine whether the material will exhibit this behavior. If the ignition source is large enough, and the space confined, even highly fire-resistant materials will propagate a fire. However, confined spaces and potential ignition sources of varying sizes exist throughout the airplane.

The FAA has adapted American Society of Testing and Materials (ASTM) test method E 648, which uses a modest ignition source combined with exposure to radiant heat, to determine fire propagation performance. This test was developed to qualify flooring, but lends itself very effectively to insulation materials. (A copy of the ASTM test method is in the public docket for this rulemaking.) The FAA has developed a calibration method that will impose representative heat flux, as derived from full-scale tests, on the insulation materials. This test is considered to represent a realistic fire threat, and at the same time imposes reasonable success criteria, considering the state-of-the-art of insulation materials. The tests conducted by the FAA to qualify this standard indicate that some of the materials currently used will pass the new standard. This method is described in detail in proposed part VI to appendix F of part 25.

Burnthrough

This test method involves use of a kerosene burner apparatus, modified slightly from its configuration as used in other certification testing, that realistically simulates the thermal characteristics of a post-crash fire. The test stand and specimen are configured to simulate a small section of fuselage frames and stringers, with insulation material mounted over them. Fuselage skin is not represented in this test, since the delay in burnthrough afforded by the skin is not directly related to the performance of the insulation. The test is intended to measure the performance of the insulation itself. This test method is described in detail in proposed part VII to appendix F of part 25.

Discussion of the Proposal

Both service history and laboratory testing demonstrate that the current flammability requirements applicable to thermal/acoustic insulation materials may not be providing the intended protection against the spread of fires. Additionally, the FAA considers that increased protection against external fire penetrating the fuselage can be provided by proper selection of the same material. The FAA considers that the new test methods described earlier would not only provide for increased in-flight fire safety, by reducing the flammability of thermal/acoustic insulation blankets, but would also provide increased time for evacuation during externally fed, post-crash fires by increasing fuselage burnthrough resistance. The FAA therefore proposes to amend the current regulations as follows:

Proposed Part 25 Requirements

The FAA proposes to adopt the new test methods described earlier as new part VI and part VII requirements to appendix F. One aspect of the proposed requirements is a test to measure the propensity of the insulation to spread a fire. This test method is specified in proposed part VI to appendix F. The second aspect of the proposal is a test to measure the fire penetration resistance of the insulation, and is specified in proposed part VII to appendix F. The proposed requirements are new flammability test standards that would be applied to thermal/acoustic insulation in lieu of the current standard.

In addition, in view of the fact that current flammability requirements focus almost exclusively on materials located in occupied compartments (§ 25.853) and cargo compartments (§ 25.855), this proposal includes the adoption of a new § 25.856, which would address thermal/acoustic insulation materials wherever installed. This aspect of the proposal recognizes the role that thermal/acoustic insulation in other areas may have in either flame propagation and/or fuselage burnthrough protection, and would subject the thermal/acoustic materials in those compartments to the proposed flammability standards.

In accordance with § 21.17, these new standards would apply to new type certificates for which application is made after the effective date of the final rule.

Flame Propagation

The FAA proposes a new standard to address flame propagation of thermal/acoustic insulation, regardless of where it is installed in the airplane. The current flammability requirements focus almost exclusively on materials located in occupied compartments (§ 25.853) and cargo compartments (§ 25.855). However, the FAA considers that the potential for an inflight fire is not limited to those specific compartments. Thermal/acoustic insulation is installed throughout the airplane in other areas, such as electrical/electronic (E/E) compartments or surrounding air ducts, where there is the potential for materials to spread a fire as well. By applying the standards only to certain compartments, the intended safety benefit would not be realized for materials installed in other areas of the airplane. The proposal would therefore account for insulation installed in areas such as equipment bays and wrapped around ducts that might not otherwise be considered within a specific compartment. The flame propagation provisions of this proposal would apply to all transport category airplanes, regardless of size or passenger capacity, since the consequences of an inflight fire are not related to those factors.

Burnthrough

Lower Half: The FAA has considered whether to make the burnthrough requirement applicable to only certain areas of the fuselage; that is, those areas considered to be most susceptible to penetration by an external fire. The lower portion of the fuselage is the most susceptible to burnthrough from an external fuel fire because flames from

such a fire would typically impinge on the fuselage from below. Therefore, the lower portion would derive the most benefit from enhanced burnthrough protection. Although the additional costs associated with providing this same protection to the remainder of the airplane are not great, the benefits would be negligible. Therefore, the proposed requirement for burnthrough protection would apply only to insulation materials installed in the lower half of the fuselage. It should be noted that the ''lower half'' is above the cabin floor for most airplanes. This point was chosen based on full-scale fire test data, as documented in the previously referenced reports, and the potential for the airplane to be off its landing gear. That is, in conditions of landing gear collapse, the airplane can roll significantly and the area most susceptible to burnthrough can be correspondingly higher on the fuselage than when the airplane is on its gear. By providing burnthrough protection for the lower half of the fuselage, this situation is also accounted for.

Applicability: The FAA considers that the requirement for burnthrough protection should be made applicable only to airplanes with a passenger capacity of 20 or greater. This effectively excludes the smaller transport category airplanes, as well as airplanes operating in an all-cargo mode. The primary reason for this is that airplanes with small passenger capacities are not expected to realize a significant benefit from enhanced burnthrough protection owing to their very rapid evacuation capability; that is, they have a favorable exit-to-passenger ratio. Since it is expected that enhanced burnthrough protection will impose additional cost, there must be a commensurate benefit to justify such a proposal. The FAA does not consider that such benefits are substantial for airplanes with low passenger capacities. The specific discriminant of 20 passengers was chosen to be consistent with other occupant safety regulations, such as those for interior materials and cabin aisle width. The FAA considers that the evacuation capability of airplanes with 20 or more passengers, regardless of the exit arrangement, could be improved by enhanced burnthrough protection. The FAA invites comments on this aspect of the proposal.

Installation Details: For new designs, the proposed new burnthrough test method would apply to the insulation as installed on the airplane. Thus, consistent with similar flammability testing of other installed materials, the means intended to be used for fastening the insulation to the fuselage would have to be accounted for when performing tests. For consistency, the test method would impose a standard methodology for fastening. In addition to this proposal, the FAA is developing advisory material concerning the installation of insulation that would enable the installer to avoid a specific test on the fasteners, etc. Although failures of fasteners or seams during this test may not exacerbate flame propagation characteristics, such failures could adversely affect the burnthrough protection capability. Since research has shown practical fastening means are available for ensuring that the insulation material remains in place, it is proposed that fastening means be considered for newly manufactured airplanes.

Fuselage Burnthrough Alternative: This proposed rule would establish a standard for thermal/acoustic insulation that addresses that material's ability to resist penetration of an external flame, rather than a rule for fuselage burnthrough per se. This distinction is important, since fuselage burnthrough is a complex process, dependent on many variables. For example, the ability of the fuselage to resist penetration from an external fuel fire is directly related to the thickness and material of the skin. Skin thickness varies considerably, and essentially means that each airplane type has different burnthrough resistance. In addition, factors internal to the airplane can also affect penetration of an external fire into the occupied areas. For example, differences in the air return grills can influence the time required for an external fire to penetrate the occupied area. Therefore, establishing a minimum standard for fuselage burnthrough resistance and identifying possible means of compliance would be a highly complex undertaking.

This notice proposes a simple standard that has been shown to increase the time it takes for a fire to penetrate the airplane beyond what currently exists, regardless of the specific capability that currently exists. Since this increase in time can be achieved by addressing thermal/acoustic insulation material, and since this proposal would revise the standard for insulation to address flame propagation anyway, it is in the public interest to incorporate criteria that enhance the overall level of safety and that can be achieved with reasonable cost. Therefore, the standards proposed in this notice address two aspects of fire safety related to insulation material.

Although this proposal does not require that insulation be installed, it would enhance the overall level of safety of the airplane when insulation is installed. Because of the need to provide a suitable thermal and acoustical environment inside the airplane, the FAA considers it extremely unlikely that insulation would be removed as a means to avoid compliance with this rule. In fact, the removal of insulation material was considered as an option to address the flame propagation issues, but was rejected since it would effectively diminish the burnthrough capability that currently exists. Should removal of insulation become a common practice, the FAA will revisit the need for a specific fuselage burnthrough standard.

Equivalency (Applies to Both Burnthrough and Flame Propagation)

The proposed changes to appendix F include a provision for FAA-approved equivalent methods. This provision, which is included in other parts of appendix F, is intended to allow for the incorporation of improvements to the test methods as they are identified, without requiring specific findings of equivalent level of safety under 14 CFR 21.21. Experience has shown that such improvements frequently originate with the IAMFTWG and are readily adopted by the industry. It should be noted that the proposed standards of appendix F constitute the basic requirement, and that such equivalent methods that might be developed would have to be adopted in total. It would not be acceptable to selectively adopt portions of a modified test method that has been found to be equivalent and not all of the modified method. The determination of an acceptable equivalent method would be made by the FAA.

Proposed Operating Requirements

In addition to changing the design standards for future type certificate applications, the FAA considers that the benefits from improved flammability standards can be realized for existing designs, as well. The technology exists today so that these benefits can be obtained in a cost effective manner by applying the standards under some circumstances to newly manufactured airplanes and to existing airplanes when insulating materials are replaced. The FAA's means for obtaining benefits earlier than would be provided by changing design standards is to revise the operating rules. Requirements for newly manufactured airplanes become a basic airworthiness requirement for those airplanes and apply throughout their service life. Requirements proposed for the existing fleet relate to materials that are replaced in service. This latter aspect of the proposal would

not affect newly manufactured airplanes, since they would already be required to comply by virtue of their date of manufacture.

Flame Propagation

New Production: The FAA proposes that newly manufactured airplanes entering the fleet in parts 91, 121, 125, and 135 service be required to comply with the new standards relative to flame propagation. Since there are materials currently available that will meet the proposed standards, this requirement would impose minimal additional costs. This requirement would apply to airplanes manufactured more than two years after the effective date of the final rule. Two years is considered sufficient time to allow for material production capacity to be developed and disposition of existing inventory.

It should be noted that this proposal differs from previous rulemaking related to flammability of materials in that the applicability to newly manufactured airplanes is not limited to operations under part 121. However, in this case the proposal would effectively add no cost, and the potential for an inflight fire is not limited to air carrier operations. The FAA invites comments on this aspect of the proposal.

Replacement: Amendments to parts 91, 121, 125, and 135 are proposed to require that insulation materials, when installed as replacements, meet the new flame propagation test requirements of § 25.856. This proposal would provide for the gradual attrition of earlier materials. Since there are existing materials that meet the proposed standards, and since those materials cost and weigh no more than other materials, this should result in no additional cost to operators.

As with newly manufactured airplanes, it is appropriate to address not only those airplanes operated in part 121 air carrier service, but other operations as well, since the flame propagation portion of this proposal would enhance safety over the current regulatory requirements, and can be done at no cost. The language in proposed changes to part 121 differs from that in other parts to make it clear that the replacement aspect of this proposal does not in any way provide relief from the basic requirements for newly manufactured airplanes. As discussed below, part 121 differs from other parts in that airplanes manufactured after a specified date (four years after the effective date of the final rule) would have to comply with the burnthrough protection standard, as well as the flame propagation standard, and these requirements would also apply to replacement materials subsequently installed in those airplanes. To avoid possible confusion, the requirement for replacement materials to comply only with the flame propagation standard would apply to airplanes manufactured before the specified date.

Although it is difficult to quantify the benefits of piecemeal replacement of materials, in this case the benefit is without cost and adds no burden. In order to allow for attrition of current inventories and acquisition of the new materials, the FAA is proposing a 2-year compliance time, after which insulation materials that are replaced would have to be replaced with materials meeting the new flame propagation standards. This requirement is expected to apply to a relatively small amount of materials that are replaced every year. As with newly manufactured airplanes, two years is considered sufficient time to allow for material production capacity to be developed and disposition of existing inventory.

Burnthrough Protection

New Production: The FAA also proposes that newly manufactured airplanes entering the fleet in part 121 operations be required to comply with the new standards relative to burnthrough protection. This requirement would apply to airplanes manufactured more than 4 years after the effective date of the final rule. Although there are materials currently available that will meet the proposed standards, these materials are not widely used. Therefore, the burnthrough portion of the proposal is expected to require both material and, in many cases, design changes to implement. As discussed in the context of the proposed part 25 changes, these design changes relate primarily to the means of fastening the insulation to the fuselage structure. For those airplanes that require design changes, the FAA recognizes that adequate time is necessary to perform the necessary engineering and to obtain approval for the changes. Four years is considered a reasonable time to implement any design changes and configuration control measures required to account for the new standard, and to allow for material availability.

Generally, airplanes operated under parts 91, 125, and 135 carry fewer passengers than airplanes operating under part 121 and can, as a result, be evacuated more quickly. Therefore, the FAA considers that the additional evacuation time provided by enhanced fuselage burnthrough protection would not provide the same increase in safety for these airplanes. In light of the costs associated with requiring compliance with the burnthrough standard, imposing the requirement would not be cost effective. This conclusion is similar to the conclusion, discussed in the context of the proposed part 25 burnthrough standard, not to impose the new standard for airplanes with fewer than 20 passengers. However, since transport category airplanes can be operated under different regulatory requirements throughout their service life, it is likely that most, if not all, affected newly manufactured transport category airplanes would comply, in order to account for potential future part 121 operations. The FAA invites comments on this aspect of the proposal.

Replacement: This proposal does not include a requirement to use materials complying with the burnthrough test standards because the FAA considers that such a requirement would not be cost effective. If the fuselage is subjected to an external fire, it is unlikely that insulation complying with this standard that has been installed in a portion of the fuselage would significantly delay burnthrough if the rest of the fuselage contains insulation that does not comply with the new standard. As discussed previously, in order to be effective against burnthrough, new insulation materials would also have to be installed in a manner that would allow them to remain in place when exposed to an external fire. Requiring that the means of fastening, and the associated engineering necessary to incorporate design changes, be accounted for on a material replacement basis would not be cost effective.

Date of Manufacture

For the purposes of this proposal, the date of manufacture is considered to be the date on which inspection records show that an airplane is in a condition for safe flight. This is not necessarily the date on which the airplane is in conformity with the approved type design, or the date on which a certificate of airworthiness is issued, since some items not relevant to safe flight, such as passenger seats, may not be installed at that time. It could be earlier, but would be no later, than the date on which the first flight of the airplane occurs. This definition has been used in previous rulemaking, including the preamble to Amendment 121–247, Improved Flammability Standards for Materials Used in the Interiors of Transport Category Airplanes, (60 FR 6616), § 121.312 and § 121.343, Flight recorders.

Paperwork Reduction Act

In accordance with the Paperwork Reduction Act of 1995 (44 U.S.C 3507(d)), the FAA has determined that there are no requirements for information collection associated with this proposed rule.

International Compatibility

In keeping with U.S. obligations under the Convention on International Civil Aviation, it is FAA policy to comply with International Civil Aviation Organization (ICAO) Standards and Recommended Practices to the maximum extent practicable. The FAA has determined that there are no ICAO Standards and Recommended Practices that correspond to these proposed regulations.

Regulatory Evaluation Summary

Changes to Federal regulations must undergo several economic analyses. First, Executive Order 12866 directs that each Federal agency shall propose or adopt a regulation only upon a reasoned determination that the benefits of the intended regulation justify its costs. Second, the Regulatory Flexibility Act of 1980 requires agencies to analyze the economic effect of regulatory changes on small entities. Third, the Unfunded Mandates Reform Act of 1995 (Pub. L. 104–4) requires each Federal agency to prepare a written assessment of the effects of any Federal mandate in a proposed or final agency rule that may result in the expenditure by State, local, or tribal governments, in the aggregate, or by private sector, of $100 million or more annually (adjusted for inflation). These analyses have been completed, are summarized below, and fully discussed in the full regulatory evaluation. The FAA invites the public to provide comments and supporting data on the assumptions made in this evaluation. All comments received will be considered in the final regulatory evaluation.

Costs of Proposed Rule

Testing results at the FAA's Technical Center show that insulation materials are commercially available that will meet the FAA's proposed requirements for both flame propagation and burnthrough. The estimates presented below are preliminary and may overstate the actual material costs to affected operators, because other, less expensive materials may be developed as the proposed tests become known. The FAA solicits information from manufacturers, air carriers, and insulation blanket manufacturers to refine these estimates.

Insulation Material Unit Costs and Weights

Insulation material costs are a function of the size of the airplane and its thermal and acoustical needs, which, in turn, depend on the configuration of the airplane, its performance characteristics, and its utilization. Based on dimensional, material weight, and cost information received from airplane manufacturers, air carriers, and insulation blanket manufacturers, and the results of testing by the FAA's Technical Center, the FAA has determined that some materials that would meet the proposed test requirements cost and weigh no more than materials currently being installed in newly-produced airplanes. Because the proposed rule would apply to newly-produced airplanes (*i.e.*, no airplanes would be removed from service for retrofit), only the incremental costs of these improved blankets and engineering costs to effect any design changes are attributable to the rule.

The FAA estimates that insulation blankets currently installed in transport category airplanes are composed of an average of 3 inches of fiberglass batting covered with a film. Under the proposed requirements for affected part 121 airplanes with 20 or more passenger seats, the FAA assumes that the blankets in the lower half of the fuselage would be composed of an average of 2 inches of fiberglass batting and 1 inch of Curlon® batting (a material that would meet the proposed requirements for burnthrough protection), and the blankets in the upper half would be composed of an average of 3 inches of fiberglass. Blankets would be enclosed in metalized PVF, a film shown to meet the proposed flame propagation requirements. Airplanes with fewer than 20 passenger seats would continue to have an average of 3 inches of fiberglass batting covered with metalized PVF film.

Other materials may also be used, but these may be more expensive or add substantial weight to the blankets. The FAA solicits information concerning the materials that would be used to comply with the proposed requirements.

The FAA has determined that there would be no incremental cost (for either materials or weight) of installing insulation in airplanes with fewer than 20 passenger seats, because some materials that are currently used would meet the proposed requirements for flame propagation. For airplanes with 20 or more passengers, the additional cost would be that of replacing 1 inch of fiberglass with 1 inch of Curlon®. Because Curlon® and fiberglass are comparable in weight, there would be no weight penalty associated with Curlon's® use.

Part 121 Airplanes Produced Between 2000 and 2019

In order to determine the number and types of transport category airplanes added to the U.S. air carrier (part 121) fleet during the years 2000–2019, the FAA reviewed its own forecast as well as those of Boeing and Airbus. The FAA estimated the number of airplanes that would be affected by the proposed rule and manufactured between 2000 and 2019.[1]

Of the estimated 10,943 newly produced N-registered transport category airplanes expected to join the part 121 fleet during that 20-year period, 8,781 would be required to have fuselage burnthrough protection. An estimated 2,162 newly-produced transport category airplanes with fewer than 20 seats would be exempt from this proposed requirement.

The FAA has determined that some insulation materials that are currently used would meet the proposed requirements for flame propagation; therefore, the FAA attributes no incremental costs from this requirement. The total discounted cost for these 8,781 airplanes that would be required to have burnthrough protection over 20 years is $52.6 million, or $22.6 million discounted to present value at seven percent. The annualized cost over 20 years is $2.1 million.

The proposed requirement for transport category airplanes operating under parts 91, 125, and 135 would be only for improved insulation meeting the proposed flame propagation standards, and the FAA has determined that there would be no incremental costs from this requirement.

Engineering Costs

Manufacturers would incur costs of changing installation drawings and production part numbers for the new insulation blankets of newly produced currently certificated airplanes.[2] Estimates of the time to accomplish these changes are a function of the size of the airplane and whether or not the blanket configuration would have to be changed. The process of accomplishing these tasks would involve a series of steps, including changing the drawings (part numbers and, when necessary, blanket configurations) and reviews and

[1] These estimates include airplanes produced under new type certificates.

[2] There would be no costs attributable to the proposed rule for airplanes of new type designs, because these engineering costs are for changes to drawings.

approvals by various groups (*e.g.,* engineering, weight and balance, stress groups).

The FAA estimates that there would be 15 models of currently certificated airplanes in operation under part 121 at the time the proposed rule would be effective. (The FAA assumes there would be six models of two-engine narrowbody airplanes, six models of two-engine widebody airplanes, two of which would be cargo models, and three models of four-engine widebody airplanes.) The FAA estimates the burdened hourly rate for an engineer is $130. If only blanket materials change, the FAA estimates costs would total $13.8 million. If both blanket materials and their configurations change, the estimated costs would be $48.9 million. These costs would occur in the first 2 years after the effective date of the rule. Discounted costs, assuming half the cost would be incurred in 2000 and half in 2001, would range from $12.5 million to $44.2 million. The FAA solicits information concerning the engineering costs to part 121 airplane manufacturers, including information concerning the need for blanket configuration changes.

Because airplane models operated under part 125 are typically the same airplane models that are operated under part 121, there would be no additional engineering costs to those models. Manufacturers of other transport category airplanes, that is, those operating under parts 91 or 135, would also incur engineering costs. The FAA estimates these costs to be $750,000, or $678,000 discounted to present value.

Testing Equipment

Manufacturers of insulation blankets or blanket components would incur costs to test blankets or blanket components. Two tests are proposed: a flame propagation test and a burnthrough test.

The flame propagation test (also called the critical radiant flux test) is based on a test method developed for floor-covering systems, Standard Test Method ASTM E 648 for Critical Radiant Flux of Floor-Covering Systems using a Radiant Head Energy Source. The FAA's Technical Center has modified the test method for purposes of measuring flame propagation on insulation materials. A rig that is used for ASTM E 648 testing costs about $50,000. The FAA expects that airplane manufacturers, insulation blanket fabricators, and chemical company manufacturers would purchase or construct 12 of these modified rigs. The costs, therefore, would be $720,000. The FAA assumes that these costs would be incurred in the first year of the rule. Based on the assumption that the proposed rule would become effective in the year 2000, the costs of flame propagation testing equipment would be $673,000 discounted to present value.

The proposed burnthrough test was developed through the joint sponsorship of the FAA, the Civil Aviation Authority of the United Kingdom (UK), and the Direction Generale de l'Aviation Civile (DGAC) of France, with the FAA's Technical Center providing the test standardization. The equipment would include a gun-type test burner that uses kerosene for a fuel source and various components that measure heat flux, temperature, air velocity, and time. The test rig would be provided with an exhaust system to remove combustion products. The FAA estimates that the test apparatus would cost about $10,000. Again, the FAA expects that airplane manufacturers, insulation blanket fabricators, and chemical companies would purchase 12 rigs. The costs, therefore, would be $120,000 for 12 rigs, or $112,000 discounted to present value.

Manufacturers currently have facilities and personnel that conduct blanket certification testing; therefore, the FAA has attributed no other costs to testing materials.

Total Costs of the Proposed Rule

If only blanket material changes are made, the total costs over the years 2000–2019 are $68.0 million, or $36.5 million discounted to present value. Improved insulation costs account for about 77 percent of total nondiscounted costs, while engineering costs account for 21 percent and testing equipment accounts for 1 percent.

If manufacturers need to make configuration changes as well as material changes to their drawings, the FAA estimates that total costs would be $103.1 million over the years 2000–2019, or $68.2 million discounted to present value. In this scenario, engineering costs account for 51 percent of total nondiscounted costs, improved insulation costs account for 48 percent, and testing equipment accounts for 1 percent.

In both scenarios, the greatest costs would be incurred during the first 2 years after the effective date, when airplane and insulation blanket manufacturers and testing labs would incur costs. On a per airplane basis, the costs would average between $6,200 and $9,400, depending on whether or not configuration changes were needed.

Benefits of the Proposed Rule

On September 2, 1998, Swissair Flight 111 crashed off the coast of Nova Scotia, Canada, with a loss of 229 lives.

Although the Transportation Safety Board of Canada has not released its report of the probable causes of the Swissair accident, preliminary evidence points to burning thermal/acoustical insulation above the cockpit ceiling as contributing to the crash. The airplane, a McDonnell Douglas MD–11, used insulation blankets composed of fiberglass covered with metalized Mylar®. The FAA considers that replacement of metalized Mylar® may be necessary and is proceeding to address the affected material by airworthiness directive.

There have been other reports of fires in which the flammability of the thermal/acoustical insulation was a contributing factor. These accidents and incidents indicate that the flammability of the thermal/acoustic insulation can be a significant factor in contributing to the spread of a fire, either inflight or after a crash. The proposed rule would reduce those threats by requiring newly produced airplanes to use improved insulation that passes the proposed requirements for flame propagation and fuselage burnthrough.

The FAA, in conjunction with the CAA–UK and the DGAC of France, conducted research to assess the current capability of airplane fuselages to resist burnthrough from an external fuel fire. That research demonstrated the importance of thermal/acoustic insulation in the burnthrough process. Without making any other change to the airplane, these studies showed that improved thermal/acoustic insulation can delay the entry of a post-crash fuel fire by several minutes, thus prolonging the time available for escape. Although there are other factors that affect fuselage burnthrough, it was demonstrated that the simplest and most effective approach to improving burnthrough resistance was to improve the fire resistance of the insulation.

A study by R.G.W. Cherry & Associates Limited examined the International Cabin Safety Research Technical Group's Survivable Accidents Database to identify and extract data for airplane accidents where fuselage burnthrough was an issue in the survivability of the occupants. A burnthrough accident was defined as: ''An aircraft accident where the fuselage skin was penetrated by an external fire while live occupants were on board.'' A survivable accident is one ''where there were one or more survivors or there was potential for survival.'' Only survivable

or potentially survivable accidents in which there were fire injuries were selected for analysis.

Seventeen accidents involving 2,201 occupants and occurring between 1966 and 1993 were identified by Cherry & Associates. In analyzing accidents, Cherry & Associates took into account improvements that might have been made to numbers of fatalities and injuries if the airplanes had been configured to later requirements. These later requirements were:

- Floor proximity lighting/marking
- Seat cushion flammability
- Reduced heat release of cabin interior materials
- Improved access to type III exits

Cherry & Associates derived benefits based on the airplane standards at the time of the accident and on airplanes assumed to be configured to later requirements. Because the proposed rule would apply to newly produced airplanes, the results based on later requirements are those used in the FAA's benefits analysis.

Of the 140 worldwide fire related fatal accidents in the International Cabin Safety Research Technical Group's Survivable Accidents Database at the time of Cherry & Associate's study, only 54 percent had sufficient data to assess whether burnthrough occurred. Assuming the accidents that did not have sufficient data have a similar benefit potential to those that do, the actual benefits would be 1.85 times (1/0.54) the analyzed benefits.

The FAA's Technical Center has determined that the burnthrough protection requirements of this proposed rule would provide an additional 4 minutes for occupants to exit an airplane. Cherry & Associates' analysis shows that an additional 4 minutes would result in 10.1 lives saved per year worldwide. Because the proposed rule would apply only to newly produced airplanes of U.S. registry, the FAA has adjusted this estimate downward.

The Cherry report states that the authors do not believe that ''* * * the number of fatalities and injuries will change markedly for the near future.'' The FAA disagrees. Based on FAA and industry forecasts, the number of transport category passenger airplanes in the world fleet is expected to grow by 109 percent over the years 2000—2019, while the number of airplanes in the U.S. fleet is expected to grow by 97 percent. The number of passengers enplaned by U.S. carriers is expected to grow by 107 percent. Therefore, the FAA has estimated that Cherry's estimate of 10.1 lives saved per year would increase by about 2.157 percent per year or by 50 percent by 2019.

The FAA estimates that 37.2 fatalities that would have occurred on airplanes of U.S. registry would be avoided over 20 years by the proposed rule's requirement for burnthrough protection. Assuming society is willing to pay $2.7 million to avoid a fatality, burnthrough protection for the newly produced airplanes in the U.S. fleet would result in a nondiscounted total benefit of $100.5 million over the 20-year period, or $37.7 million discounted to present value.

There would also be benefits from the proposed flame propagation requirement. As several of the incidents and accidents reviewed for this analysis and described in the complete regulatory evaluation show, the potential for ignition from electrical arcing or other sources can be high. The proposed flame propagation requirements would ensure that, if ignition occurred, the resultant flame would not spread on the thermal/acoustic insulation.

The FAA is unable to quantify these benefits. However, preventing the loss of one airplane and its passengers over the 20-year period is not unlikely. Assuming such a loss would occur at the midpoint of the analysis, or in 2009, with 169 passengers, the nondiscounted loss would be $455.5 million, or $231.5 million discounted to present value (again, assuming society's willingness to pay $2.7 million to avoid a fatality). This loss does not include the value of the airplane. Even without loss of life, as several of the incidents show, a hull loss could exceed tens of millions of dollars. The FAA therefore has determined that this proposed rule would be cost beneficial.

Initial Regulatory Flexibility Determination

The Regulatory Flexibility Act of 1980 (FRA) establishes ''as a principle of regulatory issuance that agencies shall endeavor, consistent with the objective of the rule and of applicable statutes, to fit regulatory and informational requirements to the scale of the businesses, organizations, and governmental jurisdictions subject to regulation.'' To achieve that principle, the RFA requires agencies to solicit and consider flexible regulatory proposals and to explain the rationale for their actions. The RFA covers a wide-range of small entities, including small businesses, not-for-profit organizations, and small governmental jurisdictions.

Agencies must perform a review to determine whether a proposed or final rule will have a significant economic impact on a substantial number of small entities. If the determination is that it will, the agency must prepare a regulatory flexibility analysis (RFA) as described in the RFA. However, if an agency determines that a proposed or final rule is not expected to have a significant economic impact on a substantial number of small entities, section 605(b) of the 1980 act provides that the head of the agency may so certify and an RFA is not required. The certification must include a statement providing the factual basis for this determination, and the reasoning should be clear.

The FAA conducted the required review of this proposed rule. The engineering costs would be incurred by manufacturers of transport category airplanes, none of whom is a small entity. Testing equipment costs would be incurred by airplane manufacturers, insulation blanket fabricators, and chemical companies. The FAA has determined that none of these entities that are expected to conduct testing is small. Finally, the cost of a newly produced passenger airplane outfitted with burnthrough protection would be greater because of the proposed rule. The FAA cannot determine who would purchase these airplanes, but the incremental cost of burnthrough protection would not exceed $11,000 (in a four-engine widebody), an amount that would represent an insignificant percentage of the total cost of a new airplane.

Accordingly, pursuant to the Regulatory Flexibility Act, 5 U.S.C. 605(b), the Federal Aviation Administration certifies that this proposed rule would not have a significant economic impact on a substantial number of small entities.

International Trade Impact Assessment

The provisions of this proposed rule would have little or no impact on trade for U.S. firms doing business in foreign countries and foreign firms doing business in the United States.

Unfunded Mandates Reform Act

Title II of the Unfunded Mandates Reform Act of 1995 (the Act), enacted as Public Law 104–4 on March 22, 1995, requires each Federal agency, to the extent permitted by law, to prepare a written assessment of the effects of any Federal mandate in a proposed or final agency rule that may result in the expenditure by State, local, and tribal governments, in the aggregate, or by the private sector, of $100 million or more (adjusted annually for inflation) in any 1 year. Section 204(a) of the Act, 2 U.S.C. 1534(a), requires the Federal

agency to develop an effective process to permit timely input by elected officers (or their designees) of State, local, and tribal governments on a proposed ''significant intergovernmental mandate.''

A ''significant intergovernmental mandate'' under the Act is any provision in a Federal agency regulation that would impose an enforceable duty upon State, local, and tribal governments, in the aggregate, of $100 million (adjusted annually for inflation) in any 1 year. Section 203 of the Act, 2 U.S.C. 1533, which supplements section 204(a), provides that before establishing any regulatory requirements that might significantly or uniquely affect small governments, the agency shall have developed a plan that, among other things, provides for notice to potentially affected small governments, if any, and for a meaningful and timely opportunity to provide input in the development of regulatory proposals.

This proposed rule does not contain any significant Federal intergovernmental or private sector mandate. Therefore, the requirements of Title II of the Unfunded Mandates Reform Act of 1995 do not apply.

Executive Order 13132, Federalism

The FAA has analyzed this proposed rule under the principles and criteria of Executive Order 13132, Federalism. The FAA has determined that this action would not have a substantial direct effect on the States, on the relationship between the national Government and the States, or on the distribution of power and responsibilities among the various levels of government. Therefore, the FAA has determined that this notice of proposed rulemaking would not have federalism implications.

Environmental Analysis

FAA Order 1050.1D defines FAA actions that may be categorically excluded from preparation of a National Environmental Policy Act (NEPA) environmental assessment or environmental impact statement. In accordance with FAA Order 1050.1D, appendix 4, paragraph 4(j), this rulemaking action qualifies for a categorical exclusion.

Energy Impact

The energy impact of the proposed rule has been assessed in accordance with the Energy Policy and Conservation Act (EPCA) and Public Law 94–163, as amended (42 U.S.C. 6362). It has been determined that it is not a major regulatory action under the provisions of the EPCA.

Regulations Affecting Intrastate Aviation in Alaska

Section 1205 of the FAA Reauthorization Act of 1996 (110 Stat. 3213) requires the Administrator, when modifying regulations in Title 14 of the CFR in a manner affecting intrastate aviation in Alaska, to consider the extent to which Alaska is not served by transportation modes other than aviation, and to establish such regulatory distinctions as he or she considers appropriate. Because this proposed rule would apply to the certification of future designs of transport category airplanes and their subsequent operation, it could, if adopted, affect intrastate aviation in Alaska. The FAA therefore specifically requests comments on whether there is justification for applying the proposed rule differently to intrastate operations in Alaska.

List of Subjects

14 CFR Part 25

Aircraft, Aviation safety, Reporting and recordkeeping requirements.

14 CFR Part 91

Aircraft, Aviation safety, Reporting and recordkeeping requirements.

14 CFR Part 121

Aircraft, Aviation safety, Reporting and recordkeeping requirements, Safety, Transportation.

14 CFR Part 125

Aircraft, Aviation safety, Reporting and recordkeeping requirements.

14 CFR Part 135

Aircraft, Aviation safety, Reporting and recordkeeping requirements.

The Proposed Amendments

In consideration of the foregoing, the Federal Aviation Administration proposes to amend parts 25, 91, 121, 125, and 135 of Title 14 of the Code of Federal Regulations as follows:

PART 25—AIRWORTHINESS STANDARDS: TRANSPORT CATEGORY AIRPLANES

1. The authority citation for part 25 continues to read as follows:

Authority: 49 U.S.C. 106(g), 40113, 44701–44702, and 44704.

2. Amend § 25.853 by revising paragraph (a) to read as follows:

§ 25.853 Compartment interiors.

* * * * *

(a) Except for thermal/acoustic insulation materials, materials (including finishes or decorative surfaces applied to the materials) must meet the applicable test criteria prescribed in part I of appendix F of this part, or other approved equivalent methods, regardless of the passenger capacity of the airplane.

* * * * *

3. Amend § 25.855 by revising paragraph (d) to read as follows:

§ 25.855 Cargo or baggage compartments.

* * * * *

(d) Except for thermal/acoustic insulation materials, all other materials used in the construction of the cargo or baggage compartment must meet the applicable test criteria prescribed in part I of appendix F of this part or other approved equivalent methods.

* * * * *

4. Add § 25.856 to read as follows:

§ 25.856 Insulation materials.

Thermal/acoustic insulation material must meet the flame propagation test requirements of part VI of appendix F of this part, or other FAA-approved equivalent test requirements. In addition, for airplanes with a passenger capacity of 20 or greater, insulation materials (including the means of fastening the materials to the fuselage) installed in the lower half of the airplane fuselage must meet the flame penetration resistance test requirements of part VII of appendix F of this part, or other FAA-approved equivalent test requirements.

5. Amend appendix F to part 25 as follows:

a. In part I, paragraph (a)(1)(ii), by removing the words ''thermal and acoustical insulation and insulation covering'' and ''insulation blankets'' from the first sentence.

b. In part I, by removing and reserving paragraph (a)(2)(i).

c. By adding parts VI and VII to read as follows:

Appendix F to Part 25

* * * * *

Part VI–Test Method to Determine the Flammability and Flame Propagation Characteristics of Thermal/Acoustic Insulation Materials

This test method is used to evaluate the flammability and flame propagation characteristics of thermal/acoustic insulation when exposed to both a radiant heat source and a flame.

(a) *Definitions*—(1) *Thermal acoustic insulation.* Thermal/acoustic insulation is defined as a material or system of materials used to provide thermal and/or acoustic protection. Examples include a film-covering material encapsulating a core material such as fiberglass or other batting material and foams.

(2) *Radiant heat source.* The radiant heat source is an air-gas fueled radiant heat energy panel or equivalent.

(b) *Test apparatus* (as schematically shown in figure 1).

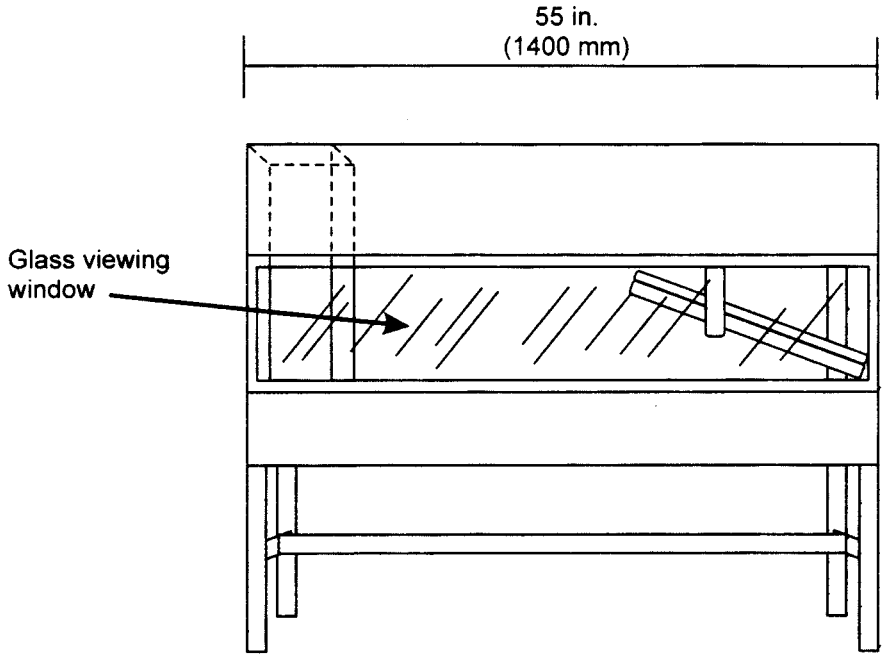

Figure 1 - Radiant Panel Test Chamber

(1) *Radiant panel test chamber.* Tests shall be conducted in a radiant panel test chamber (see figure 1). The test chamber shall be located under an exhaust hood to facilitate clearing the chamber of smoke after each test. The radiant panel test chamber shall consist of an enclosure 55 inches (1400 mm) long by 19.5 (500 mm) deep by 28 (710 mm) to 30 inches (maximum) (762 mm) above the test specimen. The sides, ends, and top shall be insulated with a fibrous ceramic insulation such as Kaowool M™ board. The front side shall be provided with an approximately 52- by 10-inch (1321 by 254mm) draft free, high temperature, glass observation window, to facilitate viewing the sample during testing. Below the window is a door, which provides access to the movable specimen platform holder. The bottom of the test chamber shall consist of a sliding steel platform, which has provisions for securing the test specimen holder in a fixed and level position. The chamber shall have an internal chimney with exterior dimensions of 5.1 inches (129mm) wide, by 16.2 inches (411 mm) deep by 13 inches (330mm) high at the opposite end of the chamber from the radiant energy source. The interior dimensions are 4.5 inches (114mm) wide by 15.6 inches (395mm) deep. The chimney extends to the top of the chamber (see figure 2).

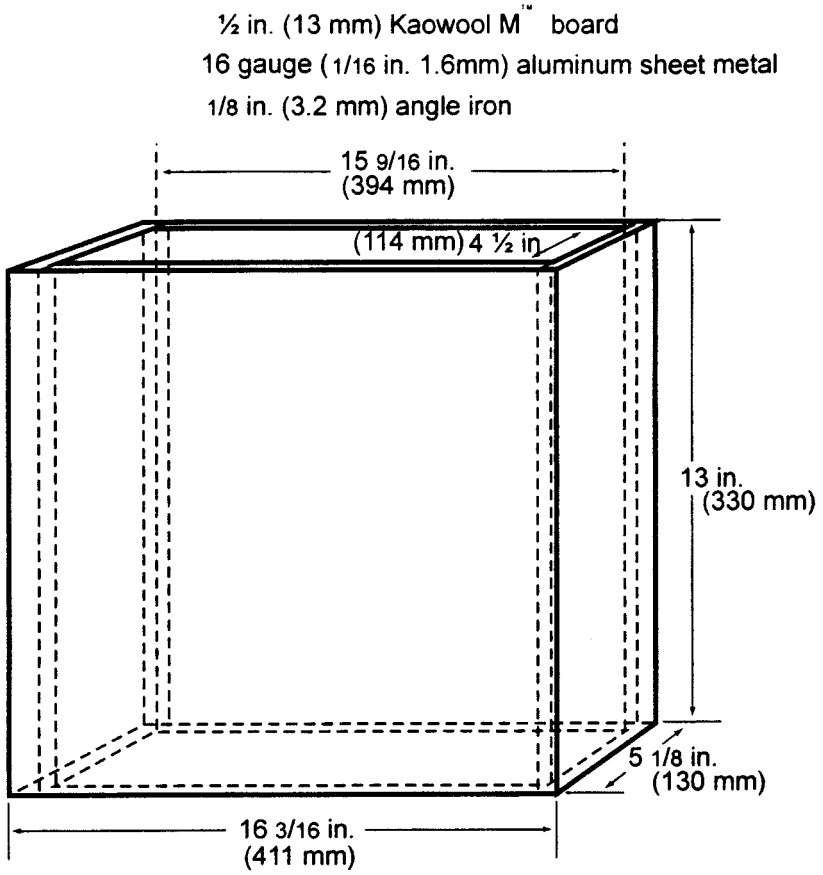

Figure 2 - Internal Chimney

(2) *Radiant heat source.* The radiant heat energy source shall be a panel of porous refractory material mounted in a cast iron frame or equivalent. The panel shall have a radiation surface of 12 by 18 inches (305 by 457mm). The panel shall be capable of operating at temperatures up to 1500°F (816°C). See figure 3. An equivalent panel must satisfy the calibration conditions and produce test results equivalent to the air-gas panel, for any material tested.

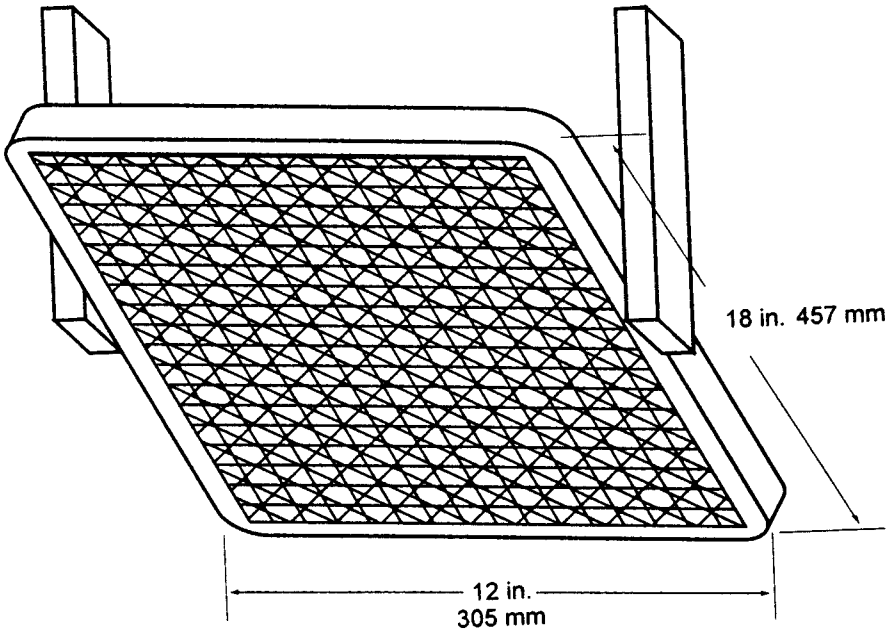

Figure 3a - Air-Propane Radiant Panel

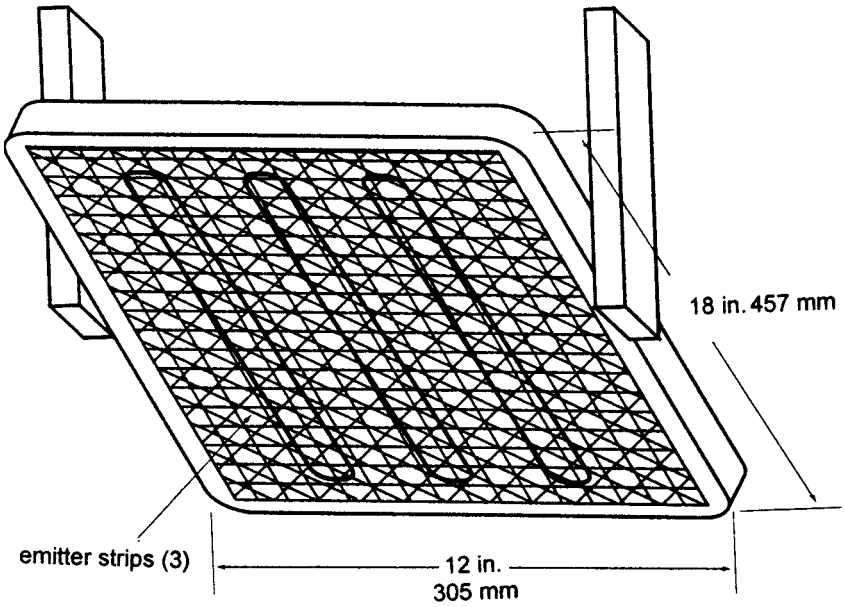

Figure 3b - Electric panel

(i) *Radiant panel heating system.* The radiant panel fuel shall be propane (liquid petroleum gas—2.1 UN 1075). The panel fuel system shall consist of a venturi-type aspirator for mixing gas and air at approximately atmospheric pressure. Suitable instrumentation will be necessary for monitoring and controlling the flow of fuel and air to the panel. Instrumentation shall include an air flow gauge, an air flow regulator, and a gas pressure gauge.

(ii) *Radiant panel placement.* The panel shall be mounted in the chamber at 30§ to the horizontal specimen plane.

(3) *Specimen holding system.* (i) The sliding platform serves as the housing for test specimen placement. Brackets may be attached (via wing nuts) to the top lip of the platform in order to accommodate various thicknesses of test specimens. A sheet of refractory material may be placed and supported by the lip in the open bottom (base) of the sliding platform for samples that do not require height compensation. The refractory material may be placed on the bottom of the brackets to hold the test specimen (for height requirement) if necessary. See figure 4.

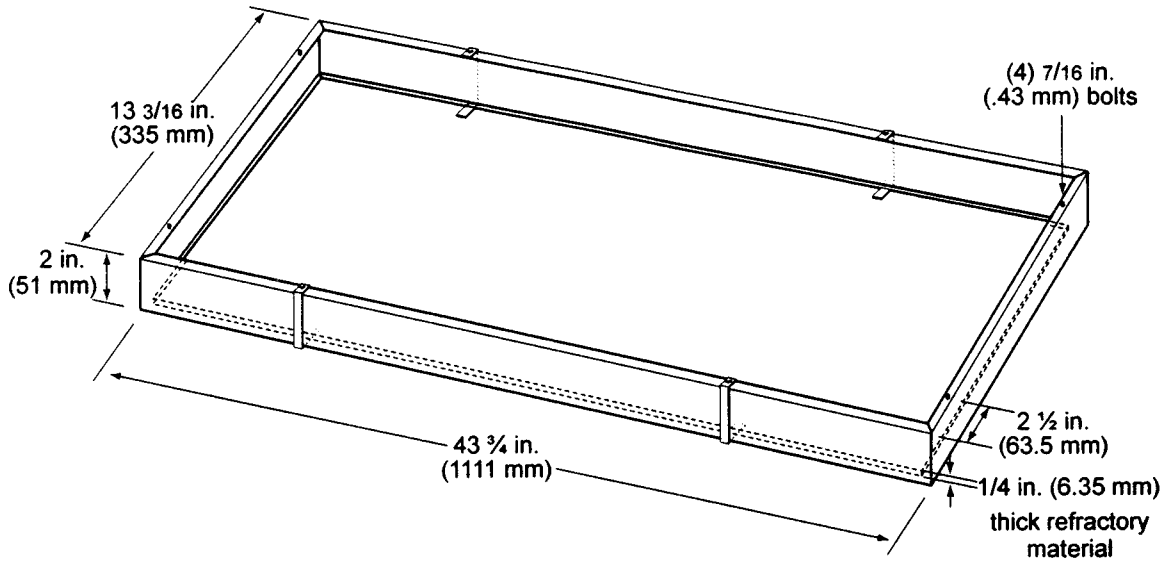

Figure 4 - Sliding Platform

(ii) A ½ inch (13mm) piece of Kaowool M™ board or other high temperature material measuring 41½ by 8¼ inches (1054 by 210mm) shall be attached to the back side of the platform. This board will serve as a heat retainer and will protect the test specimen from excessive preheating. The height of this board must not be too high such that it impedes the sliding platform movement (in and out) of the test chamber.

(iii) The test specimen shall be placed horizontally on the refractory base (or brackets). A stainless steel retaining frame (AISI Type 300 UNA–NO8330), or equivalent, having a thickness of 0.078 inches (1.98mm) and overall dimensions of 44 ¾ by 12¾ inches (1137 by 320mm) with a specimen opening of 40 by 7⅞ inches (1016 by 140mm) shall be placed on top of the test specimen. The retaining frame shall have two ½ inch (12.7mm) holes drilled at each end for positioning the frame to the two stud bolts at each end of the sliding platform. See figure 5.

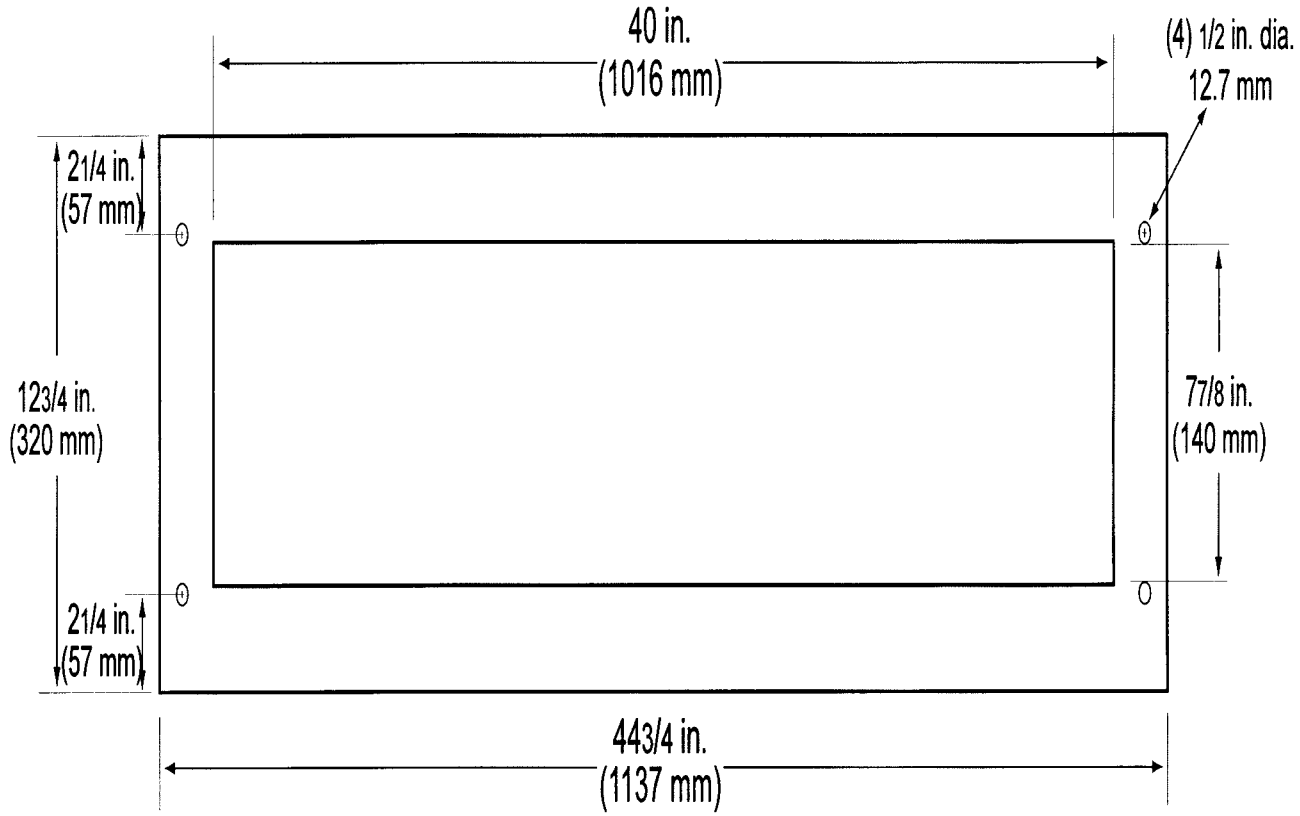

Figure 5 - Retaining Frame

(iv) A securing frame (acting as a clamping mechanism) constructed of mildsteel may be placed over the test specimen. The securing frame overall dimensions are 42½ by 10½ inches (1080 by 267mm) with a specimen opening of 39½ by 7½ inches (1003 by 190mm). Hence, the exposed area of test specimen exposed to the radiant panel is 39¼ by 7¼ inches (996 by 184mm). See figure 6. It is not necessary to physically fasten the securing frame over the test specimen due to the weight of the frame itself.

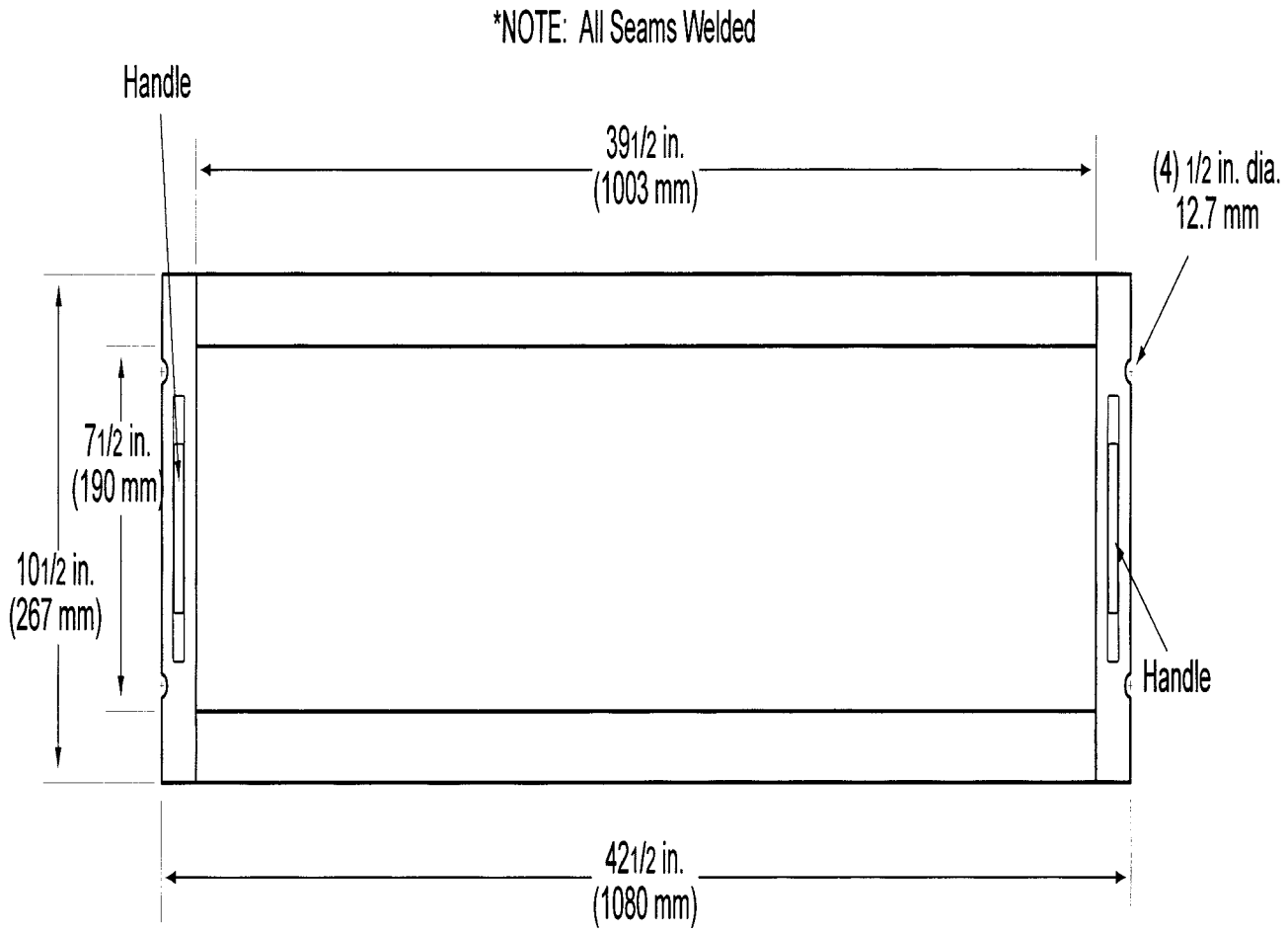

Figure 6 - Securing Frame

(4) *Pilot burner.* The pilot burner used to ignite the specimen is a Bernzomatic ™ commercial propane venturi torch with an axially symmetric burner tip having a propane supply tube with an orifice diameter of 0.006 inches (0.15mm). The length of the burner tube is 2⅞ inches (71mm). The propane flow is adjusted via gas pressure through an in-line regulator to produce a blue inner cone length of ¾ inch (19mm). A ¾ inch (19mm) guide (such as a thin strip of metal) may be spot welded to the top of the burner to aid in setting the flame height. There shall be a means provided to move the burner out of the ignition position so that the flame is horizontal and at least 2 inches (50mm) above the specimen plane. See figure 7.

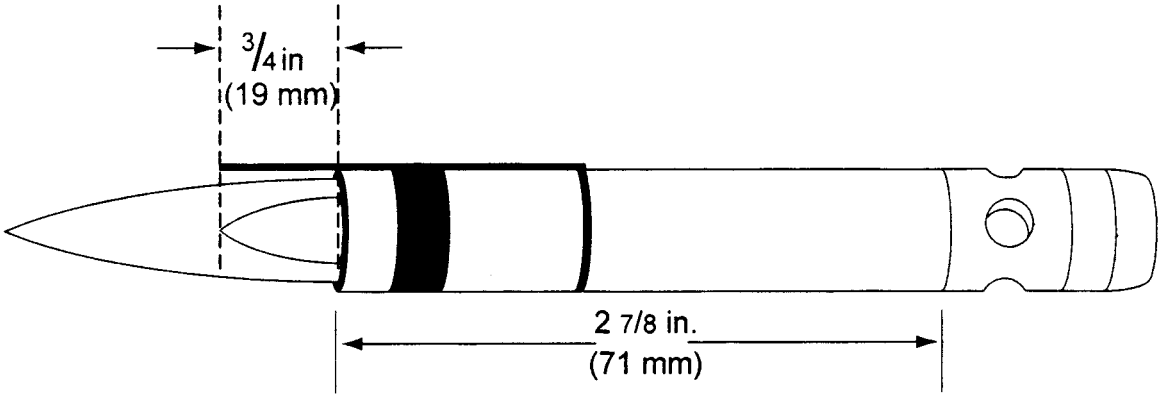

Figure 7 - Propane Pilot Burner

(5) *Thermocouples.* A 24 American Wire Gauge (AWG) Type K (Chromel-Alumel) thermocouple shall be installed in the test chamber for temperature monitoring. It shall be inserted into the chamber through a small hole drilled through the back of the chamber. The thermocouple shall be placed such that it extends 11 inches (279mm) out from the back of the chamber wall, 11½ inches (292mm) from the right side of the chamber wall, and is 2 inches (51mm) below the radiant panel. The use of other thermocouples is optional.

(6) *Calorimeter.* The calorimeter shall be a one inch cylindrical water-cooled, total heat flux density, foil type Gardon Gage that has a range of 0 to 5 BTU/ft ^{2}-second (0 to 5.6 Watts/cm^2).

(7) *Calorimeter calibration specification and procedure.*

(i) *Calorimeter Specification.*

(A) Foil diameter shall be 0.25 ±0.005 inches (6.35 ±0.13mm).

(B) Foil thickness shall be 0.0005 ±0.0001 inches (0.013 ±0.0025mm).

(C) Foil material shall be thermocouple grade Constantan.

(D) Temperature measurement shall be a Copper Constantan thermocouple.

(E) The copper center wire diameter shall be 0.0005 inches (0.013mm).

(F) The entire face of the calorimeter shall be lightly coated with ''Black Velvet'' paint having an emissivity of 96 or greater.

(ii) *Calorimeter calibration.*

(A) The calibration method shall be by comparison to a like standardized transducer.

(B) The standardized transducer shall meet the specification given in paragraph (b)(6) of this part of this appendix.

(C) It shall be calibrated against a primary standard by the National Institute of Standards and Technology (NIST).

(D) The method of transfer shall be a heated graphite plate.

(E) The graphite plate shall be electrically heated, have a clear surface area on each side of the plate of at least 2 by 2 inches (51 by 51mm), and be ⅛ inch ±1/16 inch thick (3.2 ±1.6mm).

(F) The 2 transducers shall be centered on opposite sides of the plates at equal distances from the plate.

(G) The distance of the calorimeter to the plate shall be no less than 0.0625 inches (1.6mm), nor greater than 0.375 inches (9.5mm).

(H) The range used in calibration shall be at least 0–3.5 BTUs/ft ^{2} second (0–3.9Watts/cm^2) and no greater than 0–5.6 BTUs/ft ^{2} second (0–5 Watts/cm^2.

(I) The recording device used must record the 2 transducers simultaneously or at least within 1/10 of each other.

(8) *Calorimeter Fixture.* With the sliding platform pulled out of the chamber, install the calorimeter holding frame. The frame is 13⅛ inches (333mm) deep (front to back) by 8 inches (203mm) wide and rests on the top of the sliding platform. It is fabricated of ⅛ inch (3.2mm) flat stock steel and has an opening that accommodates a ½ inch (12.7mm) thick piece of Kaowool M™ board, which is level with the top of the sliding platform. The board has three 1 inch (25.4mm) diameter holes drilled through the board for calorimeter insertion. The distance from the outside frame (right side) to the centerline of the first hole (''zero'' position) is 1⅞ inches (47mm). The distance between the centerline of the first hole to the centerline of the second hole is 2 inches (51mm). It is also the same distance from the centerline of the second hole to the centerline of the third hole. See figure 8.

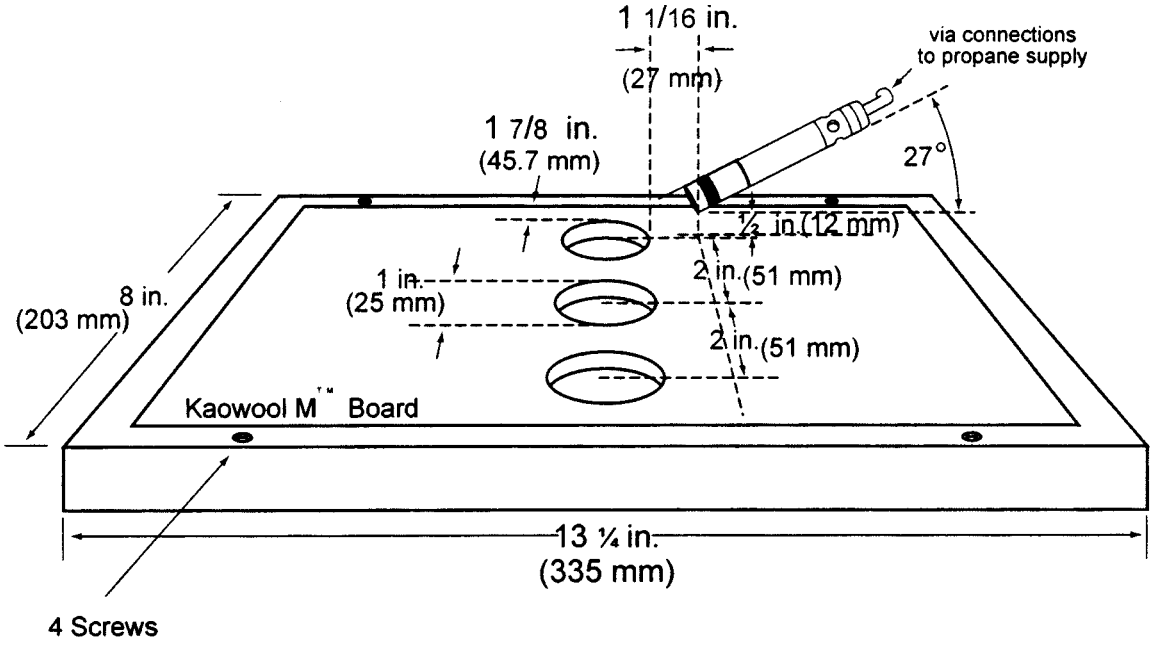

Figure 8 - Calorimeter Holding Frame

(9) *Instrumentation.* A calibrated recording device with an appropriate range or a computerized data acquisition system shall be provided to measure and record the outputs of the calorimeter and the thermocouple. The data acquisition system must be capable of recording the calorimeter output every second during calibration.

(10) *Timing device.* A stopwatch or other device, accurate to ±1 second/hour, shall be provided to measure the time of application of the pilot burner flame.

(c) *Test specimens.*

(1) *Specimen preparation.* A minimum of three test specimens shall be prepared and tested.

(2) *Construction.* Test specimens shall include all materials used in construction of the insulation (including batting, film, scrim, tape etc.). Cut a piece of core material such as foam or fiberglass, 43 inches long (1092mm) by 11 inches (279mm) wide. Cut a piece of film cover material (if used) large enough to cover the core material. There are a number of ways to prepare the sample. These include stapling the film cover around the ends (as the ends are not exposed to the radiant heat source), wrapping the core material and taping it at the bottom, and heat sealing the sample. The specimen thickness must be of the same thickness as installed in the airplane.

(d) *Specimen conditioning.* The specimens shall be conditioned at 70 ±5 °F (21 ±2 °C) and 55% ±10% relative humidity, for a minimum of 24 hours prior to testing.

(e) *Calibration.* (1) With the sliding platform out of the chamber, install the calorimeter holding frame. Push the platform back into the chamber and insert the calorimeter into the first hole (''zero'' position). See figure 8. Close the bottom door located below the sliding platform. The centerline of the calorimeter is 1⅞ inches (46mm) from the end of the holding frame. The distance from the centerline of the calorimeter to the radiant panel surface at this point is 7.5 inches ±⅛ (191 mm ±3). Prior to igniting the radiant panel, ensure that the calorimeter face is clean and that there is water running through the calorimeter.

(2) Ignite the panel. Adjust the fuel/air mixture to achieve 1.5 BTUs/ft^2-second ±5% (1.8 Watts/cm^2 ±5%) at the ''zero'' position. If using an electric panel, set the power controller to achieve the proper heat flux. Allow the unit to reach steady state (this may take up to 1 hour). The pilot burner is off during this time.

(3) After steady-state conditions have been reached, move the calorimeter 2 inches (51mm) from the ''zero'' position (first hole) to the second position and record the heat flux. Move the calorimeter to the third position and record the heat flux. Allow enough time at each position for the calorimeter to stabilize.

(4) Open the bottom door, remove the calorimeter and holder fixture. Use caution as the fixture is very hot.

(f) *Test procedure.* (1) Ignite the pilot burner. Ensure that it is at least 2 inches (51mm) above the top of the platform. The burner must not contact the specimen until the test begins.

(2) Place the test specimen in the sliding platform holder. Ensure that the test sample surface is level with the top of the platform. At ''zero'' point, the specimen surface is 7½ inches ±⅛ inch (191mm ±3) below the radiant panel.

(3) With film/fiberglass assemblies, it may be necessary to puncture small holes in the film cover to purge any air inside. This allows the operator to maintain the proper test specimen position (level with the top of the platform). The holes should be made in the sides/ and or the corners of the test specimen using a needle-like tool.

(4) Place the retaining frame over the test specimen. The securing frame may be used if the samples have been stapled and tend to shrink away from the radiant heat source. It may be necessary (due to compression) to adjust the sample (up or down) in order to maintain the distance from the sample to the radiant panel (7½ inches ±⅛ inch (191mm±3) at ''zero'' position).

(5) Immediately push the sliding platform into the chamber and close the bottom door.

(6) Bring the pilot burner flame into contact with the center of the specimen at the ''zero'' point and simultaneously start the timer. The pilot burner shall be at a 27° angle with the sample and be ½ inch (12mm) above the sample. See figure 8. A stop, as shown in figure 9, allows the operator to position the burner in the correct position each time.

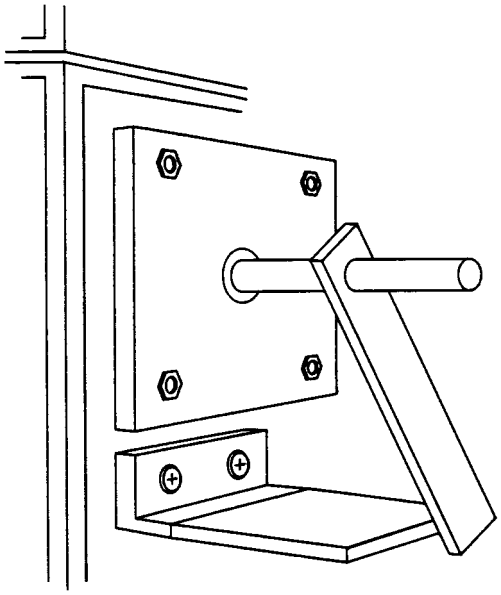

Figure 9 - Propane Burner Stop

(7) Leave the burner in position for 15 seconds and then remove to a position at least 2 inches (51mm) above the specimen.

(g) *Report.* (1) Identify and describe the specimen being tested.

(2) Report any shrinkage or melting of the test specimen.

(3) Report the flame time.

(4) Report the after flame time.

(h) *Requirements.* (1) No flaming beyond 2 inches (51mm) to the left of the centerline of the point of pilot flame application is allowed.

(2) Of the 3 specimens tested, only 1 specimen may have an after flame. That after flame may not exceed 3 seconds.

Part VII—Test Method to Determine the Burnthrough Resistance of Thermal/Acoustic Insulation Materials.

The following test method is used to evaluate the burnthrough resistance characteristics of aircraft thermal-acoustic insulation materials when exposed to a high intensity open flame.

(a) *Definitions*—(1) *Burnthrough time.* The burnthrough time is measured at the inboard side of each of the insulation blanket specimens. The burnthrough time is defined as the time required, in seconds, for the burner flame to penetrate the test specimen, and/or the time required for the heat flux to reach 2.0 Btu/ft^{2}sec on the inboard side, at a distance of 12 inches from the front surface of the insulation blanket test frame, whichever is sooner.

(2) *Specimen set.* A specimen set consists of two insulation blanket specimens. Both specimens must represent the same production insulation blanket construction and materials, proportioned to correspond to the specimen size.

(3) *Insulation blanket specimen.* The insulation blanket specimen is one of two specimens positioned in either side of the test rig, at an angle of 30° with respect to vertical.

(b) *Apparatus*—(1) *The arrangement of the test apparatus* is shown in figures 1 and 2 and shall include swinging the burner away from the test specimen during warm-up.

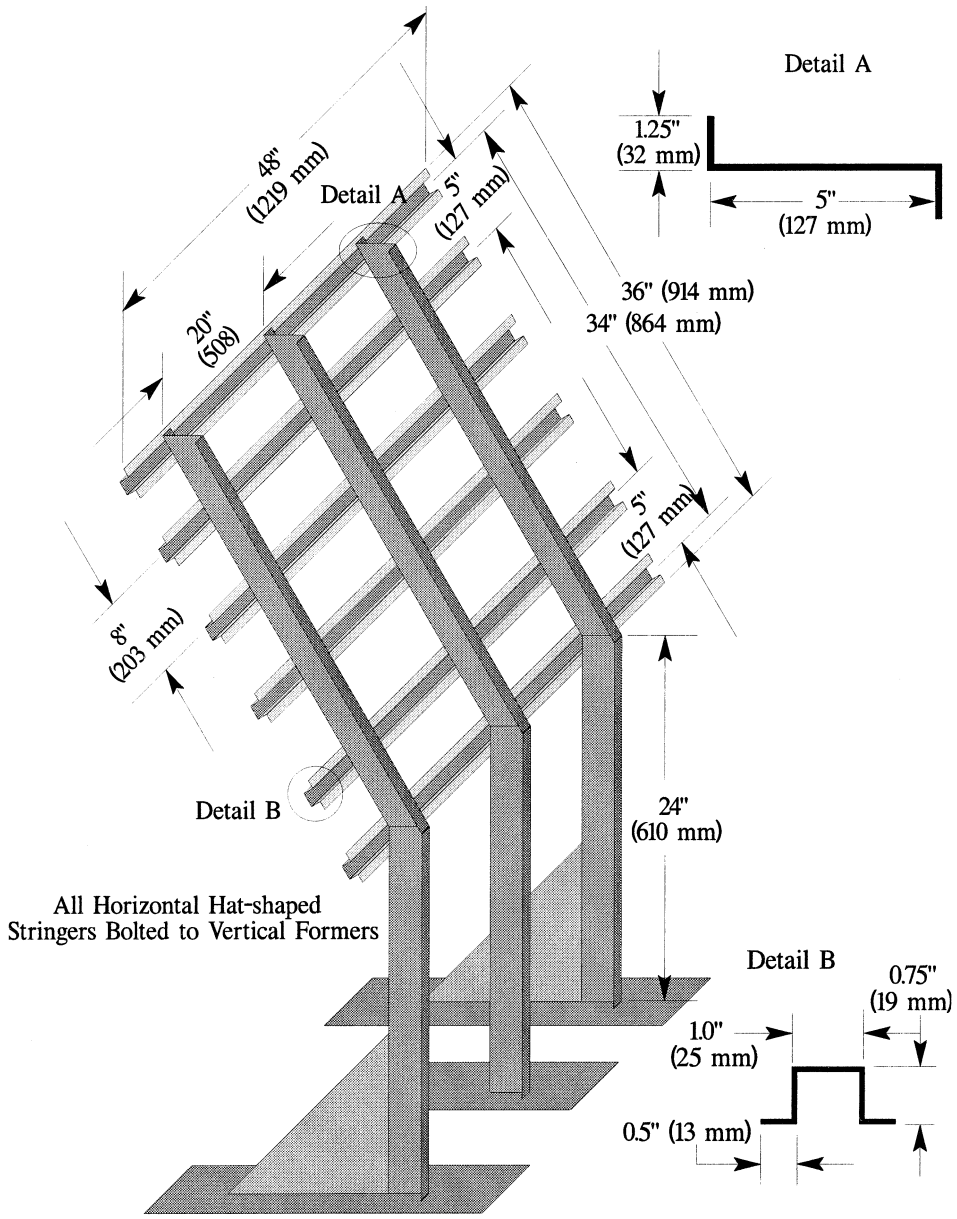

All Material 0.125" (3 mm) Thickness Except Center Vertical Former, 0.1875" (5 mm) Thick

Figure 1--Burnthrough Test Apparatus Specimen Holder

(2) *Test burner.* The test burner shall be a modified gun-type such as the Park Model DPL 3400. Flame characteristics may be enhanced with the optional use of a static disc turbulator or a temperature compensation fuel nozzle.

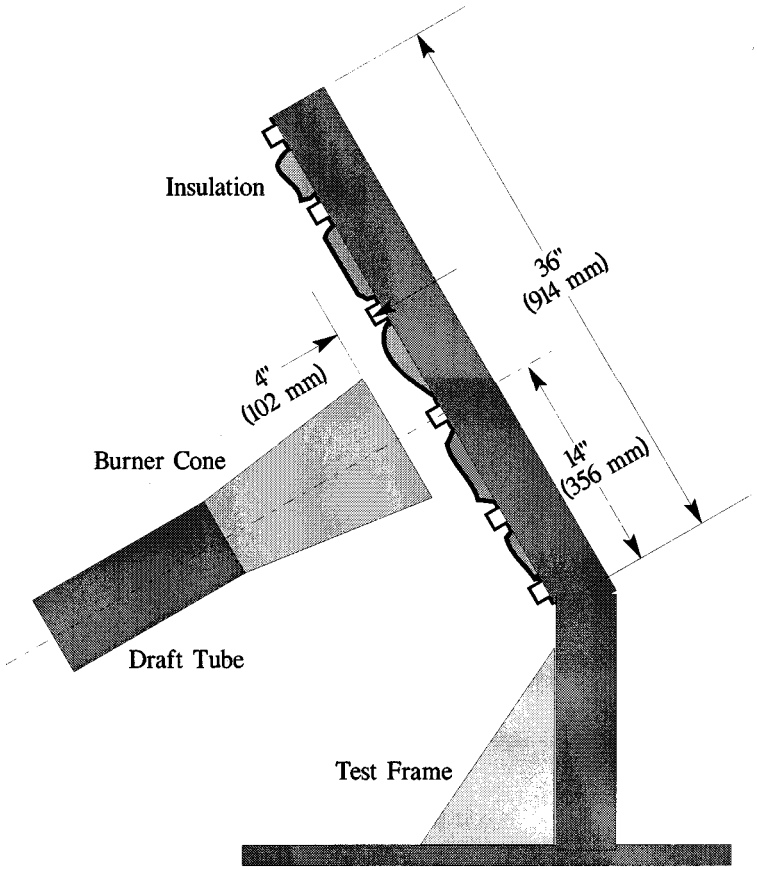

Figure 2--Burnthrough Test Apparatus

(i) *Nozzle.* A nozzle is required to maintain the fuel pressure to yield a nominal 6.0 gal/hr (0.378 L/min) fuel flow. A Monarch manufactured 80° PL (hollow cone) nozzle nominally rated at 6.0 gal/hr at 100 lb/in^2 (0.71 MPa) has been found to deliver a proper spray pattern. Minor deviations to the fuel nozzle spray angle, fuel pressure, or other similar parameters are acceptable if the nominal fuel flow rate and temperature and heat flux measurements conform to the requirements of paragraph (e) of this part of this appendix.

(ii) *Burner cone.* A 12 ±0.125-inch (305 ±6 mm) burner extension cone shall be installed at the end of the draft tube. The cone shall have an opening 6 ±0.125-inch (152 ±6 mm) high and 11 ±0.125-inch (280 ±6 mm) wide (figure 3).

BILLING CODE 4910–13–U

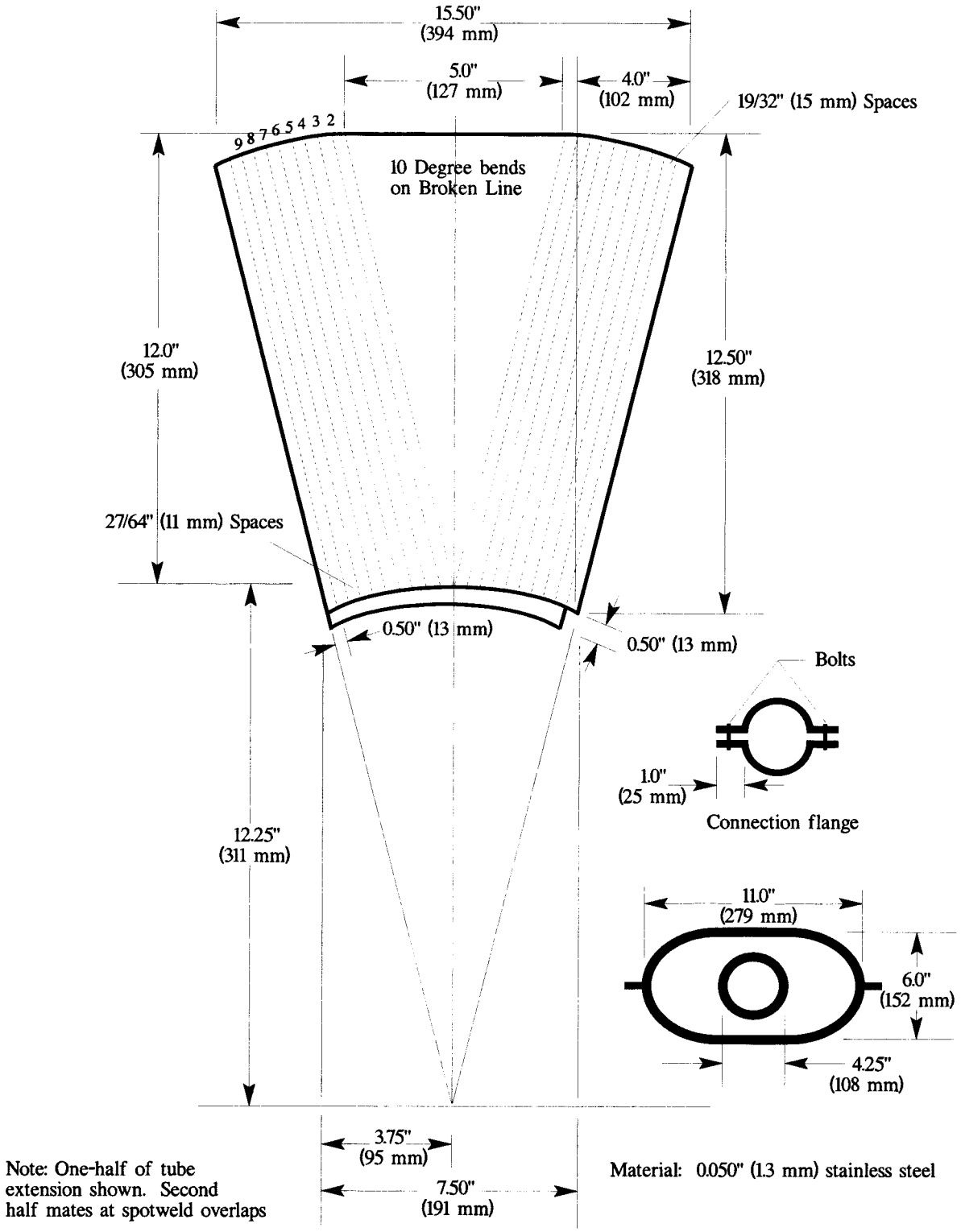

Figure 3--Burner Draft Tube Extension Cone

BILLING CODE 4910–13–C

(iii) *Fuel.* JP–8, Jet A, or their international equivalent has been found to satisfactorily deliver a 6.0 ±0.2 gal/hr flow rate. If this fuel is unavailable, ASTM K2 fuel (Number 2 grade kerosene) or ASTM D2 fuel (Number 2 grade fuel oil or Number 2 diesel fuel) are acceptable if the nominal fuel flow rate, temperature and heat flux measurements conform to the requirements of paragraph (e) of this part of this appendix.

(iv) *Fuel pressure regulator.* A fuel pressure regulator, adjusted to deliver 6.0 gal/hr (0.378 L/min) nominal, shall be provided. An operating fuel pressure of 100 lb/in^2 for a 6.0 gal/hr 80° spray angle nozzle (such as a PL type) has been found to be satisfactory to deliver 6.0 ±0.2 gal/hr (0.378 L/min).

(3) *Calibration rig and equipment.* (i) A calibration rig shall be constructed to incorporate a calorimeter and thermocouple rake for the measurement of both heat flux and temperature. A combined temperature and heat flux calibration rig enables a quick transition between these devices, so that the influence of air intake velocity on heat flux and temperature can be analyzed without necessitating removal of the calibration rig. Individual calibration rigs are also acceptable.

(ii) *Calorimeter.* The calorimeter shall be a total heat flux, foil type Gardon Gage of an appropriate range such as 0–20 Btu/ft^2-sec (0–22.7 W/cm^2), accurate to ±3% of the indicated reading. The heat flux calibration method shall be in accordance with appendix F, part VI, paragraph (b)(7).

(iii) *Calorimeter mounting.* The calorimeter shall be mounted in a 6- by 12- ±0.125 inch (152- by 305- ±3 mm) by 0.75 ±0.125 inch (19 mm ±3 mm) thick insulating block which is attached to a calibration rig for attachment to the test rig during calibration (figure 4). The insulating block shall be monitored for deterioration and replaced when necessary. The mounting shall be adjusted as necessary to ensure that the calorimeter face is parallel to the exit plane of the test burner cone.

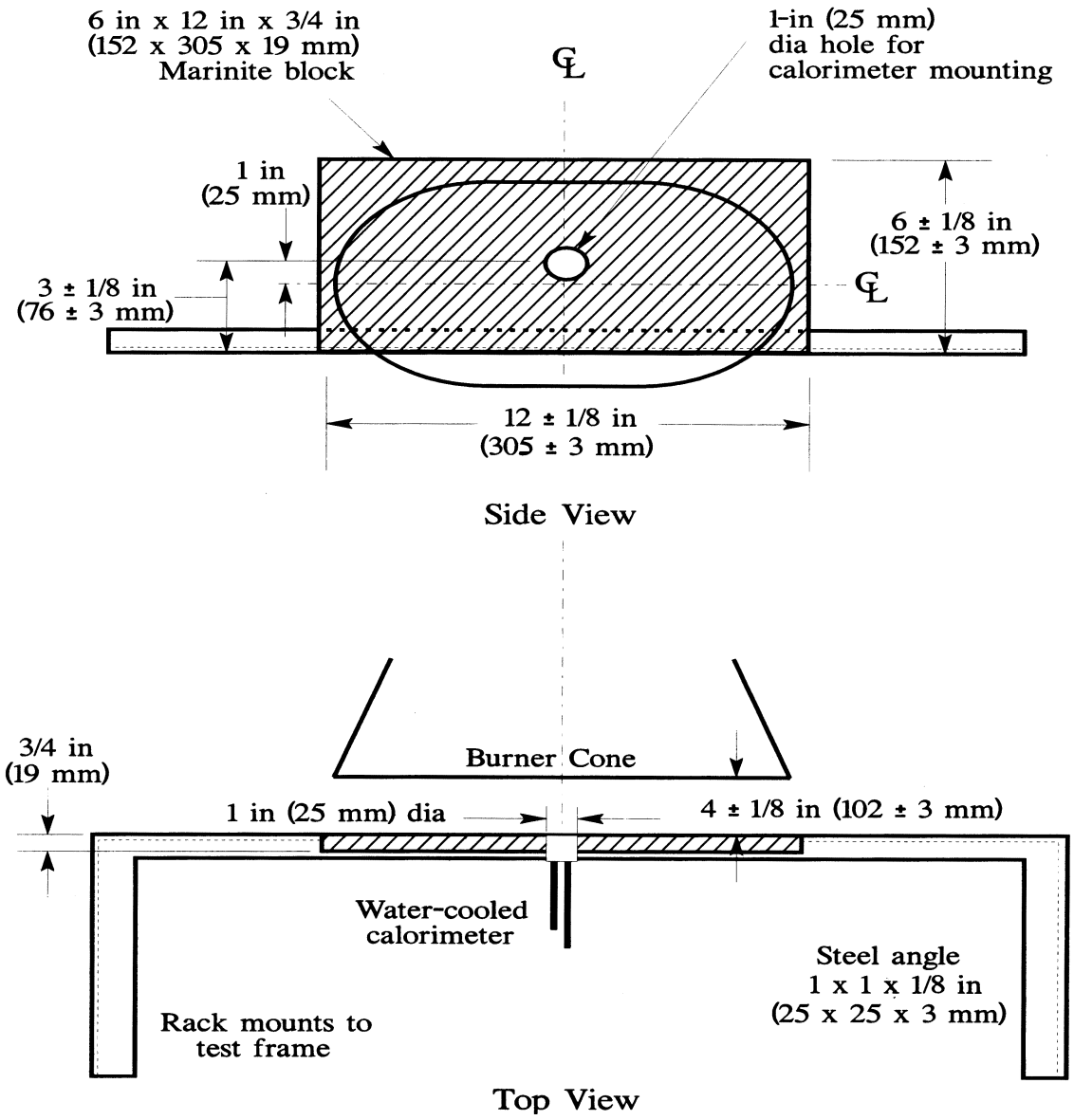

Figure 4--Calorimeter Position Relative to Burner Cone

(iv) *Thermocouples.* Seven ⅛-inch ceramic packed, metal sheathed, type K (Chromel-alumel), grounded junction thermocouples with a nominal 24 American Wire Gauge (AWG) size conductor shall be provided for calibration. The thermocouples shall be attached to a steel angle bracket to form a thermocouple rake for placement in the calibration rig during burner calibration (figure 5).

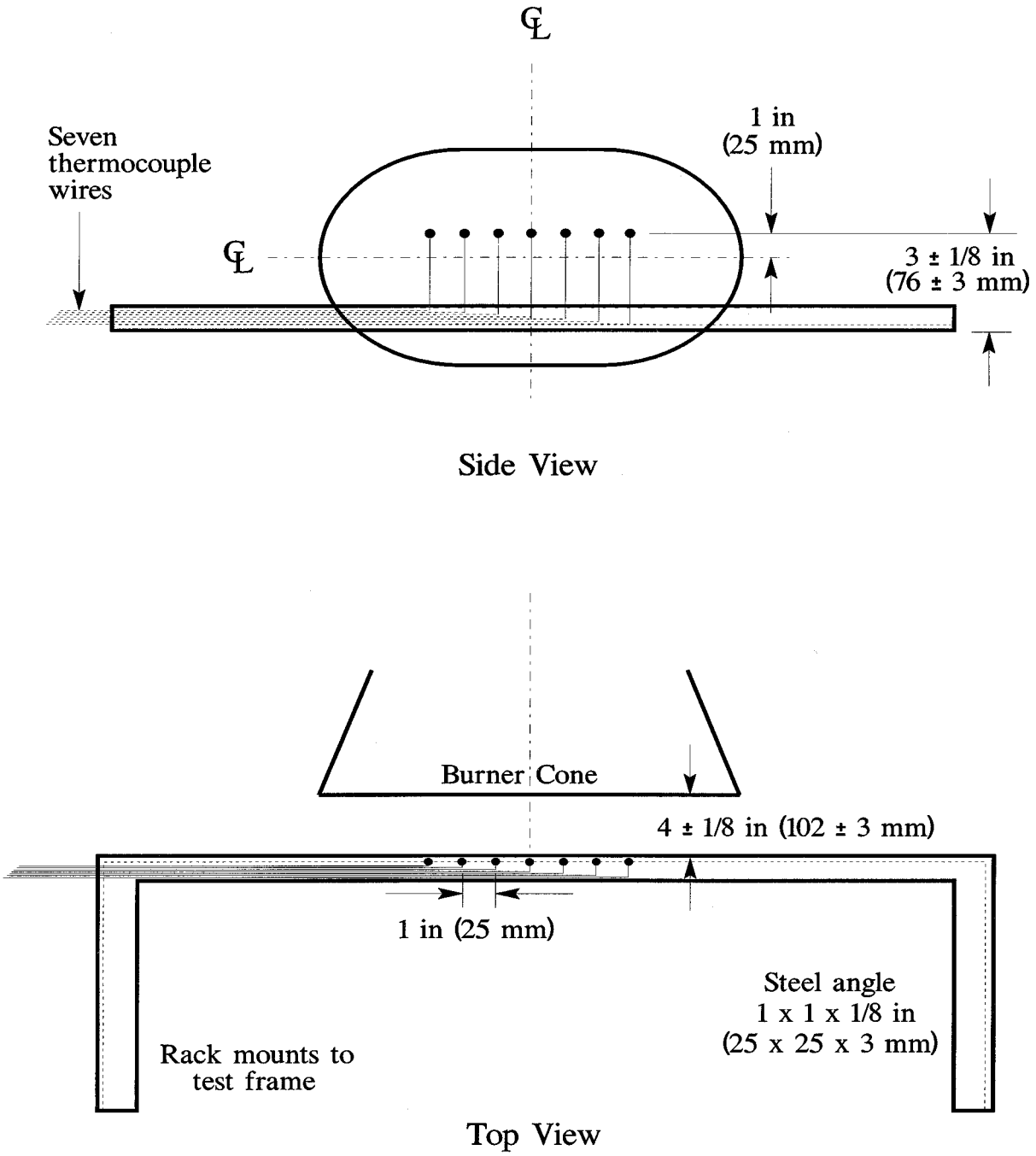

Figure 5. Thermocouple Rake Position Relative to Burner Cone

(v) *Air velocity meter.* A vane-type air velocity meter must be used to calibrate the velocity of air entering the burner. An Omega Engineering Model HH30A has been shown to be satisfactory. A suitable adapter used to attach the measuring device to the inlet side of the burner is required to prevent air from entering the burner other than through the device, which would produce erroneously low readings.

(4) *Test specimen mounting frame.* The mounting frame for the test specimens shall be fabricated of ⅛-inch thick steel as shown in figure 1, except for the center vertical former, which should be ¼-inch thick to minimize warpage. The specimen mounting frame stringers (horizontal) should be bolted to the test frame formers (vertical) such that the expansion of the stringers will not cause the entire structure to warp. The mounting frame shall be used for mounting the two insulation blanket test specimens as shown in figure 2.

(5) *Backface calorimeters.* Two total heat flux Gardon type calorimeters shall be mounted above the insulation test specimens on the back side (cold) area of the test specimen mounting frame as shown in figure 6. The calorimeters must be positioned along the same plane as the burner cone centerline, at a distance of 4 inches from the centerline of the test frame. The heat flux calibration shall be in accordance with appendix F, part VI, paragraph (b)(7).

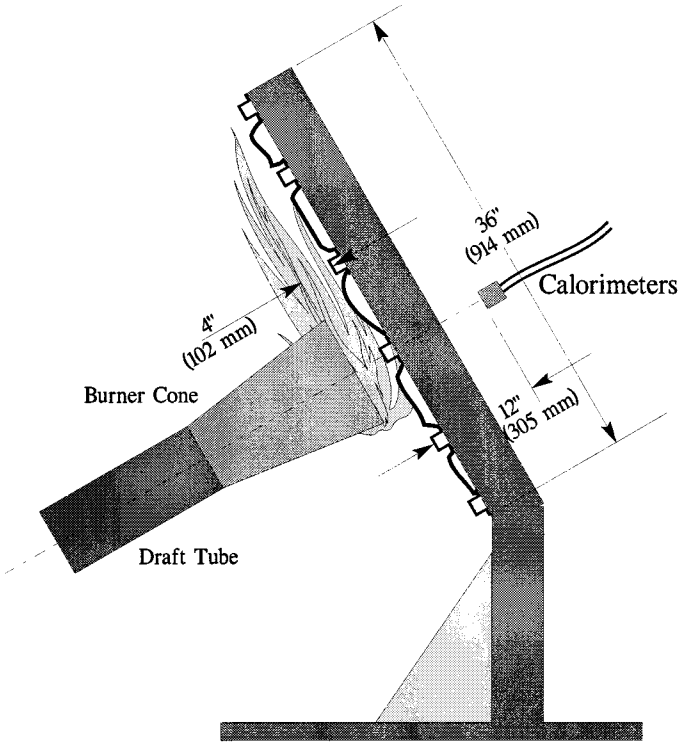

Fiigure 6--Position of Backface Calorimeters Relative to Test Specimen Frame

(6) *Instrumentation.* A recording potentiometer or other suitable calibrated instrument with an appropriate range shall be provided to measure and record the outputs of the calorimeter and the thermocouples.

(7) *Timing device.* A stopwatch or other device, accurate to +/-1%, shall be provided to measure the time of application of the burner flame and burnthrough time.

(8) *Test chamber.* Tests should be performed in a suitable chamber to reduce or eliminate the possibility of test fluctuation due to air movement. The chamber must have a minimum floor area of 10 by 10 feet.

(i) *Ventilation hood.* The test chamber must be provided with an exhausting system capable of removing the products of combustion expelled during tests.

(c) *Test specimens*—(1) *Specimen preparation.* A minimum of three specimen sets of the same construction and configuration shall be prepared for testing.

(2) *The insulation blanket test specimen.* (i) For batt-type materials such as fiberglass, the constructed, finished blanket specimen assemblies shall be 32 inches wide by 36 inches long, exclusive of heat sealed film edges.

(ii) For rigid and other non-conforming types of insulation materials, the finished test specimens shall fit into the test rig in such a manner as to replicate the actual in-service installation.

(3) *Construction.* Each of the specimens tested shall be fabricated using the principal components (i.e., insulation, fire barrier material if used, and moisture barrier film) and assembly processes (representative seams and closures).

(i) *Fire barrier material.* If the insulation blanket is constructed with a fire barrier material, the fire barrier material shall be placed in a manner reflective of the installed arrangement (e.g., if the material will be placed on the outboard side of the insulation material, inside the moisture film, it must be placed accordingly in the test specimen).

(ii) *Insulation material.* Blankets that utilize more than one variety of insulation (composition, density, etc.) shall have specimen sets constructed that reflect the insulation combination used. If, however, several blanket types use similar insulation combinations, it is not necessary to test each combination if it is possible to bracket the various combinations.

(iii) *Moisture barrier film.* If a production blanket construction utilizes more than one type of moisture barrier film, separate tests must be performed on each combination. For example, if a polyimide film is used in conjunction with an insulation in order to enhance the burnthrough capabilities, the same insulation with a polyvinyl fluoride must also be tested.

(iv) *Installation on test frame.* The blanket test specimens must be attached to the test frame using 12 steel spring type clamps as shown in figure 7. The clamps must be used to hold the blankets in place in both of the outer vertical formers, as well as the center vertical former (4 clamps per former). Place the top and bottom clamps 6 inches from the top and bottom of the test frame, respectively. Place the middle clamps 8 inches from the top and bottom clamps.

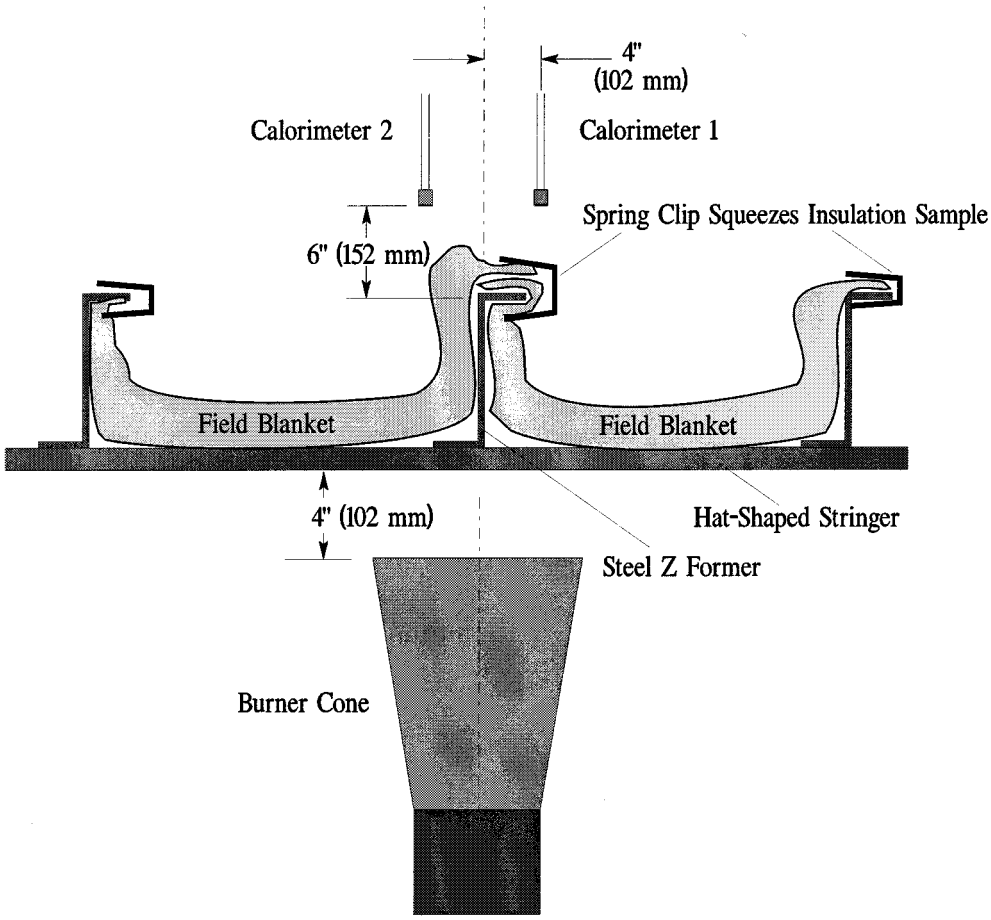

Figure 7--Test Specimen Installation On Test Frame

Note: For blanket materials that cannot be installed in accordance with figure 7 above, the blankets must be installed in a manner approved by the FAA.

(v) *Conditioning.* The specimens shall be conditioned at 70° ±5°F (21° ±2°C) and 55% +/-10% relative humidity for a minimum of 24 hours prior to testing.

(d) *Preparation of apparatus.* (1) Level and center the frame assembly to ensure alignment of the calorimeter and/or thermocouple rake with the burner cone.

(2) Turn on the ventilation hood for the test chamber. Do not turn on the burner blower. Measure the airflow of the test chamber using a vane anemometer or equivalent measuring device. The vertical air velocity just behind the top of the upper insulation blanket test specimen shall be 100 ±50 ft/min. The horizontal air velocity at this point shall be less than 50 ft/min.

(3) If a calibrated flow meter is not available, measure the fuel flow rate using a graduated cylinder of appropriate size. Turn on the burner motor/fuel pump, after insuring that the igniter system is turned off. Collect the fuel via a plastic or rubber tube into the graduated cylinder for a 2-minute period. Determine the flow rate in gallons per hour. The fuel flow rate shall be 6.0 ±0.2 gallons per hour.

(e) *Calibration.* (1) Secure the calibration rig to the test specimen frame. Position the burner so that it is centered in front of the calibration rig, and the vertical plane of the burner cone exit is at a distance of 4 ±0.125 inches (102 ±3 mm) from the calorimeter face. Ensure that the horizontal centerline of the burner cone is offset 1 inch below the horizontal centerline of the calorimeter (figure 8). Without disturbing the burner position, slide the thermocouple rake portion of the calibration rig in front of the burner, such that the middle thermocouple (number 4 of 7) is centered on the burner cone. Ensure that the horizontal centerline of the burner cone is also offset 1 inch below the horizontal centerline of the thermocouple tips.[3] If individual calibration rigs are used, swing the burner to each position to ensure proper alignment between the cone and the calorimeter and thermocouple rake.

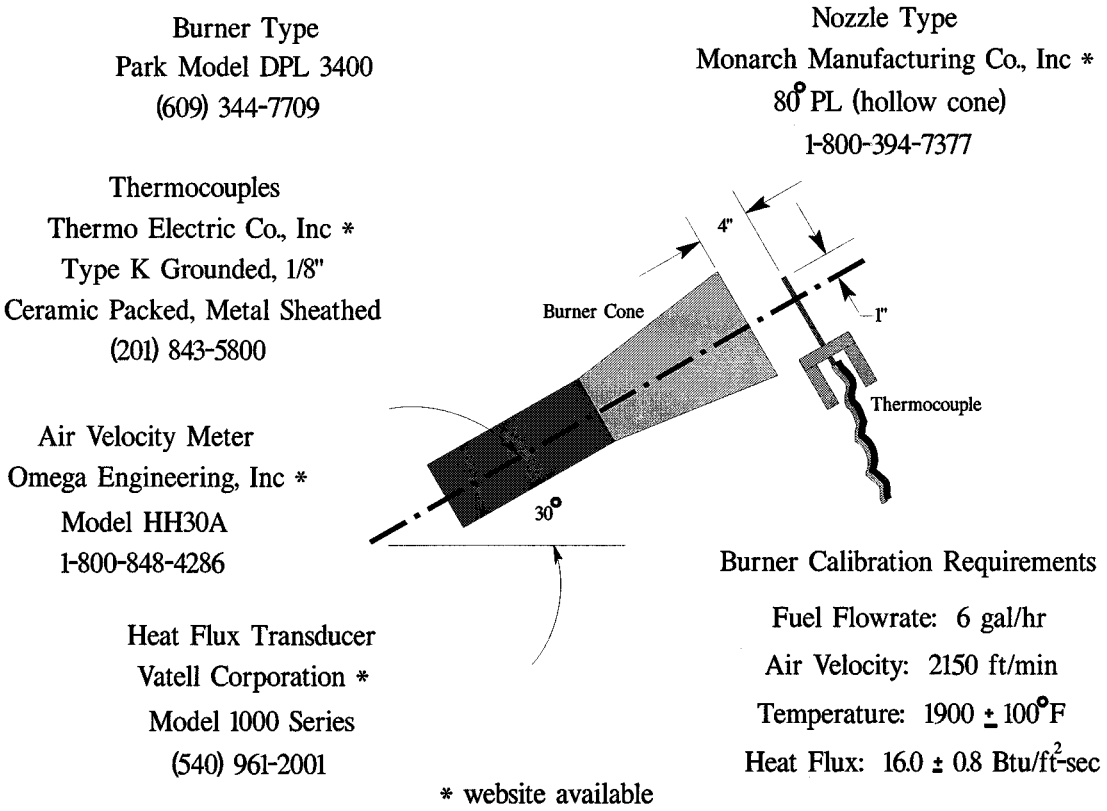

Figure 8--Burner Information and Calibration Settings

[3] The calibration rig must incorporate ''detents'' that ensure proper centering of both the calorimeter and the thermocouple rake with respect to the burner cone, so that rapid positioning of these devices can be achieved during the calibration procedure.

(2) Position the air velocity meter in the adapter, making certain that no gaps exist where air could leak around the air velocity measuring device. Turn on the blower/motor while ensuring that the fuel solenoid and igniters are off. Adjust the air intake velocity to a level of 2150 ft/min, then turn off blower/motor.

(3) Rotate the burner from the test position to the warm-up position. Prior to lighting the burner, ensure that the calorimeter face is clean of soot deposits, and there is water running through the calorimeter. Examine and clean the burner cone of any evidence of buildup of products of combustion, soot, etc. Soot buildup inside the burner cone may affect the flame characteristics and cause calibration difficulties. Since the burner cone may distort with time, dimensions should be checked periodically.

(4) While the burner is still rotated out of the test position, turn on the blower/motor, igniters, and fuel flow, and light the burner. Allow it to warm up for a period of 2 minutes. Move the burner into the test position and allow 1 minute for calorimeter stabilization, then record the heat flux once every second for a period of 30 seconds. Turn off burner, rotate out of position, and allow to cool. Calculate the average heat flux over this 30-second duration. The average heat flux should be 16.0 +/−0.8 Btu/ft^2 sec.

(5) Position the thermocouple rake in front of the burner. After checking for proper alignment, rotate the burner to the warm-up position, turn on the blower/motor, igniters and fuel flow, and light the burner. Allow it to warm up for a period of 2 minutes. Move the burner into the test position and allow 1 minute for thermocouple stabilization, then record the temperature of each of the 7 thermocouples once every second for a period of 30 seconds. Turn off burner, rotate out of position, and allow to cool. Calculate the average temperature of each thermocouple over this 30-second period and record. The average temperature of each of the 7 thermocouples should be 1900°F +/−100°F.

(6) If either the heat flux or the temperatures are not within the specified range, adjust the burner intake air velocity and repeat the procedures of paragraphs (4) and (5) above to obtain the proper values. Ensure that the inlet air velocity is within the range of 2150 ft/min +/−50 ft/min.

(7) Calibrate prior to each test until consistency has been demonstrated. After consistency has been confirmed, several tests may be conducted with calibration conducted before and after a series of tests.

(f) *Test procedure.* (1) Secure the two insulation blanket test specimens to the test frame. The insulation blankets should be attached to the test rig center vertical former using four spring clamps positioned as shown in figure 7 (according to the criteria of paragraph (c)(4) or (c)(4)(i) of this part of this appendix).

(2) Ensure that the vertical plane of the burner cone is at a distance of 4 +/−0.125 inch from the outer surface of the horizontal stringers of the test specimen frame, and that the burner and test frame are both situated at a 30° angle with respect to vertical.

(3) When ready to begin the test, direct the burner away from the test position to the warm-up position so that the flame will not impinge on the specimens. Turn on and light the burner and allow it to stabilize for 2 minutes.

(4) To begin the test, rotate the burner into the test position and simultaneously start the timing device.

(5) Expose the test specimens to the burner flame for 4 minutes and then turn off the burner. Immediately rotate the burner out of the test position.

(6) Determine (where applicable) the burnthrough time, or the point at which the heat flux exceeds 2.0 Btu/ft^2-sec.

(g) *Report.* (1) Identify and describe the specimen being tested.

(2) Report the number of insulation blanket specimens tested.

(3) Report the burnthrough time (if any), and the maximum heat flux/temperature on the back face of the insulation blanket test specimen, and the time at which the maximum occurred.

(h) *Requirements.* (1) Neither of the two insulation blanket test specimens shall allow fire/flame penetration in less than 240 seconds

(2) Neither of the two insulation blanket test specimens shall allow more than 2.0 Btu/ft^2-sec on the cold side of the insulation specimens at a point 12 inches from the face of the test rig.

PART 91—GENERAL OPERATING AND FLIGHT RULES

6–8. The authority citation for part 91 continues to read as follows:

Authority: 49 U.S.C. 106(g), 40103, 40113, 40120, 44101, 44111, 44701, 44709, 44711, 44712, 44715, 44716, 44717, 44722, 46306, 46315, 46316, 46502, 46504, 46506–46507, 47122, 47508, 47528–47531.

9. Amend § 91.613 by redesignating the existing text as paragraph (a), and adding paragraph (b) to read as follows:

§ 91.613 Materials for compartment interiors.

* * * * *

(b) *Thermal/acoustic insulation materials.* For transport category airplanes type certificated after January 1, 1958:

(1) For airplanes manufactured before [2 years after the effective date of the final rule], when thermal/acoustic insulation materials are installed as replacements after [2 years after the effective date of the final rule], those materials must meet the flame propagation requirements of § 25.856 of this chapter, effective [insert final rule effective date].

(2) For airplanes manufactured after [2 years after the effective date of the final rule], thermal/acoustic insulation materials must meet the flame propagation requirements of § 25.856 of this chapter, effective [insert final rule effective date].

PART 121—OPERATING REQUIREMENTS: DOMESTIC, FLAG, AND SUPPLEMENTAL OPERATIONS

10. The authority citation for part 121 continues to read as follows:

Authority: 49 U.S.C. 106(g), 40113, 40119, 44101, 44701–44702, 44705, 44709–44711, 44713, 44716–44717, 44722, 44901, 44903–44904, 44912, 46105.

11. Amend § 121.312 by adding paragraph (e) to read as follows:

§ 121.312 Materials for compartment interiors.

* * * * *

(e) *Thermal/acoustic insulation materials.* For transport category airplanes type certificated after January 1, 1958:

(1) For airplanes manufactured before [2 years after the effective date of the final rule], when thermal/acoustic insulation materials are installed as replacements after [2 years after the effective date of the final rule], those materials must meet the flame propagation requirements of § 25.856 of this chapter, effective [insert final rule effective date].

(2) For airplanes manufactured after [2 years after the effective date of the final rule], thermal/acoustic insulation materials must meet the flame propagation requirements of § 25.856 of this chapter, effective [insert final rule effective date].

(3) For airplanes manufactured after [4 years after the effective date of the final rule], thermal/acoustic insulation materials must meet the flame penetration resistance requirements of § 25.856 of this chapter, effective [insert final rule effective date].

PART 125—CERTIFICATION AND OPERATIONS: AIRPLANES HAVING A SEATING CAPACITY OF 20 OR MORE PASSENGERS OR A MAXIMUM PAYLOAD CAPACITY OF 6,000 POUNDS OR MORE

12. The authority citation for part 125 continues to read as follows:

Authority: : 49 U.S.C. 106(g), 40113, 44701–44702, 44705, 44710–44711, 44713, 44716–44717, 44722.

13. Amend § 125.113 by adding paragraph (c) to read as follows:

§ 125.113 Cabin interiors.

* * * * *

(c) *Thermal/acoustic insulation materials.* For transport category airplanes type certificated after January 1, 1958:

(1) For airplanes manufactured before [2 years after the effective date of the final rule], when thermal/acoustic

insulation materials are installed as replacements after [2 years after the effective date of the final rule], those materials must meet the flame propagation requirements of § 25.856 of this chapter, effective [insert final rule effective date].

(2) For airplanes manufactured after [2 years after the effective date of the final rule], thermal/acoustic insulation materials must meet the flame propagation requirements of § 25.856 of this chapter, effective [insert final rule effective date].

PART 135—OPERATING REQUIREMENTS: COMMUTER AND ON-DEMAND OPERATIONS AND RULES GOVERNING PERSONS ON BOARD SUCH AIRCRAFT

14. The authority citation for part 135 continues to read as follows:

Authority: 49 U.S.C. 106(g), 40113, 44701–44702, 44705, 44709, 44711–44713, 44715–44717, 44722.

15. Amend § 135.170 by adding paragraph (c) to read as follows:

§ 135.170 Materials for compartment interiors.

* * * * *

(c) *Thermal/acoustic insulation materials.* For transport category airplanes type certificated after January 1, 1958:

(1) For airplanes manufactured before [2 years after the effective date of the final rule], when thermal/acoustic insulation materials are installed as replacements after [2 years after the effective date of the final rule], those materials must meet the flame propagation requirements of § 25.856 of this chapter, effective [insert final rule effective date].

(2) For airplanes manufactured after [2 years after the effective date of the final rule], thermal/acoustic insulation materials must meet the flame propagation requirements of § 25.856 of this chapter, effective [insert final rule effective date].

Issued in Washington, DC, on September 8, 2000.

Elizabeth Erickson,

Director, Aircraft Certification Service.

[FR Doc. 00–23550 Filed 9–19–00; 8:45 am]

BILLING CODE 4910–13–U

Federal Register

Wednesday,
September 20, 2000

Part III

Department of Commerce

Patent and Trademark Office

37 CFR Parts 1 and 5

Changes To Implement Eighteen-Month Publication of Patent Applications; Final Rule

DEPARTMENT OF COMMERCE

Patent and Trademark Office

37 CFR Parts 1 and 5

RIN 0651–AB05

Changes to Implement Eighteen-Month Publication of Patent Applications

AGENCY: United States Patent and Trademark Office, Commerce.

ACTION: Final rule.

SUMMARY: The United States Patent and Trademark Office (Office) is revising the rules of practice in patent cases to implement certain provisions of the American Inventors Protection Act of 1999. These provisions of the American Inventors Protection Act of 1999 provide, with certain exceptions, for the publication of pending patent applications (other than design applications) at eighteen months from the earliest claimed priority date.

DATES: *Effective Date:* November 29, 2000.

Applicability Date: Sections 1.103(d), 1.211, 1.213, 1.215, 1.217, 1.219, and 1.221, and the changes to §§ 1.14, 1.55, 1.72, 1.78, 1.85, 1.99, 1.137, 1.138, and 1.311, apply to any patent application filed on or after November 29, 2000, and to any patent application in which applicant requests voluntary publication.

FOR FURTHER INFORMATION CONTACT: *Concerning this final rule:* Robert W. Bahr, Karin L. Tyson, or Robert A. Clarke by telephone at (703) 308–6906, or by mail addressed to: Box Comments—Patents, Assistant Commissioner for Patents, Washington, D.C. 20231, or by facsimile to (703) 872–9411, marked to the attention of Robert W. Bahr.

Concerning the electronic filing system (EFS): Jay Lucas or Michael Lewis by electronic mail message via the Internet addressed to jay.lucas@uspto.gov.

SUPPLEMENTARY INFORMATION: The American Inventors Protection Act of 1999 (Title IV of the Intellectual Property and Communications Omnibus Reform Act of 1999 (S. 1948) as introduced in the 106th Congress on November 17, 1999) was incorporated and enacted into law on November 29, 1999, by section 1000(a)(9), Division B, of Public Law 106–113, 113 Stat. 1501 (1999). The American Inventors Protection Act of 1999 contains a number of changes to title 35, United States Code. This notice revises the rules of practice to implement the provisions of sections 4501 through 4508 (Subtitle E, Domestic Publication of Patent Applications Published Abroad) of the American Inventors Protection Act of 1999. These provisions of the American Inventors Protection Act of 1999 provide that, with certain exceptions, applications for patent shall be published promptly after the expiration of a period of eighteen months from the earliest filing date for which a benefit is sought under title 35, United States Code (''eighteen-month publication'').

Section 4502 of the American Inventors Protection Act of 1999 amends 35 U.S.C. 122 (35 U.S.C. 122(b)) to provide that applications for patent shall be published promptly after the expiration of a period of eighteen months from the earliest filing date for which a benefit is sought under title 35, United States Code, and that an application may be published earlier than the end of such eighteen-month period at the request of the applicant. Section 4502 of the American Inventors Protection Act of 1999 (35 U.S.C. 122(b)) also contains a number of exceptions to eighteen-month publication of patent applications.

First: An application shall not be published if it is: (1) No longer pending; (2) subject to a secrecy order under 35 U.S.C. 181 or an application for which publication or disclosure would be detrimental to national security; (3) a provisional application under 35 U.S.C. 111(b); or (4) an application for a design patent under 35 U.S.C. chapter 16. *See* 35 U.S.C. 122(b)(2)(A) and (d).

Second: An application shall not be published if an applicant makes a request upon filing, certifying that the invention disclosed in the application has not and will not be the subject of an application filed in another country, or under a multilateral international agreement, that requires eighteen-month publication. An applicant may rescind such a request at any time. In addition, an applicant who has made such a request but who subsequently files an application directed to the invention disclosed in the application filed in the Office in a foreign country, or under a multilateral international agreement, that requires eighteen-month publication, must notify the Office of such filing within forty-five days after the date of the filing of such foreign or international application. An applicant's failure to timely provide such a notice to the Office will result in abandonment of the application (subject to revival if it is shown that the delay in submitting the notice was unintentional). If an applicant rescinds such a request or notifies the Office that an application was filed in a foreign country, or under a multilateral international agreement, that requires eighteen-month publication, the application is subject to eighteen-month publication. *See* 35 U.S.C. 122(b)(2)(B)(i)–(iv).

Third: If an applicant has filed applications in one or more foreign countries, directly or through a multilateral international agreement, and such foreign-filed applications or the description of the invention in such foreign-filed applications is less extensive than the application or description of the invention in the application filed in the Office, the applicant may submit a redacted copy of the application filed in the Office eliminating any part or description of the invention in such application that is not also contained in any of the corresponding applications filed in a foreign country. If the redacted copy of the application is received within sixteen months after the earliest filing date for which a benefit is sought under title 35, United States Code, the Office may publish only the redacted copy of the application. *See* 35 U.S.C. 122(b)(2)(B)(v).

Section 4503(a) of the American Inventors Protection Act of 1999 amends 35 U.S.C. 119(b) to provide that no application for patent shall be entitled to a right of priority under 35 U.S.C. 119(a)–(d) unless a claim is filed in the Office, identifying the foreign application by specifying the application number of that foreign application, the intellectual property authority or country in or for which the application was filed, and the date of filing the application, at such time during the pendency of the application as required by the Office. Section 4503(a) of the American Inventors Protection Act of 1999 also amends 35 U.S.C. 119(b) to provide that the Office may consider the failure of the applicant to timely file a claim for priority as a waiver of any such claim, and may establish procedures, including the payment of a surcharge, to accept an unintentionally delayed claim under 35 U.S.C. 119(b)–(d). Section 4503(a) of the American Inventors Protection Act of 1999 also amends 35 U.S.C. 119(b) to authorize the Office to determine whether to require a certified copy of the original foreign application.

Section 4503(b)(1) of the American Inventors Protection Act of 1999 amends 35 U.S.C. 120 to provide that no application shall be entitled to the benefit of an earlier filed application under 35 U.S.C. 120 unless an amendment containing the specific reference to the earlier filed application is submitted at such time during the

pendency of the application as required by the Office. Section 4503(b)(1) of the American Inventors Protection Act of 1999 also amends 35 U.S.C. 120 to provide that the Office may consider the failure to submit such an amendment within that time period as a waiver of any benefit under 35 U.S.C. 120, and may establish procedures, including the payment of a surcharge, to accept an unintentionally delayed submission of an amendment under 35 U.S.C. 120.

Section 4503(b)(2) of the American Inventors Protection Act of 1999 amends 35 U.S.C. 119(e) to provide that no application shall be entitled to the benefit of an earlier filed provisional application under 35 U.S.C. 119(e) unless an amendment containing the specific reference to the earlier filed provisional application is submitted at such time during the pendency of the application as required by the Office. Section 4503(b)(2) of the American Inventors Protection Act of 1999 also amends 35 U.S.C. 119(e) to provide that the Office may consider the failure to submit such an amendment within that time period as a waiver of any benefit under 35 U.S.C. 119(e), and the Office may establish procedures, including the payment of a surcharge, to accept an unintentionally delayed submission of an amendment under 35 U.S.C. 119(e) during the pendency of the application.

Case law has indicated that, in certain instances, priority claims may be perfected after issuance. The U.S. Court of Appeals for the District of Columbia has held that the equitable or remedial provisions of 35 U.S.C. 251 authorize patentees to correct or perfect a claim for priority under 35 U.S.C. 119 in an issued patent by reissue. *See Brenner* v. *State of Israel*, 400 F.2d 789, 158 USPQ 584 (D.C. Cir. 1968). The U.S. District Court for the District of Columbia applied this rationale to permit a patentee to amend an intermediate abandoned application in a chain of applications for which a benefit was claimed under 35 U.S.C. 120 to include the specific reference required by 35 U.S.C. 120. *See Sampson* v. *Commissioner*, 195 USPQ 136 (D.D.C. 1976). In appropriate circumstances, the Office has permitted patentees to perfect claims under 35 U.S.C. 119, 120, or 121 in an issued patent by certificate of correction under 35 U.S.C. 255 and § 1.323. *See In re Schuurs*, 218 USPQ 443 (Comm'r Pat. 1983); *In re Lambrech*, 202 USPQ 620 (Comm'r Pat. 1976); *In re Van Esdonk*, 187 USPQ 671 (Comm'r Pat. 1975).

The amendments to 35 U.S.C. 119 and 120 provide that the Office may consider the failure of the applicant to file a timely claim under 35 U.S.C. 119 or 120 as a waiver of any such claim. Sections 1.55 and 1.78 implement these amendments to 35 U.S.C. 119 and 120 by specifying time periods during the pendency of the application within which claims under 35 U.S.C. 119(a)–(d), 119(e), and 120 must be stated or are considered waived. 35 U.S.C. 119(b), 119(e), and 120 each provide that the Office may establish procedures to accept an unintentionally delayed submission of a claim under 35 U.S.C. 119(b), 119(e), or 120 (respectively); however, 35 U.S.C. 119(e) requires that such unintentionally delayed claim (amendment) be submitted during the pendency of the application. Thus, a claim under 35 U.S.C. 119(a)–(d) or 120 for the benefit of a prior application may be added (or corrected) in an issued patent by reissue or certificate of correction (assuming the conditions for reissue or certificate of correction are otherwise met) by submitting such untimely claim under the procedures established in § 1.55 or § 1.78 (including payment of any applicable surcharge). A claim under 35 U.S.C. 119(e) for the benefit of a prior provisional application, however, must be added or corrected during the pendency of the application.

Section 4504 of the American Inventors Protection Act of 1999 amends 35 U.S.C. 154 to provide that, subject to a number of conditions, a patent includes the right to obtain a reasonable royalty during the period beginning on the date of publication of the application for such patent under 35 U.S.C. 122(b) (or the date of publication under Patent Cooperation Treaty (PCT) Article 21(2) of an international application designating the United States) and ending on the date the patent is issued (''provisional rights'').

Section 4505 of the American Inventors Protection Act of 1999 amends 35 U.S.C. 102(e) to, *inter alia*, set forth the conditions under which an application published under 35 U.S.C. 122(b) or under PCT Article 21(2) is prior art as of its filing date.

Section 4506 of the American Inventors Protection Act of 1999 provides that the Office shall recover the cost of early publication required by 35 U.S.C. 122(b) by charging a separate publication fee after a notice of allowance is given under 35 U.S.C. 151.

Section 4508 of the American Inventors Protection Act of 1999 provides that its eighteen-month publication provisions take effect on November 29, 2000, and apply to applications (other than for a design patent) filed under 35 U.S.C. 111(a) on or after November 29, 2000, and to applications in compliance with 35 U.S.C. 371 that resulted from international applications filed under 35 U.S.C. 363 on or after November 29, 2000.

The Office published a notice proposing changes to the rules of practice to implement the provisions of §§ 4501 through 4508 (Subtitle E, Domestic Publication of Patent Applications Published Abroad) of the American Inventors Protection Act of 1999. *See* Changes to Implement Eighteen-Month Publication of Patent Applications, Notice of Proposed Rulemaking, 65 FR 17946 (Apr. 5, 2000), 1233 Off. Gaz. Pat. Office 121 (Apr. 25, 2000) (notice of proposed rulemaking). This final rule adopts changes to the rules of practice to implement the provisions of §§ 4501 through 4508 of the American Inventors Protection Act of 1999.

The Office's planning approach to eighteen-month publication includes: (1) Disseminating a publication document (patent application publication) for each published application; and (2) providing (under conditions set forth below) any member of the public with access to the file wrapper and contents of each published application (which may be limited to a copy of the file wrapper and contents of the application).

Patent application publication: The patent application publication will include a front page containing information similar to that contained on the front page of a patent, and the drawings (if any) and specification (including claims) of the published application. To create the patent application publication, the Office plans to use its Patent Application Capture and Review (PACR) system to create an electronic database (PACR database) containing: (1) The application papers and drawings deposited on the filing date of the application; and (2) any subsequently filed application papers and drawings needed to create the patent application publication. The application information contained in the Office's PACR database will be used to create the patent application publication, unless the applicant provides a copy of the application via the Office's electronic filing system (EFS) to be used to create the patent application publication (discussed below).

The Office currently uses the PACR database as the Office's record of the application papers submitted on the filing date of the application (i.e., the original disclosure of the invention). The application papers submitted on the filing date of the application, however, may not include the content needed

(e.g., an abstract), and the application papers or drawings may not be of sufficient quality (e.g., papers not having sufficient contrast to permit electronic capture by digital imaging and conversion to text by optical character recognition or drawings not having sufficient quality) to be used to create a patent application publication. Since the patent application publication will be a prior art document (and, in most cases, the prior art document having the earliest effective date under 35 U.S.C. 102(a), (b), and (e)), the Office must consider the usability of the patent application publication as a prior art document when determining what drawing quality is needed to create the patent application publication.

If the application papers submitted on the filing date of the application do not include the content needed, or the application papers or drawings are not of sufficient quality to be used, to create a patent application publication, the Office of Initial Patent Examination (OIPE) will issue a notice requiring that the applicant submit the needed application content, or application papers or drawings of sufficient quality, for use in creating a patent application publication. The applicant's reply to that notice (application papers and drawings needed to create the patent application publication) will then be added to the PACR database. The Office must separate the application papers and drawings deposited on the filing date of the application and the subsequently filed application papers and drawings in its PACR database because the PACR database is also used to create any requested certified copy of the application (which may only include the application papers and drawings deposited on the filing date of the application).

Initially, an application filed under 35 U.S.C. 111(a) (nonprovisional) must be entitled to a filing date (i.e., contains a written description of the invention, a drawing (if necessary for an understanding of the invention), and at least one claim) for the application to be in condition for publication. In addition, if an application filed under 35 U.S.C. 111(a) otherwise entitled to a filing date appears to omit a portion of the description or a drawing figure, the omitted portion of the description or drawing figure(s) must be supplied, or the period for supplying such portion of the description or drawing figure(s) must have expired, for the application to be in condition for publication. The requirements for an application filed under 35 U.S.C. 111(a) to be entitled to a filing date and the treatment of an application filed under 35 U.S.C. 111(a) that appears to omit a portion of the description or a drawing figure is set forth in sections 601.01(d) through 601.01(g) of the Manual of Patent Examining Procedure (7th ed. 1998) (Rev. 1, Feb. 2000) (*MPEP*).

In addition, an application filed under 35 U.S.C. 111(a) must include an executed oath or declaration (§ 1.63), an abstract (§ 1.72(b)), and an English translation (if filed in a language other than English), for the application to have the content necessary to create the patent application publication. For eighteen-month publication purposes, the oath or declaration must at a minimum: (1) Name each inventor at least by a family and given name; and (2) be signed by each inventor or a party qualified to sign under §§ 1.42, 1.43, or 1.47 in compliance with § 1.64. Finally, an application filed under 35 U.S.C. 111(a) will not be published until the basic filing fee (§ 1.16(a) or (g)) is paid.

A PCT international application must satisfy the requirements of 35 U.S.C. 371 to be subject to eighteen-month publication under 35 U.S.C. 122(b) (and to have the content necessary to create the patent application publication).

Even if an application has the content necessary to create the patent application publication, the application papers and drawings must also be reviewed to determine whether they are of sufficient quality to be used in creating the patent application publication. To be of sufficient quality to create the patent application publication, the specification must be on sheets of paper that: (1) Are flexible, strong, smooth, non-shiny, durable, and white; (2) are either A4 (21 cm × 29.7 cm) or 8½″ × 11″ with each sheet having a left margin of at least 2.5 cm (1″) and top, bottom, and right margins of at least 2.0 cm (¾″); (3) are written on one side only in portrait orientation; (4) are plainly and legibly written either by a typewriter or machine printer in permanent dark ink or its equivalent; (5) have lines that are either 1½ or double-spaced; and (6) have sufficient clarity and contrast between the paper and the writing on the paper to permit direct reproduction and electronic capture by digital imaging and optical character recognition. These quality standards and requirements are currently set forth in § 1.52(a) and (b). In addition, the title must meet the length requirement of § 1.72(a); the abstract must commence on a separate sheet and meet the word-length requirement of § 1.72(b); the claims must commence on a separate sheet; and the sequence listing (if applicable) must comply with §§ 1.821 through 1.825.

As discussed above, the Office must consider not only whether drawings are of sufficient quality to create a publication (the patent application publication), but whether they are sufficient for the publication to be routinely used as a prior art document. Thus, the drawing sheets (if drawings are included) must comply with the following requirements of § 1.84. Drawings must be done in dark ink (not pencil), except where color drawings or photographs are permitted. Photographs (or photomicrographs) are not permitted unless they are reproducible and the invention cannot be clearly illustrated in an ink drawing. *See* Interim Waiver of 37 CFR § 1.84(b)(1) for Petitions to Accept Black and White Photographs and Advance Notice of Change to M.P.E.P. § 608.02, Notice, 1213 Off. Gaz. Pat. Office 108 (Aug. 4, 1998). Drawing sheets must be reasonably free from erasures and must be free from alterations, overwritings, interlineations, folds, and copy marks. Drawing sheets must be either 21.0 cm by 29.7 cm (DIN size A4) or 21.6 cm by 27.9 cm (8 ½ by 11 inches). Each drawing sheet must include a top margin of at least 2.5 cm (1 inch), a left side margin of at least 2.5 cm (1 inch), a right side margin of at least 1.5 cm (⅝ inch), and a bottom margin of at least 1.0 cm (⅜ inch). Lines, numbers, and letters must be clean, dark (not of poor line quality), uniformly thick, and well defined. The English alphabet must be used for letters, except where another alphabet is customarily used (such as the Greek alphabet to indicate angles, wavelengths, and mathematical formulas). Numbers, letters, and reference characters must measure at least 0.32 cm (⅛ inch) in height. Lead lines are required for each reference character (except for those which indicate the surface or cross section on which they are placed, in which case the reference character must be underlined to make it clear that a lead line has not been left out by mistake). The drawing views must also be numbered in consecutive Arabic numerals, starting with 1.

Finally, the specification (including the claims) must not contain drawings or flow diagrams. *See* § 1.58(a).

In September of 1996, the Office revised the standard and format requirements for the specification (including the abstract and claims), drawings, and other application papers set forth in § 1.52 and § 1.84 for the purpose of obtaining initial application papers in condition for eighteen-month publication. *See* Miscellaneous Changes in Patent Practice, Final Rule Notice, 61 FR 42790 (Aug. 19, 1996), 1190 Off. Gaz.

Pat. Office 67 (Sept. 17, 1996). Applicants are advised that the Office will: (1) Begin enforcement of the provisions of § 1.52(a) and (b) and § 1.84 during the pre-examination processing of patent applications; and (2) not permit applicants to request that objections under § 1.52(a) and (b) and § 1.84 made during the pre-examination processing of a patent application be held in abeyance pending allowance of the application.

As discussed below, if applicant timely provides the Office with a copy of the application via the Office electronic filing system, the Office will use the electronic copy provided by the applicant (rather than the PACR database records) to create the patent application publication. Applicants may use this procedure to obtain inclusion of amendments submitted during prosecution in the patent application publication. Applicants must use this procedure when requesting: (1) Voluntary publication of an application; (2) republication of a previously published application; or (3) publication of only a redacted copy of an application.

Electronic filing system: The electronic filing system (EFS) is an electronic system for the submission of patent applications to the Office. The EFS encompasses the preparation of the application parts in a special manner on the applicant's computer (authoring), the assembling of the pieces of the application so authored, and the secure communication of that application to the Office. The same EFS software must be used by applicants who wish to submit a copy of the application for the patent application publication.

The steps for submission of an electronic version of a patent application are as follows: (1) Obtaining a digital certificate; (2) obtaining the authoring and the submission-software packages from the Office; (3) authoring the patent application; and (4) assembling the parts of the application, and validating, digitally signing, and submitting the application.

To file a copy of an application using the EFS, an applicant (or representative) must submit a request and receive an Office digital certificate to enable secure communication between the applicant and the Office. A digital certificate will allow the authorized person to conduct electronic filing of one or more applications, as well as have access to the Office's Patent Application Information Retrieval (PAIR) software to display patent application status information.

The digital certificate is given to individuals and firms that obtain a customer number, and also request a digital certificate. Instructions on how to obtain the necessary digital certificate are located at the Office's Electronic Business Center on the Office's Internet Web site (http://www.uspto.gov) (under the section Electronic Business Center, select New User for the PAIR system).

The Office makes its branded version of the security software product called Entrust Direct software available to authorized persons. The software operates in conjunction with an Office Public Key Infrastructure (PKI) that is secure and enables communication only between the Office and authorized persons who are registered with the Office.

A person signing up for EFS application filing receives a package with his or her digital certificate including: (1) the software that will attach a digital signature to a document or set of documents; (2) an authoring tool that will allow the applicant to convert a standard patent application into a specialized format; and (3) the electronic Packaging and Validation Engine (ePave) program that will assemble the parts of the application, validate that the parts are complete, encrypt and digitally sign them, and then send them to the Office.

The applicant is responsible for correctly authoring the electronic application, which is defined as reformatting the application into a form that complies with the requirements of XML (the standard eXtensible Markup Language of Internet authoring). The XML requires that all the pieces of information in the application (*e.g.,* the inventor's name, title of the invention, and the claims) are tagged with standard XML named tags before and after each piece of information. For example, XML could require that the title be tagged:

<app title> MAKING A WIDGIT </app title>

The tagged information, in turn, is ordered and positioned on the submitted document according to the formula for that document in the document type definition (DTD). The DTD contains a list of all the tagged data elements (pieces of information) that should be on that document, and the relative positioning of the elements. When combined with the document's style sheet (which contains formatting information), the DTD will completely define what the document should contain and, when printed or viewed, what it will look like.

The applicant does the authoring using the software authoring tool given to him or her by the Office and operating on the applicant's computer. The authoring tool displays a template on applicant's computer screen listing all of the data elements that should be in a patent application (according to the Office's DTD). The applicant clicks in the desired data element and types information into the template. For example, the applicant clicks the data element ''TITLE'' and types ''MAKING A WIDGIT'' into the template. The authoring tool will add the tags, paragraph numbers, and other elements that are required by XML. The applicant can continue through this whole process adding the required information to each of the data elements in the template until the application is fully authored.

The applicant can also use the authoring tool to ''cut and paste'' a previously written application into the proper format. In this mode, the applicant will open up that written application, and also open up the authoring tool template to reveal the data elements. When the applicant clicks in the data element, the applicant will copy the relevant section from the previously written application and paste that section into the template (for tagging by the authoring tool).

Paper copies of the oath or declaration (§ 1.63), drawings, and certain other documents are scanned on the applicant's digital scanner and stored in tagged image file format (TIFF). The TIFF is not tagged by the authoring tool, but is similar to an electronic photograph.

Using either mode, the applicant will produce a copy of the application in compliance with the Office EFS, including a specification and claims (in XML), an oath or declaration (in TIFF), and drawings (also in TIFF).

Once the various parts of the application are prepared, the applicant will use the software tool ePave to assemble those parts and submit the application to the Office. The ePave software interacts with the applicant to fill out an electronic transmittal and fee information letter. This document is developed in the tagged XML format. The applicant then uses the ePave software to associate these documents with the previously produced application.

This association of the related files to be submitted is called bundling. The bundle of files that will be sent to the Office will be compressed using Zip technology to reduce their size. Then ePave will apply the digital signature to the compressed bundle, to indicate who is sending the package to the Office, and check the file's integrity. The digital signature process also encrypts the bundle, for safety during transmission.

The authoring tool and ePave software on the applicant's computer perform all of this activity almost invisibly. The applicant must enter a password to apply the digital signature, and the software will finish processing the application for submission to the Office. During the processing of a copy of an application for submission to the Office for use in a patent application publication, the applicant will be advised that the application of a digital signature constitutes a statement that the EFS copy of the application contains no new matter, and, except for a redacted copy of an application (which requires the concurrent submission of other certifications on paper), that the EFS copy of the application corresponds to the application as amended by any amendment filed in the application. When processing is finished, the software will ask the applicant if the list of displayed files should be sent to the Office. The applicant will click or otherwise express his or her concurrence, and the EFS application files are electronically transmitted to the Office.

On receipt of the bundle of files comprising the application, the Office stores the bundle and takes it apart. The bundle is decrypted, the digital signature is checked, and the integrity of the package is confirmed. In the course of events, the Office sends an acknowledgment back to the applicant's computer providing the date and time of submission, the names and sizes of the files received, and other information to confirm the submission.

Obviously, an application submitted via EFS cannot include a payment by check or money order. Therefore, any publication fee or processing fee required for a copy of an application submitted via EFS for use in the patent application publication must be paid by an authorization to charge the fee to a credit card or Office deposit account.

The Office originally indicated that if a copy of an application being submitted to the Office for eighteen-month publication purposes contains a sequence listing, and the sequence listing is identical to a sequence listing previously submitted to the Office in compliance with §§ 1.821 through 1.825, the EFS copy of the application may contain a reference to the previously filed sequence listing in lieu of a copy of the previously filed sequence listing. *See Changes to Implement Eighteen-Month Publication of Patent Applications,* 65 FR at 17950, 1233 *Off. Gaz. Pat. Office* at 124. The Office, however, has determined that permitting an EFS copy of an application to reference a previously filed sequence listing (rather than include a copy of the sequence listing) will increase the chance for errors in the sequence listing included in the patent application publication. Thus, the Office is requiring that if a copy of an application being submitted to the Office for eighteen-month publication purposes contains a sequence listing, the EFS copy of the application must contain a text file copy of the sequence listing that if printed out on paper would be in compliance with § 1.823.

Finally, if the file containing a copy of an application being submitted to the Office for eighteen-month publication purposes occupies ten megabytes of memory or more, the copy of the application should be submitted on a Compact Disk-Read Only Memory (CD–ROM) or Compact Disk-Recordable (CD–R). The CD–ROM or CD–R containing the copy of the application should be addressed to: Box PGPub.

While the Office is using EFS for both new application filing and submission of a copy of a previously filed application for publication purposes, an EFS submission of a copy of an application for publication purposes will be different from the EFS submission of a new application. For example, the EFS submission of a copy of an application for publication purposes will not require an oath or declaration (in TIFF). In addition, the acknowledgment receipts issued by the Office will be different for the EFS submission of a copy of an application for publication purposes than it will be for the EFS submission of a new application.

Publication process: The current planning approach involves a fourteen-week publication cycle that results in the publication of patent application publications on Thursday of each week. Ideally, the publication date of an application will be the first Thursday after the date that is eighteen months after the filing date of the application, or if the application claims the benefit of an earlier filing date, the first Thursday after the date that is eighteen months after the earliest filing date for which a benefit is sought. An application, however, may not be published the first Thursday after the date that is eighteen months after the earliest filing date for which a benefit is sought if the application is not in condition for publication approximately fourteen months after the earliest filing date for which a benefit is sought (eighteen months less the fourteen-week publication cycle).

Obviously, there are events that will delay publication of some applications until a later date: *e.g.,* (1) The application claims the benefit under 35 U.S.C. 120 of an application filed more than eighteen months before the actual filing date of the application; (2) the basic filing fee or oath (or declaration) is not provided within eighteen months after the earliest filing date for which a benefit is sought; or (3) the application does not contain papers or drawings of publication quality within eighteen months after the earliest filing date for which a benefit is sought. In such situations, the publication date of an application will be the first Thursday after the date that is fourteen weeks after the application is in condition for publication. Applicants who attempt to delay publication by intentionally delaying the submission of the application content necessary for publication, however, may encounter a reduction in any patent term adjustment under 35 U.S.C. 154(b) (*see* 35 U.S.C. 154(b)(2)(C)(ii) and § 1.704(b)).

The Office plans to indicate a projected publication date on the filing receipt or indicate ''to be determined'' if the application is not in condition for publication. If events change the projected publication date by more than two weeks (*e.g.,* claim for priority under 35 U.S.C. 119(e) presented after mailing of the filing receipt) or the application content necessary for publication is provided, the Office will issue a change notification indicating the revised projected publication date.

The publication process involves producing weekly volumes of patent application publications on a variety of media: *e.g.,* the Office's Examiner Automated Search Tool (EAST) and Web-based Examiner Search Tool (WEST) search systems, optical disk products for sale to the public, and exchange with the Office's Intellectual Property exchange partners. Patent application publications will be available for viewing by the public in the Public Search Room via an on-line search system. The Office does not plan to provide paper copies of the patent application publications for placement in either the Public Search Room or the examiners' search rooms. The Office, however, will provide paper copies of the patent application publications to any member of the public on request (for a fee) in the manner that paper copies of patents are currently provided.

The publication process provides for: (1) Assembly of application bibliographic information for the patent application publication at fourteen weeks prior to the projected publication date; (2) assembly of the technical content (specification, including claims and abstract, and drawings) of the application for the patent application

publication at nine weeks prior to the projected publication date; and (3) placement of the application information as assembled into the patent application publication on publication media (*e.g.,* optical disks, magnetic tape) at four weeks prior to the projected publication date.

Any applicant seeking to abandon the application for the purpose of avoiding publication must take appropriate action (see § 1.138 discussed below) well prior to the projected publication date. If the application is not expressly abandoned at least four weeks prior to the projected publication date, the Office will probably not be able to avoid publication of the application or at least some application information because the Office will place the application (along with the thousands of other applications being published each week) on publication media (*e.g.,* optical disks, magnetic tape) four weeks prior to the projected date. This does not imply that a request to expressly abandon an application to avoid publication (§ 1.138) filed prior to this ''four-week'' time frame will ensure that the Office will be able to remove an application from publication. The Office simply cannot ensure that it can remove an application from publication or avoid publication of application information any time after the publication process for the application is initiated.

Access to the file wrapper and contents of a published application: The Office plans to permit: (1) Any member of the public to obtain (for a fee) a copy of the complete file wrapper and contents of, or a copy of a specific paper in, any published application, provided that no redacted copy was timely submitted for publication; (2) any member of the public to obtain (for a fee) an appropriately redacted copy of the file wrapper and contents of, or a copy of a specific paper in, any published application for which a redacted copy was timely submitted for publication; and (3) any member of the public to physically inspect (subject to the same conditions that apply to inspection of patented files) the file of any abandoned published application, provided that no redacted copy was timely submitted for publication.

Any member of the public may obtain status information concerning any published application via the Office's PAIR system. Permitting physical inspection of pending published applications, however, would interfere with the Office's ability to act on the applications within the time frames set forth in 35 U.S.C. 154(b)(1)(A) and (B). Thus, the Office must limit public access to the file wrapper of pending published applications to obtaining a copy produced by the Office (for a fee) to avoid conferring patent term adjustment on the applicant due to actions by members of the public.

Section 4805 of the American Inventors Protection Act of 1999 provides that the Comptroller General (in consultation with the Office) shall conduct a study and submit a report to Congress on the potential risks to the United States biotechnology industry relating to biological deposits in support of biotechnology patents, and that the Office shall consider the recommendations of such study in drafting regulations affecting biological deposits (including any modification of § 1.801 *et seq.*). Therefore, this notice does not contain any amendment to § 1.801 *et seq.* concerning the treatment of biological deposits in applications subject to eighteen-month publication.

Section 4732 of the American Inventors Protection Act of 1999 changed (among other things) the title ''Commissioner'' to ''Director.'' The title ''Commissioner,'' however, is not being changed to ''Director'' where it appears in the rules of practice involved in this final rule because legislation is pending before Congress that (if enacted) would restore the former title ''Commissioner.'' See Intellectual Property Technical Amendments Act of 2000, H.R. 4870, 106th Cong. (2000).

Discussion of Specific Rules

Title 37 of the Code of Federal Regulations, Parts 1 and 5, are amended as follows:

Section 1.9: Section 1.9(c) is amended to define a published application as used in 37 CFR chapter I to mean an application for patent which has been published under 35 U.S.C. 122(b).

Section 1.11: Section 1.11(a) is amended to include the file of an abandoned published application (except if a redacted copy of the application was used for the patent application publication) among the files that are open to inspection by the public.

Section 1.12: Section 1.12(a)(1) is amended to include the assignment records of a published patent application among the patent assignment records that are available to the public. Section 1.12(b) is amended to provide that the patent assignment records, digests, and indexes are available to the public unless they relate to pending or abandoned patent applications that have not been published under 35 U.S.C. 122(b).

Section 1.13: Section 1.13 is amended to include patent application publications among the records of the United States Patent and Trademark Office that are open to the public, and of which a copy (certified or uncertified) will be furnished (upon payment of the appropriate fee).

Section 1.14: Section 1.14(a) is amended to generally maintain the confidentiality of applications that have not been published as a U.S. patent application publication (see 35 U.S.C. 122(b)) pursuant to 35 U.S.C. 122(a). Status information is defined to include identification of whether the application has been published under 35 U.S.C. 122(b), as well as whether the application is pending, abandoned, or patented, and the application numerical identifier.

Section 1.14(b) is amended to provide that status information may also be supplied when the application is referred to by its numerical identifier in a U.S. patent application publication as well as a U.S. patent or a published international application. Section 1.14(b) is also amended to provide that status information may be supplied for an application which claims the benefit of the filing date of an application for which status information may be supplied. As a result, the public will be able to obtain continuity data for applications that have been published as a U.S. patent application publication or as a U.S. patent.

Section 1.14(c)(1) provides that a copy of an application-as-filed or a file wrapper and contents may be supplied where the appropriate fee is paid, and: (1) The application is incorporated by reference in a U.S. patent application publication or U.S. patent; or (2) the application is relied upon for priority under 35 U.S.C. 119(e) or 120 in a U.S. patent application publication or U.S. patent.

Section 1.14(c)(2) provides that copies of the file wrapper and contents of an application are available to the public when the application has been published as a U.S. patent application publication.

Section 1.14(e) is amended to provide public access to an abandoned application that is referenced in a U.S. patent application publication, as well as a U.S. patent, or another application that is open to public inspection.

Section 1.14(i) provides for greater access to international application files kept by the Office and applies to applications having an international filing date on or after November 29, 2000. Specifically, 35 U.S.C. 374 equates the publication under the PCT of an international application designating the U.S. to the publication of a U.S. application under 35 U.S.C. 122(b). After publication of an

application under 35 U.S.C. 122(b), the Office will make available copies of the application files and also allow for access to those files in accordance with § 1.14(c) and (e), respectively. Therefore, after publication of an international application designating the U.S. under PCT Article 21, the Office will make available copies of, and allow access to, those international application files which are kept in the Office (the Home, Search, and Examination Copies) to the extent permitted under the PCT. Additionally, § 1.14(i)(2) provides that copies of English language translations of international applications, which were published in a non-English language and which designated the U.S., and which have been submitted to the Office pursuant to 35 U.S.C. 154(d)(4), will also be available to the public. Requests for copies of, or access to, an application file under § 1.14(i) must be in the form of a written request and must include a showing that the international application has been published and that the U.S. was designated. Such a showing should preferably be in the form of the submission of a copy of the front page of the published international application. Additionally, requests for copies of international application files must also be accompanied by the appropriate fee.

Section 1.14(j) is amended to provide that this section not only applies when the Office provides access to or copies of the application, but also when the Office provides access to or copies of a part of an application.

Section 1.17: The heading of § 1.17 is amended to include a reference to reexamination to clarify that the enumerated fees in § 1.17 may also apply during reexamination proceedings, as well as to patent applications.

Section 1.17(h) is amended to include a petition under § 1.138(c) to expressly abandon an application to avoid publication among the petitions requiring the fee ($130) set forth in § 1.17(h).

Section 1.17(i) is amended to include processing a redacted copy of a paper submitted in the file of an application in which a redacted copy was submitted for the patent application publication (§ 1.217), processing a request for voluntary publication or republication of an application (§ 1.221), and processing a belated submission under § 1.99 (§ 1.99(e)) to the processing services requiring the processing fee ($130) set forth in § 1.17(i).

Sections 1.17(l) and 1.17(m) are amended to set forth the fees for filing a petition under § 1.137 for revival of a terminated reexamination proceeding (on the basis of unavoidable and unintentional delay). Section 1.17(l) is amended to reflect that its $110 petition fee ($55 for a small entity) is required for a petition under § 1.137(a) to revive a terminated reexamination proceeding on the basis of an unavoidable failure of the patent owner to timely respond. Section 1.17(m) is amended to reflect that its $1,240 petition fee ($620 for a small entity) is required for a petition under § 1.137(b) to revive a terminated reexamination proceeding on the basis of an unintentional failure to timely respond. Note, however, that the newly enacted unintentional revival provisions of the American Inventors Protection Act of 1999 are not effective in any reexamination until November 29, 2000.

Section 1.17(p) is amended to make its fee ($180) applicable to a third-party submission under § 1.99, as well as an information disclosure statement under § 1.97(c) or (d).

Section 1.17(t) is added to set forth the surcharge ($1,240) for accepting an unintentionally delayed claim for priority under 35 U.S.C. 119, 120, 121, or 365(a) or 365(c) (§§ 1.55 and 1.78).

Section 1.18: Section 1.18(d) is added to specify the publication fee ($300). In view of this addition to § 1.18, the heading of § 1.18 is also amended to refer to ''post-allowance (including issue) fees'' (instead of only ''issue fees'').

Section 1.19: Section 1.19(a) is amended to provide that its $3 (regular service), $6 (next business day delivery to Office Box), or $25 (expedited delivery by commercial delivery service) fee would also be applicable to a request for a copy of the paper portion of a patent application publication. The $25 fee set forth in § 1.19(a)(4) would apply to a request for a certified copy of a patent application publication.

Section 1.24: Section 1.24 is removed and reserved. The practice of using coupons to purchase, *e.g.,* patents, statutory invention registrations, and trademark registrations, is inefficient compared to alternatives such as payment by credit card (especially for orders placed via the Internet). Coupons sold by the Office (before coupon practice is abolished) may still be used but cannot be redeemed.

Section 1.52: Section 1.52(d) is amended to provide for nonprovisional applications and provisional applications filed in a language other than English. The provisions concerning the treatment of nonprovisional applications filed in a language other than English are revised for clarity, but otherwise remain unchanged (§ 1.52(d)(1)).

Section 1.52(d)(2) provides that if a provisional application is filed in a language other than English, an English translation will not be required in the provisional application. Section 1.52(d)(2) also contains a reference to § 1.78(a) concerning the requirements for claiming the benefit of the filing date of such a provisional application in a later filed nonprovisional application.

Section 1.55: Section 1.55 is amended to implement the provisions of 35 U.S.C. 119(b) as amended by section 4503(a) of the American Inventors Protection Act of 1999, by providing: (1) A time period within which a claim for the benefit of a prior foreign application must be stated or waived; and (2) provisions for the acceptance of an unintentionally delayed submission of a claim to the benefit of a prior foreign application.

Section 1.55(a) is amended to provide that: (1) In an original application filed under 35 U.S.C. 111(a) (other than a design application), the claim for priority must be presented during the pendency of the application, and within the later of four months from the actual filing date of the application or sixteen months from the filing date of the prior foreign application; (2) in an application that entered the national stage from an international application after compliance with 35 U.S.C. 371, the claim for priority must be made during the pendency of the application and within the time limit set forth in the PCT and the Regulations under the PCT; and (3) the claim for priority and the certified copy of the foreign application specified in 35 U.S.C. 119(b) or PCT Rule 17 must, in any event, be filed before the patent is granted.

Section 1.55(c) provides that any claim for priority under 35 U.S.C. 119(a)–(d) or 365(a) not presented within the time period provided by § 1.55(a) is considered to have been waived. Section 1.55(c) also provides that if a claim to priority under 35 U.S.C. 119(a)–(d) or 365(a) is presented after the time period provided by § 1.55(a), the claim may be accepted if the claim identifying the prior foreign application by specifying its application number, country, and the day, month and year of its filing was unintentionally delayed. Section 1.55(c) also provides that a petition to accept a delayed claim for priority under 35 U.S.C. 119(a)–(d) or 365(a) must be accompanied by: (1) The surcharge set forth in § 1.17(t); and (2) a statement that the entire delay between the date the claim was due under § 1.55(a)(1) and the date the claim was filed was unintentional, and that the Commissioner may require additional

information where there is a question whether the delay was unintentional.

Section 1.72: Section 1.72(a) is amended to provide that the title of the invention may not exceed 500 characters in length. The title character number limitation is necessary to ensure that the title can be captured and recorded in the Office's Patent Application Locating and Monitoring (PALM) system. Section 1.72(a) is also amended to provide that characters that cannot be captured and recorded in the Office's automated information systems (*e.g.,* PALM) may not be reflected in the Office's records in such systems or in documents created by the Office. Thus, if a title includes a character (images) that cannot be captured by PALM, that title will not appear in the Office's PALM records for that application, and may not be reflected in documents (*e.g.,* a filing receipt, patent application publication, or patent) created by the Office.

Section 1.76: Section 1.76 is amended to provide for the inclusion of assignee information in a new § 1.76(b)(7). Section 1.76(b)(7) provides that: (1) assignee information includes the name (either person or juristic entity) and address of the assignee of the entire right, title, and interest in an application; and (3) the inclusion of this information on the application data sheet does not substitute for compliance with any requirement of 37 CFR part 3 to have an assignment recorded by the Office. Providing assignee information on the application data sheet is considered a request to include such information on the patent application publication, since there is no other reason for including such information on the application data sheet.

Section 1.78: Section 1.78(a) is amended to implement the provisions of 35 U.S.C. 119(e) and 120 as amended by § 4503(b) of the American Inventors Protection Act of 1999, by providing: (1) A time period within which a claim to the benefit of a prior nonprovisional or provisional application must be stated or waived; and (2) provisions for the acceptance of the unintentionally delayed submission of a claim to the benefit of a prior nonprovisional or provisional application.

Section 1.78(a)(2) is amended to provide that (except for a continued prosecution application filed under § 1.53(d)) any claim to the benefit of a nonprovisional application or international application must be made during the pendency of the application and within the later of four months from the actual filing date of the application or sixteen months from the filing date of the prior application. Section 1.78(a)(2) also provides that the failure to timely submit the reference required by 35 U.S.C. 120 and § 1.78(a)(2) is considered a waiver of any benefit under 35 U.S.C. 120, 121, or 365(c) to such prior application, but that the time period set forth in § 1.78(a)(2) does not apply to an application for a design patent.

Section 1.78(a)(2) also provides that if the application claims the benefit of an international application, the first sentence of the specification must include an indication of whether the international application was published under PCT Article 21(2) in English (regardless of whether benefit to such application is claimed in the application data sheet).

Sections 1.78(a)(3) and 1.78(a)(4) are redesignated as § 1.78(a)(4) and 1.78(a)(5), respectively.

Section 1.78(a)(3) provides that if the reference required by 35 U.S.C. 120 and § 1.78(a)(2) is presented in a nonprovisional application after the time period provided by § 1.78(a)(2), the claim under 35 U.S.C. 120, 121, or 365(c) for the benefit of a prior filed copending nonprovisional application or international application designating the United States may be accepted if the reference identifying the prior application by application number or international application number and international filing date was unintentionally delayed. Section 1.78(a)(3) also provides that a petition to accept an unintentionally delayed claim under 35 U.S.C. 120, 121, or 365(c) for the benefit of a prior filed copending application must be accompanied by: (1) The surcharge set forth in § 1.17(t); and (2) a statement that the entire delay between the date the claim was due under § 1.78(a)(2) and the date the claim was filed was unintentional, but the Commissioner may require additional information where there is a question whether the delay was unintentional.

Section 1.78(a)(4) is amended to provide that, for a nonprovisional application to claim the benefit of a provisional application, the provisional application must be entitled to a filing date as set forth in § 1.53(c), and the basic filing fee set forth in § 1.16(k) must be paid within the time period set forth in § 1.53(g).

Section 1.78(a)(5) provides that any nonprovisional application claiming the benefit of a provisional application filed in a language other than English must (in addition to the reference required by 35 U.S.C. 119(e) and § 1.78(a)(5)) contain an English language translation of the non-English language provisional application and a statement that the translation is accurate. Section 1.78(a)(5) also provides any claim for the benefit of a provisional application and English language translation of a non-English language provisional application must be submitted during the pendency of the nonprovisional application, and within the later of four months from the actual filing date of the nonprovisional application or sixteen months from the filing date of the prior provisional application. Section 1.78(a)(5) also provides that the failure to timely submit the reference and English language translation of a non-English language provisional application required by 35 U.S.C. 119(e) and § 1.78(a)(5) is considered a waiver of any benefit under 35 U.S.C. 119(e) to such prior provisional application.

Section 1.78(a)(6) provides that if the reference or English language translation of a non-English language provisional application required by 35 U.S.C. 119(e) and § 1.78(a)(5) is presented in a nonprovisional application after the time period provided by § 1.78(a)(5), the claim under 35 U.S.C. 119(e) for the benefit of a prior filed provisional application may be accepted during the pendency of the nonprovisional application if the reference identifying the prior application by provisional application number and any English language translation of a non-English language provisional application were unintentionally delayed. Section 1.78(a)(6) also provides that a petition to accept an unintentionally delayed claim under 35 U.S.C. 119(e) for the benefit of a prior filed provisional application must be accompanied by: (1) The surcharge set forth in § 1.17(t); and (2) a statement that the entire delay between the date the claim was due under § 1.78(a)(5) and the date the claim was filed was unintentional, but that the Commissioner may require additional information where there is a question whether the delay was unintentional.

Section 1.84: Section 1.84(a)(2) is amended to provide that color drawings are not permitted in an application, or copy thereof, submitted under the Office electronic filing system. Section 1.84(a)(2) is also amended to provide that any petition to accept color drawings must include a black and white photocopy that accurately depicts, to the extent possible, the subject matter shown in the color drawing. Since § 1.84(b) provides that color photographs will be accepted in utility patent applications if the conditions for accepting color drawings have been satisfied, the provisions and restrictions in amended § 1.84(a)(2) would also apply to color photographs.

Section 1.84(e) is amended to provide that photographs must be developed on

paper meeting the sheet-size requirements of § 1.84(f) and the margin requirements of § 1.84(g).

Section 1.84(j) is amended to refer to the view suitable for the front page of the patent application publication and patent, rather than the view suitable for the Official Gazette, since the front page of the patent (and patent application publication) includes the information that is (or would be) included in the Official Gazette, and the Office does not plan on creating an Official Gazette for patent application publications. Section 1.84(j) is also amended to provide that: (1) One of the views should be suitable for inclusion on the front page of the patent application publication and patent as the illustration of the invention; and (2) applicant may suggest a single view (by figure number) for inclusion on the front page of the patent application publication and patent. Applicants should indicate in the application transmittal letter the figure number of the view suggested for inclusion on the front page of the patent application publication and patent. The Office, however, is not bound by applicant's suggestion.

Section 1.85: Section 1.85(a) is amended to provide that a utility or plant application will not be placed on the files for examination until objections to the drawings have been corrected. As discussed above, these objections will concern deficiencies that must be corrected for the drawings to be of sufficient quality for use in creating a patent application publication. For example, the drawings must be reproducible and any text in the drawings must be in the English language. Since the Office plans to use the copy of the application (including the drawings) from its PACR database to create the patent application publication, the Office must require that new or corrected drawings correcting the objections to the drawings be filed before the application is released from OIPE and placed on the files for examination.

Even if an applicant files the application with a request that the application not be published pursuant to 35 U.S.C. 122(b), the applicant may rescind that request at any time. *See* 35 U.S.C. 122(b)(2)(B)(ii). In addition, at the time the Office is recording a copy of the application in its PACR database, the Office is not in a position to know whether the applicant will file an electronic filing system copy of the application for use in creating the patent application publication. Therefore, the Office must be prepared to create a patent application publication from its PACR database for each application and insist that objections to the drawings be corrected in all utility and plant applications before the application can be released from OIPE.

Section 1.85(a) is also amended to provide that (except as provided in § 1.215(c)) any patent application publication will not include drawings filed after the application has been placed on the files for examination. Thus, corrected drawings submitted after the application has been released from OIPE will not be added to the PACR database or used to create the patent application publication.

Section 1.85(a) is also amended to provide that, unless applicant is otherwise notified in an Office action, objections to the drawings in a utility or plant application will not be held in abeyance, and a request to hold objections to the drawings in abeyance will not be considered a *bona fide* attempt to advance the application to final action (§ 1.135(c)). That is, if an Office action or notice contains an objection to the drawings (and does not expressly permit such objection to be held in abeyance) and the applicant's reply does not correct the objection, the applicant will be advised that the reply is non-responsive and given the remainder of the period set in the original Office action or notice (and not a new period under § 1.135(c)) within which to correct the objection.

Since design applications are not subject to the eighteen-month publication provisions of 35 U.S.C. 122(b), drawings in a design application will continue to be admitted for examination if the drawings meet the requirements of § 1.84(e), (f), and (g) and are suitable for reproduction.

Section 1.98: Section 1.98(a)(2)(i) is amended to also refer to U.S. patent application publications. Section 1.98(b) is amended to provide that each U.S. patent application publication listed in an information disclosure statement shall be identified by applicant, patent application publication number, and publication date.

Section 1.99: Section 1.99(a) provides that a submission by a member of the public of patents or publications relevant to a pending published application will be entered in the application file if the submission complies with the requirements of § 1.99 and the application is still pending when the submission and application file are brought before the examiner. The entry of such a submission does not mean that the patents or printed publications contained in the submission will be necessarily considered and cited by the examiner. If the examiner considers a patent or printed publication contained in the submission to be pertinent in determining patentability, the examiner will initial that patent or printed publication on the listing of the patents or publications submitted for consideration by the Office. Unless, however, a patent or publication in a submission under § 1.99 is discussed during prosecution, the patent or publication will not be deemed to have been ''considered'' pursuant to the Office's *Portola* guidelines. *See* Guidelines for Reexamination of Cases in View of In re Portola Packaging, Inc., 110 F.3d 786, 42 USPQ2d 1295 (Fed. Cir. 1997), Notice, 64 FR 15346 (Mar. 31, 1999), 1223 Off. Gaz. Pat. Office 124 (June 22, 1999).

Section 1.99(b) provides that a submission under § 1.99 must identify the application to which it is directed by application number and include: (1) The fee set forth in § 1.17(p); (2) a listing of the patents or publications submitted for consideration by the Office (including the date of publication of each patent or publication); (3) a copy of each listed patent or publication in written form or at least the pertinent portions; and (4) an English language translation of all the necessary and pertinent parts of any non-English language patent or publication in written form relied upon.

Section 1.99(c) provides that a submission under § 1.99 must be served upon the applicant in accordance with § 1.248.

Section 1.99(d) provides that a submission under § 1.99 may not include any explanation of the patents or publications, or any other information, and that a submission under § 1.99 is limited to ten total patents or publications. Section 1.99(d) also provides that the Office will dispose of such explanation or information if included in a submission under § 1.99. The Office plans to review submissions under § 1.99 (*e.g.*, by a Supervisory Patent Examiner) to determine whether they are limited to patents and publications before the submission is placed in the file of the application and forwarded to the examiner, and to remove any explanations or information (other than patents and publications) from the submission before it is placed in the file of the application and forwarded to the examiner.

Section 1.99(e) provides that a submission under § 1.99 must be filed within two months from the date of publication of the application (§ 1.215(a)), or prior to the mailing of a notice of allowance (§ 1.311), whichever is earlier. Section 1.99(e) also provides

that any submission under § 1.99 not filed within this period is permitted only when the patents or publications could not have been submitted to the Office earlier, and must also be accompanied by the processing fee set forth in § 1.17(i). The phrase ''publication of the application (§ 1.215(a))'' means that republication of an application under § 1.211 has no effect on (*e.g.*, does not restart) the period specified in § 1.99(e). Section 1.99(e) also provides that a submission by a member of the public to a pending published application that does not comply with the requirements of § 1.99 will be returned or discarded.

Section 1.99(f) provides that the involvement of a member of the public in filing a submission under § 1.99 ends with the filing of the submission.

Section 1.103: Section 1.103 is amended to provide for deferred examination for up to three years from the earliest filing date for which a benefit is claimed under title 35, United States Code, at the request of the applicant. The Office previously proposed a ''deferred examination'' practice (in addition to the current suspension of action practices) to implement the Patent Business Goals. *See* Changes to Implement the Patent Business Goals, Advance Notice of Proposed Rulemaking, 63 FR 53498, 53516–17 (Oct. 5, 1998), 1215 Off. Gaz. Pat. Office 87, 104–05 (Oct. 27, 1998). The Office, however, did not proceed with proposing changes to § 1.103 to implement a ''deferred examination'' practice. *See* Changes to Implement the Patent Business Goals, Notice of Proposed Rulemaking, 64 FR 53772, 53775 (Oct. 4, 1999), 1228 Off. Gaz. Pat. Office 15, 18 (Nov. 2, 1999). The Office is now proceeding with changes to § 1.103 to implement a ''deferred examination'' practice.

Section 1.103(d) is added to provide for deferral of examination if the applicant requests deferred examination under § 1.103(d) and pays the publication fee set forth in § 1.18(d) and the processing fee set forth in § 1.17(i). The following conditions must also be met: (1) the application must be filed on or after November 29, 2000 (or be an application for which applicant requests voluntary publication), and be an original (*i.e.*, non-reissue) utility or plant application filed under § 1.53(b) (*i.e.*, not a continued prosecution application under § 1.53(d)) or an application resulting from entry of an international application into the national stage after compliance with § 1.494 or § 1.495; (2) the applicant must not have filed a nonpublication request under § 1.213(a), or have filed a request under § 1.213(b) to rescind a previously filed nonpublication request; (3) the application must be in condition for publication as provided in § 1.211(c); and (4) the Office must not have issued either an Office action under 35 U.S.C. 132 or a notice of allowance under 35 U.S.C. 151.

The reasons given for opposition to the October 1998 proposal concerning ''deferred examination'' were that: (1) The ''deferred examination'' of an application under an extended suspension of action and the publication of an application under such suspension of action would create uncertainty over legal rights; and (2) the publication provisions of such a suspension of action procedure amount to an eighteen-month publication system that is not authorized by 35 U.S.C. 122. The Office is adopting its deferred examination proposal because: (1) Since the deferral of examination under § 1.103(d) is limited to three years from the earliest filing date for which a benefit is claimed under title 35, United States Code, there will be no greater uncertainty over legal rights than currently exists under reissue or continuing application practice; and (2) 35 U.S.C. 122(b) now provides for eighteen-month publication of patent applications (with certain exceptions).

Section 1.104: Section 1.104(a) is amended by eliminating the provisions concerning the circumstances under which an examiner will consider applications to be copending (§ 1.104(a)(5)). This material pertains only to internal instructions to examiners and is considered appropriate for inclusion in the *MPEP* rather than the rules of practice.

Section 1.104(d) is amended to provide that if domestic (U.S.) patent application publications are cited by the examiner, their publication number, publication date, and the names of the applicants will be stated.

Section 1.130: Section 1.130(a) is amended to refer to published applications (as well as patents). Specifically, § 1.130 is also applicable to a rejection of a claim in an application or patent under reexamination based upon a patent application publication in the situation in which the application or patent under reexamination and the published application are currently owned by the same party.

Section 1.131: Section 1.131(a) is amended to provide that: (1) The effective date of a U.S. patent, U.S. patent application publication, or international application publication under PCT Article 21(2) is the earlier of its publication date or the date that it is effective as a reference under 35 U.S.C. 102(e); and (2) prior invention may not be established under § 1.131 if the rejection is based upon either a U.S. patent or a U.S. patent application publication of a pending or patented application to another or others which claims the same patentable invention as defined in § 1.601(n).

Section 1.132: Section 1.132 is revised to provide that when any claim of an application or a patent under reexamination is rejected or objected to, any evidence submitted to traverse the rejection or objection on a basis not otherwise provided for must be by way of an oath or declaration under this section. This adopts the long-standing policy that any oath or declaration not otherwise provided for is considered under § 1.132. *See MPEP* 716.

Section 1.132 as adopted does not provide that an oath or declaration may not be submitted under § 1.132 to traverse a rejection if the rejection is based upon a U.S. patent or a U.S. patent application publication of a pending or patented application to another or others which claims the same patentable invention as defined in § 1.601(n). If an oath or declaration is submitted under § 1.132 to traverse a rejection, and the rejection is based upon a U.S. patent or a U.S. patent application publication of a pending or patented application to another or others which claims the same patentable invention as defined in § 1.601(n), the Office will consider on a case-by-case basis whether the oath or declaration may be considered sufficient to overcome the rejection, or whether the applicant will be required to establish priority of invention through an interference proceeding.

Section 1.137: Section 1.137 is amended to: (1) Make its provisions applicable to the revival of a terminated reexamination proceeding; (2) provide for the revival of an application abandoned pursuant to 35 U.S.C. 122(b)(2)(B)(iii) for failure to timely notify the Office of the filing of an application in a foreign country or under a multinational treaty; and (3) reorganize certain provisions for clarity.

Section 1.137 (including its heading) is amended to provide for revival of *ex parte* reexamination proceedings terminated under § 1.550(d), for revival of *inter partes* reexamination proceedings terminated under § 1.957(b), or for revival of rejected claims terminated under § 1.957(c) in an *inter partes* reexamination proceeding where further prosecution has been limited to claims found allowable at the time of the failure to respond. These changes to § 1.137 were discussed in the notice of proposed rulemaking to

implement the optional inter partes reexamination provisions of the American Inventors Protection Act of 1999. *See* Rules to Implement Optional Inter Partes Reexamination Proceedings, Notice of Proposed Rulemaking, 65 FR 18154 (Apr. 6, 2000), 1234 Off. Gaz. Pat. Office 93 (May 23, 2000).

Specifically, § 1.137(a) is amended to include revival of unavoidably terminated reexamination proceedings. The unavoidable delay provisions of 35 U.S.C. 133 are imported into and are applicable to reexamination proceedings by 35 U.S.C. 305 and 314. *See In re Katrapat,* 6 USPQ2d 1863 (Comm'r Pats. 1988). Section 1.137(b) is amended to provide for revival of unintentionally terminated reexamination proceedings. The unintentional delay fee provisions of 35 U.S.C. 41(a)(7) are imported into and are applicable to all reexamination proceedings by § 4605 of the American Inventors Protection Act of 1999. Note that these changes pertain to *all* reexaminations (*i.e.*, both *ex parte* reexaminations filed under § 1.510 and *inter partes* reexaminations filed under § 1.913) and become effective on November 29, 2000 (one year after enactment of the American Inventors Protection Act of 1999).

The reconsideration provisions of § 1.137 (formerly § 1.137(d), and § 1.137(e) as adopted) are amended to provide that extensions of time for requesting reconsideration of a decision dismissing or denying a petition requesting revival of a terminated reexamination proceeding under § 1.137(a) or § 1.137(b) must be filed under § 1.550(c) for a terminated *ex parte* reexamination proceeding, or under § 1.956 for a terminated *inter partes* reexamination proceeding.

Section 1.137(f) provides for the revival of an application abandoned for failure to timely notify the Office of a foreign filing. As discussed above, if an applicant makes a request (nonpublication request) upon filing with the appropriate certifications, the application will not be published under 35 U.S.C. 122(b)(1). *See* 35 U.S.C. 122(b)(2)(B)(i). An applicant who has made a nonpublication request but who subsequently files an application directed to the invention disclosed in the application filed in the Office in a foreign country, or under a multilateral international agreement, that requires eighteen-month publication, must notify the Office of such filing within forty-five days after the date of such filing, with the failure to timely provide such a notice to the Office resulting in abandonment of the application. *See* 35 U.S.C. 122(b)(2)(B)(iii). 35 U.S.C. 122(b)(2)(B)(iii), however, also provides that an application abandoned as a result of the failure to timely provide such a notice to the Office is subject to revival if the ''delay in submitting the notice was unintentional.'' *See id.*

35 U.S.C. 122(b)(2)(B)(iii) provides for revival only on the basis of unintentional delay, and not on the basis of unavoidable delay. Compare 35 U.S.C. 122(b)(2)(B)(iii) (''delay * * * was unintentional'') with 35 U.S.C. 111(a)(4) (''delay * * * was unavoidable or unintentional''). Therefore, § 1.137(f) provides that a nonprovisional application abandoned pursuant to 35 U.S.C. 122(b)(2)(B)(iii) for failure to timely notify the Office of the filing of an application in a foreign country or under a multinational treaty that requires eighteen-month publication may be revived only pursuant to § 1.137(b). Section 1.137(f) also provides that the reply requirement of § 1.137(c) is met by the notification of such filing in a foreign country or under a multinational treaty, but the filing of a petition under § 1.137 will not operate to stay any period for reply that may be running against the application. Since the Office cannot ascertain whether an application is abandoned under 35 U.S.C. 122(b)(2)(B)(iii), the Office may continue to process and examine the application until the applicant notifies the Office that the application is abandoned. Therefore, § 1.137(f) provides that the filing of a petition under § 1.137 to revive such an application will not operate to stay any period for reply that may be running against the application.

Section 1.137 is also amended to locate the ''reply requirement'' provisions in § 1.137(c), rather than include duplicative provisions concerning the reply requirement in each of § 1.137(a) and (b). Thus, the terminal disclaimer provisions of § 1.137(c), reconsideration provisions of § 1.137(d), and provisional application provisions of § 1.137(e) are moved to § § 1.137(d), 1.137(e), and 1.137(g), respectively. In addition, § 1.137(c) also provides that in an application abandoned for failure to pay the publication fee, the required reply must include payment of the publication fee. Thus, even if an application abandoned for failure to pay the publication fee is being revived solely for purposes of continuity with a continuing application, the petition to revive under § 1.137 must include payment of the publication fee (unless previously submitted).

Section 1.137 is also amended to take into account the provisions of 35 U.S.C. 119(e)(3), which extend the pendency of a provisional application to the next succeeding secular or business day if the day that is twelve months after the filing date of the provisional application falls on a Saturday, Sunday, or Federal holiday within the District of Columbia.

Section 1.138: Section 1.138(a) is amended to add ''or publication'' to clarify that a letter of express abandonment may not be recognized by the Office unless it is actually received by appropriate officials in time to act before the date of publication.

Section 1.138(c) is added to provide for a petition for express abandonment to avoid publication. Section 1.138(c) provides that an applicant seeking to abandon an application to avoid publication of the application (see § 1.211(a)(1)) must submit a declaration of express abandonment by way of a petition including the fee set forth in § 1.17(h) in sufficient time to permit the appropriate officials to recognize the abandonment and remove the application from the publication process. The petition will be granted when it is recognized in sufficient time to avoid publication of application information and will be denied when it is not recognized in sufficient time to avoid publication of application information. This will avert the situation in which an applicant files a letter of express abandonment to avoid publication, the letter of express abandonment is not recognized in sufficient time to avoid publication, upon publication the applicant wishes to rescind the letter of express abandonment, and the Office cannot revive the application (once the letter of express abandonment is recognized) because the application was expressly and intentionally abandoned by the applicant.

As discussed above, the publication process is a fourteen-week process, and the applicant should expect that the petition will not be granted and the application will be published in regular course unless such declaration of express abandonment and petition are received by the appropriate officials more than four weeks prior to the projected date of publication.

Section 1.165: Section 1.165(b) is amended to provide that if plant application drawings include a color drawing or photograph, a black and white photocopy that accurately depicts, to the extent possible, the subject matter shown in the color drawing or photograph must be submitted.

Section 1.211: Sections 1.211, 1.213, 1.215, 1.217, 1.219, and 1.221 are added to provide for the pre-grant publication of applications under 35 U.S.C. 122(b).

Section 1.211(a) provides that (with certain exceptions) each U.S. national application for patent filed in the Office under 35 U.S.C. 111(a) and each international application in compliance with 35 U.S.C. 371 will be published promptly after the expiration of a period of eighteen months from the earliest filing date for which a benefit is sought under title 35, United States Code.

Section 1.211(a)(1) provides that the Office will not publish applications that are recognized as no longer pending. The phrase ''recognized by the Office as no longer pending'' covers the situation in which the period for reply (either the shortened statutory period or the maximum extendable period for reply) to an Office action has expired, but the Office has not yet entered the change of status (to abandoned) of the application in the PALM system and mailed a notice of abandonment. An application will remain in the publication process until the PALM system indicates that the application is abandoned. Obviously, once the PALM system indicates that an application is abandoned, the Office will attempt to remove the application from the publication process and avoid dissemination of application information. How much dissemination of application information can be avoided depends upon how close it is to the publication date when the Office recognizes the application as abandoned. Unless an applicant has received a notice of abandonment, an applicant who wants to abandon the application to avoid publication must file a petition under § 1.138(c) to expressly abandon the application and avoid publication. An applicant permitting an application to become abandoned (for failure to reply to an Office action) to avoid publication by passively waiting for the Office to recognize that the application has become abandoned must bear the risk that the Office will not recognize that the application has become abandoned and change the status of the application in the PALM system in sufficient time to avoid publication.

Section 1.211(a)(2) provides that the Office will not publish applications that are national security classified (see § 5.2(c)), subject to a secrecy order under 35 U.S.C. 181, or under national security review.

Section 1.211(a)(3) provides that the Office will not publish applications that have issued as patents in sufficient time to be removed from the publication process. If the pre-grant publication process coincides with the patent issue process, the Office will continue with the pre-grant publication process until a patent actually issues. This is because there are many instances in which the Office mails a notice of allowance (§ 1.311) in an application but the application does not issue as a patent in regular course (abandonment due to failure to pay the issue fee, or withdrawal from issue either *sua sponte* by the Office or on petition of the applicant). Therefore, the Office will not discontinue the pre-grant publication process until a patent has actually issued. Since the Office cannot discontinue the pre-grant publication process during the last two weeks of the publication process, this will result in a few applications being issued as patents and subsequently being published as patent application publications. The Office will refund the publication fee (if paid) if the application is not published as a patent application publication, but will not refund the publication fee if the application is published as a patent application publication, even if it is published after the patent issues.

Section 1.211(a)(4) also provides that the Office will not publish applications that were filed with a nonpublication request in compliance with § 1.213(a).

Section 1.211(b) provides that provisional applications under 35 U.S.C. 111(b) shall not be published. Section 1.211(b) also provides that design applications under 35 U.S.C. chapter 16 and reissue applications under 35 U.S.C. chapter 25 shall not be published under § 1.211. Provisional applications under 35 U.S.C. 111(b) and design applications under 35 U.S.C. chapter 16 are excluded from the pre-grant publication provisions of 35 U.S.C. 122(b). *See* 35 U.S.C. 122(b)(2)(A)(iii) and (iv). Reissue applications under 35 U.S.C. chapter 25 are not maintained in confidence under 35 U.S.C. 122(a). *See* § 1.11(b).

Section 1.211(c) provides that the Office will not publish an application filed under 35 U.S.C. 111(a) until it includes the basic filing fee, an English translation if in a language other than English, and an executed oath or declaration. Section 1.211(c) also provides that publishing may be delayed until the application includes a specification having papers in compliance with § 1.52 and an abstract (§ 1.72(b)), drawings in compliance with § 1.84, and a sequence listing in compliance with § 1.821 through 1.825 (if applicable), and until any petition under § 1.47 is granted. That is, if an application does not contain the application content on papers or drawings of sufficient quality to create a patent application publication by eighteen months from its earliest claimed filing date, the Office will publish the application as soon as practical after these deficiencies are corrected.

Section 1.211(d) provides that the Office may refuse to publish an application, or to include a portion of an application in the patent application publication (§ 1.215), if publication of the application or portion thereof would violate Federal or state law, or if the application or portion thereof contains offensive or disparaging material. A similar provision exists in PCT practice, in that the International Bureau (IB) may omit expressions or drawings in an international application from its publications if the expressions or drawings are contrary to morality or public order, or contain disparaging statements. *See* PCT Article 21(6) and Rule 9.

Section 1.211(e) provides that the publication fee set forth in § 1.18(d) must be paid in each application published under this section before the patent will be granted, but does not require that the publication fee be paid prior to publication. If an application is subject to publication under this section, the sum specified in the notice of allowance under § 1.311 will also include the publication fee which must be paid within three months from the date of mailing of the notice of allowance to avoid abandonment of the application. This three-month period is not extendable. If the application is not published under this section, the publication fee (if paid) will be refunded.

Section 1.213: Section 1.213 implements the provisions of 35 U.S.C. 122(b)(2)(B)(i)–(iii). An applicant may request that the application not be published under 35 U.S.C. 122(b) and § 1.211 if the invention disclosed in an application has not been and will not be the subject of an application filed in another country, or under a multilateral international agreement, that requires publication of applications eighteen months after filing. Section 1.213(a) requires that a request that an application not be published under 35 U.S.C. 122(b) (nonpublication request) must: (1) Be submitted with the application upon filing; (2) state in a conspicuous manner that the application is not to be published under 35 U.S.C. 122(b); (3) contain a certification that the invention disclosed in the application has not been and will not be the subject of an application filed in another country, or under a multilateral agreement, that requires publication at eighteen months after filing; and (4) be signed in compliance with § 1.33(b). The requirement that a nonpublication request be submitted ''upon filing'' is a requirement of statute

(35 U.S.C. 122(b)(2)(B)(i)), and, as such, the Office must deny any petition requesting a waiver of this provision of § 1.213(a).

Section 1.213(b) provides that the applicant may rescind a nonpublication request at any time. *See* 35 U.S.C. 122(b)(2)(B)(ii). Section 1.213(b) also provides that a request to rescind a nonpublication request under § 1.213(a) must: (1) Identify the application to which it is directed (§ 1.5); (2) state in a conspicuous manner that the request that the application is not to be published under 35 U.S.C. 122(b) is rescinded; and (3) be signed in compliance with § 1.33(b). Once a request under § 1.213(b) to rescind a nonpublication request is filed and processed by the Office, the application will be scheduled for publication in accordance with § 1.211(a).

Section 1.213(c) reiterates the provisions of 35 U.S.C. 122(b)(2)(B)(iii). Section 1.213(c) specifically states that if an applicant who has submitted a nonpublication request under § 1.213(a) subsequently files an application directed to the invention disclosed in the application in which the nonpublication request was submitted in another country, or under a multilateral international agreement, that requires publication of applications eighteen months after filing, the applicant must notify the Office of such filing within forty-five days after the date of the filing of such foreign or international application. The failure to timely notify the Office of the filing of such foreign or international application shall result in abandonment of the application in which the nonpublication request was submitted. *See* 35 U.S.C. 122(b)(2)(B)(iii).

Section 1.215: Section 1.215(a) indicates that the publication of an application under 35 U.S.C. 122(b) shall include a patent application publication. The Office will not mail a paper copy of the patent application publication to the applicant, but will mail a notice to the applicant indicating that the application has been published.

Section 1.215(a) also provides that the date of publication shall be indicated on the patent application publication.

Section 1.215(a) also provides that (except as discussed below in § 1.215(c)) the patent application publication will be based upon the application papers deposited on the filing date of the application, except for preliminary amendments, as well as the executed oath or declaration submitted to complete the application, and any application papers or drawings submitted in reply to a preexamination notice requiring a title and abstract in compliance with § 1.72, application papers in compliance with § 1.52, drawings in compliance with § 1.84, or a sequence listing in compliance with §§ 1.821 through 1.825. That is, the patent application publication will not reflect the application as it was amended during the examination process, but will only reflect the application as recorded in the Office's PACR database.

Section 1.215(b) provides a mechanism by which applicants may have assignee information (the name and address of the assignee of the entire right, title, and interest in an application) included on the patent application publication. To have assignee information included on the patent application publication, the applicant must include the assignee information on the application transmittal sheet or the application data sheet under § 1.76. Providing assignee information on the application transmittal sheet or the application data sheet will be treated as an indication that the assignee information is being provided for inclusion on the patent application publication. Providing assignee information on the application transmittal sheet or the application data sheet does not substitute for compliance with any requirement of 37 CFR part 3 to have an assignment recorded by the Office.

If applicant wants to submit assignee information for inclusion on the patent application publication after filing (*i.e.,* after the application transmittal sheet or the application data sheet has been filed), applicant must file a supplemental application data sheet (§ 1.76) containing the assignee information. This applies to changes to previously submitted assignee information, as well as assignee information being provided for the first time. Nevertheless, assignee information may not be included on the patent application publication unless this information is provided on the application transmittal sheet or application data sheet included with the application on filing.

Section 1.215(c) provides a mechanism by which applicants may have the patent application publication reflect the application as amended during the examination process (rather than the application information as recorded in the Office's PACR database). Section 1.215(c) provides that the Office will use an applicant-supplied copy of the application (specification, drawings, and oath or declaration), provided that: (1) The copy is in compliance with the Office electronic filing system (EFS) requirements; and (2) the EFS copy is filed within one month of the actual filing date of the application or fourteen months of the earliest filing date for which a benefit is sought, whichever is later.

The fourteen-month period differs from the sixteen-month period provided in § 1.217 for submitting a redacted copy of an application because the sixteen-month period provided in § 1.217 is not based upon the fourteen-week publication cycle but is provided for by statute (35 U.S.C. 122(b)(2)(B)(v)).

Section 1.215(d) provides that if the copy of the application does not comply with the Office EFS requirements, the Office will publish the application based upon the application records in the Office's PACR database (as provided in § 1.215(a)). If, however, the Office has not started the publication process, the Office may use an untimely filed copy of the application supplied by the applicant under § 1.215(c) in creating the patent application publication.

Section 1.217: Section 1.217(a) implements the provisions of 35 U.S.C. 122(b)(2)(B)(v), and provides that if an applicant has filed applications in one or more foreign countries, directly or through a multilateral international agreement, and such foreign-filed applications or the description of the invention in such foreign-filed applications is less extensive than the application or description of the invention in the application filed in the Office, the applicant may submit a redacted copy of the application filed in the Office for publication, eliminating any part or description of the invention that is not also contained in any of the corresponding applications filed in a foreign country. Section 1.217(a) also provides that the Office will publish the application as provided in § 1.215(a) unless the applicant files a redacted copy of the application in compliance with § 1.217 within sixteen months after the earliest filing date for which a benefit is sought under title 35, United States Code. This sixteen-month period is provided by statute (35 U.S.C. 122(b)(2)(B)(v)), and as such, requests for waiver of this sixteen-month period will be denied.

As discussed above, this sixteen-month period provided in § 1.217 differs from the fourteen-month period provided in § 1.215(c) because the sixteen-month period provided in § 1.217 is not based upon the fourteen-week publication cycle but is provided for by statute (35 U.S.C. 122(b)(2)(B)(v)). If a redacted copy of an application is submitted in compliance with § 1.217 but later than four months prior to the projected publication date, the Office will be required to reprocess the patent

application publication (for which assembly will have already started) using the redacted copy of the application provided by applicant.

Section 1.217(b) provides that the redacted copy of the application must be submitted in compliance with the Office EFS requirements. Section 1.217(b) also provides that the title of the invention in the redacted copy of the application must correspond to the title of the application at the time the redacted copy of the application is submitted to the Office. The Office uses the title of the invention (among other information) as provided in an EFS copy of an application to confirm the identity of the application for which the EFS copy is submitted. Thus, if a portion of the title has been redacted such that the title (as redacted) in the EFS copy of the application is different from the title of the invention for the application as shown in PALM, it will appear that the redacted EFS copy of the application incorrectly identifies the application for which the redacted EFS copy is submitted. If an applicant wants to redact a portion of the title, the applicant must first submit an amendment to the title of the invention such that it will correspond to the title as redacted. Section 1.217(b) also provides that if the redacted copy of the application does not comply with the Office EFS requirements, the Office will publish the application based upon the unredacted records in the Office's PACR database.

Section 1.217(c) provides that the applicant must also concurrently submit in paper (§ 1.52(a)) to be filed in the application: (1) A certified copy of each foreign-filed application that corresponds to the application for which a redacted copy is submitted; (2) a translation of each such foreign-filed application that is in a language other than English, and a statement that the translation is accurate; (3) a marked-up copy of the application showing the redactions in brackets; and (4) a certification that the redacted copy of the application eliminates only the part or description of the invention that is not contained in any application filed in a foreign country, directly or through a multilateral international agreement, that corresponds to the application filed in the Office. The provisions of § 1.217(c) are designed to ensure that any patent application publication based upon a redacted copy of an application contains the parts and description of the invention contained in any of the corresponding applications filed in a foreign country.

Section 1.217(d) provides a mechanism for obtaining an appropriately redacted copy of the application contents to provide to members of the public requesting a copy of the file wrapper and contents of the application. Section 1.217(d) provides that the Office will provide a complete unredacted copy of the file wrapper and contents of an application for which a redacted copy was submitted under § 1.217 (upon payment of a fee) unless the applicant complies with the requirements of § 1.217(d). Since the processing required to provide redacted copies of the application content is the result of an applicant choosing to submit a redacted copy under § 1.217, it is appropriate to require the applicant to timely provide appropriate redacted copies of Office correspondence and applicant submissions, and to pay a processing fee for the special handling required for these papers, should the applicant wish to maintain the redacted portions of the application in confidence prior to the grant of a patent.

Section 1.217(d)(1) provides that the applicant must accompany the submission required by § 1.217(c) with: (1) A copy of any Office correspondence previously received by applicant including any desired redactions, and a second copy of all Office correspondence previously received by applicant showing the redacted material in brackets; and (2) a copy of each submission previously filed by the applicant including any desired redactions, and a second copy of each submission previously filed by the applicant showing the redacted material in brackets. Section 1.217(d)(2) provides that the applicant must also: (1) Within one month of the date of mailing of any correspondence from the Office, file a copy of such Office correspondence including any desired redactions, and a second copy of such Office correspondence showing the redacted material in brackets; and (2) with each submission by the applicant, include a copy of such submission including any desired redactions, and a second copy of such submission showing the redacted material in brackets. Section 1.217(d)(3) provides that each submission under § 1.217(d)(1) or § 1.217(d)(2) must also be accompanied by the processing fee set forth in § 1.17(i) and a certification that the redactions are limited to the elimination of material that is relevant only to the part or description of the invention that is not contained in the redacted copy of the application submitted for publication. If the applicant fails to comply with these requirements, the Office will provide a complete unredacted copy of the file wrapper and contents of the application to any member of the public (upon payment of a fee).

Section 1.217(e) provides that the certificate of mailing or transmission procedures set forth in provisions of § 1.8 do not apply to the time periods set forth in § 1.217.

Section 1.219: Section 1.219 implements the provisions of 35 U.S.C. 122(b)(1) that authorize (but do not require) the Office to publish earlier than at the eighteen-month period set forth in 35 U.S.C. 122(b)(1) at the request of the applicant. Section 1.219 provides that any request for early publication must be accompanied by the publication fee set forth in § 1.18(d). Section 1.219 provides that if the applicant does not submit a copy of the application in compliance with the Office EFS requirements, the Office will publish the application based upon the application records in the Office's PACR database (as provided in § 1.215(a)). Section 1.219 also provides that no consideration will be given to requests for publication on a certain date (which includes a request that certain applications be published on the same date), and such requests will be treated as a request for publication as soon as possible.

Section 1.221: Section 1.221 provides for voluntary publication of applications filed before, but pending on, November 29, 2000, and for requests for republication of applications previously published under § 1.211. Applicants may request republication of an application under § 1.221 to obtain a patent application publication that: (1) Corrects immaterial errors or errors not the result of Office mistake; or (2) reflects the application as amended during prosecution of the application.

Section 1.221(a) provides that a request for voluntary publication or republication must include a copy of the application in compliance with the Office EFS requirements and be accompanied by the publication fee set forth in § 1.18(d) and the processing fee set forth in § 1.17(i).

Voluntary publication or republication of applications is not mandated by 35 U.S.C. 122(b)(1). Thus, if a request for voluntary publication or republication does not comply with the requirements of § 1.221, or the copy of the application does not comply with the Office EFS requirements, the Office will not publish the application based upon the application records in the Office's PACR database (as provided in § 1.215(a)). Rather, the Office will simply not publish the application and will refund the publication fee (but not the processing fee).

Section 1.221(b) provides that the Office will grant a request for a corrected or revised patent application publication other than as provided in § 1.221(a) only when the Office makes a material mistake which is apparent from Office records. The phrase ''material mistake'' means a mistake that affects the public's ability to appreciate the technical disclosure of the patent application publication or determine the scope of the provisional rights that an applicant may seek to enforce upon issuance of a patent (*e.g.,* error in the claims, serious error in a portion of the written description or drawings that is necessary to support the claims). The Office will permit applicants to review the bibliographic information contained in the Office's PALM database via its PAIR system. Therefore, applicants are expected to review that information and bring errors to the Office's attention at least fourteen weeks before the projected date of publication. Section 1.221(b) also provides that any request for a corrected or revised patent application publication other than as provided in § 1.221(a) must be filed within two months from the date of the patent application publication, and that this period is not extendable.

Section 1.291: Section 1.291(a)(1) implements the provisions of 35 U.S.C. 122(c), which specify that the Office shall establish appropriate procedures to ensure that no protest or other form of pre-issuance opposition to the grant of a patent may be initiated after publication of the application without the applicant's express written consent. Section 1.291 is amended to provide that a protest must be submitted prior to the date the application was published or the mailing of a notice of allowance under § 1.311, whichever occurs first.

Section 1.292: Section 1.292(b)(3) is amended to require that any petition to institute a public use proceeding be submitted prior to the date the application was published or mailing of a notice of allowance under § 1.311, whichever occurs first.

Section 1.311: Section 1.311(a) is amended to provide that the sum specified in the notice of allowance may (in addition to the issue fee) also include the publication fee, in which case the issue fee and publication fee (§ 1.211(f)) must both be paid within three months from the date of mailing of the notice of allowance to avoid abandonment of the application. Section 1.311(a) is also amended to provide that this three-month period is not extendable. Section 1.311(b) is amended to provide that an authorization to charge any of the post-allowance fees set forth in § 1.18 to a deposit account may be filed in an individual application only after mailing of the notice of allowance.

Section 1.417: Section 1.417 is added to provide for the submission of international publications or English language translations of international applications pursuant to 35 U.S.C. 154(d)(4). This section sets forth the requirements for the filing of an English language international publication or translation of an international application in order to ensure proper handling by the Office. Section 1.417 provides that such a submission must clearly identify the international application to which it pertains under § 1.5(a), and unless it is being submitted pursuant to § 1.494 or § 1.495, must be clearly identified as a submission pursuant to 35 U.S.C. 154(d)(4). Failure to properly identify such submissions will result in the English language international publication or translation of the international application being processed as the filing of a national application under 35 U.S.C. 111(a). Additionally, failure to properly identify the international publication or translation as a submission under 35 U.S.C. 154(d)(4) may cause the Office to be unable to properly track or retrieve the international publication or translation in relation to its international application number. Section 1.417 also provides that such submissions should be marked ''Box PCT.''

The submission of an international publication or translation of an international application for the purposes of national stage entry in accordance with § 1.494 or § 1.495 may also be relied upon as the submission for the purposes of 35 U.S.C. 154(d)(4). Likewise, an earlier filed international publication or translation (submitted for the purposes of 35 U.S.C. 154(d)(4) and properly identified as such) may also be relied upon for the purpose of satisfying the requirement of 35 U.S.C. 371(c)(2). If applicant intends to rely on such an earlier filed international publication or translation, the submission of documents under § 1.494(f) and § 1.495(g) should include an indication that the international publication or translation has been previously submitted for the purposes of 35 U.S.C. 154(d)(4) to avoid the mailing of either a Notice of Abandonment (PCT/DO/EO/909) indicating that a copy of the international application was not timely filed, or a Notice of Missing Requirements (PCT/DO/EO/905) indicating that a translation of the international application is required. While (as discussed above) applicants may rely on an earlier filed international publication or translation for the purposes of national stage entry and processing, the Office strongly recommends that a second copy of the international publication or translation be included with the initial national stage papers in order to ensure the integrity of the first submitted international publication or translation. Otherwise, processing of the national stage application may result in the alteration of the originally filed international publication or translation through, *e.g.,* the entry of amendments.

Section 1.494: Section 1.494(f) is amended to exempt a copy of the international publication or translation of the international application identified as provided in § 1.417 from the documents that must be clearly identified as a submission to enter the national stage under 35 U.S.C. 371 to avoid being considered a submission under 35 U.S.C. 111(a).

Section 1.495: Section 1.495(g) is amended to exempt a copy of the international publication or translation of the international application identified as provided in § 1.417 from the documents that must be clearly identified as a submission to enter the national stage under 35 U.S.C. 371 to avoid being considered a submission under 35 U.S.C. 111(a).

Part 5:

Section 5.1: Section 5.1(e) is amended to implement the provisions of 35 U.S.C. 122(d), which specify that the application will not be published under 35 U.S.C. 122(b)(1) if publication or disclosure of the application would be detrimental to national security. Section 5.1(e) provides that an application under national security review will not be published at least until six months from its filing date or three months from the date the application was referred to a defense agency, whichever is later. These are the current national security review screening time frames for foreign filing license purposes. Section 5.1(e) also provides that a national security classified patent application will not be published under § 1.211 of this chapter or allowed under § 1.311 of this chapter until the application is declassified and any secrecy order under § 5.2(a) has been rescinded.

Response to Comments

The Office received twenty-one written comments (from Intellectual Property Organizations, Businesses, Law Firms, Patent Practitioners, and others) in response to the notice of proposed rulemaking. Comments generally in support of a change are not discussed. The comments and the Office's

responses to the remaining comments follow:

Comment 1: One comment questioned whether the Office will withdraw its reservation under PCT Article 64(3), which provides for no publication of an international application at eighteen months if only the United States is designated. The comment also questioned whether the Office will revise its declaration under PCT Article 64(4)(c) in view of the amendment to 35 U.S.C. 102(e).

Response: The Office's reservation under PCT Article 64(3) and declaration under PCT Article 64(4)(c) are not germane to the proposed changes to the rules of practice to implement the eighteen-month publication provisions of the American Inventors Protection Act of 1999. The Office will make the appropriate revisions to its reservation under PCT Article 64(3) and declaration under PCT Article 64(4)(c) in due course.

Comment 2: One comment questioned whether a published English language international application designating the United States is considered a published application under § 1.9(b).

Response: An English language international application designating the United States and published under PCT Article 21(2) is not an application for patent which has been published under 35 U.S.C. 122(b). Thus, a published English language international application designating the United States is not considered a published application for purposes of § 1.9(b).

Comment 3: One comment suggested that the Office should not provide copies of the file wrapper and contents of published applications because 35 U.S.C. 122(b) allows for publishing an application, but not disclosing the entire content of an application file.

Response: 35 U.S.C. 122(b) provides that ''[n]o information concerning published patent applications shall be made available to the public except as the Director determines,'' and that ''[n]otwithstanding any other provision of law, a determination by the Director to release or not to release information concerning a published patent application shall be final and nonreviewable.'' *See* 35 U.S.C. 122(b)(1)(B) and (C). Therefore, the Office has the authority to disclose, or refuse to disclose, information contained in the file wrapper contents of a published application as the Office deems appropriate.

Comment 4: Several comments suggested that the Office should not provide copies of the file wrapper and contents of pending applications at all or until such time as the Office can produce such a copy from an electronic copy (rather than the physical application file). The comments argue that removing the application file wrapper for copying will result in disruption of the examination process and the loss or corruption of a number of application files.

Response: The Office is cognizant of the fact that providing copies of the file wrapper and contents of a pending published application to any member of the public on request (and payment of a fee) has the potential to disrupt the examination process or result in corruption of the application file. If fulfilling copy orders for the file wrapper and contents of pending published applications proves to be unmanageable, the Office will revise § 1.14 to require a member of the public requesting a copy of the file wrapper and contents of a pending published application to show cause to obtain such a copy.

Comment 5: One comment suggested that § 1.14(b)(2) should be limited to those international applications that designate the United States.

Response: The suggested revision has not been adopted. For some time, the Office has revealed status information for any U.S. application identified in any published patent document, regardless of whether the document is a foreign patent (*e.g.*, a Japanese patent or a German patent) or an international application. The only change intended by § 1.14(b)(2) is to make the meaning of ''published patent document'' more clear by adding the parenthetical expression ''*e.g.*, a U.S. patent, a U.S. patent application publication, or an international application publication.''

Comment 6: One comment contained a number of suggestions and questions on § 1.14(i): (1) PCT Article 38 does not give the Office the authority to provide access to the examination and search files of a PCT application as provided in § 1.14(i)(1); (2) how the public would know that an English translation has been filed (§ 1.14(i)(2)); (3) whether § 1.14(i)(3) requires that the applicant have entered the national stage under 35 U.S.C. 371 (and what file would be available if no United States file wrapper has been prepared); and (4) § 1.14(i)(5) appears to be in conflict with § 1.14(i)(1)(iii).

Response: Article 38 prohibits direct access to the examination file of an international application by a third party. Section 1.14(i)(1) concerns the situation in which the United States acted as the International Preliminary Examining Authority (IPEA), the United States was elected, and the International Preliminary Examination Report (IPER) has issued. PCT Rule 94 provides authority for the Office to provide copies in these situations. PCT Rule 94.2 provides that after issuance of the IPER, the IPEA shall provide copies of the examination file (or any part thereof) to the elected offices upon request, and Rule 94.3 allows the elected offices to provide access to any document in its files. Therefore, upon receipt of a request under § 1.14(i)(1) by a third party for a copy of an examination file in an international application that satisfies the requirements of § 1.14(i)(1)(iii), the United States Elected Office will request that the United States IPEA make a copy of its examination file, and the United States Elected Office will then provide a copy of such file to the requesting party.

The Office will not provide general notification to the public of the filing of translations under 35 U.S.C. 154. Under 35 U.S.C. 154, it is the responsibility of the applicant to notify any possible infringers for the purpose of obtaining provisional rights.

Section 1.14(i)(3) does not require that the applicant have entered the national stage under 35 U.S.C. 371. Section 1.14(i)(3) concerns access to international application home and search files (access to the examination files being prohibited by § 1.14(i)(5)).

Sections 1.14(i)(1)(iii) and 1.14(i)(5) are not in conflict. Section 1.14(i)(1)(iii) concerns the situations in which the United States acted as the International Preliminary Examining Authority (IPEA), the United States was elected, and the International Preliminary Examination Report (IPER) has issued (as discussed above). Section § 1.14(i)(5) concerns direct access to the examination files which is prohibited by PCT Article 38.

Comment 7: One comment suggested that the phrase ''may be provided'' in § 1.14(c)(1), (c)(2), and (e) should be changed to ''will be provided'' for consistency with § 1.13. Another comment suggested that § 1.14(c)(1) and (c)(2) be clarified as to what (the application-as-filed or the entire contents of the file wrapper) may be supplied, and whether the phrase ''may be provided'' is intended to mean that supplying such is optional or discretionary on the part of the Office.

Response: The suggestion has not been adopted. The phrase ''may be'' is used throughout §§ 1.11, 1.12, and 1.14 and is retained in § 1.14 for consistency and because ''may be'' is the appropriate terminology. For example, § 1.14(c)(2) provides that a copy of the specification, drawings, and all papers related to a published patent application may be

provided if a written request with the appropriate fee are filed. The requested copy will normally be provided, but if the file is not available because it is being reviewed by a patent examiner or is at the publishing contractor for printing a patent, the requested copy may be only provided at a delayed date. Furthermore, in the rare event that the file is lost (and a replacement copy cannot be obtained), the requested copy cannot be made and will not be provided.

Comment 8: Several comments suggested that the surcharge for the unintentionally delayed submission of a priority claim was excessive. One comment suggested that this surcharge be a nominal ($5) charge or in line with the publication fee ($300).

Response: If a significant number of unintentionally delayed claims under 35 U.S.C. 119, 120, 121, or 365(a) or (c) are presented, the Office will have difficulty scheduling applications for publication. Thus, the surcharge amount must be sufficient to provide an incentive for applicant to exercise care to ensure that any desired claim under 35 U.S.C. 119, 120, 121, or 365(a) or (c) is timely presented. The proposed surcharge amount tracks the fee amount for a petition to revive an unintentionally abandoned application (35 U.S.C. 41(a)(7)), and this fee amount is considered an appropriate surcharge for a petition to accept an unintentionally delayed claim under 35 U.S.C. 119, 120, 121, or 365(a) or (c). Since the fiscal year 2001 fee amount for a petition to revive an unintentionally abandoned application (35 U.S.C. 41(a)(7)) is $1,240 (§ 1.17(m)), this fee amount ($1,240) is considered an appropriate surcharge for a petition to accept an unintentionally delayed claim under 35 U.S.C. 119, 120, 121, or 365(a) or (c) (§ 1.17(t)).

Comment 9: Several comments suggested that the $300 publication fee was excessive. One comment argued that a publication fee should not be imposed on applicants who do not want publication but do not meet the requirements to request nonpublication under § 1.213. Several comments suggested that the publication fee (cost) be included in the other application (filing or issue) fees. One comment suggested that the publication fee be reduced by fifty percent for small entities. Another comment suggested that § 4506 of the American Inventors Protection Act of 1999 did not authorize the Office to charge a publication fee in those situations in which an application is issued as a patent and subsequently published as a patent application publication.

Response: Section 4506 of the American Inventors Protection Act of 1999 requires the Office to ''recover the cost of early publication required by the amendment [to 35 U.S.C. 122] by charging a separate publication fee.'' Section § 4506 of the American Inventors Protection Act of 1999 does not provide for the Office to: (1) Not charge the publication fee to those applicants who would prefer not to have their applications published under 35 U.S.C. 122(b); (2) build the cost of publication into other application (filing or issue) fees; or (3) apply the small entity discount (which otherwise applies only to fees under 35 U.S.C. 41(a) or (b)) to the publication fee (*cf.* 35 U.S.C. 132(b)). Finally, even when an application is issued as a patent and subsequently published as a patent application publication (because it issues too late in the publication process to stop publication), the cost of such a publication is part of the cost of early publication required by 35 U.S.C. 122(b), and § 4506 of the American Inventors Protection Act of 1999 directs the Office to also recover that cost by charging a separate publication fee.

Comment 10: A comment supporting the changes to §§ 1.52(d) and 1.78(a)(5) concerning the translation requirement for a non-English language provisional application suggested that the Office clarify whether the translation of the provisional application is to be filed in the provisional application or in any nonprovisional application claiming the benefit of the provisional application.

Response: Section 1.78(a)(5) provides that if a provisional application is filed in a language other than English, any nonprovisional application claiming the benefit of the provisional application ''must contain * * * an English language translation of the non-English language provisional application and a statement that the translation is accurate.'' Thus, § 1.78(a)(5) is clear that the English-language translation of the provisional application must be filed in any nonprovisional application claiming the benefit of the provisional application.

Comment 11: One comment questioned whether an applicant can withdraw a priority claim to change the date on which the application will be published, noting that withdrawal of priority claims is provided for in PCT Rule 90*bis*.3.

Response: The Office will recalculate the publication date in response to any change (withdrawal or addition) in priority claims. If this recalculation occurs earlier than nine weeks prior to the previously calculated publication date, the Office will reschedule the application for publication based upon the recalculated publication date. If this recalculation occurs later than nine weeks prior to the previously calculated publication date, the Office will not reschedule the application for publication based upon the recalculated publication date.

Comment 12: One comment requested clarification of the meaning of the term ''original'' in § 1.55.

Response: An ''original'' application is any application other than a reissue application, which includes continuing applications and applications claiming the benefit of a foreign-filed application. See Guidelines Concerning the Implementation of Changes to 35 U.S.C. 102(g) and 103 and the Interpretation of the Term ''Original Application'' in the American Inventors Protection Act of 1999, 1233 Off. Gaz. Pat. Office 54, 56 (Apr. 11, 2000).

Comment 13: One comment suggested that the time periods set forth in §§ 1.55 and 1.78 should not apply to an application in which a nonpublication request under § 1.213 is filed.

Response: A nonpublication request may be rescinded at any time. *See* 35 U.S.C. 122(b)(2)(B)(ii) and § 1.213(b). Thus, the Office must treat an application in which a nonpublication request under § 1.213 is filed the same as other applications for purposes of priority claims as well as review of the patent application drawing and paper (specification) during pre-examination processing of the application.

Comment 14: One comment suggested that the time periods set forth in §§ 1.55 and 1.78 unfairly limit an applicant's ability to delay presenting priority claims until the claim is necessary to avoid the prior art.

Response: An applicant's desire to delay presenting priority claims until the claim is necessary to avoid the prior art is subordinate to the need for the timely presentation of priority claims for publication promptly after eighteen months from the earliest filing date for which a benefit is claimed. The Office previously indicated that eighteen-month publication (if adopted) would require a drastic change in the practice of the presentation of priority claims filed. See General Agreement on Tariffs & Trade/North American Free Trade Agreement Student's Handbook at 6 (question 3), U.S. Patent and Trademark Office (1995).

Comment 15: One comment suggested that the time periods set forth in §§ 1.55 and 1.78 should not apply to the addition of priority claims in the situation in which the application is published within six months of its actual filing date, since the public has

not been harmed by the untimely priority claim.

Response: The Office will not be able to include such untimely priority claims on the patent application publication (and the absence of a priority claim is not considered a ''material mistake'' warranting republication of the patent application publication under § 1.221(b)). Thus, the public will be harmed by such an untimely presentation of a priority claim because the patent application publication will not contain the priority claim.

Comment 16: One comment suggested that if priority claims are not required until the later of four months from the actual filing date or sixteen months from the earliest claimed priority date, a fourteen-week publication cycle would be too long since the public could not rely upon an application being published until twenty months from its earliest claimed priority date.

Response: The Office plans to publish applications on the first Thursday after the date that is eighteen months after the filing date of the application (or if the application claims the benefit of an earlier filing date, the first Thursday after the date that is eighteen months after the earliest filing date for which a benefit is sought). Thus, the Office will schedule applications to begin the publication cycle on the date that is fourteen weeks before that date. If a priority claim under 35 U.S.C. 119, 120, 121, or 365(a) or (c) is filed within fourteen weeks of the date eighteen months after the earliest filing date for which a benefit is sought, the Office will not be able to publish the application on the first Thursday after the date that is eighteen months after the earliest filing date for which a benefit is sought because it requires a fourteen-week cycle to prepare an application for publication in view of the volume of applications to be published and preparation required for the publication.

Comment 17: One comment suggested that the phrase ''or intellectual property authority'' be added after ''country'' in § 1.55(c) for consistency with § 1.55(a)(1)(i).

Response: The parenthetical ''(or intellectual property authority)'' has been added after ''country'' in § 1.55(c) for consistency with § 1.55(a)(1)(i).

Comment 18: One comment suggested that the limitation to ''500 words'' in § 1.72(a) was in conflict with PCT Rule 4.3, which specifies that the ''title of the invention shall be short (preferable from two to seven words when in English or translated into English. * * *''

Response: Section 1.72(a) requires that the title be limited to 500 characters (not words). PCT Rule 4.3 requires that ''title of the invention shall be short,'' and a title that exceeds 500 characters is not short. Therefore, § 1.72(a) does not conflict with PCT Rule 4.3.

Comment 19: One comment suggested that the Office clarify § 1.72(a) to specify what characters can be included in the title of an application.

Response: Section 1.72(a) as adopted does not prohibit non-keyboard character (images) in a title. Section 1.72(a) as adopted, however, provides that characters that cannot be captured and recorded in the Office's automated information systems (*e.g.,* PALM) may not be reflected in the Office's records in such systems or in documents created by the Office. The Office will post the set of characters that are capable of being captured and recorded in PALM on its Internet Web site. The Office will revise the set of characters posted on its Internet Web site as characters are added to this set as a result of improvements to the Office's automated information systems. Applicants are strongly encouraged to restrict the characters in titles to characters in the set of characters indicated as capable of capture and recordation in PALM.

Comment 20: One comment questioned why the Office would use the title of the invention (which does not uniquely identify an application) as the key for associating an EFS copy of an application with the application for which the copy is being submitted.

Response: The Office uses the application number as the primary key for associating an EFS copy of an application with the application for which the copy is being submitted. In view of the number of applications filed each day, it is not practical to use the filing date to verify that the application number is correct (a transposition of the last four digits of the application number will not be revealed when compared to the filing date). The Office may also use other information to verify that the application number correctly indicates the application for which an EFS copy is being submitted.

Comment 21: One comment questioned how the time period provision of § 1.78(a)(2) applied to international applications.

Response: The time period for claiming priority of a prior application in an international application is set forth in the PCT and the Regulations under the PCT.

Comment 22: One comment suggested that the Office clarify whether the requirement in § 1.78(a)(2) that the first sentence of an application indicate whether an international application was published in English applies to international applications filed before November 29, 2000.

Response: The requirement applies to any application filed on or after November 29, 2000, that claims the benefit of a prior international application, regardless of the filing date of the international application for which a benefit is claimed.

Comment 23: One comment suggested that the expression ''[c]olor drawings are not permitted in international applications (see PCT Rule 11.13)'' in § 1.84 is redundant, since the PCT Rule is sufficient authority.

Response: The rules of practice contain a number of provisions that reiterate provisions of the PCT Articles and Regulations, as well as title 35, U.S.C. While such reiterative provisions are (strictly speaking) redundant, they are included in the rules of practice for advisory purposes. If there is a change to the PCT Articles or Regulations (or title 35, U.S.C.), it is likely that the Office's rules of practice will require conforming changes in any event.

Comment 24: One comment questioned whether there will be an Official Gazette publication with a figure when an application issues as a patent.

Response: The Office plans to continue publishing an Official Gazette containing the weekly patent issues with (among other things) a representative drawing figure.

Comment 25: One comment suggested that if the Office considers drawings in compliance with § 1.84 necessary for publication, the Office should reduce the formality requirements of § 1.84.

Response: As discussed above, the Office plans to enforce the requirements of § 1.84 necessary for creating a publication (the patent application publication) containing drawings of sufficient quality for the patent application publication to be routinely used as a prior art document.

Comment 26: One comment suggested that the Office should not require drawings in compliance with § 1.84 until fourteen months from the earliest claimed priority date. Another comment suggested that the Office release applications containing drawings that do not comply with § 1.84 to the Technology Center, flag the PACR record of such applications, and simply add the later-filed drawings in compliance with § 1.84 to the PACR database for publication.

Response: Since the eighteen-month period is not measured from an application's actual filing date, but from the earliest filing date for which a benefit is claimed, many applications will enter the publication cycle before

being transferred from OIPE to the Technology Centers. The Office would need to track which applications have been released to the Technology Center without drawings in compliance with § 1.84 and issue a notice requiring drawings in compliance with § 1.84 during the examination process to ensure that drawings in compliance with § 1.84 are filed before an application is scheduled to enter the publication cycle. Issuing such a notice during the examination process (when the Office is issuing Office actions) would result in confusion (likelihood of two different time periods running simultaneously) and would interfere with the Office's ability to meet the time frames specified in 35 U.S.C. 154(b)(1)(A)(i) and (ii).

Comment 27: Several comments opposed the change to § 1.85 requiring drawings in compliance with § 1.84 before an application will be released to the Technology Center for examination. Several comments argued that this change will increase up-front costs for patent applicants. One comment suggested a two-tiered review: one level for publication and a second level for printing in a patent.

Response: The patent statute no longer defers publication of an application until patent grant. Thus, the Office can no longer permit applicants to defer the submission of publication quality drawings (and the cost of preparing such drawings) until an application is allowed. Since the patent application publication will become the primary prior art and technology dissemination document, there is no point to providing for higher drawing quality in patents than in patent application publications.

Comment 28: Several comments suggested that § 1.98(a)(2)(ii) not require a copy of a cited copending application, especially since the Office has an electronic database containing copies of applications as filed. Another comment also argued that this provision in combination with § 1.14(c)(2) will allow third parties to obtain a copy of any cited copending application causing: (1) The cited application to become a publication that may bar the filing of the cited application in foreign countries; (2) the disclosure of trade secrets from the cited application (which may have been abandoned prior to its scheduled publication date); and (3) an increase in paper submissions to the Office.

Response: The Office proposed amending § 1.98(a)(2)(ii) to require a copy of any cited copending application in a rulemaking to implement the Patent Business Goals. See Changes to Implement the Patent Business Goals, 64 FR at 53833, 1228 Off. Gaz. Pat. Office at 18. The comments on this proposed change to § 1.98 are addressed in the final rule to implement the Patent Business Goals.

Comment 29: One comment questioned whether § 1.99 is consistent with the requirements of 35 U.S.C. 122(c) (which instruct the Office to ensure that no protest or opposition be initiated after publication without the express written consent of the applicant), and suggested that the Office not adopt this proposed rule.

Response: 35 U.S.C. 122(c) provides that the Office ''shall establish appropriate procedures to ensure that no protest or other form of pre-issuance opposition to the grant of a patent on an application may be initiated after publication of the application without the express written consent of the applicant.'' A submission under § 1.99, however, is different from either an ''opposition'' proceeding or a ''protest'' that would fall under the provisions of 35 U.S.C. 122(c).

Unlike a third-party submission of patents and publications under § 1.99, an opposition is a very complex, *inter partes* proceeding. Examples of oppositions include trademark oppositions and foreign patent office oppositions.

Trademark oppositions, conducted before the Trademark Trial and Appeal Board, are full adversarial proceedings similar to a trial, complete with pleadings, notice, discovery, stipulations, motions, briefs, evidence, and opportunity for oral argument. A trademark opposition proceeding is governed by the Federal Rules of Civil Procedure, except as otherwise provided. 37 CFR 2.101 through 2.107 and 2.116 through 2.136, sections 1503 through 1503.05 of the Trademark Manual of Examining Procedure, and Chapters 300 through 800 of the Trademark Trial And Appeal Board Manual of Procedure set forth an overview of the complex nature of trademark opposition proceedings. In view of the similarity to an *inter partes* civil proceeding, it is clear that trademark oppositions are much different in character compared to a third-party submission of patents and publications under § 1.99 (which bars a third party from even filing a paper arguing against the patentability of an application).

Similar to the Office's trademark opposition procedure, oppositions in patent cases in both the Japanese Patent Office (JPO) and the European Patent Office (EPO) are lengthy *inter partes* proceedings in which a third party has extensive participation in challenging the grant of a patent. Both the EPO and the JPO allow for evidence, multiple briefs, an oral hearing, and appeals, and the procedures to be followed are very technical and complex. *See* Chapter 66 (Patent Opposition System) of the JPO's Manual of Appeal and Trial Proceedings; *see also* Part D Opposition Procedure of Guidelines for Examination in the European Patent Office.

Likewise, a third-party submission of patents and publications under § 1.99 is not a ''protest.'' As generally understood, a protest is ''a complaint, objection, or display of unwillingness usually to an idea or course of action.'' *See* Merriam Webster's Collegiate Dictionary (1993). Under that commonly understood meaning, a third-party submission of patents and publications under § 1.99 does not rise to the level of a protest because § 1.99 does not permit the filing of any complaint or objection. No form of adversarial argument is allowed under § 1.99. Instead, a third party is limited to merely submitting prior art without any corresponding commentary.

The Office does have an existing regulation (§ 1.291) entitled: ''Protests by the public against pending applications.'' Under § 1.291, a member of the public may file a protest in a pending application, which protest comprises: (1) A list of the prior art references or other information relied upon; (2) an explanation of the relevance of each listed item; (3) a copy of each listed item; and (4) an English translation of each item, if necessary. *See* § 1.291(b). In direct contrast to a protest under § 1.291, however, § 1.99 does not permit the third party to transmit any commentary or adversarial arguments objecting to a patent application. Rather, § 1.99 is structured so as to avoid compromising the objectivity of the *ex parte* character of the examination process.

Only patents and publications (*i.e.*, prior art documents that are public information that are theoretically available to the examiner and which the Office would discover on its own in an ideal world) may be supplied to the examiner in a submission under § 1.99. As such, the bare submission of patents and publications is not a protest any more than the submission of an information disclosure statement under §§ 1.97 and 1.98 by the patent applicant is a ''protest.'' In addition, patents and publications may be submitted for various reasons: Individuals may wish to submit patents or publications to help the examiner understand the technology or the appropriate field of search. Therefore, third-party submission of

patents and publications under § 1.99 is qualitatively different from a protest under § 1.291.

Title 35, U.S.C., provides that the Office may issue a patent only if it appears that the applicant is entitled to a patent in view of the prior art (35 U.S.C. 102 and 103). 35 U.S.C. 122(c) does not disqualify prior art simply because that prior art came to the attention of the Office through a third party. Thus, the Office interprets ''protest or opposition'' in 35 U.S.C. 122(c) to mean that the Office is to ensure that no third party is given the ability (or right) to have input on the examination of the application after publication and argue against the application's patentability. Section 1.99 simply sets forth a procedure under which a third party can bring prior art relevant to a published application to the attention of the Office. As an important safeguard for the rights of the applicant, it does not give the third party the ability or right to participate in the examination of the application as a result of such prior art being brought to the attention of the Office. Accordingly, § 1.99 will improve the quality of examination and at the same time will ensure that no third parties enter written, adversarial arguments, thereby coloring the *ex parte* process.

Comment 30: One comment suggested that the limitations in § 1.99 do not adequately protect the applicant from misuse of eighteen-month publication by third parties because third parties may submit information directly to the applicant (or the applicant's representative), who in turn may be obligated under § 1.56 to disclose the information to the Office. The comment suggested amending § 1.56 to exempt persons associated with an application from considering information received from a third party.

Response: The Office did not propose changes to the provisions of § 1.56. Given the *ex parte* nature of the examination of an application for patent, the obligations placed on an applicant under § 1.56 are paramount to that examination. Therefore, the Office considers it inappropriate to alter the provisions of § 1.56 simply because eighteen-month publication may result in prior art being brought to an applicant's attention at an inopportune point in the examination process.

Comment 31: Several comments suggested that § 1.99 be amended to permit third parties to provide explanations as to the relevant parts of the patents or publications, since such explanations may be necessary in the case of a complex or voluminous patent or publication. Another comment suggested that since § 1.99(b)(4) permits translations of the necessary and pertinent parts of non-English language publications, § 1.99 should permit markings on the necessary and pertinent parts of English language publications. Another comment also suggested that examiners should be required to consider patents and publications submitted in compliance with § 1.99.

Response: To ensure that a third-party submission under § 1.99 does not amount to a protest or other opposition, the Office cannot permit the third party to either: (1) Provide explanations (*e.g.*, as to how the patents or publications render the claims unpatentable) with the patents and publications; or (2) have the right to insist that the Office ''consider'' any of the patents or publications submitted. The third party, however, may submit redacted versions of a patent or publication containing only the most relevant portions of the patent or publication.

Comment 32: One comment suggested that the rules of practice should encourage third parties to submit prior art to the Office (especially the computer software and business methods areas), and that the $180 fee (§ 1.17(p)) for a third-party submission will be contrary to the public interest by discouraging third parties from submitting prior art. The comment suggested an alternative fee structure based upon the nature of the third party (small entity, non-small entity) or nature of the submission (non-patent publications, number of patents or publications).

Response: 35 U.S.C. 41(d) authorizes the Office to establish fees to recover the estimated average cost of providing services or products not otherwise provided for. The Office has recently lowered the fee set forth in § 1.17(p) to $180, which is set at a fee amount to recover the aggregate costs of handling and reviewing the information (patents and publications) brought to the attention of the Office subsequent to the issuance of a first Office action. Since the nature of the third party (small entity, non-small entity), or nature of the submission (non-patent publications), or nature of the technology of the submission does not impact this cost, 35 U.S.C. 41(d) does not authorize the Office to vary the fee based upon these factors (and § 1.99 places a limit on the number of patents or publications in the submission).

Comment 33: Several comments suggested that § 1.99 include the following provisions to avoid becoming a means for third parties to harass the applicant or disrupt the examination process: (1) Require that the third party provide evidence that it has served the information being submitted on the applicant (rather than expecting the Office to do so); (2) require the third party to declare (under oath or declaration) whether he/she is submitting the information pursuant to an agency relationship (and, if so, to identify the real party in interest); and (3) permit the third party to submit only five (rather than twenty) patents or publications and to screen the information to eliminate patents or publications that have already been cited in the application.

Response: Section 1.99(c) requires that the submission be served on the applicant in compliance with § 1.248. Section 1.248 requires that: (1) Service be made by the third party, not the Office (§ 1.248(a)); and (2) the third party provide evidence that it has served the information being submitted on the applicant (1.248(b)).

Section 1.99 as adopted limits the number of patents and publications in such a submission to ten (rather than twenty). Nevertheless, if a patent or publication is highly probative, it would not be in the third party's interest to include such a patent or publication in a submission containing even ten patents or publications (since the third party cannot provide any explanation with the submission).

The Office considers further restrictions on the number of patents or publications in a submission under § 1.99 to be unnecessary. Since the third party has no ability or right to have input on what will happen during the examination of the application as a result of the submission under § 1.99, the real party in interest is of no concern. Finally, the Office plans (as discussed above) to screen submissions under § 1.99 to determine whether they are limited to patents and publications before the submission is placed in the file of the application and forwarded to the examiner, and to remove any explanations or information (other than patents and publications) from the submission before it is placed in the file of the application and forwarded to the examiner.

Comment 34: One comment also suggested that the Office clarify the condition (*e.g.*, delay was ''unavoidable'') under which patents and printed publications submitted later than two months from the date of publication of the application or prior to the mailing of a notice of allowance (whichever is earlier) will be considered.

Response: A submission under § 1.99 later than the period specified in § 1.99(e) is permitted only when the

patents or publications could not have been submitted to the Office earlier (*e.g.*, an amendment submitted in the published application after publication changes the scope of the claims to an extent that could not reasonably have been anticipated by a person reviewing the published application during the period specified in § 1.99(e)).

Comment 35: One comment suggested that third parties should be given three (rather than two) months from the date of publication of the application or prior to the mailing of a notice of allowance, whichever is later (rather than whichever is earlier) to submit patents or publications under § 1.99.

Response: The time period in § 1.99 balances the desirability of considering the best prior art during examination of an application with the need to avoid undue interference with the examination of the application. The Office considers a time period of two months from the date of publication of the application or prior to the mailing of a notice of allowance, whichever is earlier, as striking a better balance between these interests.

Comment 36: One comment questioned how the time period specified in § 1.99(e) would apply to an international application.

Response: The submission must be filed within two months of the publication of the application under 35 U.S.C. 122(b), and not the IB publication, or prior to the mailing of a notice of allowance, whichever is earlier.

Comment 37: One comment contained a number of questions and suggestions concerning § 1.130: (1) § 1.130 does not address the change to 35 U.S.C. 103(c) in § 4807 of the American Inventors Protection Act of 1999 and has a confusing heading; (2) the requirement for an oath or declaration that ''the application or patent under reexamination and patent or published application are currently owned by the same party'' is confusingly written; (3) it is not clear who must make the required oath or declaration under § 1.130(a)(2); and (4) it is not clear why such an oath or declaration is necessary since this information is available in the terminal disclaimer and assignments.

Response: Section 1.130 was adopted in September of 1996 to address those situations in which: (1) The rejection in an application or patent under reexamination to be overcome is a rejection under 35 U.S.C. 103 in view of a U.S. patent which is not prior art under 35 U.S.C. 102(b); (2) the inventions defined by the claims in the application or patent under reexamination and by the claims in the U.S. patent are not identical but are not patentably distinct; and (3) the inventions are owned by the same party. *See MPEP* 718; *see also Miscellaneous Changes in Patent Practice,* 61 FR at 42795, 1190 *Off. Gaz. Pat. Office* at 71. Section 1.130 does not address the change to 35 U.S.C. 103(c) in § 4807 of the American Inventors Protection Act of 1999 (and appears to have a confusing heading) because § 1.130 is not directed to implementing the provisions of 35 U.S.C. 103(c).

The phrase ''application or patent under reexamination and patent or published application'' is designed to cover four situations: (1) The rejection of a claim in an application on the basis of a commonly assigned patent; (2) the rejection of a claim in an application on the basis of a commonly assigned published application; (3) the rejection of a claim in a patent under reexamination on the basis of a commonly assigned patent; and (4) the rejection of a claim in a patent under reexamination on the basis of a commonly assigned published application.

The oath or declaration under § 1.130(a)(2) may be signed by the inventor(s), a registered practitioner of record, or the assignee of the entire interest. *See MPEP* 718.

Section 1.130 requires such an oath or declaration because the assignee information in the terminal disclaimer or recorded assignments may not be current, and the applicant is in the best position to verify that the application or patent under reexamination and patent or published application are currently owned by the same party.

Comment 38: One comment suggested that the second sentence of § 1.131 is unnecessary and inappropriately omits any reference to 35 U.S.C. 102(a), and that the phrase ''by reference to acts'' appears to have been inadvertently omitted in the subsequent two sentences.

Response: The second sentence of § 1.131(a) provides that the effective date of a U.S. patent, U.S. patent application publication, or international application publication under PCT Article 21(2) is the earlier of its publication date or the date that it is effective as a reference under 35 U.S.C. 102(e). While the second sentence of § 1.131 is technically unnecessary, it serves as a reminder that the effective date of a U.S. patent, U.S. patent application publication, or international application publication under PCT Article 21(2), for prior art purposes, may be earlier than its publication date (*i.e.,* its effective date under 35 U.S.C. 102(a)). In addition, the phrase ''by reference to acts'' has not been omitted in the subsequent two sentences of § 1.131. *See* § 1.131(a)(2)(1995)–(2000).

Comment 39: One comment suggested that § 1.132 be revised to permit an oath or declaration under § 1.132 to traverse a rejection even if the rejection is based upon a patent or application to another that claims the same patentable invention. Another comment suggested that § 1.132 be revised to permit an oath or declaration under § 1.132 to traverse a rejection even if the rejection is based upon a published application to another that claims the same patentable invention.

Response: Section 1.132 as adopted provides that when any claim of an application or a patent under reexamination is rejected or objected to, any evidence submitted to traverse the rejection or objection on a basis not otherwise provided for must be by way of an oath or declaration under § 1.132.

Comment 40: One comment suggested that the reference in § 1.137(d)(2) requiring that a terminal disclaimer also apply to utility or plant applications filed after June 8, 1995, is unnecessary.

Response: Section 1.137(d)(2) as adopted provides that such a terminal disclaimer also apply to utility or plant applications filed before (not after) June 8, 1995.

Comment 41: One comment suggested that the requirement for a terminal disclaimer in an application abandoned due to the applicant's failure to timely notify the Office of a foreign filing was unfair because such abandonment will not delay prosecution of the application.

Response: Section 1.137(d) does not require a terminal disclaimer for a utility or plant application filed on or after June 8, 1995, and the eighteen-month publication provisions of the American Inventors Protection Act of 1999 apply only to utility or plant applications filed on or after November 29, 2000.

Comment 42: One comment suggested that the provisions of § 1.137(f) should include punitive measures to avoid frivolous or fraudulent nonpublication requests, since an applicant should make a nonpublication request only when positive that an application will not be filed in a foreign country, and would be seriously negligent to intentionally make such a nonpublication request, subsequently file in a foreign country, and then fail to satisfy his or her obligation to timely notify the Office that a corresponding application has been filed in a foreign country. The comment suggested similar treatment for applications for which a redacted copy was submitted for publication, and the redacted copy

improperly omitted portions of the application.

Response: Since an applicant would have to be ''seriously negligent'' to submit a nonpublication request on filing, subsequently file a corresponding application in a foreign country, and then unintentionally fail to timely notify the Office that a corresponding application has been filed in a foreign country, the Office expects few petitions to revive an application under the provisions of § 1.137(f). If an applicant intentionally (or fraudulently) delays notifying the Office that a corresponding application has been filed in a foreign country, the applicant cannot revive the application under § 1.137 (or if revival is obtained on the basis of improper statements, such revival will not likely survive court review during any attempt to enforce the patent). An applicant who intentionally submits an improperly redacted copy of an application for publication is not dealing with the Office consistent with the duty of candor and good faith (§ 1.56), and will likely meet a similar fate when attempting to enforce any patent resulting from the application.

Comment 43: One comment suggested that the language of § 1.137(g) does not take into account the amendment to 35 U.S.C. 119(e) in § 4801(b) of the American Inventors Protection Act of 1999.

Response: Section 1.137(g) contains the phrase ''[s]ubject to the provisions of 35 U.S.C. 119(e)(3) and § 1.7(b),'' to take into account the amendment to 35 U.S.C. 119(e) in § 4801(b) of the American Inventors Protection Act of 1999.

Comment 44: One comment suggested that the Office create a special box to which an express abandonment being made to avoid publication are to be mailed to allow ''last minute'' express abandonments to achieve their goal of avoiding publication.

Response: Petitions under § 1.138 should be addressed to: Box PGPUB–ABN. While addressing a petition under § 1.138 to Box PGPUB–ABN will increase the chances of such petition being received by the appropriate officials in sufficient time to avoid publication of an application, it is unlikely that a petition under § 1.138 filed within four weeks of the projected date of publication will be effective to avoid publication under any circumstance. Thus, applicants should not rely upon Box PGPUB–ABN as permitting ''last minute'' express abandonments to achieve their goal of avoiding publication.

Comment 45: One comment suggested that eighteen-month publication will benefit only large companies since small corporations and independent inventors rely upon their applications being maintained in confidence, and that eighteen-month publication does not promote the useful arts and sciences as to small corporations and independent inventors who rely upon their applications being maintained in confidence. Another comment suggested that eighteen-month publication will benefit only large companies to the detriment of small corporations and independent inventors, and a patent application should be maintained in confidence until a patent is granted.

Response: The proposed changes to the rules of practice concern how (and not whether) the Office will implement the eighteen-month publication provisions of the American Inventors Protection Act of 1999. In any event, the eighteen-month publication provisions of the American Inventors Protection Act of 1999 permit small corporations and independent inventors (or any applicant) who do not file counterpart foreign or international applications (which are subject to eighteen-month publication) to ''opt-out'' of eighteen-month publication (§ 1.213), and provide provisional rights protection (35 U.S.C. 154(d)) to those who do not or cannot ''opt-out'' of eighteen-month publication.

Comment 46: One comment suggested that the eighteen-month period for publication of an application should not include a prior application for which the application claims a benefit as a continuation-in-part application.

Response: 35 U.S.C. 122(b) provides for publication at eighteen months ''from the earliest filing date for which a benefit is sought under this title.'' Thus, 35 U.S.C. 122(b) provides that this eighteen-month period is measured from the earliest claimed filing date, whether the benefit of that filing date is claimed as a continuation, divisional, or continuation-in-part application.

Comment 47: Several comments suggested that it is inefficient and inappropriate to (re)publish an international application if the international application has been published by the IB under PCT Article 21 in English. One comment suggested that PCT Article 29 and 35 U.S.C. 374 equate the IB publication of an international application to the publication of the application under 35 U.S.C. 122(b). Another comment suggested that if the Office means to publish an international application even if the international application has been published by the IB under PCT Article 21 in English, the Office should amend § 1.211(a) to explicitly state as much.

Response: The IB publication of an international application will not be included in the Office's patent application publication search database. The Office must (re)publish international applications that entered the national stage to place these applications into its patent application publication search database. The benefit gained by ensuring that these prior art documents will be included in the Office's patent application publication search database outweighs the cost of (re)publishing these applications.

Since § 1.211(a) states that ''each international application in compliance with 35 U.S.C. 371 will be published promptly after the expiration of a period of eighteen months from the earliest filing date for which a benefit is sought under title 35, United States Code.'' No amendment to § 1.211(a) is necessary for it to explicitly state that the Office will publish an international application that is in compliance with 35 U.S.C. 371 (regardless of whether the international application has been published by the IB under PCT Article 21 in English).

Comment 48: One comment suggested that the Office clarify the phrase ''sufficient time'' in § 1.211(a) so that applicants in the same situations will be treated the same.

Response: The Office cannot remove an application from the publication process later than two weeks from the projected date of publication. Thus, the phrase ''sufficient time'' means that the application must issue as a patent at least two weeks before its projected publication date. Section 1.211(a) does not include a specified time frame because improvements in the publication process may permit the Office to remove an application from the publication process later than two weeks from the projected date of publication.

Comment 49: One comment suggested that the burden should be on the Office to determine whether a corresponding application has been filed in a country that requires eighteen-month publication. The comment also suggested that the Office publish only applications that the Office can demonstrate that the application has been or will be filed in a country that requires eighteen-month publication or if the applicant affirmatively requests publication. The comment also suggested that an applicant's failure to timely notify the Office of a foreign filing should not result in abandonment of the application, and that the Office should send reminders of this obligation to those applicants who file a

nonpublication request with their applications.

Response: 35 U.S.C. 122(b)(2)(B)(i) places the burden on the applicant to affirmatively request that an application not be published, and 35 U.S.C. 122(b)(2)(B)(iii) provides that an application is abandoned (by operation of law) if an applicant submits a nonpublication request, subsequently files a corresponding application in a foreign country, and then fails to timely notify the Office that a corresponding application has been filed in a foreign country. 35 U.S.C. 122(b)(2)(B) does not provide for the Office to determine or demonstrate whether a corresponding application has been filed in a foreign country or to issue reminders to applicants who filed a nonpublication request with their applications.

Comment 50: One comment suggested that the certification requirement of § 1.213 is too severe, and that an applicant should be required to certify only that a foreign filing is not contemplated and that the applicant will notify the Office promptly in the event that a foreign filing occurs.

Response: The certification required by § 1.213 tracks the certification required by 35 U.S.C. 122(b)(2)(B)(i) (''the invention disclosed in the application has not and will not be the subject of an application filed in another country, or under a multilateral international agreement, that requires publication of applications 18 months after filing''). The suggested ''less severe'' certification would not be consistent with the certification required by 35 U.S.C. 122(b)(2)(B)(i).

Comment 51: One comment suggested that since submission of a nonpublication request is a serious matter and an application for which a nonpublication request is submitted requires exception handling, the Office should charge a substantial fee for submitting a nonpublication request.

Response: While the submission of a nonpublication request and certification should be considered a ''serious matter'' by applicant, the ''exception processing'' required for an application in which a nonpublication request is submitted is not sufficient to warrant charging a processing fee. The patent statute does not authorize the Office to charge ''a substantial fee'' (or surcharge) simply because of the seriousness of the request and certification.

Comment 52: Several comments requested clarification on whether the Office would grant a foreign filing license in the situation in which an application is filed with a nonpublication request (which must certify that the invention disclosed in the application has not been and will not be the subject of an application filed in another country, or under a multilateral agreement, that requires publication at eighteen months after filing).

Response: The Office will review an application to determine whether it is appropriate to grant a foreign filing license even if the applicant files a nonpublication request with the application because: (1) The applicant may subsequently file the application in a foreign country that requires eighteen-month publication and notify the Office of such filing; and (2) not all foreign countries require eighteen-month publication.

Comment 53: Several comments suggested that § 1.215 also state that the patent application publication include the classification of the patent application.

Response: The Office plans to include the classification on the front page of a patent application publication. The rules of practice do not set forth the particulars of what appears on the front page of a patent. Therefore, it is not necessary for the rules of practice to set forth this or other particulars of what will appear on the front page of a patent application publication.

Comment 54: Several comments suggested that the Office provide a ''transitional publication arrangement'' for applications that are due for publication shortly after they are filed (due to a claim under 35 U.S.C. 120). The comment specifically suggested that applicants should be given some period of time (after the filing date) within which to comply with the requirements for publication before the delay in compliance serves as a basis for a reduction in any patent term adjustment.

Response: The notice of proposed rulemaking sets forth with particularity the Office's planning approach to eighteen-month publication. Therefore, the public has been given over seven months of notice of the requirements an application must meet to be in condition for eighteen-month publication. Since any applicant filing an application on or after November 29, 2000, has been given this notice of the requirements an application must meet to be in condition for eighteen-month publication, the Office is not providing a ''transitional publication arrangement.'' The impact that a delay in compliance with the requirements for publication will have on patent term adjustment is set forth in 35 U.S.C. 154(b)(2)(C)(ii) and § 1.704(b).

Comment 55: Several comments suggested that the Office's reliance upon its electronic filing system (EFS) for submission of copies (redacted, as-amended, or for voluntary publication) of an application for publication purposes jeopardizes the optional publication procedures. The comments specifically suggested that: (1) The Office should not mandate the filing of a copy of an application for publication purposes by EFS until the Office has demonstrated that EFS is fully functional; (2) applicants' experience with the Office's pilot EFS program has been plagued with extra costs and information system problems; (3) an EFS submission requirement effectively excludes the small inventor community; and (4) the EFS submission requirement effectively deprives most applicants of the right to seek voluntary publication or publication of an application ''as-amended'' by requiring a copy of the previously filed application to be submitted in a particular filing system.

Response: A key objective of any pilot program is to identify improvements that can or should be made to the program. EFS pilot participant experiences have identified such improvements for the EFS software, and the Office has enhanced EFS based upon such experiences. EFS as enhanced will permit applicants to create a copy of the patent application text in a familiar word processing environment with minimal effort. The accuracy and speed resulting from the improvements to the authoring tool (word processing software for creating tagged patent application specification text), and the EFS desktop software (used for the submission of a copy of an application via EFS), will facilitate the timely and efficient publication of applications.

Examples of improvements to be implemented by November of 2000 in the next release of the Patent Application Specification Authoring Tool (PASAT) are: (1) An enhanced Office Assistant function including capability to enable or disable the help option; (2) the addition of keyboard short cuts to facilitate authoring; (3) enhanced editing capabilities to be available, for example, inserting special characters during a ''paste text'' process; (4) the capability to copy and paste tables from an existing word processing document; and (5) an enhanced authoring tool that will support Microsoft Windows 2000 and Word 2000 software.

The Office also plans to have the following improvements in the desktop software (electronic Packaging and Validation Engine (ePAVE)) in place by the fall of 2000: (1) A feature permitting applicants to enter free-form text

(comments) as part of the electronic filing transmittal; (2) providing for the entry of the application information for the application data sheet (§ 1.76); and (3) preview and printing of patent application information before submission.

These new features will be fully tested as part of the software quality assurance component of the Office's system development process for managing software development and deployment. Thus, EFS will be sufficiently enhanced by the fall of 2000 to be relied upon for submission of a copy of an application to the Office under the optional publication provisions of §§ 1.215, 1.217, and 1.221.

Finally, the Office has also conducted a number of workshops concerning its Patent Electronic Business Center (which include filings under EFS) through the Patent and Trademark Depository Libraries (PTDLs). These workshops include a portion specifically directed at independent inventors.

Comment 56: One comment suggested that the Office permit applicants to file paper copies of applications for publication and charge a fee to recover the cost of converting the application into an electronic format.

Response: The suggested approach is impractical in view of the current nature of the Office's budget. The Office cannot spend the fees it collects absent authority from Congress to do so. Recently, Congress has not authorized the Office to spend all of the fees it collects; rather, Congress has authorized the Office to spend up to only a certain amount of the fees it collects and diverted the remaining fees to other programs. Thus, even if the Office collects the suggested fee (ostensibly to recover the Office's cost of converting the application into an electronic format), such fees would likely be diverted from the Office leaving the Office with no funding to actually recover the Office's cost of converting the application into an electronic format.

Comment 57: One comment questioned how color drawings, which are still permitted to be filed on paper and are not permitted by EFS, can be submitted via EFS.

Response: Patent application publications will not contain color drawings (if an application is filed with color drawings, the patent application publication will include only a black-and-white copy of the color drawings). Therefore, it is unnecessary to provide for color drawings to be submitted by EFS for publication purposes.

Comment 58: One comment questioned how a continued prosecution application (CPA) under § 1.53(d) would be published as a patent application publication, and suggested that the Office use the claims as filed in a CPA as they existed at the termination of prosecution (in the prior application) as the basis for the patent application publication due to the provisional rights requirements of 35 U.S.C. 154(d).

Response: The Office has amended § 1.53(d)(1)(i) to provide that the prior application of a CPA (utility or plant) must have been filed prior to May 29, 2000. *See* Changes to Application Examination and Provisional Application Practice, Interim Rule, 65 FR 14865, 14872 (Mar. 20, 2000), 1233 Off. Gaz. Pat. Office 47 (Apr. 11, 2000). This should cause CPA practice (in utility or plant applications) to phase out and limit the instances in which the Office must publish a CPA. The Office plans to create a patent application publication for a CPA under § 1.53(d) using its PACR database or microfilm records. Thus, a patent application publication for a CPA will reflect the prior application (the application originally assigned the application number assigned to the CPA) as filed. For this reason, any applicant filing a CPA under § 1.53(d) on or after November 29, 2000, is advised to also file a copy of the application-as-amended for publication purposes to take full advantage of provisional rights under 35 U.S.C. 154(d).

Comment 59: One comment suggested that the Office clarify the ''separate paper'' requirement for assignee information to be printed on the patent application publication (*e.g.,* whether it can be included on a transmittal letter, whether a separate paper is required for each item of information). Another comment suggested that since it will benefit the public to have assignee information included on the patent application publication, the Office should provide a convenient manner of submitting assignee information for inclusion on the patent application publication. Another comment suggested that the Office set forth a form or format to avoid confusion over the requirements for submitting assignee information for inclusion on the patent application publication.

Response: Section 1.76 has been revised to provide for the inclusion of assignee information on the application data sheet. *See* § 1.76(b)(7). Assignee information is the name (either person or juristic entity) and address of the assignee of the entire right, title, and interest in an application. Section 1.215(b) has been revised to provide that if the applicant wants the patent application publication to include assignee information, the applicant must include the assignee information on the application transmittal sheet or the application data sheet (§ 1.76).

Comment 60: One comment suggested that the Office print the assignment information contained in its assignment records on patent application publications, rather than relying upon or expecting applicants to provide this information on a separate paper.

Response: The Office does not require that appropriate assignee information be printed on a patent and does not plan to require that appropriate assignee information be printed on a patent application publication. Therefore, the Office plans to simply print such assignee information as is provided by an applicant, rather than automatically include assignee information from its assignment records on a patent application publication.

Comment 61: One comment suggested that applicants should receive confirmation of a nonpublication request on the filing receipt. The comment also suggested that if the publication date is changed at all (and not just by more than two weeks), the applicants should be notified of the new publication date.

Response: If a nonpublication request is filed with an application, the filing receipt for the application will indicate ''No Publication'' to confirm receipt of the nonpublication request to the applicant. If the application has not yet entered the fourteen-week publication cycle, the applicant will be notified of any changes in the publication date. If the application has entered the fourteen-week publication cycle, the applicant will only be notified of changes in the publication date if the publication date is changed by more than two weeks.

Comment 62: One comment suggested that the Office should place paper copies of patent application publications in the Public Search Room and in the examiners' search rooms.

Response: The Office has considered placing paper copies of patent application publications in the Public Search Room and in the examiners' search rooms. The Office, however, is migrating to a fully electronic search and the investment necessary to create and maintain both electronic and paper collections of patent application publications is not feasible.

Comment 63: One comment suggested that the Office should place its weekly volumes of patent application publications on its Internet Web site so that they are as readily available as issued U.S. patents.

Response: The Office plans to place its weekly volumes of patent application publications (both image and text-searchable) on its Internet Web site.

Comment 64: A number of comments opposed the publication of only a redacted copy of an application (rather than the entire application). One comment questioned whether a redacted copy of an application satisfied the ''actual notice'' requirement of 35 U.S.C. 154(d).

Response: The filing of a redacted copy of an application for publication is provided for in 35 U.S.C. 122(b)(2)(B)(v). Whether publication of a redacted copy of an application will satisfy the provisional rights requirements of 35 U.S.C. 154(d) will depend upon the particulars of the situations. Any applicant seeking provisional rights requirements of 35 U.S.C. 154(d) but planning to file a redacted copy of an application for publication should carefully consider the provisions of the last sentence of 35 U.S.C. 122(b)(2)(B)(v).

Comment 65: Several comments suggested that the requirements (*e.g.,* use of EFS, multiple copies of submissions and Office actions, bracketed copy of application showing redactions, and copies and translations of foreign applications) for a redacted copy of an application for publication, are so onerous they frustrate the purpose of the statute. The comments suggested that the Office should not require that a redacted copy of an application submitted for publication purposes be filed by EFS. One comment also suggested that the Office should treat applications for which a redacted copy is submitted for publication the same as other applications.

Response: The Office is requiring a copy of the application showing redactions in brackets and copies and translations of foreign counterpart applications so that the applicant will compare the application as redacted to the foreign counterpart applications to ensure that any redaction is appropriate. This will help to avoid the situation in which an applicant inadvertently redacts material that was in fact contained in a foreign counterpart application. The Office requires multiple copies of submissions and Office actions so that the Office will have an appropriately redacted copy of the application that can be provided when the Office needs to provide a member of the public with such a copy. The Office requires EFS submission of a redacted copy of an application for publication because the Office must have the copy submitted via the most efficient means available (EFS) since the application will already be in the publication cycle by sixteen months from the earliest priority date. The Office does not treat applications for which a redacted copy is submitted for publication in the same manner as other applications because the filing of a redacted copy of an application for publication (unlike other applications) places a significant burden on the Office.

Comment 66: One comment suggested that it was not clear how to indicate the portion of the redacted contents of an application for which a redacted copy is submitted for publication.

Response: The redacted copy of the application being submitted for publication should simply not include the portions that have been redacted. The ''marked up'' copy of the application showing the redaction that is submitted for the application file should show the portions that have been redacted in brackets.

Comment 67: One comment suggested that since maintaining the file of an application for which a redacted copy of the application was submitted for publication in a partially published/partially unpublished condition requires exception handling, these applicants should be charged a significant fee ($500) and not just the $130 processing fee set forth in § 1.17(i).

Response: As indicated above, filing a redacted copy of an application for publication and maintaining a set of redacted papers in the application does place a significant burden on the Office. The $130 processing fee set forth in § 1.17(i), which must accompany each submission under § 1.17(d)(1) or § 1.17(d)(2) (§ 1.17(d)(3)) is considered an appropriate fee for this special handling.

Comment 68: One comment suggested that the certificate of mailing provisions of § 1.8 should apply to the filing of materials relating to submission of a redacted copy of an application for publication (§ 1.217).

Response: Since the redacted copy of an application for publication must be submitted via EFS (and not via the mail), the certificate of mailing practice set forth in § 1.8 is inapplicable to the submission of a redacted copy of an application for publication. In view of the significant burden that filing a redacted copy of an application for publication places on the Office, the Office considers it appropriate to require such an applicant to provide the Office with the document necessary for processing the application by means that ensure that such documents are promptly received in the Office.

Comment 69: One comment suggested that the Office should provide an opportunity to correct a defective EFS publication submission for voluntary publication or republication of an application, rather than simply refunding the publication fee and not publishing the application as provided in § 1.221.

Response: The Office plans to treat a defective EFS publication submission by attempting to contact the submitter (by telephone) to obtain correction of the submission (with a new submission that is correct). The provision in § 1.221 concerning the refunding of the publication fee and not publishing the application will apply in those situations in which the Office's attempts to contact the submitter or obtain correction of the EFS submission are unsuccessful.

Comment 70: One comment suggested that the Office provide a box other than ''Box PCT'' in § 1.417 for receipt of an international publication or copy of an English-language translation of an international application under 35 U.S.C. 154(d)(4) to avoid the commingling of these papers with other PCT submissions.

Response: The Office does not consider a separate box (other than ''Box PCT'') for copies of an international publication or copies of an English language translation of an international application under 35 U.S.C. 154(d)(4) to be necessary. The Office will create such a separate box in the event that a separate box for copies of an international publication or copy of an English language translation of an international application under 35 U.S.C. 154(d)(4) proves to be necessary.

Comment 71: One comment suggested that the Office draft a rule stating what fact situation must exist for an international application to have provisional rights protection in the United States (noting PCT Article 29(2)).

Response: The Office is not charged with administering provisional rights under 35 U.S.C. 154(d) and the enforcement of provisional rights will not be via a proceeding in the Office. Therefore, the Office is not promulgating regulations concerning what situation must exist for any type of application to have provisional rights protection. *See* 35 U.S.C. 2(b)(2)(A).

Comment 72: Several comments suggested that the Office clarify the following issues concerning the treatment of sequence listings: (1) the latest date on which a sequence listing must be submitted to avoid a delay in the transfer of an application to the Technology Centers (and without reduction of any patent term

adjustment); (2) whether applications containing sequence listings that do not comply with § 1.821 *et seq.* will be forwarded to the Technology Centers for substantive examination (or which requirements of § 1.821 *et seq.* must be complied with before the application is forwarded to the Technology Centers for substantive examination); (3) whether non-compliance with the sequence listing requirements of § 1.821 *et seq.* will be treated as strictly as non-compliance with the drawings requirements of § 1.84 (and, if so, what changes will be implemented to reduce complications associated with the use of sequence listing authoring and submission software); and (4) precisely how an applicant is to make a reference to a previously filed sequence listing.

Response: An application will not be transferred to the Technology Centers until it contains a sequence listing (if required) that complies with § 1.821 *et seq.* The impact that a delay in filing a sequence listing (if required) that complies with § 1.821 *et seq.* will have on patent term adjustment is set forth in 35 U.S.C. 154(b)(2)(C)(ii) and § 1.704(b).

Sequence submission software for creating sequence listings is available for download, and is available to make it easier to comply. Applicants are not required to use this software, and need not do so if they feel it does not meet their needs. Applicants are only required to follow the format outlined in § 1.821 *et seq.* Applicants may also obtain the ''checker'' software to check their submissions prior to sending them to the Office to reduce the chance of errors. This ''checker'' software is also available for download.

As discussed above, rather than permit an EFS copy of an application being submitted to the Office for eighteen-month publication purposes to simply contain a reference to a previously filed sequence listing, the Office is requiring that the EFS copy contain a text file copy of the sequence listing.

Classification

Administrative Procedure Act

The changes to §§ 1.19, 1.76 and 1.103 were not included in the Notice of Proposed Rulemaking. The change to § 1.19 merely sets forth the fees for copies of patent application publications, the change to § 1.76 merely provides that assignee information may be included on the application data sheet, and the change to § 1.103 merely sets forth the conditions under which the Office will defer examination of an application. Therefore, these changes concern only rules of Office procedure, and prior notice and an opportunity for public comment for these changes is not required pursuant to 5 U.S.C. 553(b)(A), or any other law.

Regulatory Flexibility Act

The Chief Counsel for Regulation of the Department of Commerce certified to the Chief Counsel for Advocacy, Small Business Administration, that the changes in this final rule do not have a significant impact on a substantial number of small entities (Regulatory Flexibility Act, 5 U.S.C. 605(b)). This final rule implements the eighteen-month publication provisions of §§ 4501 through 4508 of the American Inventors Protection Act of 1999. The changes in this final rule provide procedures for the eighteen-month publication of patent applications.

An applicant may file a nonpublication request (opt-out of eighteen-month publication) if the invention disclosed in the application has not and will not be the subject of an application filed in another country, or under a multilateral international agreement, that requires eighteen-month publication. Since almost all small entities file patent applications only in the United States, almost all small entities can choose whether they want their applications to be subject to eighteen-month publication. The Office receives roughly 60,000 applications each year from small entities. Based upon input from small entity groups during the legislative process, the Office expects that small entities will file a nonpublication request for roughly 30,000 applications (fifty percent) with the remaining 30,000 applications being subject to eighteen-month publication. Since the current application allowance rate is roughly sixty-seven percent, roughly 20,000 applications subject to eighteen-month publication will be allowed, at which time a publication fee ($300) will be due. Since the publication fee is less than one-third of the combined cost of the application filing fee ($345) and patent issue fee ($605), there will not be a significant economic impact on a substantial number of small entities due to eighteen-month publication.

Executive Order 13132

This rulemaking does not contain policies with federalism implications sufficient to warrant preparation of a Federalism Assessment under Executive Order 13132 (Aug. 4, 1999).

Executive Order 12866

This rulemaking has been determined to be not significant for purposes of Executive Order 12866 (Sept. 30, 1993).

Paperwork Reduction Act

This final rule involves information collection requirements that are subject to review by the Office of Management and Budget (OMB) under the Paperwork Reduction Act of 1995 (44 U.S.C. 3501 *et seq.*). The collections of information involved in this final rule have been reviewed and previously approved by OMB under OMB control numbers: 0651–0021, 0651–0027, 0651–0031, 0651–0032, 0651–0033, and 0651–0034.

As required by the Paperwork Reduction Act of 1995 (44 U.S.C. 3507(d)), the United States Patent and Trademark Office submitted an information collection package to OMB for its review and approval of the information collections under OMB control number 0651–0031 and 0651–0032. The United States Patent and Trademark Office is submitting these information collections to OMB for its review and approval because this final rule adds the nonpublication request, rescission of the nonpublication request, electronic filing system copy of the application (for publication purposes), copy of the application file content showing redactions, and petition to accept a delayed priority claim to these collections.

As discussed above, this final rule also involves currently approved information collections under OMB control numbers: 0651–0021, 0651–0027, 0651–0033, and 0651–0034. The United States Patent and Trademark Office is not resubmitting those information collection packages to OMB for its review and approval because the changes in this final rule do not affect the information collection requirements associated with the information collections under those OMB control numbers.

The title, description and respondent description of each of the information collections are shown below with an estimate of each of the annual reporting burdens. Included in each estimate is the time for reviewing instructions, gathering and maintaining the data needed, and completing and reviewing the collection of information.

OMB Number: 0651–0021.

Title: Patent Cooperation Treaty.

Form Numbers: PCT/RO/101, ANNEX/134/144, PTO–1382, PCT/IPEA/401, PCT/IB/328.

Type of Review: Approved through September of 2000.

Affected Public: Individuals or households, business or Other for-profit

institutions, Federal Agencies or Employees, not-for-profit institutions, small businesses or organizations.

Estimated Number of Respondents: 102,950.

Estimated Time Per Response: 0.9538 hour.

Estimated Total Annual Burden Hours: 98,195 hours.

Needs and Uses: The information collected is required by the Patent Cooperation Treaty (PCT). The general purpose of the PCT is to simplify the filing of patent applications on the same invention in different countries. It provides for a centralized filing procedure and a standardized application format.

OMB Number: 0651–0027.

Title: Changes in Patent and Trademark Assignment Practices.

Form Numbers: PTO–1618 and PTO–1619, PTO/SB/15/41.

Type of Review: Approved through May of 2002.

Affected Public: Individuals or Households and Businesses or Other For-Profit Institutions.

Estimated Number of Respondents: 209,040.

Estimated Time Per Response: 0.5 hour.

Estimated Total Annual Burden Hours: 104,520 hours.

Needs and Uses: The Office records about 209,040 assignments or documents related to ownership of patent and trademark cases each year. The Office requires a cover sheet to expedite the processing of these documents and to ensure that they are properly recorded.

OMB Number: 0651–0031.

Title: Patent Processing (Updating).

Form Numbers: PTO/SB/08/21–27/30–31/42/43/61/62/63/64/67/68/91/92/96/97.

Type of Review: Approved through October of 2002.

Affected Public: Individuals or households, business or other for-profit institutions, not-for-profit institutions and Federal Government.

Estimated Number of Respondents: 2,231,365.

Estimated Time Per Response: 0.46 hours.

Estimated Total Annual Burden Hours: 1,018,736 hours.

Needs and Uses: During the processing of an application for a patent, the applicant/agent may be required or desire to submit additional information to the Office concerning the examination of a specific application. The specific information required or which may be submitted includes: Information Disclosure Statements; Terminal Disclaimers; Petitions to Revive; Express Abandonments; Appeal Notices; Petitions for Access; Powers to Inspect; Certificates of Mailing or Transmission; Statements under § 3.73(b); Amendments, Petitions and their Transmittal Letters; and Deposit Account Order Forms.

OMB Number: 0651–0032.

Title: Initial Patent Application.

Form Number: PTO/SB/01–07/13PCT/17–19/29/101–110.

Type of Review: Approved through October of 2002.

Affected Public: Individuals or households, business or other for-profit institutions, not-for-profit institutions and Federal Government.

Estimated Number of Respondents: 334,100.

Estimated Time Per Response: 8.95 hours.

Estimated Total Annual Burden Hours: 2,990,260 hours.

Needs and Uses: The purpose of this information collection is to permit the Office to determine whether an application meets the criteria set forth in the patent statute and regulations. The standard Fee Transmittal form, New Utility Patent Application Transmittal form, New Design Patent Application Transmittal form, New Plant Patent Application Transmittal form, Declaration, and Plant Patent Application Declaration will assist applicants in complying with the requirements of the patent statute and regulations, and will further assist the Office in processing and examination of the application.

OMB Number: 0651–0033.

Title: Post Allowance and Refiling.

Form Numbers: PTO/SB/13/14/44/50–57; PTOL–85b.

Type of Review: Approved through September of 2000.

Affected Public: Individuals or households, business or other for-profit institutions, not-for-profit institutions and Federal Government.

Estimated Number of Respondents: 135,250.

Estimated Time Per Response: 0.325 hour.

Estimated Total Annual Burden Hours: 43,893 hours.

Needs and Uses: This collection of information is required to administer the patent laws pursuant to title 35, U.S.C., concerning the issuance of patents and related actions including correcting errors in printed patents, refiling of patent applications, requesting reexamination of a patent, and requesting a reissue patent to correct an error in a patent. The affected public includes any individual or institution whose application for a patent has been allowed or who takes action as covered by the applicable rules.

OMB Number: 0651–0034.

Title: Secrecy/License to Export.

Form Numbers: None.

Type of Review: Approved through January of 2001.

Affected Public: Individuals or households, business or other for-profit institutions, not-for-profit institutions and Federal Government.

Estimated Number of Respondents: 2,187.

Estimated Time Per Response: 0.67 hour.

Estimated Total Annual Burden Hours: 1,476 hours.

Needs and Uses: In the interest of national security, patent laws and regulations place certain limitations on the disclosure of information contained in patents and patent applications and on the filing of applications for patent in foreign countries.

The principal impact of the changes in this final rule is to implement the changes to Office practice necessitated by §§ 4501 through 4508 of the American Inventors Protection Act of 1999 (enacted into law by § 1000(a)(9), Division B, of Public Law 106–113).

Comments are invited on: (1) Whether the collection of information is necessary for proper performance of the functions of the agency; (2) the accuracy of the agency's estimate of the burden; (3) ways to enhance the quality, utility, and clarity of the information to be collected; and (4) ways to minimize the burden of the collection of information to respondents.

Interested persons are requested to send comments regarding these information collections, including suggestions for reducing this burden, to Robert J. Spar, Director, Office of Patent Legal Administration, United States Patent and Trademark Office, Washington, D.C. 20231, or to the Office of Information and Regulatory Affairs of OMB, New Executive Office Building, 725 17th Street, N.W., Room 10235, Washington, D.C. 20503, Attention: Desk Officer for the United States Patent and Trademark Office.

Notwithstanding any other provision of law, no person is required to respond to nor shall a person be subject to a penalty for failure to comply with a collection of information subject to the requirements of the Paperwork Reduction Act unless that collection of information displays a currently valid OMB control number.

List of Subjects

37 CFR Part 1

Administrative practice and procedure, Courts, Freedom of Information, Inventions and patents, Reporting and record keeping requirements, Small businesses.

37 CFR Part 5

Classified information, Foreign relations, Inventions and patents.

For the reasons set forth in the preamble, 37 CFR Parts 1 and 5 are amended as follows:

PART 1—RULES OF PRACTICE IN PATENT CASES

1. The authority citation for 37 CFR Part 1 continues to read as follows:

Authority: 35 U.S.C. 2(b)(2).

2. Section 1.9 is amended by revising paragraph (c) to read as follows:

§ 1.9 Definitions.

* * * * *

(c) A published application as used in this chapter means an application for patent which has been published under 35 U.S.C. 122(b).

* * * * *

3. Section 1.11 is amended by revising paragraph (a) to read as follows:

§ 1.11 Files open to the public.

(a) The specification, drawings, and all papers relating to the file of an abandoned published application, except if a redacted copy of the application was used for the patent application publication, a patent, or a statutory invention registration are open to inspection by the public, and copies may be obtained upon the payment of the fee set forth in § 1.19(b)(2). See § 2.27 for trademark files.

* * * * *

4. Section 1.12 is amended by revising paragraphs (a)(1) and (b) to read as follows:

§ 1.12 Assignment records open to public inspection.

(a)(1) Separate assignment records are maintained in the United States Patent and Trademark Office for patents and trademarks. The assignment records, relating to original or reissue patents, including digests and indexes (for assignments recorded on or after May 1, 1957), published patent applications, and assignment records relating to pending or abandoned trademark applications and to trademark registrations (for assignments recorded on or after January 1, 1955), are open to public inspection at the United States Patent and Trademark Office, and copies of those assignment records may be obtained upon request and payment of the fee set forth in § 1.19 and § 2.6 of this chapter.

* * * * *

(b) Assignment records, digests, and indexes relating to any pending or abandoned patent application which has not been published under 35 U.S.C. 122(b) are not available to the public. Copies of any such assignment records and related information shall be obtainable only upon written authority of the applicant or applicant's assignee or attorney or agent or upon a showing that the person seeking such information is a *bona fide* prospective or actual purchaser, mortgagee, or licensee of such application, unless it shall be necessary to the proper conduct of business before the Office or as provided in this part.

* * * * *

5. Section 1.13 is revised to read as follows:

§ 1.13 Copies and certified copies.

(a) Non-certified copies of patents, patent application publications, and trademark registrations and of any records, books, papers, or drawings within the jurisdiction of the United States Patent and Trademark Office and open to the public, will be furnished by the United States Patent and Trademark Office to any person, and copies of other records or papers will be furnished to persons entitled thereto, upon payment of the appropriate fee.

(b) Certified copies of patents, patent application publications, and trademark registrations and of any records, books, papers, or drawings within the jurisdiction of the United States Patent and Trademark Office and open to the public or persons entitled thereto will be authenticated by the seal of the United States Patent and Trademark Office and certified by the Commissioner, or in his or her name attested by an officer of the United States Patent and Trademark Office authorized by the Commissioner, upon payment of the fee for the certified copy.

6. Section § 1.14 is amended by revising paragraphs (a), (b), (c), (e), (i) and (j) to read as follows:

• 1.14 Patent applications preserved in confidence.

(a) *Confidentiality of patent application information.* Patent applications that have not been published under 35 U.S.C. 122(b) are generally preserved in confidence pursuant to 35 U.S.C. 122(a). Information concerning the filing, pendency, or subject matter of an application for patent, including status information, and access to the application, will only be given to the public as set forth in § 1.11 or in this section.

(1) *Status information* is:

(i) Whether the application is pending, abandoned, or patented;

(ii) Whether the application has been published under 35 U.S.C. 122(b); and

(iii) The application ''numerical identifier'' which may be:

(A) The eight-digit application number (the two-digit series code plus the six-digit serial number); or

(B) The six-digit serial number plus any one of the filing date of the national application, the international filing date, or date of entry into the national stage.

(2) Access is defined as providing the application file for review and copying of any material in the application file.

(b) *When status information may be supplied.* Status information of an application may be supplied by the Office to the public if any of the following apply:

(1) Access to the application is available pursuant to paragraph (e) of this section;

(2) The application is referred to by its numerical identifier in a published patent document (*e.g.,* a U.S. patent, a U.S. patent application publication, or an international application publication), or in a U.S. application open to public inspection (§ 1.11(b), or paragraph (e)(2)(i) or (e)(2)(ii) of this section);

(3) The application is a published international application in which the United States of America has been indicated as a designated state; or

(4) The application claims the benefit of the filing date of an application for which status information may be provided pursuant to paragraphs (b)(1) through (b)(3) of this section.

(c) *When copies may be supplied.* A copy of an application-as-filed or a file wrapper and contents may be supplied by the Office to the public[, subject to paragraph (i) of this section (which addresses international applications),] if any of the following apply:

(1) *Application-as-filed.*

(i) If a U.S. patent application publication or patent incorporates by reference, or includes a specific reference under 35 U.S.C. 119(e) or 120 to, a pending or abandoned application, a copy of that application-as-filed may be provided to any person upon written request including the fee set forth in § 1.19(b)(1); or

(ii) If an international application, which designates the U.S. and which has been published in accordance with PCT Article 21(2), incorporates by

reference or claims priority under PCT Article 8 to a pending or abandoned U.S. application, a copy of that application-as-filed may be provided to any person upon written request including a showing that the publication of the application in accordance with PCT Article 21(2) has occurred and that the U.S. was designated, and upon payment of the appropriate fee set forth in § 1.19(b)(1).

(2) *File wrapper and contents.* A copy of the specification, drawings, and all papers relating to the file of an abandoned or pending published application may be provided to any person upon written request, including the fee set forth in § 1.19(b)(2). If a redacted copy of the application was used for the patent application publication, the copy of the specification, drawings, and papers may be limited to a redacted copy.

* * * * *

(e) *Public access to a pending or abandoned application.* Access to an application may be provided to any person[, subject to paragraph (i) of this section,] if a written request for access is submitted, the application file is available, and any of the following apply:

(1) The application is open to public inspection pursuant to § 1.11(b); or

(2) The application is abandoned, it is not within the file jacket of a pending application under § 1.53(d), and it is referred to:

(i) In a U.S. patent application publication or patent;

(ii) In another U.S. application which is open to public inspection either pursuant to § 1.11(b) or paragraph (e)(2)(i) of this section; or

(iii) In an international application which designates the U.S. and is published in accordance with PCT Article 21(2).

* * * * *

(i) *International applications.*

(1) Copies of international application files for international applications which designate the U.S. and which have been published in accordance with PCT Article 21(2), or copies of a document in such application files, will be furnished in accordance with PCT Articles 30 and 38 and PCT Rules 94.2 and 94.3, upon written request including a showing that the publication of the application has occurred and that the U.S. was designated, and upon payment of the appropriate fee (see § 1.19(b)(2) or 1.19(b)(3)), if:

(i) With respect to the Home Copy, the international application was filed with the U.S. Receiving Office;

(ii) With respect to the Search Copy, the U.S. acted as the International Searching Authority; or

(iii) With respect to the Examination Copy, the United States acted as the International Preliminary Examining Authority, an International Preliminary Examination Report has issued, and the United States was elected.

(2) A copy of an English language translation of an international application which has been filed in the United States Patent and Trademark Office pursuant to 35 U.S.C. 154(2)(d)(4) will be furnished upon written request including a showing that the publication of the application in accordance with PCT Article 21(2) has occurred and that the U.S. was designated, and upon payment of the appropriate fee (§ 1.19(b)(2) or § 1.19(b)(3)).

(3) Access to international application files for international applications which designate the U.S. and which have been published in accordance with PCT Article 21(2), or copies of a document in such application files, will be furnished in accordance with PCT Articles 30 and 38 and PCT Rules 94.2 and 94.3, upon written request including a showing that the publication of the application has occurred and that the U.S. was designated.

(4) In accordance with PCT Article 30, copies of an international application-as-filed under paragraph (c)(1) of this section will not be provided prior to the international publication of the application pursuant to PCT Article 21(2).

(5) Access to international application files under paragraphs (e) and (i)(3) of this section will not be permitted with respect to the Examination Copy in accordance with PCT Article 38.

(j) *Access or copies in other circumstances.* The Office, either *sua sponte* or on petition, may also provide access or copies of all or part of an application if necessary to carry out an Act of Congress or if warranted by other special circumstances. Any petition by a member of the public seeking access to, or copies of, all or part of any pending or abandoned application preserved in confidence pursuant to paragraph (a) of this section, or any related papers, must include:

(1) The fee set forth in § 1.17(h); and

(2) A showing that access to the application is necessary to carry out an Act of Congress or that special circumstances exist which warrant petitioner being granted access to all or part of the application.

7. Section 1.17 is amended by revising the section heading and paragraphs (h), (i), (l), (m) and (p) and adding paragraph (t) to read as follows:

§ 1.17 Patent application and reexamination processing fees.

* * * * *

(h) For filing a petition under one of the following sections which refers to this paragraph: $130.00.

§ 1.12—for access to an assignment record.

§ 1.14—for access to an application.

§ 1.47—for filing by other than all the inventors or a person not the inventor.

§ 1.53(e)—to accord a filing date.

§ 1.59—for expungement and return of information.

§ 1.84—for accepting color drawings or photographs.

§ 1.91—for entry of a model or exhibit.

§ 1.102—to make an application special.

§ 1.103(a)—to suspend action in an application.

§ 1.138(c)—to expressly abandon an application to avoid publication.

§ 1.182—for decision on a question not specifically provided for.

§ 1.183—to suspend the rules.

§ 1.295—for review of refusal to publish a statutory invention registration.

§ 1.313—to withdraw an application from issue.

§ 1.314—to defer issuance of a patent.

§ 1.377—for review of decision refusing to accept and record payment of a maintenance fee filed prior to expiration of a patent.

§ 1.378(e)—for reconsideration of decision on petition refusing to accept delayed payment of maintenance fee in an expired patent.

§ 1.644(e)—for petition in an interference.

§ 1.644(f)—for request for reconsideration of a decision on petition in an interference.

§ 1.666(b)—for access to an interference settlement agreement.

§ 1.666(c)—for late filing of interference settlement agreement.

§ 1.741(b)—to accord a filing date to an application under § 1.740 for extension of a patent term.

§ 5.12—for expedited handling of a foreign filing license.

§ 5.15—for changing the scope of a license.

§ 5.25—for retroactive license.

(i) Processing fee for taking action under one of the following sections which refers to this paragraph: $130.00.

§ 1.28(c)(3)—for processing a non-itemized fee deficiency based on an error in small entity status.

§ 1.41—for supplying the name or names of the inventor or inventors after

the filing date without an oath or declaration as prescribed by § 1.63, except in provisional applications.

§ 1.48—for correcting inventorship, except in provisional applications.

§ 1.52(d)—for processing a nonprovisional application filed with a specification in a language other than English.

§ 1.53(b)(3)—to convert a provisional application filed under § 1.53(c) into a nonprovisional application under § 1.53(b).

§ 1.55—for entry of late priority papers.

§ 1.99(e)—for processing a belated submission under § 1.99.

§ 1.103(b)—for requesting limited suspension of action, continued prosecution application (§ 1.53(d)).

§ 1.103(c)—for requesting limited suspension of action, request for continued examination (§ 1.114).

§ 1.103(d)—for requesting deferred examination of an application.

§ 1.217—for processing a redacted copy of a paper submitted in the file of an application in which a redacted copy was submitted for the patent application publication.

§ 1.221—for requesting voluntary publication or republication of an application.

§ 1.497(d)—for filing an oath or declaration pursuant to 35 U.S.C. 371(c)(4) naming an inventive entity different from the inventive entity set forth in the international stage.

§ 3.81—for a patent to issue to assignee, assignment submitted after payment of the issue fee.

* * * * *

(l) For filing a petition for the revival of an unavoidably abandoned application under 35 U.S.C. 111, 133, 364, or 371, for the unavoidably delayed payment of the issue fee under 35 U.S.C. 151, or for the revival of an unavoidably terminated reexamination proceeding under 35 U.S.C. 133 (§ 1.137(a)):

By a small entity (§ 1.27(a)): $55.00.
By other than a small entity: $110.00.

(m) For filing a petition for revival of an unintentionally abandoned application, for the unintentionally delayed payment of the fee for issuing a patent, or for the revival of an unintentionally terminated reexamination proceeding under 35 U.S.C. 41(a)(7) (§ 1.137(b)):

By a small entity (§ 1.27(a)): $620.00.
By other than a small entity: $1,240.00.

* * * * *

(p) For an information disclosure statement under § 1.97(c) or (d) or a submission under § 1.99: $180.00.

* * * * *

(t) For the acceptance of an unintentionally delayed claim for priority under 35 U.S.C. 119, 120, 121, or 365(a) or (c) (§§ 1.55 and 1.78): $1,240.00.

8. Section 1.18 is amended by adding paragraph (d) to read as follows:

§ 1.18 Patent post-allowance (including issue) fees.

* * * * *

Publication fee ..... $300.00.

* * * * *

9. Section 1.19 is amended by revising paragraph (a) to read as follows:

§ 1.19 Document supply fees.

* * * * *

(a) Uncertified copies of patent application publications and patents:

(1) Printed copy of the paper portion of a patent application publication or patent, including a design patent, statutory invention registration, or defensive publication document:

(i) Regular service, which includes preparation of copies by the Office within two to three business days and delivery by United States Postal Service or to an Office Box; and preparation of copies by the Office within one business day of receipt and delivery by electronic means (*e.g.,* facsimile, electronic mail) ..... $3.00.

(ii) Next business day delivery to Office Box ..... $6.00.

(iii) Expedited delivery by commercial delivery service ..... $25.00.

(2) Printed copy of a plant patent in color: ..... $15.00.

(3) Color copy of a patent (other than a plant patent) or statutory invention registration containing a color drawing ..... $25.00.

* * * * *

10. Section 1.24 is removed and reserved.

§ 1.24 [Removed and Reserved]

11. Section 1.52 is amended by revising paragraph (d) to read as follows:

§ 1.52 Language, paper, writing, margins, compact disc specifications.

* * * * *

(d) A nonprovisional or provisional application may be filed in a language other than English.

(1) *Nonprovisional application.* If a nonprovisional application is filed in a language other than English, an English language translation of the non-English language application, a statement that the translation is accurate, and the processing fee set forth in § 1.17(i) are required. If these items are not filed with the application, applicant will be notified and given a period of time within which they must be filed in order to avoid abandonment.

(2) *Provisional application.* If a provisional application is filed in a language other than English, an English language translation of the non-English language provisional application will not be required in the provisional application. See § 1.78(a) for the requirements for claiming the benefit of such provisional application in a nonprovisional application.

* * * * *

12. Section 1.55 is amended by revising paragraph (a) and adding paragraph (c) to read as follows:

§ 1.55 Claim for foreign priority.

(a) An applicant in a nonprovisional application may claim the benefit of the filing date of one or more prior foreign applications under the conditions specified in 35 U.S.C. 119(a) through (d), 172, and 365(a).

(1)(i) In an original application filed under 35 U.S.C. 111(a), the claim for priority must be presented during the pendency of the application, and within the later of four months from the actual filing date of the application or sixteen months from the filing date of the prior foreign application. This time period is not extendable. The claim must identify the foreign application for which priority is claimed, as well as any foreign application for the same subject matter and having a filing date before that of the application for which priority is claimed, by specifying the application number, country (or intellectual property authority), day, month, and year of its filing. The time period in this paragraph does not apply to an application for a design patent.

(ii) In an application that entered the national stage from an international application after compliance with 35 U.S.C. 371, the claim for priority must be made during the pendency of the application and within the time limit set forth in the PCT and the Regulations under the PCT.

(2) The claim for priority and the certified copy of the foreign application specified in 35 U.S.C. 119(b) or PCT Rule 17 must, in any event, be filed before the patent is granted. If the claim for priority or the certified copy of the foreign application is filed after the date the issue fee is paid, it must be accompanied by the processing fee set forth in § 1.17(i), but the patent will not include the priority claim unless corrected by a certificate of correction under 35 U.S.C. 255 and § 1.323.

(3) When the application becomes involved in an interference (§ 1.630), when necessary to overcome the date of

a reference relied upon by the examiner, or when deemed necessary by the examiner, the Office may require that the claim for priority and the certified copy of the foreign application be filed earlier than provided in paragraphs (a)(1) or (a)(2) of this section.

(4) An English language translation of a non-English language foreign application is not required except when the application is involved in an interference (§ 1.630), when necessary to overcome the date of a reference relied upon by the examiner, or when specifically required by the examiner. If an English language translation is required, it must be filed together with a statement that the translation of the certified copy is accurate.

* * * * *

(c) Unless such claim is accepted in accordance with the provisions of this paragraph, any claim for priority under 35 U.S.C. 119(a)–(d) or 365(a) not presented within the time period provided by paragraph (a) of this section is considered to have been waived. If a claim for priority under 35 U.S.C. 119(a)–(d) or 365(a) is presented after the time period provided by paragraph (a) of this section, the claim may be accepted if the claim identifying the prior foreign application by specifying its application number, country (or intellectual property authority), and the day, month, and year of its filing was unintentionally delayed. A petition to accept a delayed claim for priority under 35 U.S.C. 119(a)–(d) or 365(a) must be accompanied by:

(1) The surcharge set forth in § 1.17(t); and

(2) A statement that the entire delay between the date the claim was due under paragraph (a)(1) of this section and the date the claim was filed was unintentional. The Commissioner may require additional information where there is a question whether the delay was unintentional.

13. Section 1.72 is amended by revising paragraph (a) to read as follows:

§ 1.72 Title and abstract.

(a) The title of the invention may not exceed 500 characters in length and must be as short and specific as possible. Characters that cannot be captured and recorded in the Office's automated information systems may not be reflected in the Office's records in such systems or in documents created by the Office. Unless the title is supplied in an application data sheet (§ 1.76), the title of the invention should appear as a heading on the first page of the specification.

* * * * *

14. Section 1.76 is amended by adding a new paragraph (b)(7) to read as follows:

§ 1.76 Application data sheet.

* * * * *

(b) * * *

(7) *Assignee information.* This information includes the name (either person or juristic entity) and address of the assignee of the entire right, title, and interest in an application. Providing this information in the application data sheet does not substitute for compliance with any requirement of part 3 of this chapter to have an assignment recorded by the Office.

* * * * *

15. Section 1.78 is amended by revising paragraphs (a)(2), (a)(3), and (a)(4), and adding new paragraphs (a)(5) and (a)(6) to read as follows:

§ 1.78 Claiming benefit of earlier filing date and cross references to other applications.

(a)(1) * * *

(2) Except for a continued prosecution application filed under § 1.53(d), any nonprovisional application claiming the benefit of one or more prior filed copending nonprovisional applications or international applications designating the United States of America must contain a reference to each such prior application, identifying it by application number (consisting of the series code and serial number) or international application number and international filing date and indicating the relationship of the applications. This reference must be submitted during the pendency of the application, and within the later of four months from the actual filing date of the application or sixteen months from the filing date of the prior application. This time period is not extendable. Unless the reference required by this paragraph is included in an application data sheet (§ 1.76), the specification must contain or be amended to contain such reference in the first sentence following the title. If the application claims the benefit of an international application, the first sentence of the specification must include an indication of whether the international application was published under PCT Article 21(2) in English (regardless of whether benefit for such application is claimed in the application data sheet). The request for a continued prosecution application under § 1.53(d) is the specific reference required by 35 U.S.C. 120 to the prior application. The identification of an application by application number under this section is the specific reference required by 35 U.S.C. 120 to every application assigned that application number. Cross references to other related applications may be made when appropriate (see § 1.14). Except as provided in paragraph (a)(3) of this section, the failure to timely submit the reference required by 35 U.S.C. 120 and this paragraph is considered a waiver of any benefit under 35 U.S.C. 120, 121, or 365(c) to such prior application. The time period set forth in this paragraph does not apply to an application for a design patent.

(3) If the reference required by 35 U.S.C. 120 and paragraph (a)(2) of this section is presented in a nonprovisional application after the time period provided by paragraph (a)(2) of this section, the claim under 35 U.S.C. 120, 121, or 365(c) for the benefit of a prior filed copending nonprovisional application or international application designating the United States of America may be accepted if the reference identifying the prior application by application number or international application number and international filing date was unintentionally delayed. A petition to accept an unintentionally delayed claim under 35 U.S.C. 120, 121, or 365(c) for the benefit of a prior filed application must be accompanied by:

(i) The surcharge set forth in § 1.17(t); and

(ii) A statement that the entire delay between the date the claim was due under paragraph (a)(2) of this section and the date the claim was filed was unintentional. The Commissioner may require additional information where there is a question whether the delay was unintentional.

(4) A nonprovisional application other than for a design patent may claim an invention disclosed in one or more prior filed provisional applications. In order for a nonprovisional application to claim the benefit of one or more prior filed provisional applications, each prior provisional application must name as an inventor at least one inventor named in the later filed nonprovisional application and disclose the named inventor's invention claimed in at least one claim of the later filed nonprovisional application in the manner provided by the first paragraph of 35 U.S.C. 112. In addition, each prior provisional application must be entitled to a filing date as set forth in § 1.53(c), and the basic filing fee set forth in § 1.16(k) must be paid within the time period set forth in § 1.53(g).

(5) Any nonprovisional application claiming the benefit of one or more prior filed copending provisional applications must contain a reference to each such prior provisional application, identifying it as a provisional

application, and including the provisional application number (consisting of series code and serial number), and, if the provisional application is filed in a language other than English, an English language translation of the non-English language provisional application and a statement that the translation is accurate. This reference and English language translation of a non-English language provisional application must be submitted during the pendency of the nonprovisional application, and within the later of four months from the actual filing date of the nonprovisional application or sixteen months from the filing date of the prior provisional application. This time period is not extendable. Unless the reference required by this paragraph is included in an application data sheet (§ 1.76), the specification must contain or be amended to contain such reference in the first sentence following the title. Except as provided in paragraph (a)(6) of this section, the failure to timely submit the reference and English language translation of a non-English language provisional application required by 35 U.S.C. 119(e) and this paragraph is considered a waiver of any benefit under 35 U.S.C. 119(e) to such prior provisional application.

(6) If the reference or English language translation of a non-English language provisional application required by 35 U.S.C. 119(e) and paragraph (a)(5) of this section is presented in a nonprovisional application after the time period provided by paragraph (a)(5) of this section, the claim under 35 U.S.C. 119(e) for the benefit of a prior filed provisional application may be accepted during the pendency of the nonprovisional application if the reference identifying the prior application by provisional application number and any English language translation of a non-English language provisional application were unintentionally delayed. A petition to accept an unintentionally delayed claim under 35 U.S.C. 119(e) for the benefit of a prior filed provisional application must be accompanied by:

(i) The surcharge set forth in § 1.17(t); and

(ii) A statement that the entire delay between the date the claim was due under paragraph (a)(5) of this section and the date the claim was filed was unintentional. The Commissioner may require additional information where there is a question whether the delay was unintentional.

* * * * *

16. Section 1.84 is amended by revising paragraphs (a)(2), (e), and (j) to read as follows:

§ 1.84 Standards for drawings.

(a) * * *

(2) *Color.* On rare occasions, color drawings may be necessary as the only practical medium by which to disclose the subject matter sought to be patented in a utility or design patent application or the subject matter of a statutory invention registration. The color drawings must be of sufficient quality such that all details in the drawings are reproducible in black and white in the printed patent. Color drawings are not permitted in international applications (see PCT Rule 11.13), or in an application, or copy thereof, submitted under the Office electronic filing system. The Office will accept color drawings in utility or design patent applications and statutory invention registrations only after granting a petition filed under this paragraph explaining why the color drawings are necessary. Any such petition must include the following:

(i) The fee set forth in § 1.17(h);

(ii) Three (3) sets of color drawings;

(iii) A black and white photocopy that accurately depicts, to the extent possible, the subject matter shown in the color drawing; and

(iv) An amendment to the specification to insert (unless the specification contains or has been previously amended to contain) the following language as the first paragraph of the brief description of the drawings:

The patent or application file contains at least one drawing executed in color. Copies of this patent or patent application publication with color drawing(s) will be provided by the Office upon request and payment of the necessary fee.

* * * * *

(e) *Type of paper.* Drawings submitted to the Office must be made on paper which is flexible, strong, white, smooth, non-shiny, and durable. All sheets must be reasonably free from cracks, creases, and folds. Only one side of the sheet may be used for the drawing. Each sheet must be reasonably free from erasures and must be free from alterations, overwritings, and interlineations. Photographs must be developed on paper meeting the sheet-size requirements of paragraph (f) of this section and the margin requirements of paragraph (g) of this section. See paragraph (b) of this section for other requirements for photographs.

* * * * *

(j) *Front page view.* The drawing must contain as many views as necessary to show the invention. One of the views should be suitable for inclusion on the front page of the patent application publication and patent as the illustration of the invention. Views must not be connected by projection lines and must not contain center lines. Applicant may suggest a single view (by figure number) for inclusion on the front page of the patent application publication and patent.

* * * * *

17. Section 1.85 is amended by revising paragraph (a) to read as follows:

§ 1.85 Corrections to drawings.

(a) A utility or plant application will not be placed on the files for examination until objections to the drawings have been corrected. Except as provided in § 1.215(c), any patent application publication will not include drawings filed after the application has been placed on the files for examination. Unless applicant is otherwise notified in an Office action, objections to the drawings in a utility or plant application will not be held in abeyance, and a request to hold objections to the drawings in abeyance will not be considered a *bona fide* attempt to advance the application to final action (§ 1.135(c)). If a drawing in a design application meets the requirements of § 1.84(e), (f), and (g) and is suitable for reproduction, but is not otherwise in compliance with § 1.84, the drawing may be admitted for examination.

* * * * *

18. Section 1.98 is amended by revising paragraphs (a)(2) and (b) to read as follows:

§ 1.98 Content of information disclosure statement.

(a) * * *

(2) A legible copy of:

(i) Each U.S. patent application publication and U.S. and foreign patent;

(ii) Each publication or that portion which caused it to be listed;

(iii) For each cited pending U.S. application, the application specification including the claims, and any drawing of the application, or that portion of the application which caused it to be listed including any claims directed to that portion; and

(iv) All other information or that portion which caused it to be listed; and

* * * * *

(b)(1) Each U.S. patent listed in an information disclosure statement must be identified by inventor, patent number, and issue date.

(2) Each U.S. patent application publication listed in an information disclosure statement shall be identified

by applicant, patent application publication number, and publication date.

(3) Each U.S. application listed in an information disclosure statement must be identified by the inventor, application number, and filing date.

(4) Each foreign patent or published foreign patent application listed in an information disclosure statement must be identified by the country or patent office which issued the patent or published the application, an appropriate document number, and the publication date indicated on the patent or published application.

(5) Each publication listed in an information disclosure statement must be identified by publisher, author (if any), title, relevant pages of the publication, date, and place of publication.

* * * * *

19. A new § 1.99 is added to read as follows:

§ 1.99 Third-party submission in published application.

(a) A submission by a member of the public of patents or publications relevant to a pending published application may be entered in the application file if the submission complies with the requirements of this section and the application is still pending when the submission and application file are brought before the examiner.

(b) A submission under this section must identify the application to which it is directed by application number and include:

(1) The fee set forth in § 1.17(p);

(2) A list of the patents or publications submitted for consideration by the Office, including the date of publication of each patent or publication;

(3) A copy of each listed patent or publication in written form or at least the pertinent portions; and

(4) An English language translation of all the necessary and pertinent parts of any non-English language patent or publication in written form relied upon.

(c) The submission under this section must be served upon the applicant in accordance with § 1.248.

(d) A submission under this section shall not include any explanation of the patents or publications, or any other information. The Office will dispose of such explanation or information if included in a submission under this section. A submission under this section is also limited to ten total patents or publications.

(e) A submission under this section must be filed within two months from the date of publication of the application (§ 1.215(a)) or prior to the mailing of a notice of allowance (§ 1.311), whichever is earlier. Any submission under this section not filed within this period is permitted only when the patents or publications could not have been submitted to the Office earlier, and must also be accompanied by the processing fee set forth in § 1.17(i). A submission by a member of the public to a pending published application that does not comply with the requirements of this section will be returned or discarded.

(f) A member of the public may include a self-addressed postcard with a submission to receive an acknowledgment by the Office that the submission has been received. A member of the public filing a submission under this section will not receive any communications from the Office relating to the submission other than the return of a self-addressed postcard. In the absence of a request by the Office, an applicant has no duty to, and need not, reply to a submission under this section. No further submission on behalf of the member of the public will be considered, unless such submission raises new issues which could not have been earlier presented.

20.Section 1.103 is amended by redesignating paragraphs (d) through (f) as (e) through (g) and adding a new paragraph (d) to read as follows:

§ 1.103 Suspension of action by the Office.

* * * * *

(d) *Deferral of examination.* On request of the applicant, the Office may grant a deferral of examination under the conditions specified in this paragraph for a period not extending beyond three years from the earliest filing date for which a benefit is claimed under title 35, United States Code. A request for deferral of examination under this paragraph must include the publication fee set forth in § 1.18(d) and the processing fee set forth in § 1.17(i). A request for deferral of examination under this paragraph will not be granted unless:

(1) The application is an original utility or plant application filed under § 1.53(b) or resulting from entry of an international application into the national stage after compliance with § 1.494 or § 1.495;

(2) The applicant has not filed a nonpublication request under § 1.213(a), or has filed a request under § 1.213(b) to rescind a previously filed nonpublication request;

(3) The application is in condition for publication as provided in § 1.211(c); and

(4) The Office has not issued either an Office action under 35 U.S.C. 132 or a notice of allowance under 35 U.S.C. 151.

* * * * *

21. Section 1.104 is amended by removing paragraph (a)(5) and revising paragraph (d)(1) to read as follows:

§ 1.104 Nature of Examination.

* * * * *

(d) *Citation of references.*

(1) If domestic patents are cited by the examiner, their numbers and dates, and the names of the patentees will be stated. If domestic patent application publications are cited by the examiner, their publication number, publication date, and the names of the applicants will be stated. If foreign published applications or patents are cited, their nationality or country, numbers and dates, and the names of the patentees will be stated, and such other data will be furnished as may be necessary to enable the applicant, or in the case of a reexamination proceeding, the patent owner, to identify the published applications or patents cited. In citing foreign published applications or patents, in case only a part of the document is involved, the particular pages and sheets containing the parts relied upon will be identified. If printed publications are cited, the author (if any), title, date, pages or plates, and place of publication, or place where a copy can be found, will be given.

* * * * *

22. Section 1.130 is amended by revising the section heading and paragraph (a) to read as follows:

§ 1.130 Affidavit or declaration to disqualify commonly owned patent or published application as prior art.

(a) When any claim of an application or a patent under reexamination is rejected under 35 U.S.C. 103 on a U.S. patent or U.S. patent application publication which is not prior art under 35 U.S.C. 102(b), and the inventions defined by the claims in the application or patent under reexamination and by the claims in the patent or published application are not identical but are not patentably distinct, and the inventions are owned by the same party, the applicant or owner of the patent under reexamination may disqualify the patent or patent application publication as prior art. The patent or patent application publication can be disqualified as prior art by submission of:

(1) A terminal disclaimer in accordance with § 1.321(c); and

(2) An oath or declaration stating that the application or patent under reexamination and patent or published application are currently owned by the same party, and that the inventor named in the application or patent under reexamination is the prior inventor under 35 U.S.C. 104.

* * * * *

23. Section 1.131 is amended by revising paragraph (a) to read as follows:

§ 1.131 Affidavit or declaration of prior invention.

(a) When any claim of an application or a patent under reexamination is rejected, the inventor of the subject matter of the rejected claim, the owner of the patent under reexamination, or the party qualified under §§ 1.42, 1.43, or 1.47, may submit an appropriate oath or declaration to establish invention of the subject matter of the rejected claim prior to the effective date of the reference or activity on which the rejection is based. The effective date of a U.S. patent, U.S. patent application publication, or international application publication under PCT Article 21(2) is the earlier of its publication date or date that it is effective as a reference under 35 U.S.C. 102(e). Prior invention may not be established under this section in any country other than the United States, a NAFTA country, or a WTO member country. Prior invention may not be established under this section before December 8, 1993, in a NAFTA country other than the United States, or before January 1, 1996, in a WTO member country other than a NAFTA country. Prior invention may not be established under this section if either:

(1) The rejection is based upon a U.S. patent or U.S. patent application publication of a pending or patented application to another or others which claims the same patentable invention as defined in § 1.601(n); or

(2) The rejection is based upon a statutory bar.

* * * * *

24. Section 1.132 is revised to read as follows:

§ 1.132 Affidavits or declarations traversing rejections or objections.

When any claim of an application or a patent under reexamination is rejected or objected to, any evidence submitted to traverse the rejection or objection on a basis not otherwise provided for must be by way of an oath or declaration under this section.

25. Section 1.137 is revised to read as follows:

§ 1.137 Revival of abandoned application, terminated reexamination proceeding, or lapsed patent.

(a) *Unavoidable.* If the delay in reply by applicant or patent owner was unavoidable, a petition may be filed pursuant to this paragraph to revive an abandoned application, a reexamination proceeding terminated under §§ 1.550(d) or 1.957(b) or (c), or a lapsed patent. A grantable petition pursuant to this paragraph must be accompanied by:

(1) The reply required to the outstanding Office action or notice, unless previously filed;

(2) The petition fee as set forth in § 1.17(l);

(3) A showing to the satisfaction of the Commissioner that the entire delay in filing the required reply from the due date for the reply until the filing of a grantable petition pursuant to this paragraph was unavoidable; and

(4) Any terminal disclaimer (and fee as set forth in § 1.20(d)) required pursuant to paragraph (d) of this section.

(b) *Unintentional.* If the delay in reply by applicant or patent owner was unintentional, a petition may be filed pursuant to this paragraph to revive an abandoned application, a reexamination proceeding terminated under §§ 1.550(d) or 1.957(b) or (c), or a lapsed patent. A grantable petition pursuant to this paragraph must be accompanied by:

(1) The reply required to the outstanding Office action or notice, unless previously filed;

(2) The petition fee as set forth in § 1.17(m);

(3) A statement that the entire delay in filing the required reply from the due date for the reply until the filing of a grantable petition pursuant to this paragraph was unintentional. The Commissioner may require additional information where there is a question whether the delay was unintentional; and

(4) Any terminal disclaimer (and fee as set forth in § 1.20(d)) required pursuant to paragraph (d) of this section.

(c) *Reply.* In a nonprovisional application abandoned for failure to prosecute, the required reply may be met by the filing of a continuing application. In a nonprovisional utility or plant application filed on or after June 8, 1995, and abandoned for failure to prosecute, the required reply may also be met by the filing of a request for continued examination in compliance with § 1.114. In an application or patent, abandoned or lapsed for failure to pay the issue fee or any portion thereof, the required reply must include payment of the issue fee or any outstanding balance. In an application, abandoned for failure to pay the publication fee, the required reply must include payment of the publication fee.

(d) *Terminal disclaimer.* (1) Any petition to revive pursuant to this section in a design application must be accompanied by a terminal disclaimer and fee as set forth in § 1.321 dedicating to the public a terminal part of the term of any patent granted thereon equivalent to the period of abandonment of the application. Any petition to revive pursuant to this section in either a utility or plant application filed before June 8, 1995, must be accompanied by a terminal disclaimer and fee as set forth in § 1.321 dedicating to the public a terminal part of the term of any patent granted thereon equivalent to the lesser of:

(i) The period of abandonment of the application; or

(ii) The period extending beyond twenty years from the date on which the application for the patent was filed in the United States or, if the application contains a specific reference to an earlier filed application(s) under 35 U.S.C. 120, 121, or 365(c), from the date on which the earliest such application was filed.

(2) Any terminal disclaimer pursuant to paragraph (d)(1) of this section must also apply to any patent granted on a continuing utility or plant application filed before June 8, 1995, or a continuing design application, that contains a specific reference under 35 U.S.C. 120, 121, or 365(c) to the application for which revival is sought.

(3) The provisions of paragraph (d)(1) of this section do not apply to applications for which revival is sought solely for purposes of copendency with a utility or plant application filed on or after June 8, 1995, to lapsed patents, or to reexamination proceedings.

(e) *Request for reconsideration.* Any request for reconsideration or review of a decision refusing to revive an abandoned application, a terminated reexamination proceeding, or lapsed patent upon petition filed pursuant to this section, to be considered timely, must be filed within two months of the decision refusing to revive or within such time as set in the decision. Unless a decision indicates otherwise, this time period may be extended under:

(1) The provisions of § 1.136 for an abandoned application or lapsed patent;

(2) The provisions of § 1.550(c) for a terminated *ex parte* reexamination proceeding filed under § 1.510; or

(3) The provisions of § 1.956 for a terminated *inter partes* reexamination proceeding filed under § 1.913.

(f) *Abandonment for failure to notify the Office of a foreign filing:* A nonprovisional application abandoned pursuant to 35 U.S.C. 122(b)(2)(B)(iii) for failure to timely notify the Office of the filing of an application in a foreign country or under a multinational treaty that requires publication of applications eighteen months after filing, may be revived only pursuant to paragraph (b) of this section. The reply requirement of paragraph (c) of this section is met by the notification of such filing in a foreign country or under a multinational treaty, but the filing of a petition under this section will not operate to stay any period for reply that may be running against the application.

(g) *Provisional applications.* A provisional application, abandoned for failure to timely respond to an Office requirement, may be revived pursuant to this section. Subject to the provisions of 35 U.S.C. 119(e)(3) and § 1.7(b), a provisional application will not be regarded as pending after twelve months from its filing date under any circumstances.

26.Section 1.138 is amended by revising paragraph (a) and adding paragraph (c) to read as follows:

§ 1.138 Express abandonment.

(a) An application may be expressly abandoned by filing a written declaration of abandonment identifying the application in the United States Patent and Trademark Office. Express abandonment of the application may not be recognized by the Office before the date of issue or publication unless it is actually received by appropriate officials in time to act.

* * * * *

(c) An applicant seeking to abandon an application to avoid publication of the application (see § 1.211(a)(1)) must submit a declaration of express abandonment by way of a petition under this section including the fee set forth in § 1.17(h) in sufficient time to permit the appropriate officials to recognize the abandonment and remove the application from the publication process. Applicant should expect that the petition will not be granted and the application will be published in regular course unless such declaration of express abandonment and petition are received by the appropriate officials more than four weeks prior to the projected date of publication.

27. Section 1.165 is amended by revising paragraph (b) to read as follows:

§ 1.165 Plant drawings.

* * * * *

(b) The drawings may be in color. The drawing must be in color if color is a distinguishing characteristic of the new variety. Two copies of color drawings or photographs and a black and white photocopy that accurately depicts, to the extent possible, the subject matter shown in the color drawing or photograph must be submitted.

28. A new, undesignated center heading and new §§ 1.211, 1.213, 1.215, 1.217, 1.219, and 1.221 are added to Subpart B-National Processing Provisions to read as follows:

Publication of Applications

§ 1.211 Publication of applications.

(a) Each U.S. national application for patent filed in the Office under 35 U.S.C. 111(a) and each international application in compliance with 35 U.S.C. 371 will be published promptly after the expiration of a period of eighteen months from the earliest filing date for which a benefit is sought under title 35, United States Code, unless:

(1) The application is recognized by the Office as no longer pending;

(2) The application is national security classified (see § 5.2(c)), subject to a secrecy order under 35 U.S.C. 181, or under national security review;

(3) The application has issued as a patent in sufficient time to be removed from the publication process; or

(4) The application was filed with a nonpublication request in compliance with § 1.213(a).

(b) Provisional applications under 35 U.S.C. 111(b) shall not be published, and design applications under 35 U.S.C. chapter 16 and reissue applications under 35 U.S.C. chapter 25 shall not be published under this section.

(c) An application filed under 35 U.S.C. 111(a) will not be published until it includes the basic filing fee (§ 1.16(a) or 1.16(g)), any English translation required by § 1.52(d), and an executed oath or declaration under § 1.63. The Office may delay publishing any application until it includes a specification having papers in compliance with § 1.52 and an abstract (§ 1.72(b)), drawings in compliance with § 1.84, and a sequence listing in compliance with §§ 1.821 through 1.825 (if applicable), and until any petition under § 1.47 is granted.

(d) The Office may refuse to publish an application, or to include a portion of an application in the patent application publication (§ 1.215), if publication of the application or portion thereof would violate Federal or state law, or if the application or portion thereof contains offensive or disparaging material.

(e) The publication fee set forth in § 1.18(d) must be paid in each application published under this section before the patent will be granted. If an application is subject to publication under this section, the sum specified in the notice of allowance under § 1.311 will also include the publication fee which must be paid within three months from the date of mailing of the notice of allowance to avoid abandonment of the application. This three-month period is not extendable. If the application is not published under this section, the publication fee (if paid) will be refunded.

§ 1.213 Nonpublication request.

(a) If the invention disclosed in an application has not been and will not be the subject of an application filed in another country, or under a multilateral international agreement, that requires publication of applications eighteen months after filing, the application will not be published under 35 U.S.C. 122(b) and § 1.211 provided:

(1) A request (nonpublication request) is submitted with the application upon filing;

(2) The request states in a conspicuous manner that the application is not to be published under 35 U.S.C. 122(b);

(3) The request contains a certification that the invention disclosed in the application has not been and will not be the subject of an application filed in another country, or under a multilateral international agreement, that requires publication at eighteen months after filing; and

(4) The request is signed in compliance with § 1.33(b).

(b) The applicant may rescind a nonpublication request at any time. A request to rescind a nonpublication request under paragraph (a) of this section must:

(1) Identify the application to which it is directed;

(2) State in a conspicuous manner that the request that the application is not to be published under 35 U.S.C. 122(b) is rescinded; and

(3) Be signed in compliance with § 1.33(b).

(c) If an applicant who has submitted a nonpublication request under paragraph (a) of this section subsequently files an application directed to the invention disclosed in the application in which the nonpublication request was submitted in another country, or under a multilateral international agreement, that requires publication of applications eighteen months after filing, the applicant must notify the Office of such filing within forty-five days after the date of the filing of such foreign or

international application. The failure to timely notify the Office of the filing of such foreign or international application shall result in abandonment of the application in which the nonpublication request was submitted (35 U.S.C. 122(b)(2)(B)(iii)).

§ 1.215 Patent application publication.

(a) The publication of an application under 35 U.S.C. 122(b) shall include a patent application publication. The date of publication shall be indicated on the patent application publication. The patent application publication will be based upon the application papers deposited on the filing date of the application, as well as the executed oath or declaration submitted to complete the application, and any application papers or drawings submitted in reply to a preexamination notice requiring a title and abstract in compliance with § 1.72, application papers in compliance with § 1.52, drawings in compliance with § 1.84, or a sequence listing in compliance with §§ 1.821 through 1.825, except as otherwise provided in this section. The patent application publication will not include any amendments, including preliminary amendments, unless applicant supplies a copy of the application containing the amendment pursuant to paragraph (c) of this section.

(b) If applicant wants the patent application publication to include assignee information, the applicant must include the assignee information on the application transmittal sheet or the application data sheet (§ 1.76). Assignee information may not be included on the patent application publication unless this information is provided on the application transmittal sheet or application data sheet included with the application on filing. Providing this information on the application transmittal sheet or the application data sheet does not substitute for compliance with any requirement of part 3 of this chapter to have an assignment recorded by the Office.

(c) At applicant's option, the patent application publication will be based upon the copy of the application (specification, drawings, and oath or declaration) as amended during examination, provided that applicant supplies such a copy in compliance with the Office electronic filing system requirements within one month of the actual filing date of the application or fourteen months of the earliest filing date for which a benefit is sought under title 35, United States Code, whichever is later.

(d) If the copy of the application submitted pursuant to paragraph (c) of this section does not comply with the Office electronic filing system requirements, the Office will publish the application as provided in paragraph (a) of this section. If, however, the Office has not started the publication process, the Office may use an untimely filed copy of the application supplied by the applicant under paragraph (c) of this section in creating the patent application publication.

§ 1.217 Publication of a redacted copy of an application.

(a) If an applicant has filed applications in one or more foreign countries, directly or through a multilateral international agreement, and such foreign-filed applications or the description of the invention in such foreign-filed applications is less extensive than the application or description of the invention in the application filed in the Office, the applicant may submit a redacted copy of the application filed in the Office for publication, eliminating any part or description of the invention that is not also contained in any of the corresponding applications filed in a foreign country. The Office will publish the application as provided in § 1.215(a) unless the applicant files a redacted copy of the application in compliance with this section within sixteen months after the earliest filing date for which a benefit is sought under title 35, United States Code.

(b) The redacted copy of the application must be submitted in compliance with the Office electronic filing system requirements. The title of the invention in the redacted copy of the application must correspond to the title of the application at the time the redacted copy of the application is submitted to the Office. If the redacted copy of the application does not comply with the Office electronic filing system requirements, the Office will publish the application as provided in § 1.215(a).

(c) The applicant must also concurrently submit in paper (§ 1.52(a)) to be filed in the application:

(1) A certified copy of each foreign-filed application that corresponds to the application for which a redacted copy is submitted;

(2) A translation of each such foreign-filed application that is in a language other than English, and a statement that the translation is accurate;

(3) A marked-up copy of the application showing the redactions in brackets; and

(4) A certification that the redacted copy of the application eliminates only the part or description of the invention that is not contained in any application filed in a foreign country, directly or through a multilateral international agreement, that corresponds to the application filed in the Office.

(d) The Office will provide a copy of the complete file wrapper and contents of an application for which a redacted copy was submitted under this section to any person upon written request pursuant to § 1.14(c)(2), unless applicant complies with the requirements of paragraphs (d)(1), (d)(2), and (d)(3) of this section.

(1) Applicant must accompany the submission required by paragraph (c) of this section with the following:

(i) A copy of any Office correspondence previously received by applicant including any desired redactions, and a second copy of all Office correspondence previously received by applicant showing the redacted material in brackets; and

(ii) A copy of each submission previously filed by the applicant including any desired redactions, and a second copy of each submission previously filed by the applicant showing the redacted material in brackets.

(2) In addition to providing the submission required by paragraphs (c) and (d)(1) of this section, applicant must:

(i) Within one month of the date of mailing of any correspondence from the Office, file a copy of such Office correspondence including any desired redactions, and a second copy of such Office correspondence showing the redacted material in brackets; and

(ii) With each submission by the applicant, include a copy of such submission including any desired redactions, and a second copy of such submission showing the redacted material in brackets.

(3) Each submission under paragraph (d)(1) or (d)(2) of this paragraph must also be accompanied by the processing fee set forth in § 1.17(i) and a certification that the redactions are limited to the elimination of material that is relevant only to the part or description of the invention that was not contained in the redacted copy of the application submitted for publication.

(e) The provisions of § 1.8 do not apply to the time periods set forth in this section.

§ 1.219 Early publication.

(a) Applications that will be published under § 1.211 may be published earlier than as set forth in § 1.211(a) at the request of the applicant.

Any request for early publication must be accompanied by the publication fee set forth in § 1.18(d). If the applicant does not submit a copy of the application in compliance with the Office electronic filing system requirements pursuant to § 1.215(c), the Office will publish the application as provided in § 1.215(a). No consideration will be given to requests for publication on a certain date, and such requests will be treated as a request for publication as soon as possible.

§ 1.221 Voluntary publication or republication of patent application publication.

(a) Any request for publication of an application filed before, but pending on, November 29, 2000, and any request for republication of an application previously published under § 1.211, must include a copy of the application in compliance with the Office electronic filing system requirements and be accompanied by the publication fee set forth in § 1.18(d) and the processing fee set forth in § 1.17(i). If the request does not comply with the requirements of this paragraph or the copy of the application does not comply with the Office electronic filing system requirements, the Office will not publish the application and will refund the publication fee.

(b) The Office will grant a request for a corrected or revised patent application publication other than as provided in paragraph (a) of this section only when the Office makes a material mistake which is apparent from Office records. Any request for a corrected or revised patent application publication other than as provided in paragraph (a) of this section must be filed within two months from the date of the patent application publication. This period is not extendable.

29.Section 1.291 is amended by revising paragraph (a)(1) to read as follows:

§ 1.291 Protests by the public against pending applications.

(a) * * *

(1) The protest is submitted prior to the date the application was published or the mailing of a notice of allowance under § 1.311, whichever occurs first; and

* * * * *

30. Section 1.292 is amended by revising paragraph (b)(3) to read as follows:

§ 1.292 Public use proceedings.

* * * * *

(b) * * *

(3) The petition is submitted prior to the date the application was published or the mailing of a notice of allowance under § 1.311, whichever occurs first.

* * * * *

31. Section 1.311 is revised to read as follows:

§ 1.311 Notice of allowance.

(a) If, on examination, it appears that the applicant is entitled to a patent under the law, a notice of allowance will be sent to the applicant at the correspondence address indicated in § 1.33. The notice of allowance shall specify a sum constituting the issue fee which must be paid within three months from the date of mailing of the notice of allowance to avoid abandonment of the application. The sum specified in the notice of allowance may also include the publication fee, in which case the issue fee and publication fee (§ 1.211(f)) must both be paid within three months from the date of mailing of the notice of allowance to avoid abandonment of the application. This three-month period is not extendable.

(b) An authorization to charge the issue or other post-allowance fees set forth in § 1.18 to a deposit account may be filed in an individual application only after mailing of the notice of allowance. The submission of either of the following after the mailing of a notice of allowance will operate as a request to charge the correct issue fee to any deposit account identified in a previously filed authorization to charge fees:

(1) An incorrect issue fee; or

(2) A completed Office-provided issue fee transmittal form (where no issue fee has been submitted).

32. A new § 1.417 is added to read as follows:

§ 1.417. Submission of translation of international application.

The submission of the international publication or an English language translation of an international application pursuant to 35 U.S.C. 154(d)(4) must clearly identify the international application to which it pertains (§ 1.5(a)) and, unless it is being submitted pursuant to § 1.494 or § 1.495, be clearly identified as a submission pursuant to 35 U.S.C. 154(d)(4). Otherwise, the submission will be treated as a filing under 35 U.S.C. 111(a). Such submissions should be marked ''Box PCT.''

33. Section 1.494 is amended by revising paragraph (f) to read as follows:

§ 1.494 Entering the national stage in the United States of America as a Designated Office.

* * * * *

(f) The documents and fees submitted under paragraphs (b) and (c) of this section must, except for a copy of the international publication or translation of the international application that is identified as provided in § 1.417, be clearly identified as a submission to enter the national stage under 35 U.S.C. 371. Otherwise, the submission will be considered as being made under 35 U.S.C. 111(a).

* * * * *

34. Section 1.495 is amended by revising paragraph (g) to read as follows:

§ 1.495 Entering the national stage in the United States of America as an Elected Office.

* * * * *

(g) The documents and fees submitted under paragraphs (b) and (c) of this section must, except for a copy of the international publication or translation of the international application that is identified as provided in § 1.417, be clearly identified as a submission to enter the national stage under 35 U.S.C. 371. Otherwise, the submission will be considered as being made under 35 U.S.C. 111(a).

* * * * *

PART 5—SECRECY OF CERTAIN INVENTIONS AND LICENSES TO EXPORT AND FILE APPLICATIONS IN FOREIGN COUNTRIES

35. The authority citation for 37 CFR part 5 is revised to read as follows:

Authority: 35 U.S.C. 2(b)(2), 41, 181–188, as amended by the Patent Law Foreign Filing Amendments Act of 1988, Pub. L. 100–418, 102 Stat. 1567; the Arms Export Control Act, as amended, 22 U.S.C. 2751 *et seq.*; the Atomic Energy Act of 1954, as amended, 42 U.S.C. 2011 *et seq.*; the Nuclear Non Proliferation Act of 1978, 22 U.S.C. 3201 *et seq.*; and the delegations in the regulations under these Acts to the Commissioner (15 CFR 370.10(j), 22 CFR 125.04, and 10 CFR 810.7).

36. Section 5.1 is amended by revising paragraph (e) to read as follows:

§ 5.1 Applications and correspondence involving national security.

* * * * *

(e) An application will not be published under § 1.211 of this chapter or allowed under § 1.311 of this chapter if publication or disclosure of the application would be detrimental to national security. An application under national security review will not be published at least until six months from its filing date or three months from the

date the application was referred to a defense agency, whichever is later. A national security classified patent application will not be published under § 1.211 of this chapter or allowed under § 1.311 of this chapter until the application is declassified and any secrecy order under § 5.2(a) has been rescinded.

Dated: September 12, 2000.

Q. Todd Dickinson,

Under Secretary of Commerce for Intellectual Property and Director of the United States Patent and Trademark Office.

[FR Doc. 00–23822 Filed 9–19–00; 8:45 am]

BILLING CODE 3510–16–P

Federal Register

Wednesday,
September 20, 2000

Part IV

Department of Commerce

Economic Development Administration

Economic Adjustment Assistance; Availability of Funds for Norton Sound, Alaska; Notice

DEPARTMENT OF COMMERCE

Economic Development Administration

[Docket No. 000901251–0251–01]

RIN 0610–ZA16

Economic Adjustment Assistance; Availability of Funds for Norton Sound, Alaska

AGENCY: Economic Development Administration (EDA), Department of Commerce (CoC).

ACTION: Funding notice.

SUMMARY: The Economic Development Administration (EDA) announces the availability of $10.0 million for economic adjustment assistance in response to the August 8, 2000, Disaster Declaration by the Secretary of Commerce under the Section 312(a) of the Magnuson-Stevens Fishery Conservation and Management Act and under Section 308(b) of the Interjurisdictional Fisheries Act for communities in the Norton Sound region of Alaska. Eligible activities include planning, technical assistance, revolving loan funds, and infrastructure grants to address the economic adjustment problems of communities adversely affected by the Norton Sound fisheries disaster. Eligible areas and organizations representing areas include, but are not limited to: Unalakleet, Shaktoolik, Koyuk, Elim, Golovin, Nome, White Mountain, Stebbins, St. Michael, other nearby member communities of the Norton Sound Economic Development Corporation, the local Community Development Quota Organization, Teller, Diomede, Savoonga, Gambell, Brevig Mission, Wales, and the Village of Kotlik.

DATES: No awards will be made prior to fiscal year 2001, which begins October 1, 2000. However, proposals and applications will be accepted on a continuous basis beginning September 1, 2000.

ADDRESSES: A. Leonard Smith, Regional Director, Seattle Regional Office, Suite 1856, Jackson Federal Building 915 Second Avenue, Seattle Washington 98174; Intenet Address: *LSmith7@doc.gov.* Bernard E. Richert, Jr., Economic Development Representative (EDR), 550 West Seventh Avenue, Suite 1780, Anchorage, Alaska 99501–7594; Internet Address: *brichert@doc.gov berney@alaska.net*

FOR FURTHER INFORMATION CONTACT: Interested parties should contact the Seattle Regional Office or the Economic Development Representative for Alaska as follows: A. Leonard Smith, Regional Director, Seattle Regional Office, Telephone: (206) 220–7660; Bernard E. Richert, Jr., Economic Development Representative (EDR), Telephone: (907) 271–2272; fax: 907–271–2274.

SUPPLEMENTARY INFORMATION:

Economic Adjustment Assistance

(Catalog of Federal Domestic Assistance (CFDA) No. 11.307)

Funding Availability

Funds in the amount of $10.0 million are available and shall remain available until expended. These funds are provided under Agriculture, Rural Development, Food and Drug Administration, and Related Agencies Appropriations Act, 2000 (PL 106–78, Sec. 817), October 22, 1999, to be transferred to the Department of Commerce and administered under Section 209 of the Public Works and Economic Development Act of 1965, as amended (PWEDA).

Eligibility

Information on eligibility requirements for applicants and areas can be found in EDA's regulation at 13 CFR, Chapter III.

Grant Rates

Grant rates, as established under PWEDA and regulations at 13 CFR 301.4(b) may vary, if permitted by PWEDA and its implementing regulations, and may depend upon factors such as types of applicant, relative needs and financial capacity of applicants.

Selection Process

EDA will review proposals to evaluate eligibility, evaluation criteria, and funding priorities before inviting a full application for final funding consideration. It is anticipated that proposals will exceed the amount of funding available. Interested parties should submit proposals directly to the EDR for Alaska or to the Seattle Regional Office (see ''For Further Information'') using the standard preapplication form for EDA assistance (ED–900P, OMB Control No. 0610–0094).

EDA will evaluate project proposals in accordance with, as appropriate, 13 CFR Part 304, 13 CFR 308.4 (65 FR 2530 at 2532, January 18, 2000), and the criteria will be approximately of equal importance.

Proposals under this funding announcement must demonstrate how the EDA assistance will help the eligible area recover from the economic adjustment problems caused by the fisheries failure. Proposals for implementation grants must also demonstrate that the request for assistance has been preceded by sound planning, consistent with EDA regulations at 13 CFR 301.3.

In meeting EDA requirements for a strategy or Comprehensive Economic Development Strategy, EDA may accept for example: a State Emergency Recovery Plan, or the product of an equivalent state or local strategic economic recovery planning process with short-term and long-term goals.

Given the limited funds available from this appropriation, the amount awarded will be relative to the amount of economic distress/damage sustained by the community (applicants must be able to demonstrate need based on economic distress/damage resulting from the disaster).

EDA will consider the following funding priorities which will be the basis for selecting applications to be funded under this Notice. Priority numbers (1) and (2) are roughly equivalent and more important than the others. The funding priorities are as follows:

1. Projects located in areas that suffered the highest levels of economic injury, as a result of the disaster, as compared to other disaster areas.
2. Projects located in disaster impacted areas that had previously been experiencing high levels of economic distress.
3. Projects which leverage EDA funds with state, local, private, and other Federal assistance efforts.
4. Projects that restore, upgrade or enhance the reliability of critical infrastructure/public facilities to current building, environmental, and safety standards or codes, and are essential to stabilizing the economic base of the disaster area.
5. Projects that enhance/stimulate sustainable economic development and/or otherwise mitigate the physical and/or economic dislocation that could be caused by recurring future disaster.
6. Projects that assist the restoration of businesses, stimulate the development of new businesses and accelerate the development of new job opportunities for dislocated individuals within the affected areas.
7. Projects that enhance opportunities for economic diversification.

Other Information and Requirements

EDA regulations at 13 CFR Chapter III and 65 FR 2530, January 18, 2000, are available from EDA offices listed in the Addresses Section and from the EDA web site at www.doc.gov/eda.

Certain Departmental and other requirements are noted below.

Additional information is available through links to EDA's web site at www.doc.gov/eda or from the appropriate EDA office listed in Addresses Section.

A. Notwithstanding any other provision of law, no person is required to respond to, nor shall a person be subject to a penalty for failure to comply with a collection of information subject to the requirements of the Paperwork Reduction Act (PRA) unless that collection of information displays a current valid Office of Management and Budget (OMB) control number. This notice involves a collection of information requirement subject to the provisions of the PRA and has been approved by OMB under Control Number 0610–0094.

B. All primary applicants must submit a completed Form CD–511, ''Certifications Regarding Debarment, Suspension and Other Responsibility Matters; Drug-Free Workplace Requirements and Lobbying,'' and the following explanations are hereby provided: Prospective participants (as defined at 15 CFR Part 26, Section 105) are subject to ''Nonprocurement Debarment and Suspension'' and the related section of the certification form prescribed above applies;

Grantees (as defined at 15 CFR Part 26, Section 605) are subject to 15 CFR Part 26, Subpart F, ''Drug-Free Workplace Requirements (Grants)'' and the related section of the certification form prescribed above applies;

Persons (as defined at 15 CFR Part 28, Secton 105) are subject to the lobbying provisions of 31 U.S.C. 1352, ''Limitation on use of appropriated funds to influence certain Federal contracting and financial transactions,'' and the lobbying section of the certification form prescribed above applies to applications/bids for grants, cooperative agreements, and contracts for more than $100,000, and loans and loan guarantees for more than $150,000, or the single family maximum mortgage limit for affected programs, whichever is greater; and

C. Any applicant that has paid or will pay for lobbying using any funds must submit an SF–LLL, ''Disclosure of Lobbying Activities,'' as required under 15 CFR Part 28, Appendix B.

D. The implementing regulations of the National Environmental Policy Act require EDA to provide public notice of the availability of project specific environmental documents such as environmental impact statements, environmental assessments, findings of no significant impact, records of decision, etc., to the affected public as specified in 40 CFR 1506.6(b).

Depending on the project location, environmental information concerning specific projects can be obtained from the Regional Environmental Officer in the appropriate EDA regional office listed in the Addresses section.

E. Recipients shall require applicants/bidders for subgrants, contracts, subcontracts, or other lower tier covered transactions at any tier under the award to submit, if applicable, a completed Form CD–512, ''Certifications Regarding Debarment, Suspension, Ineligibility and Voluntary Exclusion-Lower Tier Covered Transactions and Lobbying'' and disclosure form, SF–LLL ''Disclosure of Lobbying Activities.'' Form CD–512 is intended for the use of recipients and should not be transmitted to DoC. SF–LLL submitted by any tier recipient or subrecipient should be submitted to DoC in accordance with the instructions contained in the award document.

F. No award of Federal funds will be made to an applicant who has an outstanding delinquent Federal debt until either:

1. The delinquent account is paid in full;

2. A negotiated repayment schedule is established and at least one payment is received; or

3. Other arrangements satisfactory to DoC are made.

G. Unsatisfactory performance under prior Federal awards may result in an application not being considered for funding.

H. Applicants should be aware that a false statement on the application is grounds for denial of the application or termination of the grant award and grounds for possible punishment by a fine or imprisonment as provided in 18 U.S.C. 1001.

I. Applicants are hereby notified that any equipment or products authorized to be purchased with funding provided under this program must be American-made to the maximum extent feasible.

J. Applicants seeking an early start, *i.e.*, to begin a project before EDA approval, must obtain a letter from EDA allowing such early start. The letter allowing the early start will be null and void if the project is not subsequently approved for funding by the grants officer. Approval of an early start does not constitute project approval. Applicants should be aware that if they incur any costs prior to an award being made they do so solely at their own risk of not being reimbursed by the Government. Notwithstanding any verbal or written assurance that may have been received, there is no obligation on the part of DoC to cover preaward costs. Additionally, EDA also requires that compliance with environmental regulations, in accordance with NEPA, be completed before construction begins.

K. If an application is selected for funding, EDA has no obligation to provide any additional future funding in connection with an award. Renewal of an award to increase funding or extend the period of performance is at the sole discretion of EDA.

L. Unless otherwise noted below, eligibility, program objectives, application procedures, selection procedures, evaluation criteria and other requirements for all programs are set forth in EDA's regulations at 13 CFR Chapter III and 65 FR January 18, 2000.

M. EDA is not authorized to provide any financial assistance directly to individuals for the purpose of starting a new business or expanding an existing business.

This Notice has been determined to be not significant for purposes of Executive Order 12866.

Dated: September 14, 2000.

Arthur C. Campbell,

Assistant Secretary for Economic Development.

[FR Doc. 00–24063 Filed 9–19–00; 8:45 am]

BILLING CODE 3510–24–M

Federal Register

Wednesday,
September 20, 2000

Part V

Department of Justice

Office of Justice Programs

Proposed Program Guidelines for the Victims of Crime Act Victim Compensation Grant Program; Notice

DEPARTMENT OF JUSTICE

Office of Justice Programs

[OJP(OVC)–1289]

Proposed Program Guidelines for the Victims of Crime Act Victim Compensation Grant Program

AGENCY: Office for Victims of Crime, Office of Justice Programs, Justice.

ACTION: Proposed program guidelines and request for comments.

SUMMARY: The Office for Victims of Crime (OVC), United States Department of Justice (DOJ) is publishing Proposed Program Guidelines to implement the victim compensation grant program as authorized by the Victims of Crime Act of 1984 (VOCA), as amended, 42 U.S.C. 10601, *et seq.*

Solicitation of Comments: The public is invited to provide comments to these Proposed Program Guidelines. All comments must be sent (either by conventional mail or electronic mail) to Carol R. Watkins, Director, State Compensation and Assistance Division, 810 Seventh Street, N.W., Washington, D.C. 20531; E-mail: *watkinsc@ojp.usdoj.gov.* Comments must be received no later than October 20, 2000.

FOR FURTHER INFORMATION CONTACT: Carol R. Watkins, Director, State Compensation and Assistance Division, 810 Seventh Street, N.W., Washington, D.C. 20531; phone: (202) 514–4696. (This is not a toll-free number). E-mail: *watkinsc@ojp.usdoj.gov*

SUPPLEMENTARY INFORMATION: VOCA provides federal financial assistance to states for the purpose of compensating and assisting crime victims, providing funds for training and technical assistance, and assisting victims of Federal crimes. These Proposed Program Guidelines provide information specifically with regard to the administration and implementation of the VOCA victim compensation grant program as authorized in Section 1403 of VOCA, Public Law 98–473, as amended, codified at 42 U.S.C. 10602.

Administrative Requirements

Paperwork Reduction Act

OVC certifies that these Proposed Program Guidelines will not impose additional reporting or recordkeeping requirements under the Paperwork Reduction Act of 1995 (44 U.S.C. 3501 *et seq.*).

Summary of Proposed Changes to the 1997 Guidelines

A. Introduction

These Proposed Program Guidelines, which revise the previously issued Victims of Crime Act Victim Compensation Grant Program Final Program Guidelines (1997 Guidelines), 62 FR 7050–03 (Feb. 14, 1997), 1997 WL 60136, are in accordance with VOCA. These Proposed Program Guidelines are all inclusive. Thus, they supersede any Guidelines previously issued by OVC, including the previously issued 1997 Guidelines. The changes contained in these Proposed Program Guidelines result from developments in the criminal justice and victim services fields since the 1997 Guidelines were issued and from an extensive solicitation of feedback from the field.

B. Encouraged Changes in Coverage by States

OVC acknowledges that the range of compensable expenses varies based upon a state's particular program statute, rulemaking, policy, or procedure. In addition to the crimes and expenses mandated by VOCA, OVC encourages states to cover additional victims and expenses not previously considered in the 1997 Guidelines.

In particular, these Proposed Program Guidelines encourage states to use their *state* compensation funds for crimes not traditionally funded by state programs; i.e., crimes that involve threat but not actual physical injury or death; economic crime; crimes against United States residents abroad and on international waters; and crimes perpetrated through technology such as child exploitation, stalking, cybercrime, and fraud over the Internet.

These Proposed Program Guidelines would encourage states to cover victims of crime who have not been physically injured or killed but who have been threatened with injury or death. Such changes would, for example, allow for the coverage of victims of stalking, bank robbery, hate crime, workplace violence, and others who have escaped injury but have experienced the trauma of the event. See Section IV.B.1.

Federal and state governments have increased the investigation and prosecution of economic crime particularly telemarketing fraud, insurance scams, identity fraud, and exploitation of the elderly. Concurrently, victim services professionals have identified the need to develop resources to respond to these victims. As a result, OVC is clarifying in these Proposed Program Guidelines that *VOCA does not prohibit states from providing such coverage for victims of nonviolent crime.* Because of this, these Proposed Program Guidelines encourage states to develop their own guidelines when compensating victims for a range of compensable expenses resulting from economic crime, including mental health counseling and financial planning. *However,* in state certifications used to capture VOCA funds, the only actual property damage or loss that apply are crime scene clean-up, clothing and bedding taken for evidence, and replacement or repair of window(s) and locks.

OVC encourages states to expand coverage to victims of crimes perpetrated through technology. Compensation programs have traditionally covered face to face crimes, but through the Internet, stalking, child exploitation, fraud and other crimes can be perpetrated without the victim meeting the offender. In addition, these cases may be multijurisdictional and so navigating the criminal justice system can be more complex than usual for the victim. As the criminal justice system increasingly directs resources to these crimes, *state* crime victim compensation programs must build a capacity to adapt to the needs of victims of these crimes. Section IV.B.1.a.

These Proposed Program Guidelines encourage additional states to cover residents victimized by crime while outside the territorial jurisdiction of the United States (*e.g.,* in foreign countries or on international waters) where no other crime victim compensation program exists. While VOCA requires that state compensation programs cover their residents who are victims of *terrorism* outside of the territorial jurisdiction of the United States, it is silent on the issue of residents who are victims of other (non-terrorist) crimes committed while they are outside the territorial jurisdiction of the United States. OVC encourages state coverage of these victims to assure that business persons, tourists, students, and others can access compensation when needed. See Section III.B.4.

In addition, proposed changes contained in these Proposed Program Guidelines encourage increased collaboration, cooperation, and coordination between states and other organizations serving crime victims, including participation in criminal crisis response teams. OVC encourages states to increase coordination with VOCA victim assistance programs, worker's compensation programs, Medicaid, and other such programs that provide financial assistance and services to crime victims.

C. Proposed Substantive Changes and Clarifications

These Proposed Program Guidelines also propose several substantive changes to the 1997 Guidelines, in light of recent legislative amendments to VOCA. These Proposed Program Guidelines also propose several clarifications to provisions previously set out in the 1997 Guidelines.

First, in light of substantive amendments to VOCA with regard to the distribution of funds, under certain conditions, additional VOCA monies are made available for Child Abuse Prevention and Treatment Grants. Also, because of recent VOCA amendments, the VOCA distribution formula now provides an allowance for the earmarking of funds by Congress annually to be made available for the benefit of crime victims in the Federal criminal justice system.

Second, in light of other recent substantive amendments to VOCA, regarding coverage for compensable crimes, these Proposed Program Guidelines mandate coverage of crimes that involve personal injury or death resulting from certain crimes related to religious real property and the obstruction of the free practice of religion when these crimes are covered by interstate or foreign commerce. In addition, the provision covers crimes which involve personal injury or death resulting from certain crimes related to religious real property because of the race, color, or ethnic characteristics of any individual associated with the property. See Section IV.B.1.a.

Third, these Proposed Program Guidelines contain several changes in requirements from and clarifications to the previous 1997 Guidelines. Administrative cost provisions in these Proposed Guidelines make clear that no state match is required if the state chooses to use up to 5% for such costs and supplantation is clarified as it applies to administrative cost. Also, allowable costs covered by administrative funds are expanded to include monitoring, membership in associations other than crime victim compensation associations, and use of technology to automate claims processing and allow for Internet access to the program by crime victims. Finally, OVC proposes to allow use of administrative funds for the development and coordination of criminal crisis response teams. See Section VII. A & B.

Fourth, a further clarification in these Proposed Program Guidelines, from the 1997 Guidelines, pertains to ''means testing'' required under VOCA. Under ''means testing,'' VOCA prohibits Federal, state, or local government programs that use Federal funds from including victim compensation benefits when determining income eligibility for an applicant, until the total amount of medical or other assistance that the applicant receives from all programs is sufficient to fully compensate the applicant for losses suffered as a result of the crime. Under VOCA, the OVC Director is given the authority to determine whether such medical or other assistance is needed by an applicant. Through these Proposed Program Guidelines, the Director's authority would be delegated to state VOCA compensation administrators. This proposed clarification regarding ''means testings'' affects Medicaid, Veteran's Administration, Supplemental Security Income and other programs. See Section IV.C.1.

Fifth, these Proposed Program Guidelines propose to supplement information in the 1997 Guidelines regarding state compensation program coverage of international terrorism and of the VOCA Emergency Reserve Fund. These Proposed Program Guidelines propose to include information required of state programs in applying for supplemental grants. See Sections II.A.3.d and IX. In addition, OVC proposes to encourage states to cover additional expenses that crime victims of international terrorism face.

Sixth, these Proposed Program Guidelines propose to supplement information in the 1997 Guidelines regarding compensable expenses under VOCA, specifically pertaining to any medically-necessary building adaptations or modifications. These Proposed Program Guidelines propose to include information regarding requirements for compliance with the National Historic Preservation Act,16 U.S.C. § 470 *et seq.*, when a compensation applicant wishes to use VOCA funds for making minor building adaptations or modifications.

Finally, these Proposed Program Guidelines add new definitions to those previously delineated in the 1997 Guidelines. Furthermore, other definitions in these Proposed Program Guidelines serve to reiterate or clarify those contained in the 1997 Guidelines.

D. Proposed Technical Changes

These Proposed Program Guidelines propose several technical changes to the 1997 Guidelines, also. Specifically, the 1997 Guidelines included financial requirements that, within the Office of Justice Programs (OJP), come under the oversight and responsibility of OJP's Office of the Comptroller. While these financial requirements remain fully in effect, in order to eliminate redundancy and duplication of responsibility, these Proposed Program Guidelines require states to comply with the *OJP Financial Guide* but do not duplicate the contents of that Guide.

Similarly, the 1997 Guidelines included civil rights requirements that, within the Office of Justice Programs (OJP), come under the responsibility of OJP's Office for Civil Rights (OCR). While these nondiscrimination and other civil rights requirements remain fully in effect, in order to eliminate redundancy and duplication of responsibility, these Proposed Program Guidelines recite the language contained in the nondiscrimination provision in VOCA.

There are several additional technical revisions to these Proposed Program Guidelines, which depart from the format of the 1997 Guidelines. These proposed changes, however, would not affect policy or implementation of VOCA victim compensation program provisions. Rather, they are intended to reorganize information in these Proposed Program Guidelines for ease of reference and use.

Summary Outline of Proposed Program Guidelines

These Proposed Program Guidelines contain the following subject matter areas broken down as follows:

I. Definitions;
II. Background and State Regulations;
III. Funding Allocations;
IV. State Eligibility Criteria;
V. State Certification;
VI. Application Process;
VII. Administrative Costs;
VIII. Financial Requirements;
IX. Mass Violence and Terrorism;
X. Monitoring; and
XI. Suspension and Termination of Funding.

Guidelines for Crime Victim Compensation Grants

I. Definitions

A. *Child Exploitation.* The sexual victimization of a minor under the age of 18 involving child pornography, child prostitution, or computer solicitation. Child exploitation does not necessarily involve commercial or monetary gain.

B. *Cybercrime.* For purposes of these Guidelines, cybercrime is a crime in which computers are used to facilitate traditional criminal activity (*e.g.*, fraud, stalking, child exploitation or extortion).

C. *Driving While Intoxicated.* This includes drunk driving and driving under the influence of alcohol and/or other drugs.

D. *Federal Crime.* A Federal crime is any crime that is a violation of the United States Criminal Code or Federal regulations. In general, Federal crimes are investigated by Federal law enforcement agencies including the Federal Bureau of Investigation (FBI), Drug Enforcement Administration (DEA), Bureau of Alcohol, Tobacco and Firearms (ATF), U.S. Postal Service, Department of Interior, Secret Service, Customs Service, Immigration and Naturalization Service (INS), and the investigative agencies of the military services. Federal crimes are prosecuted in Federal District Courts by United States Attorneys' Offices. Some examples of Federal crimes include crimes:

1. against Federal officials;
2. that take place on Federal property, including national parks or military bases, certain maritime or territorial jurisdictions, and buildings owned or leased by the Federal government;
3. like bank robbery where the bank is insured or otherwise secured by the Federal government;
4. acts involving interstate activities, such as kidnaping, interstate domestic violence, or mail, telephone, or wire fraud; and
5. on Indian Country or reservations, where the Federal government has criminal jurisdiction over the crimes.

E. *Hate Crimes.* Crimes that manifest evidence of prejudice based on race, religion, physical or mental disability, sexual orientation, gender, ethnicity, national origin, color, creed or ancestry.

F. *Mass Violence.* Violence inflicted on a large number of persons, without regard to whether the act is related to terrorism.

G. *Mental Health Counseling and Care.* Mental health counseling and care means the assessment, diagnosis, and treatment of an individual's mental and emotional functioning that is required to alleviate psychological trauma resulting from a compensable crime. Such intervention must be provided by a person who meets such standards as may be set by the state for victim mental health counseling and care.

H. *Native American Tribe, Indian Tribe or Organization.* Any tribe, band, nation, or other organized group or community, including any Alaska native village or regional or village corporation as defined in or pursuant to the Alaska Native Claims Settlement Act [43 U.S.C.A.§ 1601, *et seq.*], which is recognized as eligible for the special programs and services provided by the United States to Native Americans because of their status as Indians.

I. *Property Damage and Loss.* Property damage is damage to material goods. Property loss is destruction of material goods or loss of money, stocks, bonds, etc.

J. *Reservation.* A tract of land set aside for use of, and occupancy by, Native Americans.

K. *Restitution.* Payment made by the offender to the victim who was injured or killed in the crime. Restitution, however, does not refer to the general collection of fines, fees and other penalties from offenders which provide the basic revenue for the compensation program and are not identifiable to reimbursement of payouts on a specific claim.

L. *Terrorism.* A violent act or an act dangerous to human life that is a violation of the criminal laws of the United States or of any state, or that would be a criminal violation if committed within the jurisdiction of the United States or any state, and appears to be intended to intimidate or coerce a civilian population, to influence the policy of a government by intimidation or coercion, or to affect the conduct of a government by assassination or kidnaping.

II. Background and State Regulations

In 1984, the Victims of Crime Act (VOCA) established the Crime Victims Fund (Fund) in the United States Treasury to receive deposits from fines, penalties, and bond forfeitures levied on criminals convicted of federal crimes. The Fund is administered by OVC to support the activities mandated by VOCA.

OVC makes annual VOCA crime victim compensation grants from the Fund to eligible states and territories. The primary purpose of these grants is to supplement state efforts to provide financial assistance and reimbursement to crime victims throughout the Nation for costs associated with the crime, and to encourage victim cooperation and participation in the criminal justice system.

States must have in place statutes and/or written rulemakings, policies, or procedures by which compensation programs operate. With the exception of most property damage or loss, state crime victim compensation programs may use VOCA compensation grant funds to pay for eligible expenses allowed by state compensation statute, rulemakings, policies, or procedures.

III. Funding Allocations

A. *Distribution.* The amount of funds available for distribution each year is dependent upon the total deposits into the Fund in the preceding federal fiscal year. By statute, deposits are to be allocated as follows:

1. Child Abuse Prevention and Treatment Grants. Up to $20 million [1] of the first amounts deposited in the Fund is allocated to Child Abuse Prevention and Treatment Grants. 85% of these funds are forwarded to the Department of Health and Human Services. The remaining 15% is retained by the Office for Victims of Crime to assist Native American Indian tribes in developing, establishing and operating programs designed to improve:

a. The handling of child abuse cases, particularly cases of child sexual abuse, in a manner which limits additional trauma to the child victim; and

b. The investigation and prosecution of cases of child abuse, particularly child sexual abuse.

2. Federal Criminal Justice System. Specific amounts are earmarked by Congress annually to be made available for improving services for the benefit of crime victims in the Federal criminal justice system.

3. Remaining Fund Deposits. The remaining fund deposits are to be distributed as follows:

a. Victim Compensation Grants. 48.5 percent are available to eligible state programs for crime victim compensation.

b. Victim Assistance Grants. 48.5 percent are available to states for victim assistance grants. Unused funds from the victim compensation portion of the deposits are added to this amount.

c. Discretionary Grants. 3 percent is available to OVC for demonstration projects, training and technical assistance grants and for the financial support of services to victims of Federal crime.

d. Emergency Reserve Funds. If monies in the Fund are sufficient to fully provide VOCA grants to the States, and deposits total 110% of the previous fiscal year, the OVC director may retain up to $50,000,000 in an emergency reserve fund. These funds are to be used for:

(1) Use for Victims of Terrorism Outside the United States. Reserve funds may be used to award supplemental grants to States at the discretion of the OVC Director, to provide compensation and assistance to state residents who are victims of terrorism while outside the country. Victims are not eligible for these funds

[1] In any fiscal year in which Fund deposits are greater than the amount deposited in Fiscal Year 1998, an amount equal to 50 percent of the increase in the amount from fiscal year 1998 shall be available for Child Abuse Prevention and Treatment Grants in addition to the base amount of $10 million. The total amount allocated for Child Abuse Prevention and Treatment grants for any fiscal year can not exceed $20 million.

if they are covered for compensation under Title VIII of the Omnibus Diplomatic Security and Antiterrorism Act of 1986. Consequently, persons who are taken captive because of their relationship with the U.S. Government as a member of the U.S. Civil Service, as well as other U.S. citizens, nationals, or resident aliens who are taken captive while rendering service to the U.S. similar to that of civil servants are not eligible for VOCA compensation. Similarly, dependent family members of such persons are not eligible for VOCA compensation.

(2) Use for Victims of Terrorism Within the United States. Reserve funds may be used to award supplemental grants to states at the discretion of the OVC Director, to provide compensation and assistance to victims of terrorism and mass violence within their states. These supplemental grants are to provide emergency relief, including crisis response efforts, assistance, training, and technical assistance. Reserve funds may also be provided to United States Attorney's Offices for use in coordination with state victim compensation and assistance efforts in providing emergency relief for domestic terrorism and mass casualty victims.

(3) Use for State Compensation and Assistance Programs. Reserve funds may be used to supplement basic state compensation and assistance awards, at the discretion of the OVC Director. The OVC Director may also use the Reserve Fund to offset fluctuations in Fund deposits for state compensation and assistance programs.

B. *Grant Period.* Victim compensation grant funds are available for expenditure throughout the fiscal year (FY) of award plus the next three fiscal years. The federal fiscal year (FFY) begins on October 1 and ends on September 30. State crime victim compensation programs may pay compensation claims retroactively to October 1, even though the VOCA grant may not be awarded until later in the grant period.

C. *Grant Deobligations.* When State grantees fail to obligate all funds by the end of a grant period, deobligated amounts up to a total of $500,000, are returned to the Fund. Deobligated amounts in excess of $500,000 are deposited into the U.S. Treasury for other Federal government purposes.

D. *Availability of Funds:* VOCA Victim Compensation Grant Formula. The Director of OVC is required to make an annual grant to eligible crime victim compensation programs that is equal to 40 percent of the amount awarded by the state program to victims of crime from state revenues during the fiscal year preceding the year of deposits in the Fund (two years prior to the grant year). If the amount in the Fund is insufficient to award each state 40 percent of its prior year's compensation payout from state revenues/contributions, all states will be awarded the same reduced percentage of their prior year payout from the available funds.

To determine the amount available, each state must submit with its annual application a certification of the amount expended in the year preceding deposits into the Fund. Amounts paid to compensate victims for property damage or loss cannot be included in the state's certification unless the payment falls within these exceptions: (1) Replacement or repair of windows and locks; (2) crime scene clean-up; and (3) the replacement of emergency items such as prescription medicines, eyeglasses and other minimal costs associated with the replacement of items that have been taken as evidence.

IV. State Eligibility Criteria

A. *Grantee.* The grantee must be an operational state-administered crime victim compensation program. The term ''state'' includes the District of Columbia, the Virgin Islands, Guam and any other possession or territory of the United States. A new compensation program is entitled to a VOCA grant after it has awarded benefits that can be matched under VOCA. VOCA may not be used as ''start-up'' funds for a new state compensation program. In the event that a state chooses to administer this program in a de-centralized fashion, the state remains accountable to VOCA for expenditure of these funds.

B. *Program Requirements.* For a state to meet or maintain eligibility for a crime victims compensation grant, it must satisfy the following requirements:

1. Compensable Crimes and Expenses.

(a) *Crimes.* At a minimum, VOCA specifically requires the grantee to offer compensation to crime victims and survivors of victims of criminal violence compensation for certain identified expenses (see below) resulting from physical injury from a ''compensable crime'' as defined by the state. VOCA requires that states include as compensable crimes those crimes whose victims suffer death or personal injury as a result of terrorism, driving while intoxicated, and domestic violence.

In addition, VOCA *requires* that states include as compensable crimes those crimes whose victims suffer death or personal injury as a result of the intentional or attempted defacement, damage, or destruction of any religious real property because of its religious character or the obstruction, by force or threat of force, any persons' enjoyment of the free exercise of religious beliefs when the crime is covered by interstate or foreign commerce. VOCA also requires that states include as compensable crimes those crimes whose victims suffer death or personal injury as a result of the intentional or attempted defacement, damage, or destruction of any religious real property because of the race, color, or ethnic characteristics of any individual associated with the religious property.

OVC encourages state grantees to examine the range of crimes covered by their crime victim compensation programs, and to seek to broaden crimes covered to include: crimes involving *threats* of personal injury (in addition to crimes involving actual physical injury) such as victims of stalking, child exploitation through the Internet, bank robberies, financial and telecommunications fraud, economic crime, cybercrime, hate crime, workplace violence, and other victims who are traumatized by a crime but are not physically injured.

(b) *VOCA Mandated Expenses.* At a minimum, VOCA requires States to award compensation for—

i. medical expenses attributable to physical injury resulting from a compensable crime to include eyeglasses and other corrective lenses, dental services, prosthetic devices, and other services rendered in accordance with a method of healing recognized by the law of the *State*;

ii. mental health counseling and care attributable to a compensable crime; such intervention must be provided by a person who meets such standards as may be set by the state for victim mental health counseling and care.

iii. loss of wages attributable to a physical injury resulting from a compensable crime; and

iv. funeral expenses attributable to a death resulting from a compensable crime.

State grantees may offer compensation for other types of expenses, including property damage and loss. It should be noted, however, that *amounts awarded for property damage and loss cannot be included in the amount certified as a basis for the award of VOCA compensation grants* (see Section III.D. for exceptions to this requirement).

(c) *Additional Recommended Expenses for All Crime Victims.* OVC encourages states to make compensation benefits available for other compensable expenses, *as deemed* by state statute, rulemaking, policy, or procedure, such as:

i. Financial planning services for victims of economic crime, domestic

violence, and survivors of homicide victims. Financial planning must be provided by a person who meets State standards for provision of this service.

ii. Travel and transport for survivors of homicide victims to secure bodies of deceased victims from another country or state.

iii. Temporary lodging for domestic violence victims.

iv. Crime scene clean up.

v. Replacement costs for clothing and bedding held as evidence, and replacement or repair of windows and locks.

vi. Medically-necessary building modification and medically-necessary devices. With regard to medically-necessary building modifications, VOCA funds used to make minor building adaptations and modifications (*e.g.,* access ramps for persons with mobility-impaired-based disabilities) must comply with the requirements under the National Historic Preservation Act (NHPA), 16 U.S.C. § 470. For more information regarding NHPA compliance requirements, see the VOCA Victim Compensation Application Kit.

vii. Attorneys' fees related to a crime victim's claim for compensation.

viii. Payments related to forensic sexual assault examinations—even if the crime victim did not report the crime to law enforcement, and even if such payments are made from funds administered by the compensation programs and are allowable under state statute, rulemaking, policy, or procedure.

ix. Payments for forensic interviews and other services provided by child advocacy centers which meet the standards of the National Children's Alliance or other standards accepted by the state.

x. Child and respite care for dependents of crime victims and survivors of homicide to allow them to participate in criminal justice activities.

xi. Mental health counseling and care. OVC encourages states to extend mental health counseling and care services to victims of economic crimes who oftentimes suffer mental distress and guilt following the loss of income and savings in financial fraud cases.

(d) *Additional Recommended Expenses for Victims of Terrorist Acts.* OVC encourages states to make additional compensation benefits available, according to *state* statute, rulemaking, policy, or procedure, for victims of terrorism outside the jurisdiction of the U.S., such as:

i. Transportation to relocation site for injured victim and family members who wish to leave the city or country of the terrorist attack.

ii. Telephone bills related to communicating with family members outside the territorial jurisdiction of the United States (*e.g., abroad*) following a terrorist attack; and

iii. Attorneys' fees related to assisting a claimant in settling an estate, particularly if it involves another country, and obtaining benefits or documents such as government and/or private life insurance, retirement annuities, Social Security Benefits, Victim Compensation in foreign country.

2. Victim Cooperation with Law Enforcement.

Crime victim compensation programs must promote victim cooperation with the reasonable requests of law enforcement authorities.

State crime victim compensation programs maintain the authority and discretion to establish their own standards for victim cooperation with the reasonable requests of law enforcement. OVC encourages state compensation program staff to meet with victims and advocates to review whether state statutes and state program guidelines and policies are responsive to the needs of crime victims and to determine possible issues that might affect a victim's cooperation with law enforcement.

A crime victims' willingness to cooperate may be affected by compelling health or safety concerns including apprehension about personal safety, fear of retaliation, and intimidation by the offender or others. Crime victims may be reluctant to cooperate fully with law enforcement after receiving threats of violence or death against themselves and their families from the offender.

Age, psychological, cultural, or linguistic barriers may affect the victim's ability to cooperate with law enforcement. There may be unique barriers deterring a young child or senior citizen from complying fully with law enforcement. Embarrassment, shame and the psychological trauma may delay the reporting of sexual assault. Cultural and language differences may diminish a victim's access to and understanding of the criminal justice system. In setting the standard for victim cooperation with law enforcement, OVC encourages state programs to determine how to address these considerations.

VOCA's ''cooperation with the reasonable requests of law enforcement'' requirement may be fulfilled by utilizing the following criteria or by any other criteria the state believes is necessary to encourage victim cooperation with law enforcement. For example, a state may:

a. Require a victim to report the crime to a law enforcement agency;

b. Require a victim to report the crime to an appropriate governmental agency, such as child and/or adult protective services, family court, or juvenile court; or

c. Accept proof of the completion of a medical evidentiary examination, such as medical reports, x-rays, medical photographs, as well as other clinical assessments as evidence of cooperation with law enforcement in cases involving sexual assault or abuse.

3. Non Supplantation.

The state must certify that grants received under VOCA will not be used to supplant state funds otherwise available to provide crime victim compensation benefits or to administer the state crime victim compensation program. States may not decrease their financial commitment to crime victim compensation solely because they are receiving VOCA funds for the same purpose.

4. Compensation for Residents Victimized Outside Their Own State.

A state must provide compensation to state residents who are victims of crimes occurring outside the state if the crimes would be ''compensable crimes'' had they occurred inside that state; and the crimes (1) occurred in a state without an eligible VOCA crime victim compensation program, or (2) in cases of terrorism (as defined in 18 U.S.C. § 2331), occurred outside the territorial jurisdiction of the United States. The state must make these awards according to the same criteria used to make awards to those who are victimized while in the state.

In addition, OVC encourages states to provide compensation to state residents who are victims of crimes other than terrorism while outside the territorial jurisdiction of the United States. This policy would allow coverage for state residents, such as tourists, students or business personnel, who are victims of crime in locations outside the territorial jurisdiction of the United States where no crime victim compensation program exists.

5. Compensation for Non-residents of a State.

The state must make compensation awards to non-resident crime victims for compensable expenses according to the same criteria used to make awards to victims who are residents of the State. For purposes of this provision, the term ''non-resident'' must, at a minimum, include anyone who is a resident of one of the United States. A state may, at its discretion, broaden its definition of non-

resident to include anyone victimized in the state regardless of whether the victim is a United States resident.

6. Victims of Federal Crime.

The state must provide compensation to victims of federal crimes occurring within the state on the same basis that the program provides compensation to victims of state crimes.

7. Unjust Enrichment.

States cannot deny compensation to a victim based on the victim's familial relationship to the offender or because the victim shares a residence with the offender. States must adapt a rule or written policy or procedure to avoid unjust enrichment of the offender, but they cannot have the effect of denying compensation to a substantial percentage of victims of violence by family members or others with whom the victim shares a residence. In developing rulemakings, or written policies or procedures, states are encouraged to consider the following:

a. The legal responsibilities of the offender to the victim under the laws of the state and collateral resources available to the victim from the offender. For example, legal responsibilities of the offender may include court-ordered restitution or family support under the domestic, marital property or child support laws of the state. Collateral resources may include insurance or pension benefits available to the offender to cover the costs incurred by the victim as a result of the crime. As with other crimes, however, victims of family violence must not be penalized when collateral sources of payment are not viable. Examples of such situations include when the offender refuses to, or cannot, pay restitution or other civil judgments within a reasonable period of time or when the offender impedes direct or third party (*i.e.,* insurance) payments.

b. Payments to victims of family violence which only minimally or inconsequentially benefit offenders are not considered unjust enrichment. For example, denial of medical or dental expenses solely because the offender has legal responsibility for the charges, but is unwilling or unable to pay them, could result in the victim's not receiving treatment. The state must consider paying these expenses. If necessary, the state has the option of seeking reimbursement from the offender.

c. Consultation with social services and other concerned governmental entities, as well as with private organizations that support and advocate on behalf of victims of violence from family members.

d. The special needs of child victims of criminal violence, especially when the perpetrator is a parent who may or may not have lived in the same residence, and of child witnesses to violence.

8. Discrimination Prohibited.

No person shall on the grounds of race, color, religion, national origin, handicap, or sex be excluded from participation in, denied the benefits of, subjected to discrimination under, or denied employment in connection with, any undertaking funded in whole or in part with sums made available under VOCA. States and subgrantees in a decentralized system must comply with these VOCA nondiscrimination requirements, the Federal civil rights statutes and regulations cited in the Assurances that accompany the grant award document, and all other applicable civil rights requirements.

9. Other Information Requested by the OVC Director.

The state must provide such other information and assurances as the Director of OVC may reasonably require.

C. VOCA Funds and Collateral Federal Programs

1. Means Testing. Federal, state, or local government programs that use Federal funds are prohibited from including victim compensation benefits when determining income eligibility for an applicant, until the total amount of medical or other assistance that the applicant receives from all programs is sufficient to fully compensate the applicant for losses suffered as a result of the crime. VOCA requires this policy when an applicant needs medical or other assistance, in full or in part, because of the commission of a crime against the applicant. VOCA gives the OVC Director authority to determine whether such medical or other assistance is needed by an applicant for victim compensation. Through these Proposed Program Guidelines, the Director's authority is delegated to State VOCA compensation administrators.

2. Payor of Last Resort. The compensation program is the payor of last resort with regard to Federal or Federally financed programs. When a victim is eligible to receive benefits from a Federal program or Federally financed state or local program, such as Medicaid, Medicare, Social Security Disability, and Veterans' Benefits, the state compensation program shall not use VOCA funds to pay costs that another Federal or Federally financed programs covers. Additionally, the Federal or Federally financed program must make payments without regard to benefits awarded to a crime victim by a state crime victim compensation program.

In addition, OVC encourages VOCA compensation administrators to coordinate their activities with such other programs that provide financial assistance and services to crime victims, whether funded by Federal, State or local governments. Examples of such programs include Worker's Compensation programs, vocational rehabilitation programs and VOCA victim assistance subgrantee programs. Outreach to other programs can result in mutual understanding of eligibility requirements, application processing, time lines, and other program specific requirements. Administrators are also encouraged to refer applicants to other programs when those programs can cover applicant expenses or provide services. As payor of last resort, it is in the compensation program's discretion to make exception for victim needs that are not adequately met by other collateral sources.

V. State Certifications

State grantees must provide information about crime victim compensation claims payouts including all available funding sources, deductions, and recovery costs on the certification form. The U.S. Department of Justice, Office of Justice Programs uses this information to calculate allocations for VOCA eligible crime victim compensation programs.

A. *Program Revenue.* States must report on the certification form all sources of revenue to the crime victims compensation program during the Federal Fiscal Year. In some instances, funds are made available to the crime victim compensation program from other departments or agencies, from supplemental appropriations, donations, or unspent funds carried over from prior years. The amount of certified revenue, excluding VOCA funds, but including all other sources, including carried over funds, must meet or exceed the amount of certified payments to crime victims.

B. *Program Expenditures.* The total amount to be certified by the state program must include only those amounts paid from state funding sources to or on behalf of crime victims during the Federal Fiscal Year (October 1 to September 30), excluding property damage or loss.

C. *Amounts to be Included.* The types of expenses for which states may award crime victims compensation vary nationwide. However, all states must award compensation for medical expenses, including mental health counseling and care, loss of wages, and funeral expenses.

Compensable expenses to be included in the annual certification must be authorized by state statute, rulemaking, policy, or procedure, providing there is authority in state law. States may include expenses, not specifically identified in VOCA, such as pain and suffering; annuities for child victims for loss of support; and other costs listed under Part IV.B. of these Proposed Program Guidelines. Included as exceptions to the property damage and loss prohibitions are: crime scene clean up; replacement or repair of windows and locks; replacement costs for items held as evidence.

State grantees may include payments related to forensic sexual assault examinations, even if the victim did not report the crime to law enforcement, and if such payments are made from funds administered by the compensation program and are allowable under the state's statute, rulemaking, policy, or procedure. State grantees may also include payments for forensic interviews and other services provided by child advocacy centers which meet the standards of the National Children's Alliance, or other standards accepted by the State.

D. *Amounts to be Excluded.* State grantees must exclude in the certification VOCA grant funds; compensation for property damage or loss except for items found in Parts IV.B.1.c)iv and IV.B.1.c)v of these Proposed Program Guidelines; audit costs; personnel costs; collection of offender fines, fees, penalties and other revenues which provide basic program funding; and, any other program administrative costs.

E. *Deductions.* Deductions are receipts or refunds which offset or reduce expense items that are allocable to a particular crime victim compensation claim. These include funds received through a state's subrogation interest in a claimant's civil law suit recovery, restitution, refunds, or other reimbursements. For purposes of applicable credits, the term ''restitution'' means payment made by the offender to the victim who was injured or killed in the crime.

''Restitution'' does not refer to the general collection of fines, fees and other penalties from offenders which provide the basic revenue for the compensation program and are not identifiable to reimbursement of payouts on a specific claim. Refunds include amounts from overpayment, erroneous payments made to claimants, uncashed checks, etc. Additional guidance regarding applicable credits can be found in OMB Circular A–87, ''Cost Principles for State and Local Governments.''

F. *Recovery Costs.* Salary and benefits costs for personnel directly involved in recovery efforts may be offset against the amount of income received from such reimbursement. Recovery efforts are those activities which are directly attributable to obtaining restitution, refunds, and other reimbursements for the expenses of specific crime victims who have received compensation from the state program. Expenses shall be limited to the percentage of those salaries and benefits incurred by the state for individual employees whose primary responsibilities (not less than 75 percent of each individual employee's work time) are directly and specifically related to recovering restitution and other reimbursements on behalf of compensated victims. Additional allowable recovery costs are garnishment fees, service of legal documents, legal publication and subpoena fees related to collecting reimbursements. Recovery costs can not be claimed for employees whose salary and benefits are derived from federal administrative grant funds. Recovery costs do not include the collection of fines, fees and other penalties which provide the basic revenue for the compensation program and are not identifiable to reimbursement of payouts on a specific victim claim.

G. *Source of Payments to Crime Victims.* There is no financial requirement that state compensation programs identify the source of individual payments to crime victims as either federal or state dollars, nor is there any requirement that restitution recoveries or other refunds be tracked to federal or state dollars paid out to the victim.

H. *Incorrect Certifications.* If it is determined that a state has made an incorrect certification of payments of crime victims compensation from state funding sources and a VOCA crime victim compensation grant is awarded in error, one of the following two courses of action will be taken:

1. Over Certification. In the event that an over certification comes to the attention of OVC or the Office of the Comptroller, OJP, the necessary steps will be taken to recover funds which were awarded in error. OVC does not have the authority to permit states to keep amounts they were not entitled to as a result of over certification. Generally, it is the policy of OVC to reduce the amount of the subsequent year VOCA victim compensation award by the amount of the overpayment.

2. Under Certification. If a state under-certifies amounts paid to crime victims, OVC and the Office of the Comptroller, OJP, will not supplement payments to the state to correct the state's error since this would require recalculating allocations to every state VOCA compensation and assistance program and cause disruption in administration of these programs.

VI. Application Process

A. *Application for Federal Assistance.* Each year, OVC issues to each eligible state an Application Kit which contains the necessary forms and detailed information required to make application for VOCA crime victim compensation grant funds. The amount for which each state may apply is included in the Application Kit. States shall use the Standard Form 424, Application for Federal Assistance, and its attachments to apply for VOCA victim compensation grant funds. Applications for VOCA crime victim compensation grants may only be submitted by the state agency designated by the Governor to administer the VOCA victim compensation program and grant.

Completed applications must be submitted on or before the stated deadline, as determined by OVC. If an eligible state fails to apply for its crime victim compensation allocation by the prescribed deadline, OVC will redistribute federal VOCA crime victim compensation dollars to the VOCA victim assistance grant program, after all states have received the statutorily prescribed percentage of their prior years payout.

B. Program Reporting Requirements: Annual Performance Report. States receiving VOCA crime victim compensation grant funds must submit an annual OVC Performance Report. The Performance Report is due January 15 of each year for the preceding Federal fiscal year.

VII. Administrative Costs

A. *Administrative Cost Allowance.* VOCA allows, at state discretion, up to five percent of crime victim compensation grant funds to be used for administering the crime victim compensation grant program. Any portion of the allowable five percent which is not used for administrative purposes must be used for awards of compensation to crime victims.

The intent of this provision is to support and advance program administration in all operational areas including claims processing, staff development and training, public outreach, and program funding by supporting activities that will improve program effectiveness and service to

crime victims. If a state elects to use up to five percent of the VOCA compensation grant for administrative purposes, only those costs directly associated with administering the program and enhancing overall program operations ensuring compliance with federal requirements can be paid with administrative grant funds. State grantees are not required to match the portion of the grant that is used for administrative purposes. The state administrative agency may charge a federally approved indirect cost rate to this grant, but this cost is capped by the limits of these five percent administrative funds.

States must certify that VOCA funds used for administrative purposes will not supplant state or local funds but will increase the amount of funds that are available for administering the compensation program. For the purpose of establishing a baseline level of effort, states must maintain documentation on the overall administrative commitment of the state prior to their use of VOCA administrative grant funds. State grantees will not be in violation of the non-supplantation clause if there is a decrease in the state's previous financial commitment towards the administration of the VOCA grant programs in the following situations: (1) A serious loss of revenue at the state level, resulting in across-the-board budget restrictions; and (2) A decrease in the number of ''state-supported'' staff positions used to meet the state's ''maintenance of effort'' in administering the VOCA grant programs. State grantees using administrative funds must notify OVC if there is a decrease in the amount of its previous state financial commitment to the cost of administering the VOCA program.

Only staff activities directly related to compensation functions can be funded with VOCA administrative funds. Similarly, any equipment purchases or other expenditures charged to the VOCA administrative funds can only be charged proportionate to the percentage of time utilized by the compensation program.

B. *Allowable Costs.* Allowable administrative costs include but are not limited to the following:

1. Salaries and benefits for staff and consultant fees to administer and manage the financial and programmatic aspects of the crime victim compensation program and federal funding. Staff supported by administrative funds under the VOCA crime victim compensation grant must work directly for the compensation program in the same proportion as their level of support from VOCA grant funds. If the staff performs other functions unrelated to the provision of compensation to crime victims, the proportion of time working on the compensation program must be documented using some reasonable method of valuation at regular measurable intervals; *e.g.,* time and attendance records. The documentation must provide a clear audit trail for the expenditure of grant funds.

Temporary or periodic personnel support, such as qualified peer reviewers for medical and mental health claims, and data processing support services are also allowable. These services may be obtained through means deemed acceptable by state administrative procedures.

2. Training and technical assistance. Attendance at training and technical assistance meetings and conferences that address issues relevant to state administration of victim compensation programs. Allowable costs may include travel, registration fees and other such expenses.

3. Monitor compliance with Federal and state requirements.

4. Automation including study, design and implementation of claims processing and other relevant systems; purchase and maintenance of equipment for the state grantee, including computers, software, FAX machines, copying machines and TTY's; and services required to support the use of technology to enhance services to crime victims.

5. Delivery of training to victim services providers, criminal justice personnel, and health and mental health, and social services providers about the crime victim compensation program. Training may include information on application, eligibility requirements and compensable expenses.

6. Memberships in crime victim organizations and victim-related informational materials.

7. Prorated program audit costs for the crime victim compensation program.

8. Indirect costs at a federally approved rate that when applied, does not exceed the 5 percent administrative cost allowance.

9. Participation in improving coordination efforts on behalf of crime victims with other Federal, state, and local agencies and organizations. This includes development of protocols, policies, and procedures that promote coordination of victim compensation with other financial and services programs that improve responses to crime victims. Such participation includes the development and coordination of criminal crisis response teams.

10. Informational materials including development of applications, brochures, posters, training manuals and other relevant publications which describe the compensation application process, eligibility criteria, and range of benefits available for crime victims. This includes related printing costs.

11. Development of strategic and financial plans, conduct of surveys, needs assessments and examination of victim satisfaction with the program, as well as the use of technology to map victim services.

12. Toll-free telephone numbers, Internet access to claim information, and other such program enhancements.

C. *Requirement to Notify OVC of Use of Administrative Funds.* State grantees that elect to utilize administrative funds under the VOCA compensation grant are required to include with their annual application notification of their intent to use administrative funds; *i.e.,* the percentage of funds, and the purposes for which they will be used. Grantees will be expected to include in their annual performance report documentation of actual use of administrative funds.

D. *Confidentiality of Research Information.* Except as otherwise provided by Federal law, no officer or employee of the Federal Government or recipient of monies under VOCA shall use or reveal any research or statistical information gathered under this program by any person, and identifiable to any specific private person, for any purpose other than the purpose for which such information was obtained, in accordance with VOCA. Such information, and any copy of such information, shall be immune from legal process and shall not, without the consent of the person furnishing such information, be admitted as evidence or used for any purpose in any action, suit, or other judicial, legislative, or administrative proceeding.

This provision is intended, among other things, to assure the confidentiality of information provided by crime victims to employees of VOCA-funded victim compensation programs. However, there is nothing in VOCA or its legislative history to indicate that Congress intended to override or repeal, in effect, a state's existing law governing the disclosure of information, which is supportive of VOCA's fundamental goal of helping crime victims. For example, this provision would not act to override or repeal, in effect, a state's existing law pertaining to the mandatory reporting of a suspected child abuse. See *Pennhurst*

State School and Hospital v. *Halderman, et al.,* 451 U.S. 1 (1981).

VIII. Financial Requirements

As a condition of receiving a grant, states must agree to insure adherence to the general and specific requirements of the *OJP Financial Guide* and all applicable OMB Circulars and Common Rules. This includes the maintenance of books and records in accordance with generally accepted government accounting principles. For copies of the *OJP Financial Guide,* call or write the OJP Office of the Comptroller, 810 7th Street NW, Washington, DC 20531, Customer Service Center 1/800–458–0786; or visit the website at: *http://www.ojp.usdoj.gov/FinGuide/.*

IX. Mass Violence and Terrorism

A. *Criminal Crisis Response.* VOCA crime victim compensation grantees are encouraged to participate in state activities that prepare for and respond to mass violence and to terrorist acts, including working with the designated emergency preparedness organizations in state government. This also includes working with the VOCA victim assistance state grantee, community-based crime victim assistance programs, and other institutions such as schools on protocols for responding to victims of terrorist incidents. Administrative dollars can be used for these purposes by state grantees.

B. *Emergency Reserve Funds.* The Director of OVC may supplement crime victim compensation programs for costs associated with mass violence or terrorism to provide emergency relief, including crisis response efforts, assistance, training, and technical assistance. When a supplement is needed, OVC will utilize the state grantees' current fiscal year application as a base application in order to allow for an abbreviated and expedited means to supplement funding. When a mass violence or terrorist act occurs, an OVC staff person and the VOCA administrator will communicate concerning the need for technical assistance and for emergency reserve funds, if needed. If the OVC Director decides that supplemental Federal funding is needed, the State grantee must submit the Standard Form 424, Application for Federal Assistance and its attachments to apply for funds. When considering whether to award a supplemental grant, the OVC Director will consider, *among other factors:*

1. The numbers of victims injured or killed.
2. The impact on a community.
3. The resource limitations of the state and the community to meet the needs resulting from the mass violence or terrorist act.
4. The projected amount of supplemental funding needed as well as the period of time for which funding is needed.

C. *Grant Period.* Supplemental victim compensation grant funds are available for expenditure throughout the fiscal year of award plus the next three fiscal years. The federal fiscal year begins on October 1 and ends on September 30.

X. Monitoring

A. *Office of the Comptroller/General Accounting Office/Office of the Inspector General.* The U.S. Department of Justice, Office of Justice Programs, Office of the Comptroller; the General Accounting Office; and the U.S. Department of Justice, Office of the Inspector General, conduct periodic reviews of the financial policies and procedures and records of VOCA state grantees. Therefore, upon request, states must provide authorized representatives with access to examine all records, books, papers, case files, or other documents related to the expenditure of funds received under this grant.

B. *Office for Victims of Crime.* OVC conducts on-site monitoring in accordance with its monitoring plan. While on site, OVC personnel review various documents and files including: (1) program manuals; (2) procedures; (3) program reports; (4) claimant application, eligibility requirements, determination and appeal processes; (5) a random sampling of victim compensation claim files; and (6) other applicable state records and files. Grantees are notified in writing of their compliance with requirements of VOCA.

XI. Suspension and Termination of Funding

If, after reasonable notice to the grantee, OVC finds that a state has failed to comply substantially with VOCA, the state's application for funding, the *OJP Financial Guide* (effective edition), the Final Program Guidelines, or any implementing regulation or Federal requirements, OVC may suspend or terminate funding to the state and/or take other appropriate action. Under the procedures of 28 CFR Part 18, states may request a hearing on the record on the justification for the suspension and/or termination of VOCA funds.

Dated: September 12, 2000.

Kathryn M. Turman,

Director, Office for Victims of Crime.

[FR Doc. 00–23790 Filed 9–19–00; 8:45 am]

BILLING CODE 4401–18–P

Federal Register

Wednesday,
September 20, 2000

Part VI

The President

Executive Order 13167—Amendment to Executive Order 13147, Increasing the Membership of the White House Commission on Complementary and Alternative Medicine Policy

Federal Register
Vol. 65, No. 183
Wednesday, September 20, 2000

Presidential Documents

Title 3—

The President

Executive Order 13167 of September 15, 2000

Amendment to Executive Order 13147, Increasing the Membership of the White House Commission on Complementary and Alternative Medicine Policy

By the authority vested in me as President by the Constitution and the laws of the United States of America, including the Federal Advisory Committee Act, as amended (5 U.S.C. App.), and in order to increase the membership of the White House Commission on Complementary and Alternative Medicine Policy from not more than 15 members to up to 20 members, it is hereby ordered that the second sentence of section 1 of Executive Order 13147 of May 7, 2000, is amended by deleting ''not more than 15'' and inserting ''up to 20'' in lieu thereof.

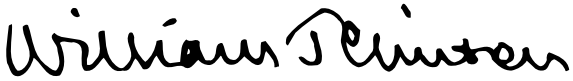

THE WHITE HOUSE,
September 15, 2000.

[FR Doc. 00–24364
Filed 9–19–00; 8:45 am]
Billing code 3195–01–P

Reader Aids

Federal Register

Vol. 65, No. 183

Wednesday, September 20, 2000

CUSTOMER SERVICE AND INFORMATION

Federal Register/Code of Federal Regulations

General Information, indexes and other finding aids	**202–523–5227**
Laws	**523–5227**
Presidential Documents	
Executive orders and proclamations	**523–5227**
The United States Government Manual	**523–5227**
Other Services	
Electronic and on-line services (voice)	**523–4534**
Privacy Act Compilation	**523–3187**
Public Laws Update Service (numbers, dates, etc.)	**523–6641**
TTY for the deaf-and-hard-of-hearing	**523–5229**

ELECTRONIC RESEARCH

World Wide Web

Full text of the daily Federal Register, CFR and other publications:

http://www.access.gpo.gov/nara

Federal Register information and research tools, including Public Inspection List, indexes, and links to GPO Access:

http://www.nara.gov/fedreg

E-mail

PENS (Public Law Electronic Notification Service) is an E-mail service for notification of recently enacted Public Laws. To subscribe, send E-mail to

listserv@www.gsa.gov

with the text message:

subscribe PUBLAWS-L your name

Use listserv@www.gsa.gov only to subscribe or unsubscribe to PENS. We cannot respond to specific inquiries.

Reference questions. Send questions and comments about the Federal Register system to:

info@fedreg.nara.gov

The Federal Register staff cannot interpret specific documents or regulations.

FEDERAL REGISTER PAGES AND DATE, SEPTEMBER

53157–53522 1
53523–53888 5
53889–54138 6
54139–54396 7
54397–54740 8
54741–54942 11
54943–55168 12
55169–55430 13
55431–55884 14
55885–56208 15
56209–56456 18
56457–56772 19
56773–57080 20

CFR PARTS AFFECTED DURING SEPTEMBER

At the end of each month, the Office of the Federal Register publishes separately a List of CFR Sections Affected (LSA), which lists parts and sections affected by documents published since the revision date of each title.

3 CFR

Administrative Orders:

Memorandums:
September 11, 2000 56209

Presidential Determinations:
Presidential Determination No. 99–36 of September 10, 1999 (see Presidential Determination No. 2000–29 of September 12, 2000) No. 00–29 of September 12, 2000 55883

Proclamations:
7336 53887
7337 54397
7338 56457
7339 56459
7340 56761
7341 56767
7342 56769
7343 56771

Executive Orders:
5327 (Revoked in part by PLO 7461) 54297
13147 (Amended by EO 13167) 57079
13167 57079

5 CFR

532 55431
2635 55076

Proposed Rules:
2635 53650
2640 53942

7 CFR

246 53523
301 .....53528, 54139, 54741, 54943, 55431
457 56773
905 55885
920 54945
927 53531
929 55436
944 54945
1735 54399

Proposed Rules:
226 55102
319 56803
932 54818
983 53652
1940 55784
1945 54973

8 CFR

204 53889
214 56463
245 53889

9 CFR

94 56774
98 56775
318 53531
381 53531

Proposed Rules:
75 56807
206 53653
317 56262
381 56262
390 56503

10 CFR

1 54948
2 54948
19 54948
30 54948
40 54948
50 54948
51 54948
70 .....54948, 56211
72 53533
430 56740

12 CFR

612 54742
614 54742
702 55439
709 55439
1710 55169

Proposed Rules:
741 55464

13 CFR

121 53533

14 CFR

23 .....55848, 56779
25 .....55443, 55848
33 55848
39 .....53157, 53158, 53161, 53897, 54140, 54143, 54145, 54403, 54407, 54409, 54743, 55175, 55449, 55450, 55452, 55453, 55457, 55891, 56231, 56233, 56236, 56780, 56783, 56785
71 .....53558, 54950, 54952, 54953, 55076, 56239, 56240, 56466, 56468, 56788
95 54744
97 55458
121 56192
125 56192
135 56192
145 56192
400 56618
401 56618
404 56618
405 56618
406 56618
413 56618

415....56618
431....56618
433....56618
435....56618
450....56670
Proposed Rules:
23....56809
25....56992
39....53199, 53201, 53203, 53205, 53206, 54182, 54184, 54445, 54820, 54823, 54981, 55466, 55468, 55470, 56264, 56266, 56268, 56270, 56273, 56275, 56276, 56506, 56507, 56509, 56811, 56814, 56817, 56819
71....54824, 54825
91....56992
121....56992
125....56992
135....56992

15 CFR

738....55177
742....55177
746....55177
774....55177
960....56241

16 CFR

305....53163, 53165
1000....53167
Proposed Rules:
313....54186
436....53946

17 CFR

146....53559
200....55180
240....53560
Proposed Rules:
30....53946
210....54189
240....54189

18 CFR

Proposed Rules:
1304....56821

19 CFR

4....56788
10....53565
12....53565
18....53565
24....53565, 56790
111....53565
113....53565
114....53565
125....53565
134....53565
145....53565
162....53565
171....53565
172....53565
178....56788

20 CFR

404....54747
416....54747

21 CFR

7....56468
10....56468
14....56468
19....56468
25....56468
101....54686, 56468
107....56468
110....56468
114....56468
170....56468
203....56480
205....56480
310....56468
312....56468
314....56468
316....56468
500....56468
510....54147, 55460
514....56468
520....53581
573....53167
558....53581, 53582, 53583, 54147, 54410, 54411, 55883
601....56468
803....56468
814....56468
860....56468
Proposed Rules:
101....56835
201....56511

22 CFR

22....54148
40....54412
42....54412
203....54790

24 CFR

5....55134
401....53899
903....55134
982....55134

25 CFR

Proposed Rules:
103....53948
292....55471

26 CFR

1....53584, 53901
25....53587
602....53584, 56484
Proposed Rules:
1....56835

28 CFR

Proposed Rules:
16....53679
545....56840
550....56840

29 CFR

4022....55894
4044....55894

30 CFR

218....55187
917....53909
931....54791
Proposed Rules:
218....55476
256....55476
260....55476
943....54982

31 CFR

1....56792
202....55427
203....55428
225....55429
344....55400
380....55426

32 CFR

311....53168
701....53171
736....53589
762....53171
765....53171
770....53591
Proposed Rules:
326....53902
651....54348

33 CFR

100....54150, 56484
117....54795, 54954, 56484, 56793
162....53593
165....54152, 54153, 54795, 54797, 56484
167....53911
401....56488
Proposed Rules:
26....56843
161....56843
165....56843

34 CFR

Proposed Rules:
303....53808

36 CFR

51....54155
242....55190
1010....55896
Proposed Rules:
7....53208
293....54190
800....55928

37 CFR

1....54604, 56366, 56791, 57024
3....54604
5....54604, 57024
10....54604
Proposed Rules:
201....54984
256....54984
401....54826

38 CFR

8....54798
19....55461
21....55192

39 CFR

20....55462, 56242
Proposed Rules:
111....53212, 56511

40 CFR

9....55810
51....56245
52....53172, 53180, 53181, 53595, 53599, 53602, 54413, 55193, 55196, 55201, 55910, 56251, 56486, 56794m 56797
60....56798
62....53605
63....54419, 55810, 56798
80....53185, 54423
180....55911, 55921, 56253
260....56798
261....54955, 56798
264....56798
265....567980
266....56798
270....56798
271....56798
300....56258
Proposed Rules:
50....54828
51....56844
52....53214, 53680, 53962, 54820, 55205, 56278, 56284, 56856
62....53680
63....55332, 55489, 55491
80....53215, 54447
81....54828
85....56844
141....55362
146....53218
148....55684
152....55929
174....55929
260....56287
261....55684, 56287
268....55684, 56287
271....55684, 56287, 56288
300....54190, 56288
302....55684
372....53681

41 CFR

101-16....54965
102-5....54965
Ch. 301....53470

42 CFR

36....53914
36a....53914
447....55076
457....55076
Proposed Rules:
405....53963
410....55078
414....55078

43 CFR

Proposed Rules:
3600....55864
3610....55864
3620....55864

44 CFR

Ch. I....53914
65....53915
67....53917
295....53914
Proposed Rules:
67....53964

45 CFR

2543....53608

46 CFR

Proposed Rules:
401....55206

47 CFR

Ch. I....55923
1....53610, 54799, 56261
2....54155
11....53610, 54155
21....53610

24 53624
25 ....53610, 54155
51 54433
52 53189
64 54799
73 ....53610, 53638, 53639, 53640, 54176, 54804, 54805, 55924, 55925, 55926, 56799, 56800
74 ....53610, 54155
76 53610
78 54155
79 ....54176, 54805, 56801
90 53641
95 53190
100 53610
101 54155

Proposed Rules:

20 ....56752, 56757
73 ....53690, 53973, 53974, 54192, 54832, 54833, 55930, 56857, 56858
90 55931

48 CFR

209 54988
1828 54439
1845 54813
1852 ....54439, 54813

Proposed Rules:

2 54940
13 54936
22 54104
25 54936
31 54940
32 56454
35 54940
52 ....54104, 54936, 56454
204 54985
213 56858
442 54986
1811 56859

49 CFR

192 54441
195 54441
593 56489
594 56497

Proposed Rules:

23 54454
26 54454
385 56521
386 56521
565 53219
571 55212
1244 54471

50 CFR

17 54177
20 ....53190, 53492, 53936
25 56396
32 56396
100 55190
300 54969
600 53646
622 ....55203, 56500, 56801
635 54970
648 ....53648, 53940, 55926
660 ....53646, 53648, 54178, 54817, 56801
679 ....53197, 53198, 54179, 54180, 54971, 56502

Proposed Rules:

17 ....53222, 53691, 53974, 54472, 54892, 56530
600 54833
622 54474
648 54987
660 ....53692, 54475, 55214, 55495
679 56860

REMINDERS

The items in this list were editorially compiled as an aid to Federal Register users. Inclusion or exclusion from this list has no legal significance.

RULES GOING INTO EFFECT SEPTEMBER 20, 2000

AGRICULTURE DEPARTMENT

Animal and Plant Health Inspection Service

Exportation and importation of animals and animal products:

Poultry products from Mexico transiting U.S.; published 8-21-00

ENVIRONMENTAL PROTECTION AGENCY

Pesticides; tolerances in food, animal feeds, and raw agricultural commodities:

Azinphos-methyl; published 6-22-00

HOUSING AND URBAN DEVELOPMENT DEPARTMENT

Privacy Act; implementation; published 8-21-00

NUCLEAR REGULATORY COMMISSION

Spent nuclear fuel and high-level radioactive waste; independent storage; licensing requirements:

Flexibility; clarification and addition; published 8-21-00

SOCIAL SECURITY ADMINISTRATION

Social security benefits and supplemental security income:

Mental disorders and traumatic brain injury in adults; medical criteria; impairments listing; published 8-21-00

TRANSPORTATION DEPARTMENT

Federal Aviation Administration

Airworthiness directives:

Airbus; published 8-16-00

Bell; published 8-16-00

Lockheed; published 8-16-00

Saab; published 8-16-00

General rulemaking procedures:

Plain language and removal of redundant and outdated material; published 8-21-00

TREASURY DEPARTMENT

Privacy Act; implementation; published 9-20-00

COMMENTS DUE NEXT WEEK

AGRICULTURE DEPARTMENT

Agricultural Marketing Service

Oranges, grapefruit, tangerines, and tangelos grown in—

Florida; comments due by 9-25-00; published 9-15-00

COMMERCE DEPARTMENT

National Oceanic and Atmospheric Administration

Land Remote Sensing Policy Act of 1992:

Private land remote-sensing space systems; licensing requirements; comments due by 9-29-00; published 7-31-00

Marine mammals:

Incidental taking—

North Pacific Acoustic Laboratory; low frequency sound source operation; comments due by 9-25-00; published 8-24-00

COMMODITY FUTURES TRADING COMMISSION

Commodity Exchange Act:

Futures commission merchants and introducing brokers; minimum financial requirements

Capital charge on unsecured receivables due from foreign brokers; comments due by 9-27-00; published 8-28-00

DEFENSE DEPARTMENT

Federal Acquisition Regulation (FAR):

Civilian Agency Acquisition Council and Defense Acquisition Regulations Council; definitions for classified acquisitions; comments due by 9-26-00; published 7-28-00

Final contract voucher submission; comments due by 9-25-00; published 7-27-00

North American Industry Classification System; comments due by 9-25-00; published 7-26-00

EDUCATION DEPARTMENT

Postsecondary education:

Federal Family Education Loan Program and William D. Ford Federal Direct Loan Program; comments due by 9-25-00; published 8-10-00

Higher Education Act; Title IV programs; application, reapplication, and certification processes; streamlining, etc.; comments due by 9-25-00; published 8-10-00

ENVIRONMENTAL PROTECTION AGENCY

Air pollutants, hazardous; national emission standards:

Polymers and resins—

Compliance date (Group IV); indefinite stay; comments due by 9-28-00; published 8-29-00

Compliance date (Group IV); indefinite stay; comments due by 9-28-00; published 8-29-00

Air quality implementation plans; approval and promulgation; various States:

California; comments due by 9-28-00; published 8-29-00

Indiana; comments due by 9-28-00; published 8-29-00

Air quality implementation plans; √A√approval and promulgation; various States; air quality planning purposes; designation of areas:

Michigan; comments due by 9-29-00; published 8-30-00

Superfund program:

National oil and hazardous substances contingency plan—

National priorities list update; comments due by 9-25-00; published 7-27-00

National priorities list update; comments due by 9-28-00; published 8-28-00

National priorities list update; comments due by 9-28-00; published 8-28-00

FARM CREDIT ADMINISTRATION

Farm credit system:

Loan policies and operations—

Loan purchases and sales; definitions; comments due by 9-25-00; published 7-26-00

FEDERAL COMMUNICATIONS COMMISSION

Digital television stations; table of assignments:

Maine; comments due by 9-25-00; published 8-7-00

Radio services, special:

Private land mobile services—

Public safety 700 MHz band; comments due by 9-25-00; published 8-25-00

Radio stations; table of assignments:

Vermont; comments due by 9-25-00; published 8-24-00

Television broadcasting:

Cable television systems—

Multichannel video and cable television service; 1998 biennial review; comments due by 9-26-00; published 9-5-00

GENERAL SERVICES ADMINISTRATION

Federal Acquisition Regulation (FAR):

Civilian Agency Acquisition Council and Defense Acquisition Regulations Council; definitions for classified acquisitions; comments due by 9-26-00; published 7-28-00

Final contract voucher submission; comments due by 9-25-00; published 7-27-00

North American Industry Classification System; comments due by 9-25-00; published 7-26-00

HEALTH AND HUMAN SERVICES DEPARTMENT

Food and Drug Administration

Biological products:

In vivo radiopharmaceuticals used for diagnosis and monitoring—

Medical imaging drugs and biologics, development; evaluation and approval; industry guidance; comments due by 9-29-00; published 7-31-00

INTERIOR DEPARTMENT

Fish and Wildlife Service

Endangered and threatened species:

Critical habitat designations—

Spectacled eider and Steller's eider; comments due by 9-25-00; published 8-24-00

Southwestern Washington/ Columbia River coastal cutthroat trout; take prohibitions clarification; comments due by 9-29-00; published 9-6-00

INTERIOR DEPARTMENT

Hearings and Appeals Office, Interior Department

Hearings and appeals procedures:

Surface coal mining; award of costs and expenses; petitions; comments due by 9-26-00; published 7-28-00

JUSTICE DEPARTMENT
Drug Enforcement Administration
Prescriptions:
Facsimile transmission for patients enrolled in hospice programs; comments due by 9-25-00; published 7-25-00

NATIONAL AERONAUTICS AND SPACE ADMINISTRATION
Federal Acquisition Regulation (FAR):
Civilian Agency Acquisition Council and Defense Acquisition Regulations Council; definitins for classified acquisitions; comments due by 9-26-00; published 7-28-00
Final contract voucher submission; comments due by 9-25-00; published 7-27-00
North American Industry Classification System; comments due by 9-25-00; published 7-26-00

NUCLEAR REGULATORY COMMISSION
Rulemaking petitions:
Union of Concerned Scientists; comments due by 9-25-00; published 7-10-00
Spent nuclear fuel and high-level radoactive waste; independent storage; licening requirements:
FuelSolutions addition; comments due by 9-25-00; published 7-11-00

POSTAL SERVICE
International Mail Manual:
Priority Mail Global Guaranteed; enhanced expedited service from selected U.S.locations to selected European countries and China; amendment; comments due by 9-27-00; published 8-28-00

SECURITIES AND EXCHANGE COMMISSION
Securities, etc.:
Auditor independence requirements; comments due by 9-25-00; published 7-12-00

TRANSPORTATION DEPARTMENT
Coast Guard
Drawbridge operations:
Louisiana; comments due by 9-27-00; published 8-28-00

TRANSPORTATION DEPARTMENT
Federal Aviation Administration
Air carrier certification and operations:
Airbus airplanes; digital flight data recorder requirements; revisions; comments due by 9-25-00; published 8-24-00
Airworthiness directives:
Aerospatiale; comments due by 9-28-00; published 8-29-00
Airbus; comments due by 9-25-00; published 8-24-00
Boeing; comments due by 9-25-00; published 7-25-00
British Aerospace; comments due by 9-28-00; published 8-29-00
Dornier; comments due by 9-28-00; published 8-29-00
Empresa Brasileira de Aeronautica, S.A.; comments due by 9-28-00; published 8-29-00
Empressa Brasileira de Aeronautica S.A.; comments due by 9-29-00; published 8-15-00
McDonnell Douglas; comments due by 9-25-00; published 7-27-00
Raytheon; comments due by 9-25-00; published 8-10-00
Class D and Class E airspace; comments due by 9-29-00; published 8-9-00
Class D and Class E airspace; correction; comments due by 9-29-00; published 8-21-00
Class D and Class E4 airspace; comments due by 9-28-00; published 8-29-00
Class E airspace; comments due by 9-29-00; published 8-23-00

TRANSPORTATION DEPARTMENT
Federal Highway Administration
Transportation Equity Act for 21st Century; implementation:
Engineering services; State transportation departments; administrative costs eligibility; comments due by 9-25-00; published 7-26-00

TRANSPORTATION DEPARTMENT
National Highway Traffic Safety Administration
Motor vehicle safety standards:
School bus safety; small business impacts; comments due by 9-29-00; published 9-13-00

TREASURY DEPARTMENT
Alcohol, Tobacco and Firearms Bureau
Alcohol; viticultural area designations:
Fair Play, El Dorado County, CA; comments due by 9-25-00; published 7-25-00

TREASURY DEPARTMENT
Currency and foreign transactions; financial reporting and recordkeeping requirements:
Bank Secrecy Act; implementation—
Currency transactions reporting requirement; exemptions; comments due by 9-26-00; published 7-28-00

VETERANS AFFAIRS DEPARTMENT
Adjudication; pensions, compensation, dependency, etc.:
Signature by mark; comments due by 9-25-00; published 7-26-00

LIST OF PUBLIC LAWS

This is a continuing list of public bills from the current session of Congress which have become Federal laws. It may be used in conjunction with ''P L U S'' (Public Laws Update Service) on 202–523–6641. This list is also available online at http://www.nara.gov/fedreg.

The text of laws is not published in the **Federal Register** but may be ordered in ''slip law'' (individual pamphlet) form from the Superintendent of Documents, U.S. Government Printing Office, Washington, DC 20402 (phone, 202–512–1808). The text will also be made available on the Internet from GPO Access at http://www.access.gpo.gov/nara/index.html. Some laws may not yet be available.

H.R. 3519/P.L. 106–264

Global AIDS and Tuberculosis Relief Act of 2000 (Aug. 19, 2000; 114 Stat. 748)

Last List August 22, 2000

Public Laws Electronic Notification Service (PENS)

PENS is a free electronic mail notification service of newly enacted public laws. To subscribe, go to www.gsa.gov/archives/publaws-l.html or send E-mail to **listserv@www.gsa.gov** with the following text message:

SUBSCRIBE PUBLAWS-L
Your Name.

Note: This service is strictly for E-mail notification of new laws. The text of laws is not available through this service. **PENS** cannot respond to specific inquiries sent to this address.