AUTHENTICATED
U.S. GOVERNMENT
INFORMATION
GPO

Federal Register

10–19–00 Thursday
Vol. 65 No. 203 Oct. 19, 2000
Pages 62577–62990

The **FEDERAL REGISTER** is published daily, Monday through Friday, except official holidays, by the Office of the Federal Register, National Archives and Records Administration, Washington, DC 20408, under the Federal Register Act (44 U.S.C. Ch. 15) and the regulations of the Administrative Committee of the Federal Register (1 CFR Ch. I). The Superintendent of Documents, U.S. Government Printing Office, Washington, DC 20402 is the exclusive distributor of the official edition.

The **Federal Register** provides a uniform system for making available to the public regulations and legal notices issued by Federal agencies. These include Presidential proclamations and Executive Orders, Federal agency documents having general applicability and legal effect, documents required to be published by act of Congress, and other Federal agency documents of public interest.

Documents are on file for public inspection in the Office of the Federal Register the day before they are published, unless the issuing agency requests earlier filing. For a list of documents currently on file for public inspection, see http://www.nara.gov/fedreg.

The seal of the National Archives and Records Administration authenticates the Federal Register as the official serial publication established under the Federal Register Act. Under 44 U.S.C. 1507, the contents of the **Federal Register** shall be judicially noticed.

The **Federal Register** is published in paper and on 24x microfiche. It is also available online at no charge as one of the databases on GPO Access, a service of the U.S. Government Printing Office.

The online edition of the **Federal Register** is issued under the authority of the Administrative Committee of the Federal Register as the official legal equivalent of the paper and microfiche editions (44 U.S.C. 4101 and 1 CFR 5.10). It is updated by 6 a.m. each day the **Federal Register** is published and it includes both text and graphics from Volume 59, Number 1 (January 2, 1994) forward.

GPO Access users can choose to retrieve online **Federal Register** documents as TEXT (ASCII text, graphics omitted), PDF (Adobe Portable Document Format, including full text and all graphics), or SUMMARY (abbreviated text) files. Users should carefully check retrieved material to ensure that documents were properly downloaded.

On the World Wide Web, connect to the **Federal Register** at http://www.access.gpo.gov/nara. Those without World Wide Web access can also connect with a local WAIS client, by Telnet to swais.access.gpo.gov, or by dialing (202) 512-1661 with a computer and modem. When using Telnet or modem, type swais, then log in as guest with no password.

For more information about GPO Access, contact the GPO Access User Support Team by E-mail at gpoaccess@gpo.gov; by fax at (202) 512–1262; or call (202) 512–1530 or 1–888–293–6498 (toll free) between 7 a.m. and 5 p.m. Eastern time, Monday–Friday, except Federal holidays.

The annual subscription price for the **Federal Register** paper edition is $638, or $697 for a combined **Federal Register,** Federal Register Index and List of CFR Sections Affected (LSA) subscription; the microfiche edition of the **Federal Register** including the Federal Register Index and LSA is $253. Six month subscriptions are available for one-half the annual rate. The charge for individual copies in paper form is $9.00 for each issue, or $9.00 for each group of pages as actually bound; or $2.00 for each issue in microfiche form. All prices include regular domestic postage and handling. International customers please add 25% for foreign handling. Remit check or money order, made payable to the Superintendent of Documents, or charge to your GPO Deposit Account, VISA, MasterCard or Discover. Mail to: New Orders, Superintendent of Documents, P.O. Box 371954, Pittsburgh, PA 15250–7954.

There are no restrictions on the republication of material appearing in the **Federal Register.**

How To Cite This Publication: Use the volume number and the page number. Example: 65 FR 12345.

SUBSCRIPTIONS AND COPIES

PUBLIC	
Subscriptions:	
Paper or fiche	**202–512–1800**
Assistance with public subscriptions	**512–1806**
General online information	**202–512–1530; 1–888–293–6498**
Single copies/back copies:	
Paper or fiche	**512–1800**
Assistance with public single copies	**512–1803**
FEDERAL AGENCIES	
Subscriptions:	
Paper or fiche	**523–5243**
Assistance with Federal agency subscriptions	**523–5243**

FEDERAL REGISTER WORKSHOP

THE FEDERAL REGISTER: WHAT IT IS AND HOW TO USE IT

FOR: Any person who uses the Federal Register and Code of Federal Regulations.

WHO: Sponsored by the Office of the Federal Register.

WHAT: Free public briefings (approximately 3 hours) to present:

1. The regulatory process, with a focus on the Federal Register system and the public's role in the development of regulations.
2. The relationship between the Federal Register and Code of Federal Regulations.
3. The important elements of typical Federal Register documents.
4. An introduction to the finding aids of the FR/CFR system.

WHY: To provide the public with access to information necessary to research Federal agency regulations which directly affect them. There will be no discussion of specific agency regulations.

WASHINGTON, DC

WHEN: November 14, 2000, at 9:00 a.m.

WHERE: Office of the Federal Register
Conference Room
800 North Capitol Street, NW.
Washington, DC
(3 blocks north of Union Station Metro)

RESERVATIONS: 202–523–4538

Printed on recycled paper.

Contents

Federal Register

Vol. 65, No. 203

Thursday, October 19, 2000

Agricultural Marketing Service
RULES
Pork Promotion, Research, and Consumer Information:
Program referendum; conduct procedures, 62577–62579

Agriculture Department
See Agricultural Marketing Service
See Animal and Plant Health Inspection Service
See Food Safety and Inspection Service
See Forest Service

Animal and Plant Health Inspection Service
PROPOSED RULES
Animal welfare:
Inspection, licensing, and procurement of animals, 62650

Centers for Disease Control and Prevention
NOTICES
Agency information collection activities:
Proposed collection; comment request, 62720–62721

Children and Families Administration
NOTICES
Agency information collection activities:
Proposed collection; comment request, 62721

Commerce Department
See Export Administration Bureau
See International Trade Administration
See National Oceanic and Atmospheric Administration
NOTICES
Senior Executive Service:
Performance Review Board; membership, 62694–62695

Committee for the Implementation of Textile Agreements
NOTICES
Cotton, wool, and man-made textiles:
Nepal, 62711
Qatar, 62711–62712
Russia, 62712

Defense Department
See Navy Department

Education Department
NOTICES
Agency information collection activities:
Proposed collection; comment request, 62712–62713
Submission for OMB review; comment request, 62713

Employment Standards Administration
NOTICES
Agency information collection activities:
Proposed collection; comment request, 62753–62754

Energy Department
See Federal Energy Regulatory Commission
NOTICES
Meetings:
Environmental Management Site-Specific Advisory Board—
Savannah River Site, SC, 62713–62714
Nonproliferation and National Security Advisory Committee, 62714

Environmental Protection Agency
RULES
Air quality implementation plans; approval and promulgation; various States:
Connecticut, 62620–62626
Virginia, 62626–62629
Pesticides; tolerances in food, animal feeds, and raw agricultural commodities:
Norflurazon, 62629–62631
Tebuconazole, 62634–62637
Zinc phosphide, 62631–62634
PROPOSED RULES
Air quality implementation plans; approval and promulgation; various States:
Connecticut, 62657–62658
District of Columbia, 62679–62681
Maryland, 62668–62679
Maryland and Virginia, 62658–62666
Virginia, 62666–62668, 62681
NOTICES
Agency information collection activities:
Submission for OMB review; comment request, 62716–62717
Committees; establishment, renewal, termination, etc.:
Gulf of Mexico Program Policy Review Board, 62717
Water pollution control:
Clean Water Act—
Class II administrative penalty assessments, 62717

Executive Office of the President
See Presidential Documents

Export Administration Bureau
RULES
Export administration regulations:
Encryption items; revisions, 62600–62610
National security industrial base regulations:
Imported articles; effect on national security; paperwork reduction, 62599–62600

Federal Aviation Administration
RULES
Commercial space transportation:
Launch site operation; licensing and safety requirements; solid propellants handling and cooperation with National Transportation Safety Board, 62811–62898
PROPOSED RULES
Airworthiness directives:
Industrie Aeronautiche e Meccaniche, 62650–62651
Lockheed, 62651–62653
Class E airspace, 62653–62657
NOTICES
Exemption petitions; summary and disposition, 62792–62794
Meetings:
Aviation Rulemaking Advisory Committee, 62794
RTCA, Inc., 62794

Reports and guidance documents; availability, etc.:
Passenger facility charge audit guide for public agencies; facility charge revenue examination procedures, 62794–62795

Federal Communications Commission
RULES
Common carrier services:
Commercial mobile radio services—
Manual roaming service; interconnection and resale obligations; correction, 62646
PROPOSED RULES
Television broadcasting:
Commercial television station public interest obligations; standardized and enhanced disclosure, 62683–62690

Federal Energy Regulatory Commission
NOTICES
Environmental statements; availability, etc.:
Georgia Power Co., 62716
Applications, hearings, determinations, etc.:
ANR Pipeline Co., 62714
Dominion Transmission, Inc., 62714–62715
Kern River Gas Transmission Co., 62715
Maritimes & Northeast Pipeline, L.L.C., 62715
Northwest Pipeline Corp., 62715

Federal Railroad Administration
NOTICES
Orders:
Automatic train control and advanced civil speed enforcement system; requirements for Northeast Corridor railroads, 62795–62799
Traffic control systems; discontinuance or modification:
CSX Transportation, Inc., 62799–62802
CSX Transportation, Inc., et al., 62801
I&M Rail Link, LLC, 62802
Indiana Harbor Belt Railroad Co., 62802
Lake Superior & Ishpeming Railroad Co., 62803
Union Pacific Railroad Co., 62803–62804

Federal Reserve System
NOTICES
Banks and bank holding companies:
Formations, acquisitions, and mergers, 62718
Permissible nonbanking activities, 62719
Federal Open Market Committee:
Domestic policy directices, 62719

Federal Transit Administration
NOTICES
Grants and cooperative agreements; availability, etc.:
Job Access and Reverse Commute Program, 62804–62807

Fish and Wildlife Service
PROPOSED RULES
Endangered and threatened species:
Critical habitat designations—
California red-legged frog, 62690–62691
Peninsular bighorn sheep, 62691–62692
NOTICES
Endangered and threatened species permit applications, 62746–62747
Meetings:
Aquatic Nuisance Species Task Force, 62747–62748
National Wildlife Refuge System:
Caddo Lake National Wildlife Refuge, TX; establishment, 62748–62749

Food and Drug Administration
NOTICES
Meetings:
Dermatologic and Ophthalmic Drugs Advisory Committee, 62722
Medical Devices Advisory Committee, 62722
Pharmaceutical Science Advisory Committee et al., 62722–62723
Reports and guidance documents; availability, etc.:
Veterinary Medicinal Products, International Cooperation on Harmonisation of Technical Requirements for Registration—
Anthelmintics effectiveness; specific recommendations for equine, porcine, and canine, 62723–62724

Food Safety and Inspection Service
RULES
Meat and poultry inspection:
Federal Meat Inspection and Poultry Products Inspection Acts; State designations—
North Dakota, 62579–62581

Forest Service
NOTICES
Meetings:
Opal Creek Scenic Recreation Area Advisory Council, 62694

General Services Administration
RULES
Federal travel:
Per diem localities; maximum lodging and meal allowances
Correction, 62637–62644

Health and Human Services Department
See Centers for Disease Control and Prevention
See Children and Families Administration
See Food and Drug Administration
See Health Care Financing Administration
See Health Resources and Services Administration
See Indian Health Service
See National Institutes of Health
PROPOSED RULES
Medical facility construction and modernization:
Uncompensated services; compliance alternatives, 62975–62982
NOTICES
Meetings:
Complementary and Alternative Medicine Policy, White House Commission, 62719–62720

Health Care Financing Administration
RULES
Medicare:
Cardiac Pacemaker Registry; requirements removed, 62645–62646
PROPOSED RULES
Medicare:
Clinical social worker services; coverage and payment, 62681–62683
NOTICES
Agency information collection activities:
Proposed collection; comment request, 62724–62725
Medicare:
Inpatient hospital deductible and hospital and extended care services co-insurance amounts (2001 CY), 62725–62727

Monthly actuarial rates and supplementary medical insurance (Part B) premium rates (2001 CY), 62727–62733
Part A hospital insurance premium for uninsured aged and disabled individuals who have exhausted other entitlements (2001 CY), 62733–62735

Health Resources and Services Administration
NOTICES
Agency information collection activities:
Proposed collection; comment request, 62735
Submission for OMB review; comment request, 62735–62736

Housing and Urban Development Department
NOTICES
Agency information collection activities:
Proposed collection; comment request, 62744–62745
Submission for OMB review; comment request, 62745–62746

Indian Affairs Bureau
NOTICES
Tribal-State Compacts approval; Class III (casino) gambling:
Menominee Indian Tribe of Wisconsin, 62749
Pauma Band of Mission Indians, CA, 62749

Indian Health Service
NOTICES
Agency information collection activities:
Submission for OMB review; comment request, 62736–62737

Interior Department
See Fish and Wildlife Service
See Indian Affairs Bureau
See Land Management Bureau
See Minerals Management Service
See Reclamation Bureau

Internal Revenue Service
NOTICES
Meetings:
Special Enrollment Examination Advisory Committee, 62810

International Trade Administration
NOTICES
Antidumping:
Large newspaper printing presses and components, assembled or unassembled, from—
Germany, 62695–62700
Japan, 62700–62705

Justice Department
See Justice Programs Office

Justice Programs Office
NOTICES
Agency information collection activities:
Submission for OMB review; comment request, 62750–62753

Labor Department
See Employment Standards Administration
See Occupational Safety and Health Administration
See Pension and Welfare Benefits Administration

Land Management Bureau
NOTICES
Withdrawal and reservation of lands:
Oregon, 62749–62750

Maritime Administration
NOTICES
Reports and guidance documents; availability, etc.:
U.S.-flag commercial vessels; exclusive carriage of certain export cargoes; requirement waiver criteria, 62807

Minerals Management Service
RULES
Royalty management:
Indian leases; gas valuation regulations; amendments, 62612–62614

National Aeronautics and Space Administration
RULES
Grant and cooperative agreement recipients; administrative requirements reduction, 62899–62955
NOTICES
Meetings:
Advisory Council
Aero-Space Technology Advisory Committee, 62766
Space Flight Advisory Committee, 62766

National Institutes of Health
NOTICES
Meetings:
National Cancer Institute, 62737–62740
National Heart, Lung, and Blood Institute, 62740
National Institute of Allergy and Infectious Diseases, 62741
National Institute of Child Health and Human Development, 62742
National Institute of Diabetes and Digestive and Kidney Diseases, 62742
National Institute of Environmental Health Sciences, 62741
National Institute on Aging, 62740–62741
National Institute on Drug Abuse, 62740
Scientific Review Center, 62742–62744
Warren Grant Magnuson Clinical Center Board of Govenors, 62744

National Oceanic and Atmospheric Administration
RULES
Fishery conservation and management:
Alaska; fisheries of Exclusive Economic Zone—Pollock, 62646–62649
PROPOSED RULES
Fishery conservation and management:
West Coast States and Western Pacific fisheries—Western Pacific pelagic fisheries, 62692–62693
NOTICES
Fishery conservation and management:
Pacific Fishery Management Council, 62705–62706
Grants and cooperative agreements; availability, etc.:
Coastal Ocean Program, 62706–62709
Meetings:
South Atlantic Fishery Management Council, 62709
Permits:
Endangered and threatened species, 62709–62710
Foreign fishing, 62710–62711

Navy Department
RULES
Miscellaneous rules:
Rules applicable to public, 62619
Navigation, COLREGS compliance exemptions:
USS MITSCHER, 62614–62615
Personnel:
Assistance to and support of dependents; paternity complaints, 62616–62618
Garnishment of pay of Naval military and civilian personnel for collection of child suppport and alimony, 62618–62619
Naval Discharge Review Board; administrative changes, 62615–62616

Nuclear Regulatory Commission
RULES
Spent nuclear fuel and high-level radioactive waste; independent storage; licensing requirements:
Approved spent fuel storage casks; list, 62581–62599
NOTICES
Environmental statements; availability, etc.:
Virginia Electric & Power Co., 62768–62769
Meetings:
Water reactor safety; 28th meeting, 62769–62770
Applications, hearings, determinations, etc.:
General Electric Co., 62766–62767
Siemens Power Corp., 62767–62768

Occupational Safety and Health Administration
RULES
State plans; development, enforcement, etc.:
North Carolina—
American National Red Cross coverage; Federal enforcement level change, 62610–62612

Pension and Welfare Benefits Administration
RULES
Employee Retirement Income Security Act:
Small pension plan assets; security, 62957–62974
NOTICES
Employee benefit plans; prohibited transaction exemptions:
Actuarial Sciences Associates, Inc., et al.; correction, 62755
IRA FBO Floyd A. Ross et al., 62755–62756
Merrill Lynch & Co., Inc., et al., 62756–62766

Presidential Documents
PROCLAMATIONS
Special observances:
Character Counts Week, National (Proc. 7365), 62983–62986
Forest Products Week, National (Proc. 7366), 62987
White Cane Safety Day (Proc. 7367), 62989–62990

Public Health Service
See Centers for Disease Control and Prevention
See Food and Drug Administration
See Health Resources and Services Administration
See Indian Health Service
See National Institutes of Health

Reclamation Bureau
NOTICES
Meetings:
Glen Canyon Adaptive Management Work Group and Glen Canyon Technical Work Group, 62750

Securities and Exchange Commission
NOTICES
Investment Company Act of 1940:
Exemption applications—
American Skandia Life Assurance Corp. et al., 62773–62776
American Water Capital Corp., 62770–62772
Latin America Investment Fund, Inc., et al., 62772–62773
Self-regulatory organizations; proposed rule changes:
American Stock Exchange LLC, 62783–62785
Chicago Board Options Exchange, Inc., 62776–62779
National Association of Securities Dealers, Inc., 62779–62781
New York Stock Exchange, Inc., 62781–62783
Applications, hearings, determinations, etc.:
Public utility holding company filings, 62770

State Department
NOTICES
Grants and cooperative agreements; availability, etc.:
New Independent States; exchanges and training programs, 62785–62792

Surface Transportation Board
NOTICES
Railroad operation, acquisition, construction, etc.:
Ferrocarril Mexicano, S.A. de C.V., 62807–62808

Textile Agreements Implementation Committee
See Committee for the Implementation of Textile Agreements

Transportation Department
See Federal Aviation Administration
See Federal Railroad Administration
See Federal Transit Administration
See Maritime Administration
See Surface Transportation Board

Treasury Department
See Internal Revenue Service
NOTICES
Agency information collection activities:
Submission for OMB review; comment request, 62808–62810

Separate Parts In This Issue

Part II
Department of Transportation, 62811–62898

Part III
National Aeronautics and Space Administration, 62899–62955

Part IV
Department of Labor, Pension and Welfare Benefits Administration, 62957–62974

Part V
Department of Health and Human Services, 62975–62982

Part VI
The President, 62983–62990

Reader Aids

Consult the Reader Aids section at the end of this issue for phone numbers, online resources, finding aids, reminders, and notice of recently enacted public laws.

CFR PARTS AFFECTED IN THIS ISSUE

A cumulative list of the parts affected this month can be found in the Reader Aids section at the end of this issue.

3 CFR
Proclamations:
7365 62985
7366 62987
7367 62989

7 CFR
1230 62577

9 CFR
331 62579
Proposed Rules:
1 62650
2 62650

10 CFR
72 62581

14 CFR
401 62812
417 62812
420 62812
1260 62900
1274 62900
Proposed Rules:
39 (2 documents) 62650, 62651
71 (4 documents) 62653, 62654, 62655, 62656

15 CFR
705 62599
732 62600
734 62600
740 62600
742 62600
744 62600
748 62600
770 62600
772 62600
774 62600

29 CFR
1952 62610
2520 62958

30 CFR
206 62612

32 CFR
706 62614
724 62615
733 62616
734 62618
765 62619

40 CFR
52 (3 documents) 62620, 62624, 62620
180 (3 documents) 62629, 62631, 62634
Proposed Rules:
52 (9 documents) 62657, 62658, 62666, 62668, 62671, 62675, 62677, 62679, 62681

41 CFR
Ch. 301 62637

42 CFR
409 62645
410 62645
489 62645
498 62645
Proposed Rules:
124 62976
410 62681

47 CFR
20 62646
Proposed Rules:
73 62683

50 CFR
679 62646
Proposed Rules:
17 (2 documents) 62690, 62691
660 62692

Rules and Regulations

Federal Register
Vol. 65, No. 203
Thursday, October 19, 2000

This section of the FEDERAL REGISTER contains regulatory documents having general applicability and legal effect, most of which are keyed to and codified in the Code of Federal Regulations, which is published under 50 titles pursuant to 44 U.S.C. 1510.

The Code of Federal Regulations is sold by the Superintendent of Documents. Prices of new books are listed in the first FEDERAL REGISTER issue of each week.

DEPARTMENT OF AGRICULTURE

Agricultural Marketing Service

7 CFR Part 1230

[No. LS–00–10]

Pork Promotion, Research, and Consumer Information Program: Amendment to Procedures for the Conduct of Referendum

AGENCY: Agricultural Marketing Service, USDA.

ACTION: Interim rule.

SUMMARY: This interim rule amends the Pork Promotion, Research, and Consumer Information Program: Procedures for the Conduct of Referendum, to provide an additional 5-day period to give interested persons an opportunity to challenge producers who requested absentee ballots and were not subject to challenge during the initial challenge period, September 19, 2000, through October 2, 2000. This interim rule also establishes new dates for notifying challenged producers, submitting proof of eligibility, and resolving challenges.

DATES: This interim final rule is effective October 20, 2000. Comments must be received by November 20, 2000.

ADDRESSES: Interested persons are invited to submit written comments concerning this interim rule. Comments must be sent to Ralph L. Tapp, Chief; Marketing Programs Branch, Room 2627-S; Livestock and Seed Program, Agricultural Marketing Service (AMS), USDA; STOP 0251; 1400 Independence Avenue, SW.; Washington, D.C. 20250–0251; telephone number 202/720–1115, fax 202/720–1125, or by e-mail Ralph.Tapp@usda.gov. Comments should make reference to the date and page number of this issue of the **Federal Register** and they will be made available for public inspection in the above office during regular business hours.

FOR FURTHER INFORMATION CONTACT: Ralph L. Tapp, Chief; Marketing Programs Branch, Room 2627-S; Livestock and Seed Program, AMS, USDA; Stop 0251; 1400 Independence Avenue, SW.; Washington, D.C. 20250–0251; telephone number 202/720–1115, fax 202/720–1125, or by e-mail Ralph.Tapp@usda.gov.

SUPPLEMENTARY INFORMATION:

Prior documents: Final rule—Pork Promotion, Research, and Consumer Information Program: Procedures for the Conduct of Referendum published July 13, 2000 [65 FR 43498] and Proposed rule—Pork Promotion, Research, and Consumer Information Program: Procedures for the Conduct of Referendum published April 18, 2000 [65 FR 20862].

Regulatory Impact Analysis

Executive Orders 12866 and 12998 and the Regulatory Flexibility Act

This interim final rule has been determined to be not significant for purposes of Executive Order 12866 and therefore has not been reviewed by Office of Management and Budget (OMB).

This interim rule has been reviewed under Executive Order 12998, Civil Justice Reform. It is not intended to have a retroactive effect. The Pork Promotion, Research, and Consumer Information Act of 1985 (Act) states that the statute is intended to occupy the field of promotion and consumer education involving pork and pork products and of obtaining funds thereof from pork producers and that regulation of such activity (other than a regulation or requirement relating to a matter of public health or the provision of State or local funds for such activity) that is in addition to or different from the Act may not be imposed by a State.

The Act provides that any person subject to the Pork Promotion, Research, and Consumer Information Order (Order) may file with the Secretary a petition stating that the Order, any provision of the Order, or any obligation imposed in connection with the Order is not in accordance with the law, and requesting a modification of the Order or an exemption from certain provisions or obligations of the Order. The petitioner will have the opportunity for a hearing on the petition. Thereafter the Secretary will issue a decision on the petition. The Act provides that the district court of the United States in any district in which the petitioner resides or carries on business has jurisdiction to review a ruling on the petition, if the petitioner files a complaint for that purpose not later than 20 days after the date of the entry of the Secretary's decision. The petitioner must exhaust his or her administrative remedies before he or she can initiate any such proceedings in the district court.

Pursuant to requirements set forth in the Regulatory Flexibility Act (5 United States Code (U.S.C.) 601 *et seq.*), the Administrator of AMS has considered the economic impact of this interim rule on small entities.

According to the December 29, 1999, issue of the ''Hogs and Pigs'' report published by the National Agricultural Statistics Service, the number of farms with hogs or pigs was 98,460. The majority of these hog producers subject to the Order should be classified as small entities under the criteria established by the Small Business Administration.

This interim rule amends 7 CFR part 1230 Pork Promotion, Research, and Consumer Information Program: Procedures for the Conduct of Referendum; to establish an additional five business days for challenging absentee ballots to give interested persons an opportunity to challenge producers who requested absentee ballots and who were not subject to challenge during the September 19, 2000, through October 2, 2000, challenge period. Those producers whose names were listed on the Absentee Voter Request List and who were subject to challenge because the Absentee Voter Request List indicated they had returned their ballot are not subject to challenge during this additional 5-day period. It also establishes new dates for notifying challenged producers, the dates by which challenged producers must submit proof of eligibility to the county Farm Service Agency (FSA) offices, and the dates by which FSA county offices must resolve challenges. This amendment imposes no new requirements upon those producers who cast their votes by absentee ballot or persons who wish to challenge absentee voters beyond those requirements provided by the pork referendum final rule (65 FR 43498). In the Paperwork Reduction Act section of the final rule

the Agency estimated that 25,000 pork producers would request absentee ballots. It was also estimated that the number of voters whose votes would be challenged would be 4,000. Pork producers who requested absentee ballots during the period provided for in the final rule and who have already been subject to challenge under the provisions of § 1230.631 of the final rule will not be subject to further challenge during the additional 5-day challenge period.

The information collection requirements, as discussed below, will be minimal. Therefore, this interim rule will not impose a significant economic burden on producers affected by these changes. Accordingly, the Administrator of AMS has determined that this rule will not have a significant impact on a substantial number of small entities.

Paperwork Reduction

In accordance with the OMB regulation in 5 CFR part 1320 that implements the Paperwork Reduction Act of 1995 (44 U.S.C. Chapter 35), the reporting and recordkeeping included in 7 CFR part 1230 were previously approved by OMB and were assigned OMB Number 0581–0194.

As discussed in the pork referendum rule, the relevant provisions concerning this action include:

1. Challenge of Voters

Estimate of Burden: The public reporting burden for this collection of information is estimated to average .08 hours per response.

Respondents: Only persons wishing to challenge a vote of another producer will be required to provide such challenge in writing to the county FSA office.

Estimated Number of Respondents: 2,000.

Estimated Number of Responses per Respondent: 2.

Estimated Total Annual Burden on Respondents: 320 hours.

Total Cost: $6,400.

2. Proof of Eligibility

Estimate of Burden: The public reporting burden for this collection of information is estimated to average 1 hour per response.

Respondents: Producers responding to a challenge of their eligibility to vote will be required to submit to the county FSA office records such as sales documents, tax records, or other similar documents to prove that the person owned and sold hogs or pigs during the representative period.

Estimated Number of Respondents: 4,000.

Estimated Number of Responses per Respondent: 1.

Estimated Total Annual Burden on Respondents: 4,000 hours.

Total Cost: $80,000.

3. Appealing a Challenge of Eligibility

Estimate of Burden: The public reporting burden for this collection of information is estimated to average 1 hour per response.

Respondents: Producers appealing a determination of their ineligibility to vote in the referendum will be required to submit to the county FSA office records such as sales documents, tax records, or other similar documents to prove that the person owned and sold hogs or pigs during the representative period.

Estimated Number of Respondents: 500.

Estimated Number of Responses per Respondent: 1.

Estimated Total Annual Burden on Respondents: 500 hours.

Total Cost: $10,000.

4. Absentee Voter Request List: Form LS–74

Estimate of Burden: Employees in each county FSA office will fill out one or more of the Absentee Voter Request List (Form LS–74). Because only county FSA employees will complete the Absentee Voter Request List, the estimated average reporting burden would not apply to producers voting absentee in the referendum.

Background

Under the Act, a pork referendum was conducted during the period August 18, 2000, through September 21, 2000. The referendum was conducted pursuant to referendum rules published July 13, 2000, [65 FR 43498] Pork Promotion, Research, and Consumer Information Program: Procedures for the Conduct of Referendum: final rule. The referendum was conducted among eligible pork producers who owned and sold one or more hogs or pigs and importers who imported pigs, hogs, pork or pork products to determine whether they favored the continuation of the Order. Producer in-person voting in the referendum was held September 19, 20, 21, 2000, at county FSA offices. Producer absentee ballots were available at those offices from August 18, 2000, through September 18, 2000. Importers could obtain ballots from the FSA headquarters office in Washington, D.C., from August 18, 2000, through September 21, 2000. The representative period to establish voter eligibility was the period from August 18, 1999, through August 17, 2000.

This interim rule amends the final rule on the conduct of the Pork Checkoff Program referendum to provide an additional five business days for challenging absentee votes. These changes will ensure that persons have had an opportunity to challenge all absentee voters and that all eligible absentee votes will be counted. The final pork referendum rules required that persons voting by absentee ballot print their name and address on the outside of the absentee ballot mailing envelope so that FSA county offices could check whether the absentee ballot had been returned. The final rule also required that the absentee ballot be received by the FSA county office before a producer's vote could be challenged. Due to incorrectly completed or missing names and addresses on the absentee ballot mailing envelope, some FSA county offices were not able to determine the name of the person returning the absentee ballot and were, therefore, unable to post a complete list of absentee voters for public review and challenging.

In order to ensure that eligible absentee ballots will be counted, AMS is amending the final referendum rule to allow for an additional period, beginning October 23, 2000, and ending October 27, 2000, for interested persons to review the Absentee Voter Request List (Form LS–74) posted in FSA county offices and challenge absentee voters, who were not subject to challenge during the initial challenge period, September 19, 2000, through October 2, 2000. Those producers whose names were listed on the Absentee Voter Request List and who were subject to challenge because the Absentee Voter Request List (Form LS–74) indicated the date by which they had returned their ballot are not subject to challenge during this additional 5-day period. Absentee voters whose ballots are challenged will have until November 7, 2000, to submit proof of eligibility. These changes do not affect producers who voted in-person or pork importers who voted by mail ballot.

We are deleting the requirement in § 1230.631(c) of the final rule that states that ''Absentee ballots have to be received in the FSA county office before a producer's vote can be challenged.''

During the conduct of the referendum a question was raised concerning whether a ballot would be invalid if no return address was included on the outside envelope. The return address was for the FSA county offices' administrative convenience to ensure that an absentee ballot had been requested and returned. It was never intended to invalidate an otherwise

complete absentee ballot simply because the return address was missing on the mailing envelope, and the provision in the final rule specifying the reasons for declaring a ballot invalid is consistent with our intent.

Pursuant to 5 U.S.C. 553, it is found and determined upon good cause that it is impracticable, unnecessary, and contrary to the public interest to give preliminary notice prior to putting this rule into effect and that good cause exists for not postponing the effective date of this rule until 30 days after publication in the **Federal Register**. This action amends 7 CFR part 1230, the Pork Promotion, Research, and Consumer Information Program: Procedures for the Conduct of Referendum, to provide an additional 5-day period to give interested persons an opportunity to challenge all producers who requested absentee ballots and who were not subject to challenge during the initial challenge period. This interim rule also establishes new dates for notifying challenged producers, submitting proof of eligibility, and resolving challenges.

Voting in the pork referendum was completed on September 21, 2000, and the ballots will be counted by FSA county offices on November 29, 2000, as provided for in § 1230.633 of the final rule. Accordingly, the changes made in this action should be implemented as soon as possible. Further, for the same reasons, a 30-day comment period is deemed appropriate.

List of Subjects in 7 CFR Part 1230

Administrative practice and procedure, Advertising, Agricultural research, Marketing agreements, Pork and pork products, Reporting and recordkeeping requirements.

For the reasons set forth in the preamble, 7 CFR part 1230 is amended as follows:

PART 1230—PORK PROMOTION, RESEARCH, AND INFORMATION

1. The authority citation for 7 CFR part 1230 continues to read as follows:

Authority: 7 U.S.C. 4801–4819.

§ 1230.631 [Amended]

2. In § 1230.631 paragraph (c) is amended by removing the sentence ''Absentee ballots have to be received in the FSA county office before a producer's vote can be challenged.''

3. A new § 1230.639 is added to read as follows:

§ 1230.639 Additional absentee voter challenge period.

(a) *Absentee Voter Request List.* The Absentee Voter Request List (Form LS–74) will be available for inspection during an additional challenge period of five business days (October 23, 2000–October 27, 2000) at county FSA offices. The Absentee Voter Request List will be posted daily during regular office hours in a conspicuous public location at FSA county offices during the additional challenge period.

(b) *Who can challenge.* Any person can challenge a producer's vote during the period provided in paragraph (a) of this section. Any person who wants to challenge shall do so in writing and shall include the full name of the individual or corporation or other entity being challenged. Each challenge of a producer vote must be made on a separate sheet of paper and each challenge must be signed by the challenger. The identity of the challenger will be kept confidential except as the Secretary may direct or as otherwise required by law.

(c) *Who can be challenged.* Any person whose name is on the Absentee Voter Request List who was not subject to challenge during the September 19, 2000, through October 2, 2000, challenge period may be challenged. Those producers whose names were listed on the Absentee Voter Request List and who were subject to challenge because the Absentee Voter Request List indicated they had returned their ballot are not subject to challenge during this additional 5-day period.

(d) *Notification of challenges.* The FSA County Committee or its representative, acting on behalf of the Administrator, AMS, will notify challenged producers as soon as practicable, but no later than the 2nd business day (October 31, 2000) after the last day of the additional challenge period. FSA county offices will notify all challenged persons that documentation such as sales documents, tax records, or other similar documents proving that the person owned and sold hogs or pigs during the representative period must be submitted or his or her vote will not be counted. The documentation must be provided to FSA county offices not later than November 7, 2000.

(e) *Determination of challenges.* The FSA County Committee or its representative, acting on behalf of the Administrator, AMS, will make a determination concerning the challenge based on documentation provided by the producer and will notify challenged producers as soon as practicable but no later than November 9, 2000.

(f) *Challenged ballot.* A challenge to a ballot shall be deemed to have been resolved if the determination of the FSA County Committee or its representative, acting on behalf of the Administrator, AMS, is not appealed within the time allowed for appeal or there has been a determination by the Administrator, AMS, after an appeal.

(g) *Appeal.* A person declared to be ineligible to register and vote by the FSA County Committee or its representative, acting on behalf of the Administrator, AMS, can file an appeal at the FSA county office not later than November 17, 2000. The FSA county office shall send a producer's appeal by facsimile to the Administrator, AMS, on the date it is filed at the FSA office or as soon as practical thereafter.

(h) *Determination of appeals.* An appeal will be determined by the Administrator, AMS, as soon as practical, but in all cases not later than the 45th business day (November 28, 2000) after the date of the last day of the voting period. The Administrator, AMS, shall send her decision on a producer's appeal to the FSA county office where the producer was initially challenged. The FSA county office shall notify the challenged producer of the Administrator's, AMS, determination on his or her appeal. The Administrator's, AMS, determination on an appeal shall be final.

Dated: October 17, 2000.

Kathleen A. Merrigan,

Administrator, Agricultural Marketing Service.

[FR Doc. 00–27024 Filed 10–17–00; 1:39 pm]

BILLING CODE 3410–02–P

DEPARTMENT OF AGRICULTURE

Food Safety and Inspection Service

9 CFR Part 331

[Docket No. 00–038F]

Termination of Designation of the State of North Dakota with Respect to the Inspection of Meat and Meat Food Products

AGENCY: Food Safety and Inspection Service, USDA.

ACTION: Final rule.

SUMMARY: This final rule amends the Federal meat inspection regulations by terminating the designation of the State of North Dakota under Titles I, II, and IV of the Federal Meat Inspection Act (FMIA). The State of North Dakota has enacted a State meat inspection program law and regulations that impose

inspection requirements that are at least equal to those requirements of the FMIA. The State of North Dakota will remain designated under sections 1–4, 6–10, and 12–22 of the Poultry Products Inspection Act (PPIA).

DATES: The effective date of this final rule is October 15, 2000.

FOR FURTHER INFORMATION CONTACT: Dr. William F. Leese, Director, Federal-State Relations Staff, Food Safety and Inspection Service; telephone (202) 418–8900 or fax (202) 418–8834.

SUPPLEMENTARY INFORMATION:

Background

Section 301(c) of the FMIA (21 U.S.C. 661(c)) and section 5(c) of the PPIA (21 U.S.C. 454(c)), respectively, authorize the Secretary of Agriculture to designate a State as one in which the provisions of Titles I and IV of the FMIA and sections 1–4, 6–10, and 12–22 of the PPIA will apply to operations and transactions wholly within the State after the Secretary has determined that requirements at least ''equal to'' those imposed under the Acts have not been developed and effectively enforced by the State.

On June 22, 1970, and January 2, 1971, the Secretary designated the State of North Dakota under section 301(c) of the FMIA and section 5(c) of the PPIA respectively as a State in which the Federal Government is responsible for providing meat and poultry inspection at eligible establishments and for otherwise enforcing the applicable provisions of the FMIA and the PPIA with regard to intrastate activities in the State.

In addition, on July 23, 1973, and October 29, 1975, the Federal Government assumed the responsibility of administering the authorities provided for under sections 202, 203, and 204 of the FMIA (21 U.S.C. 642, 643, and 644) and sections 11(b) and (c) of the PPIA (21 U.S.C. 460 (b) and (c)) respectively regarding certain classes of operators of meat and poultry products in North Dakota.

These designations were undertaken by the Department when it determined that the State of North Dakota was not in a position to enforce requirements that are at least ''equal to'' the requirements of FMIA and PPIA enforced by the Federal Government.

The Commissioner of Agriculture of the State of North Dakota has advised FSIS that on October 15, 2000, the State of North Dakota will be in a position to administer a State meat inspection program that includes requirements at least ''equal to'' those imposed under the Federal meat inspection program. The Commissioner of Agriculture of the State of North Dakota also has advised FSIS that the State, at this time, will remain designated for poultry products under the PPIA.

Section 301(c)(3) of the FMIA provides that whenever the Secretary of Agriculture determines that any designated State has developed and will enforce State meat inspection requirements at least ''equal to'' those imposed by the Federal Government under Titles I and IV of the FMIA, with regard to intrastate operations and transactions within the State, the Secretary will terminate the designation of such State. The Secretary has determined that the State of North Dakota has developed, and will enforce, such a State meat inspection program in accordance with such provisions of Titles I and IV of the FMIA. In addition, the Secretary has determined that the State of North Dakota is in a position to enforce effectively the provisions of sections 202, 203, and 204 of the FMIA. The designation of the State of North Dakota under sections 1–4, 6–10, and 12–22 of the PPIA will remain in effect and is not terminated.

Since it does not appear that public participation in this matter would make additional relevant information available to the Secretary under the administrative procedure provisions in 5 U.S.C. 553, it is found upon good cause that such public procedure is impracticable and unnecessary.

Executive Order 12866

This final rule is issued in conformance with Executive Order 12866 and has been determined not to be a major rule. It will not result in an annual effect on the economy of $100 million or more and will not adversely affect the economy or any segment of the economy. Because this final rule is not a significant rule under Executive Order 12866, it has not undergone review by the Office of Management and Budget.

Effect on Small Entities

The FSIS Administrator has determined that this action will not have a significant economic impact on a substantial number of small entities, as defined by the Regulatory Flexibility Act, Pub. L. 96–354 (6 U.S.C. 601). As stated above, the State of North Dakota is assuming a responsibility, previously limited to the Federal Government, of administering the meat inspection program for intrastate operations and transactions. The State's poultry products inspection program, at this time, will remain designated. No additional requirements are being imposed on small entities.

Additional Public Notification

FSIS has considered the potential civil rights impact of this final rule on minorities, women, and persons with disabilities. Public involvement in all segments of rulemaking and policy development is important. Consequently, in an effort to better ensure that minorities, women, and persons with disabilities are aware of this rulemaking, FSIS will announce it and provide copies of this **Federal Register** publication in the FSIS Constituent Update.

FSIS provides a weekly Constituent Update, which is communicated via fax to more than 300 organizations and individuals. In addition, the update is available on-line through the FSIS web page located at *http://www.fsis.usda.gov.* The update is used to provide information regarding FSIS policies, procedures, regulations, **Federal Register** notices, FSIS public meetings, recalls, and any other types of information that could affect or be of interest to our constituents and shareholders. The constituent fax list consists of industry, trade, and farm groups, consumer interest groups, allied health professionals, and other persons who have requested to be included. Through these various channels, FSIS is able to provide information to a much broader and diverse audience. For more information and to be added to the constituent fax list, fax your request to (202) 720–5704.

List of Subjects in 9 CFR Part 331

Meat inspection.

Part 331 of the Federal meat inspection regulations (9 CFR Part 331 is amended to read as follows:

PART 331—[AMENDED]

The authority citation for Part 331 continues to read as follows:

Authority: 21 U.S.C. 601–695; 7 CFR 2.17, 2.55

§ 331.2 [Amended]

1. The table in § 331.2 of the Federal meat inspection regulations is amended by removing the entry for ''North Dakota.''

§ 331.6 [Amended]

2. Section 331.6 of the Federal meat inspection regulations is amended by removing the entries for ''North Dakota'' each place it appears.

Done in Washington, DC, on: October 12, 2000.

Thomas J. Billy,

Administrator.

[FR Doc. 00–26658 Filed 10–18–00; 8:45 am]

BILLING CODE 3410–DM–P

NUCLEAR REGULATORY COMMISSION

10 CFR Part 72

RIN 3150–AG32

List of Approved Spent Fuel Storage Casks: NAC–UMS Addition

AGENCY: Nuclear Regulatory Commission.

ACTION: Final rule.

SUMMARY: The Nuclear Regulatory Commission (NRC) is amending its regulations to add the NAC Universal Storage System (NAC–UMS) cask system to the list of approved spent fuel storage casks. This amendment allows the holders of power reactor operating licenses to store spent fuel in this approved cask system under a general license.

EFFECTIVE DATE: This final rule is effective on November 20, 2000.

FOR FURTHER INFORMATION CONTACT: Stan Turel, telephone (301) 415–6234, e-mail spt@nrc.gov of the Office of Nuclear Material Safety and Safeguards, U.S. Nuclear Regulatory Commission, Washington, DC 20555–0001.

SUPPLEMENTARY INFORMATION:

Background

Section 218(a) of the Nuclear Waste Policy Act of 1982, as amended (NWPA), requires that ''[t]he Secretary [of Energy] shall establish a demonstration program, in cooperation with the private sector, for the dry storage of spent nuclear fuel at civilian nuclear reactor power sites, with the objective of establishing one or more technologies that the [Nuclear Regulatory] Commission may, by rule, approve for use at the sites of civilian nuclear power reactors without, to the maximum extent practicable, the need for additional site-specific approvals by the Commission.'' Section 133 of the NWPA states, in part, ''[t]he Commission shall, by rule, establish procedures for the licensing of any technology approved by the Commission under Section 218(a) for use at the site of any civilian nuclear power reactor.''

To implement this mandate, the NRC-approved dry storage of spent nuclear fuel in NRC-approved casks under a general license, publishing a final rule in 10 CFR part 72 entitled ''General License for Storage of Spent Fuel at Power Reactor Sites'' (55 FR 29181; July 18, 1990). This rule also established a new Subpart L within 10 CFR part 72 entitled, ''Approval of Spent Fuel Storage Casks'' containing procedures and criteria for obtaining NRC approval of dry storage cask designs.

Discussion

This rule will add the NAC–UMS cask system to the list of approved spent fuel storage casks in 10 CFR 72.214. Following the procedures specified in 10 CFR 72.230 of subpart L, NAC International (NAC) submitted an application for NRC approval with the Safety Analysis Report (SAR) entitled, ''Safety Analysis Report for the NAC UMS Universal Storage System.'' The NRC evaluated the NAC submittal and issued a preliminary Safety Evaluation Report (SER) and a proposed Certificate of Compliance (CoC) for the NAC–UMS cask system. The NRC published a proposed rule in the **Federal Register** (64 FR 45918; August 23, 1999) to add the NAC–UMS cask system to the listing in 10 CFR 72.214. The comment period ended on April 5, 2000. Seven comment letters were received on the proposed rule.

Based on NRC review and analysis of public comments, the NRC has modified, as appropriate, its proposed CoC and the Technical Specifications (TS) for the NAC–UMS cask system. The NRC has also modified its SER in response to some of the comments.

The NRC finds that the NAC–UMS cask system, as designed and when fabricated and used in accordance with the conditions specified in its CoC, meets the requirements of 10 CFR part 72, subpart L. Thus, use of the NAC–UMS cask system, as approved by the NRC, will provide adequate protection of public health and safety and the environment. With this final rule, the NRC is approving the use of the NAC–UMS cask system under the general license in 10 CFR part 72, subpart K, by holders of power reactor operating licenses under 10 CFR part 50. Simultaneously, the NRC is issuing a final SER and CoC that will be effective on November 20, 2000. Single copies of the final CoC and SER will be available by November 2, 2000 for public inspection and/or copying for a fee at the NRC Public Document Room (PDR), 11555 Rockville Pike, Rockville, Maryland and electronically at *http://ruleforum.llnl.gov.*

Documents created or received at the NRC after November 1, 1999, are also available electronically at the NRC's Public Electronic Reading Room on the Internet at *http://www.nrc.gov/NRC/ADAMS/index.html.* The public can gain entry from this site into the NRC's Agency wide Document Access and Management System (ADAMS), which provides text and image files of the NRC's public documents. An electronic copy of the final CoC, Technical Specifications, and SER for the NAC–UMS cask system can be found in ADAMS under Accession No. ML003737374. However, because the NRC must incorporate the date of publication of this **Federal Register** notice into the CoC, these documents are not yet publicly available. The NRC will make these documents publically available by November 2, 2000. Contact the NRC PDR reference staff for more information. PDR reference staff may be reached at 1–800–397–4209, 301–415–4737, or by e-mail at *pdr@nrc.gov.*

Summary of Public Comments on the Proposed Rule

The NRC received seven comment letters on the proposed rule. The commenters included two utilities, an NAC–UMS cask users group, two States, and two members of the public. Copies of the public comments are available for review in the NRC Public Document Room, 11555 Rockville Pike, Rockville, MD and electronically at *http://ruleforum.llnl.gov.*

Comments on the NAC–UMS Cask System

The comments and responses have been grouped into nine subject areas: general, radiation protection, accident analysis, design, welds, structural, thermal, technical specifications (TS), and miscellaneous issues. Several of the commenters provided specific comments on the draft CoC, NRC's preliminary SER, and TSs. To the extent possible, all of the comments on a particular subject are grouped together. The NRC's decision to list the NAC–UMS cask system within 10 CFR 72.214, ''List of approved spent fuel storage casks,'' has not been changed as a result of the public comments. A review of the comments and the NRC's responses follow:

A. General

Comment A–1: One commenter noted the regulatory analysis indicates that issuing a site-specific license would cost the NRC and the utility more time and money than the proposed action. The commenter asked for proof of this statement and suggested that a study or evaluation should be done. The commenter considers that in the long run it costs the NRC more time and

money to make all the site-specific changes needed later. Further, if each cask were site-specific, the vendor and utility would pay for a thorough analysis before presentation to the NRC, rather than the NRC ''fixing up'' everything at taxpayer expense after certification for a general license.

Response: The NRC disagrees with the comment. The scope of an NRC review of a cask design to be added under the listing of 10 CFR 72.214 is enveloped by the NRC review efforts to license that same cask design for a site-specific license. The NRC's review of that same cask design for a site-specific license also includes, but is not limited to, evaluations of siting factors, licensee financial qualifications, physical protection provisions, emergency plan provisions, the quality assurance program and the decommissioning plan. Clearly, and as stated in the regulatory analysis, the NRC and licensee costs would increase to conduct multiple site-specific reviews associated with the use of the same cask design.

Conducting site-specific reviews would ignore the alternative procedures and criteria currently in place for the addition of new cask designs that can be used under a general license and would be in conflict with the NWPA direction to the NRC to approve technologies for the use of spent fuel storage at the sites of civilian nuclear power reactors without, to the maximum extent practicable, the need for additional site reviews. It also would tend to exclude new vendors from the business market without cause and would arbitrarily limit the choice of cask designs available to power reactor licensees. Also, because of the long experience with the CoC process and other similar processes the NRC has determined that site-specific licensing would be inefficient because of the significant number of amendments that would have to be processed and therefore would add to the costs of granting CoCs rather than being more efficient.

Prior to storing spent fuel under the general license, each licensee must perform written evaluations to establish that: (1) The conditions set forth in the CoC have been met; (2) the reactor site parameters are encompassed by the cask design bases considered in the cask SAR and SER; and (3) other requirements detailed in 10 CFR 72.212 have also been met. Each general licensee must retain a copy of these written evaluations until spent fuel is no longer stored under the general license. Furthermore, these written evaluations may be inspected at any time by NRC staff.

The NRC's fee recovery structure in 10 CFR Parts 170 and 171 for the conduct of licensing and regulatory oversight activities under 10 CFR Part 72 does not differentiate between the type of license used (*i.e.,* general or specific).

Comment A–2: One commenter commented that the proposed rules for casks and the environmental assessments have become almost a ''fill in the blank'' form, and said that this needs rethinking. The commenter also made several general statements about the overall waste program and that everything is going too fast, spent fuel pools are filling to capacity, more cask designs being built by more inexperienced workers with the cheapest materials. The commenter suggested that the NRC examine the program and carefully evaluate the end result.

Response: This comment is beyond the scope of this rule that is focused solely on whether to add a particular cask design, the NAC–UMS cask system, to the list of approved casks. However, since the beginning of the CoC rulemaking process, the NRC and Congress have continuously evaluated the direction and progress of the program with the primary consideration continuing to be the health and safety of the public.

Comment A–3: One commenter cited a news article stating that one utility is seeking an accelerated licensing review and approval schedule for storage of fuel in the NAC–UMS, and was concerned that there may be pressure because of the schedule. The commenter asked how much public comment is valued when the public knows the approval needs to be completed as fast as possible. The commenter stated that NRC's job is to ensure public and worker safety.

Response: This comment is beyond the scope of this rule that is focused solely on whether to add a particular cask design, the NAC–UMS cask system, to the list of approved casks. However, since the beginning of the CoC rulemaking process, the NRC and Congress have continuously evaluated the direction, progress, and schedules of the program with the primary consideration continuing to be the health and safety of the public. The public comment and response procedure has always been and will continue to be an important part of the rulemaking process.

Comment A–4: One commenter did not receive the reference section as listed in the Table of Contents for the SER and asked why. The commenter stated that the references and dates are important and that the public wants these references and dates. However, the references are often dated from the 1970's causing concern to the commenter. The commenter requested the missing pages from the SER.

Response: The NRC separately provided the reference section of the SER issued with the preliminary SER to the commenter. The NRC had appropriately included the dates of references in the preliminary SER, and is uncertain why the commenter did not receive this section.

Comment A–5: One commenter noted differences between NAC–MPC and NAC–UMS and stated that the terms ''multipurpose'' and ''universal'' are not explained. The commenter stated the casks are for storage only at this point and that is what they should be called in the documents.

Response: Similarities or differences between the NAC–UMS cask design under consideration and any other cask design are beyond the scope of this rulemaking. The terms ''universal'' and ''multi-purpose'' have been selected by the applicant as descriptive of the system's design flexibility. The NRC agrees with the commenter that the NAC–UMS cask design evaluated in this rulemaking is limited to its acceptability for storage. However, the NRC does not consider descriptive nomenclature of the intended use beyond storage to be inappropriate.

Comment A–6: One commenter asked what the ''M'' in UMS stands for and why is it not USS for Universal Storage System.

Response: The NAC–UMS is the model name selected by the vendor. UMS stands for ''Universal MPC System,'' where MPC is intended to indicate ''multi-purpose canister.''

Comment A–7: One commenter agreed with one of the State's published comments. Several comments also were made on topics pertaining to the decommissioning of the Maine Yankee site.

Response: The agreement with the State's published comments was noted. The State's comments in their entirety have been considered within this section. The comments pertaining to the decommissioning of the Maine Yankee site are outside the scope of this rule.

B. Radiation Protection

Comment B–1: One commenter disagreed with the SER statement that it is unnecessary for the applicant to specify the source term for the confinement analyses and stated that the source term and corresponding dose consequence should be provided to the public in these documents. The

commenter stated there is no reason not to require this information that the NRC may need to know in the future.

Response: The NRC disagrees with the comment. Revision 1 of Interim Staff Guidance (ISG) No. 5, ''Confinement Evaluation'' specifies that for storage casks having closure lids that are designed and tested to be leak tight as defined in ''American National Standard for Leakage Tests on Packages for Shipment of Radioactive Materials,'' American National Standards Institute (ANSI) N14.5–1997, detailed confinement analyses are not necessary. Therefore, the applicant is not required to provide a detailed analysis of the leakage of radioactive materials through the welded canister. As indicated in SAR Section 7.1, the confinement boundary is completely welded and inspected in accordance with both the American Society of Mechanical Engineers (ASME) Code and ISG No. 4, ''Cask Closure Weld Inspections,'' and is leak tested to ANSI leaktight standards. Further, the analyses presented in the SAR demonstrated that the stresses, temperatures, and pressures of the Transportable Storage Canister (TSC) are within the design basis limits under the accident conditions identified by the applicant and that the confinement boundary of the TSC remains intact for all credible accidents. The NRC concurs with the evaluation in the SAR and believes that the design of the confinement boundary, that includes the inspection of welds is adequately rigorous and meets the applicable regulations.

Comment B–2: One commenter asked if there is an explanation in the SAR of detailed plans for how to dispose of the radioactive gases purged from the canister with nitrogen during unloading. The commenter asked if the disposal process has been clearly thought out so it could be performed the day after a cask is loaded, if necessary, and all personnel would know the process.

Response: SAR Chapter 8 includes guidance for the development of site-specific operating procedures to be followed for unloading the TSC and includes consideration of the radioactive gases purged from the canister. The canister to be unloaded will be flushed with nitrogen gas to remove any accumulated radioactive gases prior to initiating fuel cooldown. The amount of radioactive gases displaced by the nitrogen gas is first assessed by sampling to determine the appropriate radiological controls. Any radioactive gaseous effluent released from the canister would be processed through High-Efficiency Particulate Air (HEPA) filters and any additional filtration systems a facility may have in order to filter the air from a fuel handling building or reactor building. All radioactive effluents released to the environment must meet Federal and State regulations.

Comment B–3: One commenter asked if the high peak dose rates could be reduced in some way for the transfer cask top during shield lid welding, the top of the transfer cask containing a sealed canister filled with Boiling Water Reactor (BWR) fuel, and the bottom of the transfer cask with a canister filled with Pressurized Water Reactor (PWR) fuel.

Response: The high peak dose rates are based upon loading the design basis fuel and present the worst case scenario for estimating doses to workers. The actual doses received by workers should be less than the calculated doses because the actual fuel loaded may have a longer cooling time and a different, lower burnup. Under the facility's as low as reasonably achievable (ALARA) does exposure program, the licensee will have to evaluate ways to reduce the dose to those who will be working with the cask. For example, temporary shielding could be used to reduce dose to workers.

Comment B–4: Three commenters noted that the Completion Time for Required TS Action A.1 of Limiting Condition for Operation (LCO) 3.2.1 (Decontamination of Canister Surface Contamination) is unnecessarily restrictive. The commenters request that the Completion Time be revised to 25 days because this LCO is not time dependent.

Response: The NRC disagrees with this comment. The applicant evaluated and proposed the 7-day time frame. During the review process, the staff evaluated and found acceptable the applicant's proposal. The NRC found the 7-day completion time reasonable to decontaminate the surface if contamination on the canister or transfer cask is identified. The commenters did not provide adequate justification for revising the LCO. If there is surface contamination on the canister or transfer cask, then it is good health physics practice to decontaminate the surface as soon as practicable but within the seven day completion time.

Comment B–5: Three commenters stated that the Completion Time for Required Action A.2 of LCO 3.2.2 (Concrete Cask Average Surface Dose Rates) is unnecessarily restrictive, and request that the Completion Time be revised to 25 days.

Response: The NRC disagrees with this comment. The applicant evaluated and proposed the 7-day time frame. During the review process, the NRC evaluated and found acceptable the applicant's proposal. The NRC found the 7-day completion time reasonable to verify compliance with the regulations. The comment did not provide adequate justification for revising the LCO.

Comment B–6: Two commenters noted that the radiological dose to adjacent controlled or noncontrolled site areas is based on 20 loaded vertical storage modules (Preliminary Safety Evaluation Report [PSER] Sections 10.3 and 10.4), and that the prototypical modules are arranged in two rows with ten storage modules per row. The commenters stated this assumption is unrealistic in Independent Spent Fuel Storage Installations (ISFSIs) that support the complete decommissioning of an operating nuclear power plant where there may be 50 or more modules. The more storage modules, the greater the sky shine interaction that is available at the boundary of the site control area and the greater the onsite occupational dose. The commenters stated that the PSER does not analyze the more typical module configurations and, thus, does not meet the requirements of 10 CFR 72.236(d).

Response: NRC disagrees with this comment. This application is for a general license and therefore a generic approach has been taken in evaluating the doses to site workers and the public. Prior to a general licensee using this cask, the licensee is required to meet the conditions stated in 10 CFR 72.212. Specifically, 10 CFR 72.212(b)(2)(iii) states that the requirements in 10 CFR 72.104 (the criteria for radioactive materials in effluents and direct radiation from an ISFSI or Monitored Retrievable Storage Facility (MRS)) must be met. Therefore, to demonstrate compliance with 10 CFR 72.104, the § 72.212 evaluation will have to contain a dose evaluation for the ISFSI site that includes the actual number and arrangement of storage canisters.

Comment B–7: One commenter stated that compliance with required actions A.1 and A.2 for LCO 3.2.2 in the TS does not either restore compliance with the LCO or allow exiting the LCO. LCO 3.2.2 in the TS contains limits for the average surface dose rates of each concrete cask during loading operations. Surveillance requirement (SR) 3.2.2.1 requires that the average surface dose rates be measured once after completion of transfer of a loaded canister into the concrete cask and before beginning storage operations. Condition A and required actions A.1 and A.2 for this LCO state that if the concrete average surface dose rate limits are not met, the

licensee must administratively verify correct fuel loading, and perform analysis to verify compliance with the ISFSI offsite radiation protection requirements of 10 CFR Parts 20 and 72. However, there is no provision in this LCO to allow the loaded concrete cask to be stored in the ISFSI after actions A.1 and A.2 are completed satisfactorily. The LCO does not provide for any course of action after actions A.1 and A.2 are completed. SER Sections 5.4.3 and F5.3 state that the final determination of compliance with 10 CFR 72.104(a) is the responsibility of each applicant for a site license. Section 10.1.1 states that, as required by 10 CFR 72.212, a general licensee will be responsible for demonstrating site-specific compliance with 10 CFR part 20 and §§ 72.104 and 72.106 requirements. The intent of LCO 3.2.2 is that a licensee may store a cask that does not meet the LCO average surface dose rate limits as long as the licensee completes an analysis showing compliance with 10 CFR parts 20 and 72 limits at the ISFSI. Therefore, in order for required actions A.1 and A.2 to restore compliance with the LCO, the LCO should state: ''The average surface dose rates of each Concrete Cask shall not exceed the following limits unless required actions A.1 and A.2 are met.''

Response: NRC agrees with this comment. LCO 3.2.2 has been revised.

Comment B–8: One commenter asked why there is axial reflection of neutrons from one tube to another bypassing the poison panels under full or partial flooding, and how this affects analysis. The commenter stated that if the NRC does not support NAC's claim that the infinite-length approximation adds conservatism, it should be removed.

Response: Although the NRC does not concur with NAC's statement that the infinite-length model adds conservatism, removal of the statement from the SAR is not necessary because the statement does not affect the overall conclusions of the safety analysis. The axial reflection of neutrons from one tube to another occurs when neutrons leaving the end of one fuel tube are scattered into another fuel tube by water, fuel hardware, or cask materials located beyond the ends of the poison panels. This phenomenon provides a neutron pathway between assemblies that is not considered in infinite-length models of the fuel and cask. The NRC's analysis shows that the resulting small increase in the computed reactivity roughly balances the small reactivity decrease arising from axial neutron leakage, which is likewise neglected in NAC's infinite-length model. The NRC therefore views the infinite-length approximation as neutral; *i.e.*, it neither adds nor subtracts conservatism.

C. Accident Analysis

Comment C–1: One commenter noted that the thermal accident is postulated with 50 gallons of transporter fuel burning for 8 minutes and suggested that an evaluation for a possible jet crash and associated fire be performed.

Response: The NRC staff's standard review plan for dry cask storage systems, Chapter 11 ''Accident Analysis,'' specifies that structures, systems, and components important to safety must be designed to withstand credible accidents and natural phenomena events. A cask transporter fire is considered credible for the NAC–UMS cask design, and is the basis for the 8-minute fire associated with the time it would take to burn 50 gallons of fuel. Other modes of transport causing the fire (such as airplanes, trains, and delivery trucks) are not considered plausible for this cask design and are beyond the scope of this rule. However, before using the NAC–UMS cask, the general licensee must evaluate the site to determine if the chosen site parameters are enveloped by the design bases of the approved cask as required by 10 CFR 72.212(b)(3). The licensee's site evaluation should consider the effects of nearby transportation and military activities. Also included in this evaluation is the verification that the cask handling equipment used to move the Vertical Concrete Cask (VCC) to the pad is limited to 50 gallons of fuel (as detailed in Technical Specification B 3.4.5–Site Specific Parameters and Analyses).

Comment C–2: Three commenters requested that LCO 3.1.7 (Fuel Cooldown Requirement) be deleted from the TS because there are no design basis accidents that require fuel cooldown for removal from a sealed canister. The commenters believed that the applicant demonstrated that cooldown can be performed as shown by the ''Thermal Evaluation'' section of NUREG–1536, ''The Standard Review Plan for Dry Cask Storage Systems, January, 1997'' and that if the fuel cooldown requirements cannot be removed from the TS, the cooldown requirements should be moved to the ''Administrative Controls and Programs'' section.

Response: The NRC agrees with the comment that the TS A 3.1.7, ''Fuel Cooldown Requirements'' associated with canister unloading procedures can be deleted from the TS. The NRC agrees that this would be a highly unlikely scenario that could be adequately controlled by approved site-specific operating procedures developed based on the technical basis contained in SAR Chapter 8. Reuse of the canister after unloading would not be likely. The fuel would be returned to the spent fuel pool for subsequent dry cask storage in another canister and/or transport.

Comment C–3: One commenter asked a number of questions related to the Boral panels regarding the continued efficiency over time, the number of casks that have utilized Boral, how the Boral is manufactured and tested, and whether the panels can structurally deform.

Response: Boral has been used in the nuclear industry since the 1950's and has been used in spent fuel storage and transportation cask baskets since the 1960's. Several utilities have also used Boral in spent fuel pool storage racks. Industry experience has revealed no credible mechanisms for a loss of Boral efficacy in the cask. Therefore, the NRC has reasonable assurance that the Boral panels in the PWR and BWR baskets of the TSC will perform their intended criticality function throughout the licensed storage period.

Each Boral panel is held in place by a stainless steel cover plate, that is welded around its perimeter to the outer wall of the fuel tube. As noted in SAR Section 6.1, criticality control in the PWR basket is achieved by surrounding the fuel assemblies with four panels of Boral for each fuel assembly. In the BWR basket, single panels of Boral placed between each fuel assembly are used for criticality control.

Boral will be manufactured and tested under the control and surveillance of a quality assurance and quality control program that conforms to the requirements of 10 CFR Part 72, Subpart G. A statistical sample of each manufactured lot of Boral is tested by the manufacturer using wet chemistry procedures and/or neutron attenuation techniques. The specified minimum content of the neutron poison in the Boral panels (*i.e.*, 0.025 grams of B^{10} per cm^2 for the PWR basket and 0.011 grams of B10 per cm2 for the BWR basket) is ensured by the acceptance testing procedures described in SAR Section 9.1.6.

Comment C–4: One commenter noted that the NRC had reviewed the Boral vendor's product literature and believed this should be done for all materials because most cask vendors do not review this information. The commenter stated that nonstandard Boral sheets, are an area where mistakes may be made and verifications are not performed. The commenter asked why NAC was not ''up front'' with the issue of using nonstandard Boral sheets.

Response: The NRC disagrees that most vendors do not review material specifications selected for use within cask designs. The vendor is responsible for implementing a quality assurance program. The NRC expects that the material used in the cask systems meets minimum design specifications. The NRC has no specific information that this or other vendors do not properly specify and confirm material properties. Furthermore, the NRC does specifically evaluate and consider the materials utilized in a proposed cask design. Regarding the use of ''non-standard'' Boral sheets, the vendor had already committed to obtaining a specific B^{10} loading for the neutron absorbers, both in the SAR and as stipulated in the design features section of the TS. The NRC's safety evaluation fully describes the basis for the NRC's acceptance.

Comment C–5: One commenter expressed a concern about the possible production of hydrogen from the aluminum heat transfer disks during loading and unloading operations.

Response: The NRC has considered the possible production of hydrogen in its evaluation. As noted in SAR Section 3.4.1.2.2, the applicant anticipates that no hydrogen gas is expected to be detected prior to, or during, the loading or unloading operations. However, if a reaction between the aluminum heat transfer disks and the spent fuel pool water occurs, the loading and unloading procedures of SAR Chapter 8 that include procedures to detect and remove hydrogen from the space between the shield lid and the top of the water during any welding or cutting operations, provide adequate assurance that the welders will be protected. Further, the NRC has licensed other storage casks that utilize aluminum heat transfer components.

Comment C–6: Two commenters stated that the NAC–UMS system does not provide for a capability to verify periodically whether or not the storage conditions have changed, thus requiring canning or other remedial measures for fuel that has developed further damage during storage. The commenters stated that the fuel-containing canisters may need to be opened periodically in a hot cell and visually inspected, and that an ISFSI using the NAC–UMS system may require such a facility because the canisters may not be shipped under 10 CFR Part 71 without verification of fuel rod integrity. The commenters stated that the PSER should define verification requirements for the NAC–UMS system prior to shipment under Part 71 and evaluate the applicant's verification methods.

Response: The NRC disagrees with the comment. The NRC, with the issuance of Interim Staff Guidance (ISG) No. 1, ''Damaged Fuel'' addressed the definition of damaged fuel and clarified the fuel conditions for which spent fuel should be placed in cans prior to storage for the purposes of retrievability. The NAC–UMS storage cask application, as considered in this rulemaking, did not seek approval for the storage of damaged fuel as defined in ISG–1. Additionally, both the design of the NAC–UMS system and the thermal, structural, and criticality analyses ensure that the fuel will not be disrupted under normal, off-normal and accident conditions once undamaged, or intact, fuel is placed into a storage canister. Further, the results of a cask demonstration program at Idaho National Engineering and Environmental Laboratory (INEEL) (where determinations were made of the effects of dry storage casks on spent fuel integrity) showed that there were no significant fuel failures that would require extraordinary handling of the fuel. Therefore, the NRC staff has reasonable assurance that the spent fuel is adequately protected against degradation that might otherwise lead to gross rupture during storage. As such, periodic verification of cladding conditions during the storage period or prior to transportation is not warranted.

Regarding requirements associated with the safe transportation of spent fuel under 10 CFR Part 71, it is appropriate to establish the necessary conditions that ensure the health and safety of the public under the conditions of the 10 CFR Part 71 CoC. A 10 CFR Part 72 storage cask design certification does not serve to authorize the shipment of the stored contents under 10 CFR Part 71. NRC does an independent evaluation of casks for shipping under 10 CFR Part 71. Similarly, conditions of any approval under 10 CFR Part 71 are independent of necessary conclusions pertaining to a cask design's capability to meet the requirements of 10 CFR Part 72 for storage.

Comment C–7: Two commenters raised concerns about the radiation hardening of borated neutron absorber materials, including the NS-4-FR neutron shield employed in the NAC–UMS storage cask. The commenters stated there is no evidence and no analysis in the PSER to establish NS-4-FR's ability to maintain form over the expected lifetime integrated neutron flux.

Response: The NRC has reasonable assurance that NS-4-FR will maintain its form over the expected lifetime integrated gamma and neutron doses. Independent laboratory tests of the NS-4-FR material have demonstrated that radiation exposures significantly higher than those of any neutron shield component of the NAC–UMS system have not resulted in any physical deterioration of the neutron shield material. Calculations have shown that over 500 continuous years of exposure to a design basis neutron source would have to occur before the transfer cask shield neutron exposure would reach the level of the laboratory tests. Similarly, over 50 years of continuous design basis gamma exposure would be required before the laboratory test exposure levels were reached. In actuality, the exposures would need to be considerably longer with spent fuel due to the continually declining source term.

The NS-4-FR neutron shield material is used as a neutron shield in the transfer cask and the Vertical Concrete Cask (VCC) shield plug. It is not used in the storage cask. In the transfer cask, the amount of time this material will experience significant neutron fluxes is minuscule compared to the amount of time to cause radiation embrittlement of the material. In the VCC shield plug, the NS-4-FR material is placed above the canister lid and is exposed to significantly lower neutron fluxes than seen by the transfer cask.

Further, for both the transfer cask and the VCC shield plug, the NS-4-FR neutron shield is completely enclosed within welded steel components. In the transfer cask, the top and bottom plates are seam welded to the shell with full penetration or fillet welds to enclose the NS-4-FR material. Similarly, the NS-4-FR in the VCC shield plug, is enclosed between the shield plug, a retaining ring and a cover plate using fillet welds. Since the NS-4-FR is sandwiched between these various steel shells for the transfer cask and VCC shield plug, the NRC has reasonable assurance that the NS-4-FR material will maintain its form over the expected lifetime of the transfer cask's or shield plugs radiation exposures. Even if the material were to become embrittled, its placement within the VCC shield plug and transfer cask components would not allow the material to redistribute.

Comment C–8: One commenter stated that eight supply and two discharge lines in the transfer cask wall adds to confusion and mistakes, and that introducing forced air to cool the contents and allow the canister to remain longer in the transfer cask is asking for trouble because workers bank on the time being available.

Response: The NRC disagrees with the comment. The number of supply and discharge lines is a specific design

objective to ensure uniform cooling so the spent fuel contents in the canister remain within the design envelope during loading and unloading operations. Activities associated with the safe and proper use of the transfer cask design are to be conducted in accordance with site-specific operating procedures generated by the user. Appropriate identification and controls for the operation of the air supply and discharge lines, sufficient to minimize confusion and mistakes, are a responsibility of the general licensee. The objective of the option to provide forced air cooling to the transfer cask, although not intended to be routine, is to maintain the spent fuel contents within the design envelope at all times. If an operational situation results in the use of the forced air option, the spent fuel contents will remain under analyzed conditions, and thus the availability of this option is considered beneficial.

Comment C–9: One commenter opposed the idea of using the transfer cask if a canister must be removed from a concrete cask. The commenter asked if the intent is to use the transfer cask for storage if there are problems and why.

Response: The NRC evaluated and accepted the use of the transfer cask if a canister must be removed from a concrete cask, including unloading operations. The transfer cask is not an authorized configuration for long-term storage. The use of the transfer cask for loading and unloading operations is controlled by the TSs.

Comment C–10: One commenter asked that preferential loading and administrative control of fuel assemblies not be allowed to leave a wide safety margin to protect the public.

Response: The NRC disagrees with the comment. The NRC's safety evaluation determines with reasonable assurance that an adequate (rather than ''wide'') safety margin is ensured with respect to all cask activities. The proper selection and loading of candidate spent fuel assemblies necessarily relies on appropriate administrative controls. All 10 CFR Part 50 licensees that will use this cask design under the general license have extensive experience in selecting uniquely identified fuel assemblies for placement in uniquely identified locations, such as the reactor core or the spent fuel pool. Preferential loading specifications, in conjunction with the appropriate administrative loading controls, have been accepted by the NRC because they maintain an adequate safety margin and rely on similar existing administrative controls for safe fuel handling.

Comment C–11: Three commenters requested the removal of the inference in Chapter 10 of the SAR that a daily inspection of the VCC vents is an expected or routine activity. The commenters stated that identification of blocked VCC vents is accomplished by use of the temperature monitoring systems, and that physical inspection of the VCC vents, especially daily, results in unnecessary exposure and is not in keeping with preferred As Low As Reasonably Achievable (ALARA) practices.

Response: NRC disagrees with this comment. The cask user is required to verify the operability of the heat removal system by monitoring temperature instrumentation daily, as specified in TS A.3.1.6. As stated in SAR section 1.2.1.5.9, the temperature monitoring system can be read at a display device located on the outside surface of the cask or at a remote readout location. A daily inspection of the VCC vents is included in Chapter 10 of the SAR as an expected routine operation in determining a conservative, estimated annual dose due to routine operations as per ALARA practices. Whether to use a temperature monitoring system with a display on the outside of the casks or to use remote readout instrumentation is left to the cask user's discretion.

Comment C–12: Two commenters stated that the operator testing and training exercises described in CoC Section A5.0 do not require training in the importance of sequence, and commented that the CoC implies that training will be conducted solely on the activity basis, and thus, the planned training loses the importance of the various interface requirements between activities that follow each other. This omission permits operator mistakes at activity intersections and may contribute to missing parameter values or conditions that must be met for safe loading and transfer of the assembly canister from the spent fuel pool to the storage cask. The commenters stated that individual procedures should include stated preconditions that must be satisfied by the previous sequential procedure and are necessary for safely performing the subsequent activity, and that without these procedures, the application does not satisfy the requirements of 10 CFR 72.236(l).

Response: The NRC disagrees with the comment. The Administrative Controls and Programs section of the TS stipulates that the training program for the NAC–UMS system must be developed under the general licensee's systematic approach to training (SAT). The training modules must include comprehensive instructions for the operation and maintenance of the NAC–UMS System. The TS provides a detailed listing of the preoperational tests and training exercises that must be performed prior to the first use of the system to load spent fuel assemblies. Although the TS specifically recognizes that dry runs may be performed in an alternate step sequence from the actual procedures, it is the general licensee's responsibility under the SAT to establish and execute an effective preoperational testing and training program. With respect to the contents of individual procedures, Condition No. 2 of the CoC specifies that the user's written site-specific operating procedures must be consistent with the technical basis described in Chapter 8 of the SAR. The preparation of written site-specific operating procedures that contain adequate and appropriate initial conditions, prerequisites, and verifications, is not necessary prior to this rulemaking to add the NAC–UMS cask design to the list of approved storage cask designs of 10 CFR 72.214.

Comment C–13: One commenter asked why the speed of a vertical tornado-driven missile is assumed to be only 70 percent of the speed of a horizontal missile.

Response: The primary wind velocities associated with tornadoes are in the horizontal direction, and thus wind velocities in the vertical direction are considered to be less as stated in NRC review guidance. Specifically, the NUREG–0800, Section 3.5.1.4, review guidance describes the basis for the assumption that the maximum speed of a vertical tornado-driven missile, at 88.2 mph, is specified as 70 percent of a horizontal missile, at 126 mph. This vertical speed is enveloped by the horizontal missile speed of 126 mph considered conservatively in the SAR evaluation of the 1½ inch-thick VCC closure plate, that can only be hit by a vertical missile. The SAR has satisfactorily demonstrated that the VCC closure plate is adequate to withstand local impingement of a tornado missile traveling at the higher horizontal speed, *e.g.,* 126 mph.

Comment C–14: One commenter remarked that the transfer cask gets highly irradiated and exposed to high temperatures and contamination through repeated use and asked what happens to the transfer cask over time, especially the welds. The commenter stated that the trunnion area welds need inspection over time for possible leakage of pool water inside the transfer cask walls. The commenter stated that transfer casks for all cask designs need specific criteria for examination

periodically and that maybe the transfer casks are too neglected in NRC thinking. The commenter also asked what happens if water gets inside the walls starting chemical reactions and adding unaccounted for weight in lifts, and what are the requirements for transfer cask testing or checking over time.

Response: The NRC agrees that the transfer cask will be subject to hostile environmental conditions such as high radiation, temperature, and contamination through repeated use. In SAR Section 9, NAC has committed to a transfer cask maintenance program to inspect the transfer cask trunnions and shield door assemblies for gross damage and proper function for each use. Annually, the lifting trunnions, shield doors, and shield door rails must be either dye penetrant or magnetic particle examined. The SAR states that the examination method must be in accordance with Section V of the ASME Code and the acceptance criteria Section III, Section NF, NF–5350, or NF5340, as required by ANSI N14.6. Therefore, the transfer cask, including trunnion welds, is examined periodically to ensure that it will function as designed over its entire service life. This provides reasonable assurance, supplemented by inspections prior to use that water will not get inside the wall to result in potential chemical reactions or unaccounted weight in lifts.

Comment C–15: One commenter stated that if berms or shield walls are to be used for radiological protection, an evaluation of tornado missiles that could be generated as a result of their constituent materials should be performed.

Response: The NRC agrees with the comment. Use of berms or shield walls for radiological protection is a site-specific consideration that is to be evaluated by the general licensee under 10 CFR 72.212 to ensure that the reactor sites parameters, including analyses of tornado missiles that could be generated due to the material constituency of any berms or shield walls, are enveloped by the cask design bases.

Comment C–16: One commenter stated that explosion needs more evaluation, noting that where there is hydrogen, there can be an explosion.

Response: The NRC disagrees with the comment. The NRC staff has found reasonable assurance that the possible generation of hydrogen due to cask loading and unloading operations has been evaluated, and that adequate controls are in place to detect and take corrective actions if significant quantities of combustible gases are generated. SAR Subsection 11.2.5 (explosion accident analysis under storage conditions) evaluates the NAC–UMS system subject to an external pressure up to 22 psig, has been accepted by the NRC staff, and provides part of the technical basis for site parameters evaluations performed in accordance with 10 CFR 72.212(b)(3). Further evaluation of the possible effects of an explosion involving hydrogen or other combustible materials under storage conditions is site-specific and beyond the scope of this rulemaking.

Comment C–17: Three commenters stated that the parameters provided in B 3.4(6) of the Approved Contents and Design Features in Appendix B of CoC 1015 are not relevant to the drop accident condition and are not relevant to the tip-over provided that the allowable seismic accelerations are not exceeded (*i.e.,* the cask does not tip over). As a result, the commenters request that Item 6 be revised to read: ''In addition to the requirements of 10 CFR 72.212(b)(2)(ii), the seismic acceleration at the top surface of the ISFSI pad cannot exceed the value provided in B 3.4 (3).''

Response: The NRC agrees in part with the comment in that the parameters are not relevant to the SAR Subsection 11.2.4.3 VCC 24-inch vertical drop accident. These parameters have been removed from the TS as suggested. However, the same set of site concrete pad and soil parameters relevant to the tip-over analysis is being summarized in SAR Subsection 11.2.12 to ensure that the bounding side drop decelerations determined for the NAC-UMS system are available for site specific application without the need for going through additional cask tip-over analysis.

Comment C–18: Two commenters stated the heavy load lifting ability of the transfer and storage systems (described in PSER Section 3.2.3) appears to be inadequately supported and that the systems are not redundant for either attachment or lift capability, and therefore, do not satisfy the requirements for single failure of the lifting equipment. The commenters also stated that the transfer cask trunnions and storage cask lifting lugs are not redundant and do not satisfy the requirements for single failure or the requirements of 10 CFR 72.236(h).

Response: The NRC disagrees with the comment on the adequacy of SAR evaluation for heavy load lifting abilities of the VCC lifting lugs and transfer cask trunnions.

As noted in SER Subsection 3.2.3.4, the SAR demonstrates structural acceptance of the VCC components for the top lift operation in accordance with ANSI N14.6. The basic design stress factors of 3 and 5 against materials yield (S_y) and ultimate (S_u) strengths, respectively, are met with the allowable stress the lesser of $S_y/3$ or $S_u/5$. The commenters were correct that the VCC lifting lugs do not meet the single-failure-proof lifting provision because the lifting lugs provide a single-load path. However, the SAR Subsection 11.2.4 VCC drop analysis is consistent with the assumption of non-single failure proof lifting lugs. Also, the VCC lift lugs do not need to be single failure proof because of accident analysis and administrative controls. The applicant's evaluation of a possible 24-inch vertical drop (limited by controls to a lift height of 24 inches or less) of the VCC was shown to have no significant radiological consequences, and has been accepted by the NRC staff.

On transfer cask trunnions, SER Subsection 3.2.3.1 recognizes that, for a two-trunnion lifting configuration, the maximum trunnion bending stress corresponds to the stress design factors of 9.4 and 20.7 that are larger than the required factors of 6 and 10 against the material yield and ultimate strengths, respectively. Therefore, the structural capability of the trunnions satisfies the ANSI N14.6, Section 7.1, requirements for lifting critical loads with either a dual-load path handling system (with the basic design stress factors of 3 and 5 against materials yield and ultimate strengths, respectively), or a single-load path system with increased design stress factors that double the basic design stress factors.

Comment C–19: Two commenters stated that the criticality analysis as discussed in the PSER Section 6.4 does not provide a listing of the fissile material in the spent fuel assemblies, without which the analysis is questionable and does not satisfy the requirements of 10 CFR 72.236(c). Of particular concern is the concentration of Pu-239 which continues to undergo spontaneous fission and therefore, increased neutron flux.

Response: The NRC disagrees with the comment. The criticality analysis uses the conservative assumption of fresh fuel without burnable poisons. The analyzed fresh-fuel composition is always more reactive than the actual composition of irradiated fuel. Consistent with the fresh-fuel assumption, the criticality analysis lists only the fissile materials present in fresh fuel. Results of the analysis clearly demonstrate compliance with 10 CFR 72.236(c), the requirement that the spent fuel be maintained in a subcritical condition. The NRC notes that the neutron flux arising from spontaneous

fission or other fixed neutron sources in the cask has no bearing on the neutron multiplication factor, k_{eff}. Furthermore, as shown in the shielding analysis, the neutron flux in stored spent fuel arises mainly from the spontaneous fission of Cm-242 and Cm-244. Spontaneous fission of Pu-239 contributes very little to the neutron flux in spent fuel.

D. Design

Comment D–1: One commenter expressed concern about icicles forming and covering the cask vent holes. The commenter stated that more study is needed for full cask array monitoring and cleaning in an ice storm, and that plans should be made for this situation.

Response: TS A.3.1.6, ''Concrete Cask Heat Removal System'' requires that the cask user perform daily surveillance to verify the cask outlet temperature. The method of performing the daily check is a site-specific consideration of the cask user. If the daily temperature surveillance indicates a temperature outside of the acceptable range, then an inspection must be performed within 4 hours to verify that the inlets and outlets are not blocked or obstructed.

Comment D–2: One commenter did not share the NRC's reasonable assurance that cladding will be protected in unloading because it has never really been tried and tested. The commenter stated that this testing needs to be performed on cladding material and that the commenter has been requesting the NRC to prove the cladding integrity for years.

Response: The NRC disagrees with the comment. The NAC–UMS storage cask system design has been reviewed by the NRC. The basis of the safety review and findings are identified in the SER and CoC. Testing is normally required when the analytic methods have not been validated or assured to be appropriate and/or conservative. In place of testing, the NRC finds acceptable analytic conclusions that are based on sound engineering methods and practices. The NRC has reviewed the analyses performed by NAC and found them acceptable. However, as part of an ongoing cooperative research effort (NRC, DOE, and EPRI) regarding long-term performance of spent fuel storage, one spent fuel storage cask has been unloaded and inspected at INEEL in Idaho. Results to date are quite reassuring that the behavior of the casks and fuel assemblies is as expected.

Comment D–3: One commenter asked what is the purpose of adding solar heat to the outer cask surface and averaging over a 12-hour period for the air flow and concrete cask model. The commenter also stated that reducing the view factor when analyzing thermal interaction among casks in an array, as was done for this design, should be done for all cask designs.

Response: The purpose of adding insolation to the air flow and concrete cask model is to include the effect of solar heat on the cask that would heat the outer surface of the concrete cask and reduce heat removal from the canister through the concrete. The amount of solar heat is determined from 10 CFR Part 71 and may be averaged over a 24-hour period per the guidance provided in NUREG–1536, the Standard Review Plan for Dry Cask Storage Systems. The comment that other cask designs should similarly reduce the view factor to compensate for an array arrangement is outside the scope of this NAC–UMS rule.

Comment D–4: Three commenters requested that the language in B 2.1.2 of the ''Approved Contents and Design Features'' addressing preferential loading and center position loading of shortest cooled fuel be revised as follows:

- The last two sentences of the first paragraph of this section should be deleted.
- The second paragraph should be revised to delete reference to the ''basket interior,'' which is described as the ''basket center positions'' in the previous paragraph.
- The third paragraph should be moved prior to the current first paragraph.
- The first sentence of the current second paragraph should be made a separate paragraph, as it is not related to the text that follows.

Response: The NRC has no objection to editing Section B2.1.2 as suggested, because it does not change the loading configuration or the means of accomplishing preferential loading. The specification has been revised consistent with the comment.

Comment D–5: One commenter noted that SER Section 1.1.1 does not specify the material of the tie rods of the BWR basket. The commenter asked why the change in materials to carbon steel for the BWR basket disks were made, necessitating the electroless nickel coating to protect from corrosion. The commenter also asked several other questions about the nickel coating including the criteria for applying the coating; how the coating is checked to ensure it is properly applied; how the coating is checked for long term storage and unloading pressures, stresses, and temperatures; if the NRC has checked the manufacturer's sheets for the coating; and if the BWR support disk coating has been evaluated for material reactions.

Response: The tie rods of the PWR and BWR baskets are fabricated with ASME SA–479 Type 304 stainless steel. The applicant chose carbon steel as the BWR support disk material because it has higher allowable stresses and load carrying capability.

The BWR support disks are coated with electroless nickel in accordance with American Society for Testing and Materials (ASTM) Specification B733–1997 (SC3, Type V, Class 1). The drawings specify the application in accordance with the ASTM specification, and the ASTM specification includes criteria to ensure proper application. All fabrication activities are to be carried out under a quality assurance program that meets the requirements of 10 CFR Part 72. As noted in SAR Section 3.4.1.2.4, the applicant demonstrated that the nickel coating is not expected to react with the spent fuel pool water during loading or unloading operations such that unsafe levels of flammable gas are produced. In the event flammable gases are produced from chemical or galvanic reactions, the procedures of SAR Sections 8.1 and 8.3, which specify that the cask user monitor the concentration of hydrogen gas during welding or cutting operations on the shield lid welds, ensure that accumulation of flammable gases is negligible and that workers are protected. Therefore, the NRC has reasonable assurance that the BWR support disk coating will not react with the spent fuel pool water during loading and unloading to produce unsafe levels of flammable gases.

Comment D–6: Two commenters stated that neither the PSER nor the PSAR explain how consolidated fuel assemblies that have been canned will maintain confinement in the NAC–UMS system. They also note that the process of consolidation is expected to produce broken/damaged rods and that the screens will not confine the powder form (U_3O_8) of the fuel.

Response: This comment is beyond the scope of this rule. For this rulemaking, the NAC–UMS storage system SAR only considers the storage of intact spent fuel that meets the limits as specified in the TS.

Comment D–7: One commenter questioned the design and performance of the transfer cask extension and asked if it had been evaluated in relation to all evaluations for the TSC itself. The commenter asked if there is any possibility that the active fuel region could be pulled up into the extension area of the transfer cask and if all risks

associated with use of the extension have been evaluated.

Response: The extension for the transfer cask is needed to provide gamma shielding to the workers while the transfer cask is being moved from the spent fuel pool to the VCC. The extension provides gamma shielding when the overall height of a standard fuel assembly has been increased due to the insertion of a control assembly. Because there is no neutron source associated with the control assembly, the NS-4-FR neutron shield is not needed. Because of the distribution of the active fuel region of a fuel assembly and the configuration of the transfer cask, the possibility of the active fuel region being pulled up into the extension is improbable.

The structural performance of the bolts that attach the transfer cask extension to the PWR Class 2 transfer cask has been evaluated in SAR Subsection 3.4.3.3.4 for inadvertent TSC lifting against the retaining ring. Subsection 3.2.3.1 of the SER evaluates transfer cask load bearing components, including the transfer cask extension, and concludes that they are structurally acceptable.

Comment D–8: Three commenters stated that a number of the NAC–UMS license drawings require some minor revisions, citing that the initial fabrication processes for the NAC–UMS have identified the need for additional clarifications and corrections to address editorial omissions for some of the current license drawings. The commenters noted that the requested revisions do not constitute design changes to the components or require revision of the existing SAR text or supporting evaluations. The commenters also stated that the incorporation of the requested revisions will significantly enhance the fabrication inspection process and allow authorized users of the NAC–UMS System to fabricate the components without processing 10 CFR 72.48 evaluations for minor variations with the current license drawings. The commenters' comments relate specifically to the following drawings: 790–559, 790–560, 790–561, 790–562, 790–563, 790–564, 790–570, 790–575, 790–581, 790–582, 790–583, 790–584, 790–585, 790–595, and 790–605.

Response: The NRC agrees, with the exception of the addition of NS–3 as a neutron shield material in the VCC shield plug, that the additional clarifications and corrections to address editorial omissions on the drawings do not constitute design changes to the components or require revisions to SAR text or the NRC's CoC, TS, or SER. The characteristics and evaluation of the use of NS–3 neutron shielding material have not been provided in the SAR; thus the NRC considers this aspect to be a design change. The NRC considers enhancements to the fabrication inspection process as a result of the drawing changes beneficial to all stakeholders.

Comment D–9: Three commenters requested that B.2.2.3 of the Approved Contents and Design Features be revised to indicate the phrase ''or demonstrate'' between the (existing) words ''restore'' and ''compliance.''

Response: The NRC agrees with the proposed clarification of the TS, and it has been revised accordingly.

Comment D–10: Three commenters requested that the following additional note be added to both Tables B2–2 and B2–4 of the Approved Contents and Design Features: ''Parameters shown are nominal pre-irradiation values.''

Response: The NRC agrees with the proposed clarification of the TS, and it has been revised accordingly.

Comment D–11: One commenter noted that a 24-inch drop would result in permanent deformation of the air inlets of the TSC pedestal and loss of part of the inlets. The commenter did not believe that the pedestal should be part of the inlets.

Response: The NRC disagrees with the comment. The air inlets are an integral part of the pedestal or base weldment. The base weldment, that supports the TSC is expected to undergo yielding and partial collapse in a 24-inch drop of the VCC. SAR Subsection 11.2.4 presents the finite element analysis for calculating a bounding TSC deceleration and corresponding VCC base weldment deformation, that have been evaluated in SER Subsection 3.3.5.2. The NRC agrees with the SAR assessment that the 1-inch deformation of the air inlets is small compared to the 12-inch height of the air inlet because the effect of this deformation is bounded by the blockage of half of the air inlets evaluated in SAR Subsection 11.1.2 for satisfying the radiological dose limits of 10 CFR 72.102(a). It is important to note that although the accident evaluation for the concrete cask 24-inch drop has determined that the cask will remain functional and that there would be no radiological impact from the event, a full evaluation and corrective action of such an event's effects on cask performance, such as replacing the damaged VCC, would be performed according to the cask users corrective action and quality assurance processes.

Comment D–12: Three commenters requested that B 3.5.2.1 (4) of the Approved Contents and Design Features be revised to read: ''The CHF design shall incorporate an impact limiter for CANISTER lifting and movement if a qualified single failure proof crane is not used.''

Response: The NRC agrees with the comment. B 3.5.2.1 (4) has been revised as suggested.

Comment D–13: Three commenters agreed that the following parameter definition clarifications are needed to Table B3–2 of the Approved Contents and Design Features: ''D'' should be revised to read ''Crane hook dead load'' and ''D*'' should be revised to read ''Apparent crane hook dead load''.

Response: The NRC agrees with the comment. Table B3–2 has been revised as suggested.

Comment D–14: Two commenters stated that the process of placing the spent fuel in the canister is not adequately justified as required by 10 CFR 72.236(l). The industry consensus standard, ANSI/ANS–57.1, ''Design Requirements for Light Water Reactor Fuel Handling Systems'' requires a translation inhibit for the spent fuel handling equipment. The commenters commented that although the standard permits an allowed bypass for this interlock, the bypass is limited to a jogging function. The NAC–UMS procedures do not make it clear that installed bypasses must be performed step-by-step as required by the standard, not in a continuous motion. The commenters stated that the handling equipment of a plant applying for approval to load dry storage canisters should be checked for continuous translation bypass in sensitive areas to eliminate the potential for a major radioactive dispersal accident.

Response: This comment is beyond the scope of this rule. Safe fuel handling practices at reactor sites, including cask loading and unloading operations, are the responsibility of the 10 CFR Part 50 licensee. Section 72.212 requires general licensees to determine if activities related to the storage of spent fuel involve any unreviewed safety question or change in the facility TS. The general licensee's evaluations and spent fuel handling practices are subject to regulatory oversight by the NRC's inspection process.

Comment D–15: One commenter was concerned that a fuel assembly with too short bottom hardware can extend below the bottom of the poison panels, and asked if requiring a minimum length of bottom hardware will prevent this extension and if workers will measure it correctly. The commenter thought it would be safer to have longer poison panels and asked if cost-cutting is a factor.

Response: Requiring a minimum length of bottom fuel hardware will indeed prevent the bottom of the active fuel from extending below the bottom of the poison panels under normal and accident conditions. The length of a fuel assembly's bottom hardware is usually known from the fuel design drawings or other fuel records. When this is not the case, the NRC sees no significant difficulties in the use of simple in-pool measurements (e.g., with a video camera and ruler) to adequately determine the bottom hardware dimensions. Because the required minimum length of fuel bottom hardware and spacer effectively precludes unanalyzed configurations of the fuel and poison, the NRC finds no basis for requiring NAC to use longer poison panels. The NRC has not considered cost factors in concluding that the cask design complies with the applicable safety regulations.

E. Welds

Comment E–1. One commenter asked why partial penetration welds should be acceptable for the shield and structural lids. The commenter does not consider the closure redundant if the shield lid cannot be ultrasonically tested and stated that the structural lid needs a full penetration weld with ultrasonic testing because this area is crucial.

Response: The NRC accepts the closure weld's configuration and examination in accordance with Interim Staff Guidance-4, Revision 1 that allows the use of a partial penetration closure weld and a multi-layer (i.e. progressive) liquid penetrant (PT) surface examination in lieu of a volumetric examination. Furthermore, ASME Code Case N–595–2, ''Requirements for Spent Fuel Storage Canisters'' permits partial penetration welds for end closures using two cover plates and liquid penetrant examination of the weld.

Comment E–2: One commenter was concerned about the pedestal weldment, stated that one inch may make a big difference in deformation, and asked if all possible problems have been examined.

Response: The pedestal weldment that supports the TSC, is expected to undergo yielding and partial collapse in a 24-inch drop of the VCC. SAR Subsection 11.2.4 presents a finite element analysis for calculating a bounding TSC deceleration and corresponding pedestal air inlets deformation that has been evaluated in SER Subsection 3.3.5.2. The NRC agrees with the SAR assessment that the 1-inch deformation is small compared to the 12-inch height of the air inlet. Also, the effect of this deformation is bounded by that of the blockage of half of the air inlets that has been evaluated in SER Subsection 11.1.2 for satisfying the radiological dose limits of 10 CFR 72.102(a). See also related response D–11.

F. Structural Evaluation

Comment F–1: One commenter asked why the pedestal plate and cask base plate are carbon steel and not stainless steel. The commenter asked for an explanation of the pedestal plate: how it is used, for what purpose, what shape it is, can it rust to the cask bottom plate and the canister bottom plate creating a problem in pulling out the canister, why is it not ceramic, why the VSC–24 necessitated ceramic tiles, and what it does long term in storage.

Response: As depicted in SAR Figure 11.2.4–1 and Drawing 790–561, the pedestal or weldment plate is a 2-inch thick, 67.5-inch diameter, horizontal circular carbon steel plate. It provides a direct bearing surface to the TSC for transmitting gravity and impact vertical loads, through the vertical ring and inner cone baffle weldments, to the VCC support pad. Detail B-B of SAR Drawing 790–560 shows that a ¼-inch thick stainless steel plate is installed between the TSC bottom and the pedestal plate. The stainless steel plate isolates the TSC from the VCC carbon steel base plate. This configuration will prevent the carbon steel pedestal plate from rusting to the stainless steel TSC canister bottom. Therefore, no adherence force will develop to cause any shifting, deforming, or cracking of the pedestal plate in handling, as suggested.

Analysis of the VSC–24 cask design is beyond the scope of this rule.

Comment F–2: Two commenters noted that although the PSER structural analysis (Sections 3.1 and 3.4) discusses three types of tornado-generated missiles, there is no analysis of a terrorist attack in the form of a fired missile. Foreign regulatory agencies are now requiring such an analysis. The commenters commented that the need for the analysis is driven further by a common location of the ISFSIs near international waters and that the recent introduction of high penetrating depleted uranium missile shells adds to the concern of a terrorist event. The commenters stated that an analysis of the vulnerability of an ISFSI to such an attack may identify the need for sturdier storage module surfaces, an expanded site security area, or a storage enclosure, and that without such an analysis, the application does not satisfy the requirements of 10 CFR 72.236(l).

Response: The NRC disagrees with the comment. The NRC reviewed potential issues related to possible radiological sabotage of storage casks at reactor site ISFSIs in the 1990 rulemaking that added Subparts K and L to 10 CFR Part 72 (55 FR 29181; July 18,1990). The NRC regulations in 10 CFR Part 72 establish physical protection requirements for an ISFSI located within the owner-controlled area of a licensed power reactor site. Spent fuel in the ISFSI is required to be protected against radiological sabotage using provisions and requirements as specified in 10 CFR 72.212(b)(5). Further, specific performance criteria are specified in 10 CFR Part 73. Each utility licensed to have an ISFSI at its reactor site is required to develop physical protection plans and install systems that provide high assurance against unauthorized activities that could constitute an unreasonable risk to the public health and safety.

The physical protection systems at an ISFSI and its associated reactor are similar in design features to ensure the detection and assessment of unauthorized activities. Alarm annunciations at the general license ISFSI are monitored by the alarm stations at the reactor site. Response to intrusion alarms is required. Each ISFSI is periodically inspected by the NRC. The licensee conducts periodic patrols and surveillances to ensure that the physical protection systems are operating within their design limits. It is the ISFSI licensee who is responsible for protecting spent fuel in the casks from sabotage rather than the certificate holder. Therefore, the commenter's interpretation of 10 CFR 72.236(l) as requiring the cask design to be analyzed for specific forms of terrorist attacks is beyond the scope of this rule.

Comment F–3: One commenter noted that the NAC–MPC VCC weighs 155,000 pounds and that the NAC–UMS VCC weighs between 221,000 and 238,000 pounds empty, and asked if this weight has been evaluated for all systems. The commenter also asked why the UMS wall is 7 inches thicker than the MPC and the carbon steel liner thickness is 1 inch less in the UMS than in the MPC, suggesting that more concrete and less steel was used to cut costs.

Response: The weights for five classes of VCC listed in SAR Table 1.2–5 have been considered to establish bounding values for evaluating structural performance of the NAC–UMS system. The design for the thickness of the concrete wall and its liner plate for different storage cask systems is NAC's choice to meet various cask performance objectives such as protection from tornado missiles and radiation shielding and heat rejection. The design has been

evaluated in the SAR and found acceptable by the NRC.

Comment F–4: One commenter asked why in Section 3.1.1.3 of the SER the transfer cask extension is identified as ''low alloy steel'' instead of ''carbon steel.''

Response: The NRC recognizes that the transfer cask extension is fabricated with the ASTM A516, Grade 70, carbon steel, per SAR Drawing 790–560. Accordingly, SER Subsection 3.1.1.3 is revised to read: ''The transfer cask extension is a carbon steel ring designed to be bolted to the transfer cask.''

Comment F–5: Three commenters noted that either plate or forging material specified in ASME SA240 or ASME SA 182 should be permitted for both the shield lid and structural lid of the TSC. The commenters stated that only minor differences exist between the properties of each material and that these differences do not affect the performance of the components in the NAC–UMS System.

Response: The NRC agrees with the comment. NAC has noted in SAR Section 3.4.4.1.11 that the forged material is required to have ultimate and yield strengths that are equal to or greater than the plate material. This ensures that the critical flaw size determination is applicable to both the SA–240 and SA–182 materials. SAR Drawing 790–584 has been revised to permit the use of ASME SA182 as an alternate to SA240 for both the shield and structural lids of the TSC.

G. Thermal Evaluation

Comment G–1: One commenter asked how the NRC can assure the public that determination of the design basis decay heat load was done properly and who checks this determination.

Response: The design basis heat load is determined by the applicant, supported by their calculations, loaded in accordance with their procedures, and demonstrated to be in compliance with the design by TS surveillance measurements of the cask air inlet and air outlet temperatures. The NRC reviewed the SAR to provide assurance that the thermal design meets the regulations and performs as intended. The NRC, as stated in Section 4.3 of the SER, confirmed through analysis a sample of the decay heat loads identified in the SAR and verified through independent analysis that the design bases heat load is bounding. The NRC has concluded that the design bases heat load was determined properly. The user has the responsibility to load the canister in accordance with site-specific operating procedures that reflect the TS limits, including those limits imposed on heat load.

Comment G–2: One commenter considered the fuel cladding temperature increase and reduction in normal temperature margin to be quite large when a sensitivity analysis was performed on fabrication tolerances on gap size between the support/heat transfer disks and the canister shell. The commenter asked if the fabrication tolerances can be tightened.

Response: The NRC evaluated the effect of fabrication tolerances and has determined that the consequences are acceptable. Further ''tightening'' of tolerances may hinder fabrication of the canister/basket assembly and possibly adversely effect spent fuel loading and unloading operations.

Comment G–3: Three commenters requested that the language of LCO 3.1.1 (Canister Maximum Time in Vacuum Drying) with respect to ''in-pool cooling'' be clarified to not restrict this cooling to only the spent fuel pool. The commenters noted that in some plant configurations, the use of the cask loading area or area other than the fuel pool may be desirable for providing cooling. The commenters also request that the second frequency for both surveillance requirement 3.1.1.1 and surveillance requirement 3.1.1.2 be revised to read: ''as required to meet the Limiting Condition for Operation (LCO) time limits.''

Response: The NRC disagrees with the comment. Insufficient information has been provided to describe the alternative to in-pool cooling. Spent fuel pools are maintained in a specific temperature range whereas the proposed alternative appears not to be limited in either temperature or configuration. Currently, more than one cooling method is provided because the referenced LCO 3.1.1 does allow forced air cooling as an alternative to in-pool cooling. Adding ''as required to meet Limiting Condition for Operation (LCO) time limits'' to the second frequency of surveillance requirement (SR) 3.1.1.1 and SR 3.1.1.2 more clearly identifies the required time intervals, is acceptable to the NRC staff, and has been revised accordingly.

Comment G–4: Three commenters stated that under LCO 3.1.6 (Concrete Cask Heat Removal System), SR 3.1.6.2 should be deleted. The commenters noted that this surveillance is already required under A 5.4, ''Administrative Controls and Programs'' and that A 5.4 should be revised to clearly state for which off-normal, accident, or natural phenomena events the surveillance should be performed. The commenters stated that reference to Chapter 11 of the SAR, NUREG–1536, or 10 CFR 72.24 and 72.122 would identify events that would require surveillance.

Response: The NRC agrees with the comment to delete SR 3.1.6.2 because Administrative Control A 5.4 ensures that the ISFSI will be inspected within 4 hours of an off-normal, accident, or natural phenomena event to ensure that at least half of the air inlets and outlets on each concrete cask are free of blockage within 24 hours. Also, SR 3.1.6.1 requires a comparison of the cask outlet temperature to the ambient temperature every 24 hours. However, the NRC does not agree to list the specific events in A 5.4 that could cause blockage because SAR Chapter 11 does not provide a comprehensive listing, but instead gives examples of possible events.

Comment G–5: Two commenters noted the NAC–UMS system dissipates heat through conduction from the center of the fuel assembly-filled canister to the canister walls and away from the canister through natural convection by air circulation over the canister's outer surface. The commenters stated that the analysis of the expected configuration described in the PSER Section 4.4.1.2 is based on an unrealistic physical model that assumes concentrically centered fuel assemblies. In fact, conduction is radial (not axial) and is based solely on the physical contact of the fuel assembly with the basket holding the assemblies. The commenters stated that because the NAC–UMS system is a vertical storage system, there is a potential for nonuniform physical contact between the basket and the fuel assembly and that for this reason, hot spots may develop along the axial direction of the fuel rod. The commenters stated that the PSER does not analyze the degradation effects of these hot spots to assure cladding integrity throughout the license storage period and thus, the application does not satisfy the requirements of 10 CFR 72.236(b), (e), (f), and (l).

Response: The NRC disagrees with the comment. The SAR clearly states that conduction and radiation are modeled in the axial and radial directions. Certain aspects of heat transfer are conservatively ignored (e.g. radiation heat transfer from the fuel tubes, and contact between fuel assemblies and fuel tubes, fuel tubes and support/heat transfer disks, and support/heat transfer disks and the canister wall). Consideration of these omissions would only increase the heat transfer from the basket assembly and result in a lowering of the calculated fuel cladding temperature.

Comment G–6: Three commenters stated that to provide for a safer approach and greater flexibility in the loading and use of the NAC–UMS System, the TS should be revised to extend the LCO completion time frames based on a variable heat loading, as appropriate. The commenters noted that the design basis heat load time frames do not provide for an optimal approach to the loading and use of the first canister or those canisters that contain fuel with significantly lower heat loads. The commenters indicated that lower thermal loading will provide for extended time frames for many of the current LCO's and enhance operational safety when loading a canister with lower heat loads. The commenters propose that time frames for 20kW, 17kW, 14kW, 11kW, and 8kW be added to the current 23kW design maximum heat load used in developing the current LCO time frame.

Response: The NRC agrees with the comment in principle; however, the NRC considers the certificate amendment process the most appropriate vehicle for implementing such a change at this time. The NRC has already completed its evaluation and solicited public comments by the rulemaking process, based on the request contained in the application. Extensive changes to the TS to include 5 levels of lower cask heat loads, with corresponding changes to the LCO completion time frames, would necessitate additional NRC review and changes to the CoC and SER to an extent that would warrant soliciting additional public comments on the proposed changes. The NRC notes that similar modifications have already been submitted for NRC review in connection with a certificate amendment request to accommodate the contents of the Maine Yankee spent fuel pool.

H. Technical Specifications

Comment H–1: One commenter stated that the evacuated envelope helium leak test sounds inadequate and that the sniffer probe is not the greatest test either. The commenter said that if the shield lid weld cannot be ultrasonically tested, the weld cannot be called a redundant seal. The commenter has concerns for future leakage, especially in shield lid welds, because of the perceived flaws possible in these lid welds.

Response: The NRC disagrees with the comment. For the types of helium leak tests proposed, the NRC found that these tests are capable of detecting leaks to the required sensitivity provided they are performed properly. Furthermore, liquid penetrant examinations are performed on all field welds' root and final surfaces, or progressive liquid penetrant examinations (*i.e.* root, mid-plane, and final surface of the structural closure weld) in accordance with Interim Staff Guidance ISG–4. For the type of welding process, the environmental conditions near the weld, and the austenitic stainless steel weld base material, there are no known delayed cracking mechanisms that could cause the weld to crack after it has been examined. Subsequent to completing the shield lid field weld, a pneumatic pressure test is performed and then a helium leak test is conducted in accordance with the leak-tight criteria of ANSI N14.5. These tests and examinations have been accepted by the NRC as assurance that the requirements of 10 CFR 72.236(e) for redundant sealing of the confinement boundary have been met.

Comment H–2: One commenter objected to the use of progressive liquid penetrant examination (PT) instead of ultrasonic examination (UT) for the structural lid-to-shell weld. The commenter stated the NRC's justification of allowable flaw size is inadequate and needs reevaluation. The commenter commented that the NRC admits progressive PT is not in agreement with ASME code and that making it easier to test welds and accept flaws is in the favor of the utility and vendor, not the safety of the public and workers. The commenter also stated that ''sufficient intermediate layers'' is an inadequate requirement that should be more specific.

Response: The NRC accepts examination of the cask closure welds in accordance with Interim Staff Guidance-4, Revision 1 that allows the use of a multi-layer (*i.e.* progressive) liquid penetrant (PT) examination in lieu of a volumetric examination. As stated in the ISG, the critical flaw size is determined in accordance with ASME Section XI methodology and is used to determine the spacing between successive PT examination layers. There is enough experience with the progressive PT method to conclude with reasonable assurance that it will detect flaws that are open to the surface and are of a size that would affect the serviceability of the weld. The probability of a failure to detect a flaw of this size because it did not break the surface is low because the liquid penetrant test is undertaken at intermediate weld pass levels (*i.e.* at ⅜ inch for the ⅞-inch thick structural lid closure weld) as well as at the root and final weld passes.

Comment H–3: Three commenters stated that LCO 3.1.6 (Concrete Cask Heat Removal System) should be revised to modify Required Action B.2.2 to allow for the use of supplemental cooling to the concrete cask with a completion time of 12 hours. The commenters also requested a deletion of the reference to transferring the canister to the transfer cask, as use of the transfer cask only is overly restrictive and may not be feasible in some conditions.

Response: The NRC disagrees with the request to change LCO 3.1.6 to provide an alternative to cooling the canister (by presumably providing some form of forced convection) prior to being required to remove it from the concrete cask. No details have been provided that describe how this would be accomplished. Therefore, this request is not acceptable to the NRC. Additionally, in the NRC's judgment, the use of the transfer cask to provide a means of cooling should remain as an option.

Comment H–4: Three commenters stated that the language of LCO 3.1.5 (Canister Helium Leak Rate) should be revised to read ''demonstrate a helium leak rate of less than or equal to'' rather than ''demonstrate a helium leak rate of less than.''

Response: The NRC agrees with the comment. The TS has been changed to incorporate the change in wording.

Comment H–5: One commenter noted that ISG No. 3 lets the vendor and utility ''off the hook'' as to letting the public know an analysis of the dose consequence from a ground level canister breach with 100% fuel rod failure because it is not credible and the analysis is unnecessary. The commenter's view was that vendors and utilities do not want this analysis out to the public to reduce fear of such a failure. The commenter stated that dry cask storage is in its infancy and that such a failure is possible. The commenter said that the public deserves to know dose consequences of all related events, the NRC should be for public and worker safety, and the more information and education the public can get on dry cask storage, the more the public can help solve the problems and ask the right questions.

Response: The NRC disagrees with the implication that ISG–3 was developed to reduce the fear of the public to nonmechanistic accidents such as noncredible failures of the confinement boundary. ISG–3 clarifies the distinction between retrievability and postaccident recovery, and focuses on the identification and evaluation of all credible accident scenarios affecting public health and safety. ISG–3 specifically places emphasis on identifying accidents with potential consequences resulting in the failure of

the confinement boundary and also recommends the modification of emergency plans and event detection capabilities to ensure that licensees have the ability to identify an accident or non-compliance situation. The NRC agrees with the remainder of the comment regarding the rights of the public pertaining to the dose consequences of credible events, concerns regarding public and worker safety, and providing information that enhances the overall understanding of dry cask storage.

Comment H–6: Three commenters requested that Section A5.2 [after A5.2 (n)]of the TS be revised to add the following sentence: ''Appropriate mockup fixtures may be used to demonstrate and/or to qualify procedures, processes, or personnel in welding, weld inspection, vacuum drying, helium backfilling, leak testing, and weld removal or cutting.''

Response: The NRC agrees with the proposed clarification of the TS and it has been revised accordingly.

Comment H–7: Three commenters requested that Table A5–1 of the TS be revised to indicate a Lifting Height Limit of ''<24 inches.'' The commenters noted that this requested change is consistent with Section 11.2.4.2 of the Preliminary Safety Evaluation Report.

Response: The NRC agrees with the comment. Table A5–1 of the TS has been revised as suggested.

I. Miscellaneous

Comment I–1. One commenter recommended that the SAR title shown in the proposed cask CoC state ''as amended'' instead of ''Revision 2.'' The commenter commented that identifying a specific SAR revision in the CoC may imply that a CoC amendment requiring prior NRC approval would be required to amend or revise the FSAR. However, the approved changes to 10 CFR 72.48 will allow the cask certificate holder to make changes to the FSAR without prior NRC approval. Also, 10 CFR 72.248 requires the cask certificate holder to periodically update the cask FSAR. Therefore, it would be more accurate and reflect the 10 CFR 72.48 change process and the 10 CFR 72.248 FSAR update requirement if the SAR title shown in the CoC were to state ''as amended.'' This is typically how Part 50 reactor operating licenses refer to the reactor FSAR.

Response: The NRC agrees with the comment. The SAR Title shown on the CoC has been revised to delete a reference to a particular SAR revision number.

Comment I–2: Two commenters stated that neither the applicant nor the NRC has analyzed the impact of pinhole and hairline crack cladding defects over the 20-year license period, much less over the likely storage duration. The commenters stated that extraordinary attention must be given to the removal of water from the loaded canister and that the proposed vacuum drying process will not remove the water completely. They also asserted that available water will react with UO_2 based fuel to form a U_3O_8 phase that could lead to unzipping of the cladding with hairline cracks or pinhole leaks. Therefore, they believe emerging research shows that incomplete drying of the spent fuel before storage combined with demonstrated physical processes can enlarge those defects and ''unzip'' the cladding, thus breaching a primary containment barrier for the fuel.

Response: The NRC agrees that vacuum drying is an important procedure to prevent the degradation of the spent fuel cladding during storage. However, the NRC disagrees that the impacts of pinhole and hairline crack cladding defects on long term storage have not been evaluated.

All spent fuel storage cask licensees are required to conduct vacuum drying and inert gas backfilling operations to remove oxidizing species from the cask and prevent cladding degradation. As discussed in the report, ''Evaluation of Cover Gas Impurities and Their Effects on the Dry Storage of LWR Spent Fuel'' (Report Number PNL–6365), and as described in the Standard Review Plan for Dry Cask Storage Systems (NUREG–1536), the combination of the low pressure and elevated temperature of the spent fuel during vacuum drying should remove all of the water from the cask and oxidizing species to an amount less than 1.0 gram-mole. More specifically, after the liquid water has been removed from the storage cask, the air and water vapor are evacuated from the cask until a steady pressure of less than or equal to 3 millimeters of mercury (mm Hg) is achieved and maintained for 30 minutes. Then, the cask is backfilled with helium gas before a second cycle of vacuum drying (*i.e.*, 3 mm Hg for another 30 minutes) is performed. The cask user is required, by the operating procedures in the SAR and in the TS to perform the vacuum drying procedure to ensure there is less than 1.0 gram-mole of oxidizing gases in the cask. These procedures reduce the levels of oxidizing gases to concentrations below those that could cause the fuel to oxidize to the U_3O_8 phase and produce larger gaps in cladding with existing pinhole or hairline crack defects. Therefore, the NRC has reasonable assurance that, if cask licensees conduct the vacuum drying and inert gas backfilling procedures in accordance with the TS of the SAR, the cladding will be protected from gross ruptures (or ''unzipping'') during storage.

Comment I–3: Two commenters stated that the applicant has not provided reasonable assurance that the NAC–UMS storage system will maintain the required level of confinement integrity in the proposed dry storage installation under the known, normal conditions; has not provided the required assurance that the single failure-proof confinement requirements for cladding and cask integrity will be unimpaired during the expected storage interval; and in particular, has not provided assurance that the integrity of the primary confinement barrier (cladding) will be maintained during the licensed period from cask closure until relicensing or shipment. The commenters also stated that the absence of a primary barrier violates the single failure requirement in 10 CFR 72.236(e) for confinement of the radioactive material.

Response: The NRC disagrees with the comment. In general, the spent fuel cladding is not considered to be the primary confinement boundary of a dry storage cask. Cladding integrity is very important to prevent the fuel from redistributing in the storage cask and to ensure that any release of radioactive material from the cladding has been analyzed in the SAR. For example, one assumption of the confinement analysis is that 1%, 10%, and 100% of the fuel source term are available for release from the cladding under normal, off-normal, and hypothetical accident conditions, respectively. As a conservative approach, the analyses are conducted with those source term release fractions even though there may be no pinholes or hairline cracks in the cladding under normal, off-normal, and hypothetical accident conditions. Further, the NRC has reasonable assurance that existing cladding integrity will be preserved by both maintaining cladding temperatures below the calculated temperature limits and conducting vacuum drying operations in accordance with the TS. (Also, refer to the responses to comments C–6 and I–2.)

As noted in SER Section 7.1, the primary confinement boundary of the NAC–UMS storage system includes the TSC shell, bottom baseplate, shield lid (including the vent and drain port cover plates), and the associated welds. The shield lid (with the vent and drain port cover plates welded to the lid) and the structural lid are independently welded to the upper part of the TSC shell. This

design provides redundant sealing of the confinement boundary and satisfies the requirements of 10 CFR 72.236(e). Therefore, through the analyses presented in SAR Chapter 7, the applicant has demonstrated that the NAC–UMS storage system will maintain the required level of confinement integrity under all conditions of storage. As documented in SER Chapter 7, the NRC concludes that the design of the confinement system of the NAC–UMS storage system is in compliance with 10 CFR Part 72.

Comment I–4: One commenter stated that control components should be low level waste and that only high level waste should be allowed in high level waste containers being sent to a repository. The commenter thinks that failure to separate high and low level waste will result in more handling and confusion in the long run.

Response: The NRC has issued Interim Staff Guidance No. 9, entitled, ''Storage of Pressurized Water Reactor (PWR) Fuel Assembly Integral Hardware'' to address the authorized storage of control components in spent fuel storage casks. Although control rods are specifically excluded from the NAC–UMS authorized contents, other integral components (*e.g.*, burnable poison inserts and thimble plugs) associated with fuel assemblies have been requested as authorized contents. The NRC's evaluation considered the guidance of ISG–9 in the preliminary SER as it relates to storage under 10 CFR Part 72. The aspects of the comment pertinent to the separation of high and low-level wastes and the future acceptance criteria at a repository are beyond the scope of this rule.

Comment I–5: One commenter noted that two cycles of vacuum drying and helium backfilling are specified for this cask design, and asked if the VSC–24 casks at Palisades and Pt. Beach did not have this done, how safe are those casks and is there any water vapor in the casks.

Response: This rule pertains solely to the evaluation and safe operation of the NAC–UMS storage cask design. Comments pertaining to the VSC–24 or any other cask design were not a subject of the NRC's evaluation of the NAC–UMS design, and are thus beyond the scope of this rule.

Comment I–6: One commenter stated that during cooldown for reflooding, very detailed definite criteria are needed for the steam and water being discharged. The commenter also stated that each cask user should have site-specific procedures in place to add to generic procedures so that all is ready before any cask is loaded, and that the NRC needs to check this activity.

Response: The NRC has reviewed and accepted the generic unloading procedure guidance contained in SAR Chapter 8 that includes detailed criteria to control the evolution. Detailed loading and unloading procedures prepared using the technical basis established in the SAR are a site-specific aspect that is beyond the scope of this rule.

Comment I–7: One commenter stated there should be definite criteria regarding records as to what are permanent and not left up to the licensees to decide, resulting in faded photographs and videos that have disappeared. The commenter suggested checking with experts on permanent recordkeeping.

Response: 10 CFR Part 72, Subpart G, requires that records pertaining to the design, fabrication, erection, testing, maintenance, and use of systems, structures, and components important to safety be maintained until decommissioning of the cask is complete. Criteria for records are specified in Subpart G.

Comment I–8: One commenter remarked that ''mobile lifting frame'' sounds very vague. The commenter asked if the mobile lifting frame is a transporter, how it works, and if it has been developed.

Response: The TS in the ''Design Features'' section establishes requirements for the design and operation of a canister handling facility, including any mobile lifting devices. The specific design for a mobile lifting frame was not, and is not required to be, submitted as part of the approval for the NAC–UMS storage cask design. Such a design, if implemented in the future, must be consistent with the cask design basis described in the SAR, the TS, and implemented on a site-specific basis in accordance with existing heavy-loads provisions at a facility licensed under 10 CFR Part 50.

Comment I–9: One commenter stated that the off-normal and accident conditions always assume a cask is fabricated correctly, and asked what problems could occur if there were fabrication problems. The commenter thought fabrication problems and worker mistakes are the leading concerns with dry casks, stated that is why the design has to have the best review possible, and that instructions and criteria have to be simple and clear. The commenter said that the casks will be on the pads forever and the issuance of a CoC should not be rushed.

Response: The NRC agrees that instructions and criteria should be clear and that issuance of a CoC should not be rushed. Part 72 CoCs are issued for 20 years and are then subject to review for renewal, if applicable. The NAC–UMS design has been under NRC review since 1997.

The NRC's approval of cask designs does rely, in part, on the design, fabrication and operation being conducted under an approved quality assurance (QA) program. An approved QA program includes programmatic controls of non conformances, corrective actions, and audits. The NRC has found reasonable assurance that the approved design, manufactured under an approved QA program, will ensure public health and safety under all normal, off-normal, and accident conditions.

Comment I–10: One commenter stated that a quality assurance program is only as good as it is put to use, and that NRC's unannounced visits to contractors and subcontractors are very important. The commenter also stated that licensees need to give full documentation to changes in the design and keep the SAR current.

Response: The NRC agrees with the comments.

Comment I–11: One commenter stated the ''main problem'' is that nothing in the review considers or involves the review of ultimate disposal of spent nuclear fuel and speculated that Yucca Mountain will never open. The commenter made several general comments about storage and disposal of nuclear waste and alternative forms of energy, and suggested that as more spent nuclear fuel is handled and transported, the probability of more problems will arise.

Response: Comments regarding the future use of a repository, transport and disposal of nuclear waste, and alternative energy forms are beyond the scope of this rule. The NRC recognizes its responsibility to ensure the public's health and safety, independent of the amount of spent fuel handling and transport that occurs under its regulatory oversight, now and in the future.

Comment I–12: One commenter asked how the 5-inch carbon steel temporary shield is used during welding, draining, drying, and helium backfill operations.

Response: A carbon steel temporary shield is placed over the transport cask top to shield workers from the loaded canister. Because gamma radiation is the predominant radiation emitted from the top of the canister, the 5-inch thick carbon steel temporary shield will reduce the gamma radiation dose to the workers.

Comment I–13: One commenter asked for an explanation and dates of the skyshine experiments performed at Kansas State University.

Response: The Skyshine-III, version 4.0.0 code was benchmarked with a Co^{60} skyshine experiment and a neutron skyshine calculation, both reported by Kansas State University (KSU). The Co^{60} skyshine experiment was performed for a Co^{60} source in a concrete silo with two different thickness roofs and no roof. The KSU neutron benchmark computations were performed for upward directed conical neutron point sources. Skyshine experiments are performed at KSU on an on-going basis. Discussions of skyshine experiments can be found in the book, ''Radiation Shielding'' by J. Kenneth Shultis and Richard E. Faw, published by Prentice Hall PTE, 1996 and also in the SKYSHINE–III PC and SKYSHINE–KSU computer code manuals. The codes and manuals are available from the Oak Ridge National Laboratory's Radiation Safety Information Computational Center.

Comment I–14: One commenter was concerned with computer models and the wording in Section 5.3 of the SER that states ''input for these codes * * * appears to be appropriate.'' The commenter asked if the input is correct.

Response: The input data used by NAC for determining the source term of the design basis PWR and BWR nuclear fuel is acceptable. The NRC staff performed independent calculations to confirm NAC's evaluation of the source terms. The SAS2H module of the SCALE computer code uses a free form style for inputting the data that must be carefully reviewed to determine which keywords and variables have been used in the input. Also, the various fuel parameters can have a range of acceptable values that may be used in the input.

Comment I–15: Three commenters requested that Section 1.b (page 2 of 4, last paragraph) of the CoC be revised to read: ''To minimize contamination of the Transportable Storage Canister (TSC) exterior and interior of the transfer cask, clean water is circulated in the gap between the transfer cask and the Transportable Storage Canister (TSC) during loading.''

Response: NRC agrees with this comment. The CoC has been revised accordingly.

Comment I–16: Two commenters stated the PSER does not address the impact of the NAC–UMS cask storage system on stormwater quality.

Response: Stormwater quality is beyond the scope of this rule. Any applicable stormwater quality issues will be addressed in the 10 CFR Part 72.212 site-specific evaluations performed prior to using the cask.

Comment I–17: One commenter recommended that the wording in SER 5.4.3 be: ''Consequently, final determination of compliance with 72.104(a) is the responsibility of each Independent Spent Fuel Storage Installation (ISFSI) licensee'' instead of ''responsibility of each applicant for a site license.'' The commenter commented that the reference to an ''applicant for a site license'' is contrary to the SER introduction which states that the cask may be used by an ISFSI general licensee under 10 CFR Part 72. An ISFSI general licensee would be required to have site-specific evaluations in accordance with 10 CFR 72.212 but would not be required to apply for a site license. Further, an ISFSI licensee would be responsible for compliance with 10 CFR 72.104(a) at all times, not just during an application for a license.

Response: The NRC agrees. The SER has been revised accordingly.

Comment I–18: Three commenters requested that the first paragraph of Section 8.2 of the SER be revised to refer to CoC Appendix A, Section A 5.6 for the transport evaluation program, not Section A 5.5.

Response: The NRC agrees with the proposed clarification of the SER, that has been revised accordingly.

Comment I–19: Two commenters expressed concerns about the implications of long-term storage of spent nuclear fuel. One of the commenters had an acute interest in NRC's evaluation of this application because of Maine Yankee's intended use of this system for long-term storage following decommissioning. The commenters expected that the DOE will not remove all the spent nuclear fuel for 20 years or longer after plants cease operations and stated that whatever storage system is chosen must ensure the public's health and safety for an extended period and must ensure that the fuel will be acceptable for removal when the DOE is prepared to take it years in the future. One commenter commented that because spent fuel with pinholes or hairline cracks may deteriorate during storage, the NRC's evaluation of the NAC–UMS system does not provide the necessary assurance that the spent fuel will be acceptable to the DOE for permanent disposal.

Response: The NRC agrees with and shares the commenters' concerns regarding the safe storage of spent nuclear fuel for any and all lengths of time.

The NRC's cask certification regulations stipulate that the user's general license to store spent fuel in a particular cask design terminates 20 years after the cask design's first use by that licensee. If the CoC has been renewed, the general license expires 20 years after the CoC's renewal date. The NRC will review spent fuel storage cask designs periodically to consider any new information, either generic to spent fuel storage or specific to cask designs, that may have arisen since issuance of the cask's CoC. The 20-year time limitation expressly provides an opportunity for the NRC to address any and all safe storage implications associated with storing spent fuel, including spent fuel whose cladding has pinhole leaks or hairline cracks, in particular casks for longer than 20 years. The NRC's initial and recertification reviews of cask designs are independent of the DOE's capabilities to accept spent fuel for permanent disposal at any point in time. However, the NRC's initial and renewal evaluations of a cask design have and will consider both the public health and safety and the retrievability of the spent fuel contents.

Regarding the DOE's acceptance of spent fuel for permanent disposal in the future and the impact of storing spent fuel cladding with pinholes or hairline cracks, Dr. Ivan Itkin, Director of the Office of Civilian Radioactive Waste Management, addressed that issue for the Maine Yankee reactor. Dr. Itkin confirmed in a letter to Maine's Governor Angus S. King dated May 3, 2000 that DOE's contract for disposal with Maine Yankee covers the acceptance, transport, and disposal of all spent nuclear fuel from the Maine Yankee reactor, regardless of the condition of the spent fuel. Dr. Itkin further noted that, although the DOE may be currently delayed in its ability to begin the disposal of the Nation's commercial spent nuclear fuel, DOE has every intention of fulfilling its contractual obligations to all of its utility customers.

Comment I–20: Two commenters requested that as a prerequisite to approving the proposed rule, the NRC acquire binding assurances from the DOE that the DOE will accept spent fuel for transport and disposal that has been stored in accordance with NRC-approved procedures. Those procedures must ensure that stored spent fuel will remain in a condition the DOE can accept. The commenters stated that these considerations and 10 CFR 72.236 preclude approval of the proposed certification until the NRC and the applicant have thoroughly analyzed and resolved critical outstanding issues.

Response: The NRC disagrees that 10 CFR 72.236 requires the NRC to obtain binding assurances from the DOE regarding the acceptance of spent fuel for disposal prior to approving a storage cask design.

DOE's efforts to develop a multi-purpose canister (MPC) program gave rise to several recent dual purpose (storage and transportation) cask design applications, including the NAC–UMS. With dual purpose designs, fuel no longer must be returned to the reactor spent fuel pool for repackaging. Dual purpose cask designs have the capability of being prepared for offsite transportation without having to handle individual fuel assemblies or return to a spent fuel pool. DOE is continuing to develop the cask design characteristics and parameters for disposal.

Regarding the DOE's acceptance of spent fuel for permanent disposal in the future, Dr. Ivan Itkin, Director of the Office of Civilian Radioactive Waste Management, recently addressed that issue for the case of Maine Yankee reactor. Dr. Itkin confirmed in a letter to Maine's Governor Angus S. King dated May 3, 2000, that DOE's contract for disposal with Maine Yankee covers the acceptance, transport, and disposal of all spent nuclear fuel from the Maine Yankee reactor, regardless of the condition of the spent fuel. Dr. Itkin further noted that, although the DOE may be currently delayed in its ability to begin the disposal of the Nation's commercial spent nuclear fuel, DOE has every intention of fulfilling its contractual obligations to all of its utility customers. Because the DOE's spent fuel acceptance criteria for ultimate disposal has not yet been formalized, it would be not be practical to preclude a storage approval on this basis at this time.

Comment I–21: Two commenters stated that the PSER does not address the necessary financial capability of a license holder to operate and maintain the NAC–UMS cask storage system over the 20-year license period.

Response: This comment is beyond the scope of this rule. The financial capabilities of a certified cask design's user, a general licensee, are not required to be addressed in an application under 10 CFR Part 72, Subpart L. The NRC published a proposed rule in the **Federal Register** on November 3, 1999 (64 FRN 59677) that would clarify the portions of 10 CFR Part 72 that apply to activities associated with the general license, a specific license, and a CoC. Requirements regarding the financial capabilities of a cask user are not identified as being applicable to activities associated with obtaining a CoC in the proposed rule.

Comment I–22: Two commenters stated that the PSER does not address the necessary technical capability of the license holder to operate and maintain the NAC–UMS cask storage system.

Response: This comment is beyond the scope of this rulemaking. Requirements on the technical capabilities of a general licensee are principally contained in §§ 72.210 and 72.212. This rulemaking addressed question on the adequacy of the NAC–UMS cask design and changes to § 72.214. Therefore, the preliminary SER was not required to address questions on the adequacy of a general licensee who may wish to use the NAC–UMS cask design. The NRC's requirements on the adequacy of a cask design are contained in Subpart L of Part 72. These requirements apply to an applicant for a CoC and a certificate holder, not a general licensee. The NRC recently added a new section (§ 72.13) to Part 72 in a final rule to clarify which requirements apply to a specific licensee, a general licensee, or a certificate holder (see 65 FR 50606; August 21, 2000). Section 72.13 specifies that requirements for the qualification of a spent fuel storage cask design do not apply to a general licensee. Rather, they apply to the certificate holder (and applicant for a CoC).

Comment I–23: One commenter preferred that sensitivity studies for the canister deceleration g-loads and the tipover analysis be done by an independent party, not by NAC, and that sensitivity checks should be done by independent evaluation.

Response: The SAR sensitivity analyses examine how the structural performance, including impact decelerations of the NAC–UMS system, varies with changes of modeling parameter values for the 24-inch vertical drop and tip-over accidents. These analyses follow standard engineering practice for evaluating applicability of analytical modeling and results. In evaluating the SAR analyses, the NRC determined that the analyses were adequate. Therefore, additional independent evaluation is not warranted.

Comment I–24: One commenter expressed concern about long-term cask materials performance issues such as lead slumping and thermal aging, specifically as reactions that could cause creation of new materials and new interactions between the newly formed materials.

Response: As part of any storage cask application review, the NRC evaluates the long term materials issues, such as thermal aging and lead slumping. The maximum calculated temperatures of the various cask materials do not exceed the temperature limits for any conditions of storage. Therefore, the NRC is assured from the analyses provided in SAR Chapter 4 that the thermal load from the spent fuel will not adversely impact the ability of those materials to perform their intended functions during storage. Further, lead slumping would only be a concern for the lead in the annulus of the transfer cask while the TSC is contained inside (i.e., during transfer of the fuel from the spent fuel pool to the VCC). When the transfer cask is not being used, the lead is assumed to be at ambient temperatures. As noted in SER Section 3.1.4.2, no softening or flow of lead is expected in the annulus due to lead slumping.

Comment I–25: One commenter stated that Charpy testing of materials needs to be verified before any casks are loaded. The commenter asked who verifies the Charpy test of materials, where is the verification in the documents, and is the information clear.

Response: In general, some steel materials require minimum Charpy impact properties for structural applications as required by the governing consensus standard or codes (*e.g.,* ASTM, ASME Boiler and Pressure Vessel Code, etc.). The NAC–UMS storage cask utilizes several types of steel including stainless and carbon steel. The PWR support disks are fabricated with ASME SA–693, Type 630 (H1150) precipitation-hardened steel. A typical minimum impact absorption energy requirement for Type 630 stainless steel is 48 foot-pounds at −110 °F. Therefore, for the NAC–UMS storage cask, there is enough ductility in the material so that fracture of the material is not expected at the minimum specified service temperature of −40 °F. The BWR support disks are fabricated from ASME SA–533, Type B, carbon steel. As noted in SER Section 3.1.4.1, the applicant has committed to specifying Charpy impact testing for each plate of material in accordance with ASME Code Section III, Subsection NG–2320. With regard to testing the Charpy impact energy, it is the responsibility of the supplier of the material to perform the necessary tests in accordance with the purchase order and to document the results of those tests on the Certified Materials Test Record that accompanies each lot of material shipped to a customer. For the NAC–UMS cask, documentation for the materials used to fabricate a cask will be controlled in accordance with a quality

control program that conforms to the requirements of 10 CFR part 72, Subpart G.

Comment I–26: One commenter asked if ferritic steel is different than carbon steel. The commenter asked if the ferritic steel anchor base plate and optional lifting anchors should be stainless steel.

Response: Ferritic steel is one of several classifications of stainless steel. In general, stainless steels are more resistant to rusting than plain-carbon and low-alloy steels. Stainless steels also have superior corrosion resistance because they contain relatively large amounts of alloying elements (*e.g.,* chromium). Carbon steels, also known as plain carbon steels, have no minimum quantity for any alloying elements and contain only a small amount of elements other than the commonly accepted carbon, silicon, manganese, copper, sulfur, and phosphorus. Carbon steels are generally much less corrosion resistant than stainless steels.

The use of the ASTM A537, Class 2, carbon steel for the VCC lifting lug and its anchor plate is NAC's choice for meeting its design objectives. SAR Subsection 3.4.3.1.3 evaluates the lifting lug and its anchor plate, that has been reviewed and determined structurally adequate in SER Subsection 3.2.3.4.

Comment I–27: One commenter asked what the word ''chemical'' means in the term ''interlocking chemical lead bricks'' in Section 3.1.4.2 of the SER and what are the chemicals. The commenter also asked what could the chemicals create if water leaked into the lead chamber.

Response: Interlocking chemical lead bricks are used in the transfer cask for gamma shielding. There are no chemicals added to the lead. The term ''chemical'' refers to a grade of lead that is specified in the ASTM Standard B29 for lead materials. The grade specified as ''Chemical-Copper Lead'' is almost identical to the ''Pure Lead'' grade. Chemical-copper lead has 99.90% elemental lead (versus 99.94% elemental lead for the Pure Lead grade) and has 0.04% more alloying elements (*e.g.,* copper) than Pure Lead. Because the lead is encased between the inner and outer shells and the top and bottom end plates of the transfer cask, the lead is not expected to come in contact or react with the spent fuel pool water.

Comment I–28: One commenter asked several questions about the NS-4-FR shielding material including: what other cask systems use NS-4-FR; how long has NS-4-FR been in use; what does the word ''reliably'' mean as used in SER Section 3.1.4.2; how has the NS-4-FR been tested for fire resistance; what can happen if the NS-4-FR gets wet because of a transfer cask leak; where NS-4-FR has been tested to prove it will work well in long term dry cask storage; and if the NRC has checked the materials sheets from the manufacturer of NS-4-FR for the specifications.

Response: NS-4-FR has been used as a neutron shield in two licensed storage casks in the United States for up to 10 years and in more than 50 licensed casks in Japan, Spain and the United Kingdom. Various research groups have performed both radiation and thermal stability testing over the last 15 years. Data from these tests adequately demonstrate long-term thermal and radiation stability. Further, the NRC has not received any reports that the shielding effectiveness of the NS-4-FR material has become degraded. Therefore, the NRC staff believes that this material is reliable for the purpose of shielding neutrons from personnel and the environment.

The NS-4–FR material consists of many elements including hydrogen. The chemistry of the material (*e.g.,* the way the elements are bonded to one another) contribute significantly to the fire retardant capability of the NS-4-FR. Even though the material contains hydrogen, the ingredients were selected so the NS-4-FR resists fire and the generation of hydrogen gas that could cause the material to combust. Data supplied by the applicant show that approximately 90% of the gases that evolve from the NS-4-FR material when it is exposed to relatively high temperatures consists of water.

The neutron shields in the transfer cask and the VCC shield plug are enclosed in welded steel shells so water and direct flames from a fire cannot get in contact with the NS-4-FR. If water were to contact NS-4-FR, the material is inert. Therefore, gases will not form due to contact between the NS-4-FR and water. Further, if fire were to contact the shield material, data show that the material only becomes charred on the surface and rapid extinguishing of the flame after the source of the flame is removed.

Thermal and radiation testing of the NS-4-FR material was conducted in the United States by Bisco Products, Inc. and by several Japanese organizations to assess the material's long term performance under dry cask storage conditions. As part of the SAR review, the NRC staff routinely checks any manufacturer specification sheets to ensure that the material is being used in accordance with manufacturer's recommendations.

Comment I–29: One commenter asked if Keeler & Long and Carboline epoxy enamel paint has been checked for use on casks in actual situations. The commenter also asked whether paint patch-up jobs exacerbate corrosion.

Response: The Keeler & Long E-Series Epoxy and Carboline 890 paint coatings that are used to coat the exposed surfaces of the transfer cask are routinely recommended by the paint manufacturers for use in nuclear power plant applications. Further, these particular paint coatings have been used extensively under radiation and spent fuel pool water immersion conditions. Therefore, the NRC staff agrees with the applicant's statements in SAR Section 3.4.1.2.4 that there will be no adverse effects from contact between either of the paint coatings and spent fuel pool water because the paint will be applied in accordance with the paint manufacturer's recommendations. With regard to repainting areas where the coating has been removed (*e.g.,* by scratching), paint patching will be done in accordance with the paint manufacturer's recommendations and the transfer cask maintenance program described in SAR Chapter 9, and is specifically performed to not exacerbate corrosion.

Comment I–30: One commenter asked what is the date of ASME Code Section III, Part D, referenced in Section 3.1.4.6 of the SER. The commenter also asked what are the other acceptable references and their dates, and that the references be included in the SER.

Response: The 1995 Edition of the ASME Boiler and Pressure Vessel Code (B&PVC), Section II, Part D, is referenced in Section 3.1.4.6 of the SER. Other acceptable sources of information are referenced in SAR Section 3.2 and include: the 4th Editions of the Metallic Materials Specification Handbook, 1992; Military handbook MIL–HDBK–5G, U.S. Department of Defense, 1994; ASME B&PVC Code Cases—Nuclear Components, 1995 Edition, Code Case NC–71–17; and the Genden Engineering Services & Construction NS–4–FR Product Data Sheet.

Comment I–31: One commenter stated that the dry spent fuel loading and unloading referenced in Evaluation Finding F3.9 should not be in the SER unless it has been evaluated. The commenter asked what dry loading procedures are being referenced.

Response: The SAR procedures only address wet loading and unloading fuel from the NAC–UMS storage cask. Dry loading or unloading procedures are not included with this application and were not a part of the NRC's review. The SER finding was modified to indicate that

the materials are compatible with wet loading and unloading operations and facilities.

Summary of Final Revisions

Based on the responses above, the NRC has modified the CoC, the TSs and the SER as follows:

- LCO 3.2.2 has been revised (Comment B–7).
- TS A 3.1.7, ''Fuel Cooldown Requirements'' associated with canister unloading procedures has been deleted from the TS (Comment C–2).
- Parameters provided in B 3.4(6) of the ''Approved Contents and Design Features'' in Appendix B of CoC 1015 have been removed from the TS. This same set of site concrete pad and soil parameters is relevant to the tip-over analysis are being summarized in SAR Subsection 11.2.12 (Comment C–17).
- Section B 2.1.2 of the ''Approved Contents and Design Features'' has been edited (Comment D–4).
- B 2.2.3 of the ''Approved Contents and Design Features'' has been revised (Comment D–9).
- Tables B2–2 and B2–3 of the ''Approved Contents and Design Features'' have been revised. (Comment D–10).
- B 3.5.2.1 (4) of the Approved Contents and Design Features has been revised (Comment D–12).
- Table B3–2 of the Approved Contents and Design Features has been revised (Comment D–13).
- SER Subsection 3.1.1.3 has been revised (Comment F–4).
- SAR Drawing 790–584 has been revised to permit the use of ASME SA182 as an alternate to SA240 for both the shield and structural lids of the TSC (Comment F–5).
- The second frequency of surveillance requirement (SR) 3.1.1.1 and SR 3.1.1.2 within LCO 3.1.1 has been revised (Comment G–3).
- SR 3.1.6.2 has been deleted (Comment G–4).
- LCO 3.1.5 (Canister Helium Leak Rate) has been revised (Comment H–4).
- Section A 5.2 [after A 5.2 (n)]of the TS has been revised (Comment H–6).
- Table A5–1 of the TS has been revised (Comment H–7).
- The SAR title on the CoC has been revised (Comment I–1).
- Section 1.b (page 2 of 4, last paragraph) of the CoC has been revised (Comment I–15).
- SER 5.4.3 has been revised (Comment I–17).
- Section 8.2 of the SER been revised to refer to CoC Appendix A, Section A 5.6 for the transport evaluation program, while the Section A 5.5 reference to the transport evaluation program has been deleted (Comment I–18).
- SER Evaluation Finding F3.9 has been revised (Comment I–31).

Agreement State Compatibility

Under the ''Policy Statement on Adequacy and Compatibility of Agreement State Programs'' approved by the NRC on June 30, 1997, and published in the **Federal Register** on September 3, 1997 (62 FR 46517), this rule is classified as compatibility Category ''NRC.'' Compatibility is not required for Category ''NRC'' regulations. The NRC program elements in this category are those that relate directly to areas of regulation reserved to the NRC by the Atomic Energy Act of 1954, as amended (AEA), or the provisions of Title 10 of the Code of Federal Regulations. Although an Agreement State may not adopt program elements reserved to NRC, it may wish to inform its licensees of certain requirements via a mechanism that is consistent with the particular State's administrative procedure laws, but does not confer regulatory authority on the State.

Voluntary Consensus Standards

The National Technology Transfer Act of 1995 (Pub. L. 104–113) requires that Federal agencies use technical standards that are developed or adopted by voluntary consensus standards bodies unless the use of such a standard is inconsistent with applicable law or otherwise impractical. In this final rule, the NRC is adding the NAC–UMS cask system to the list of NRC-approved cask systems for spent fuel storage in 10 CFR 72.214. This action does not constitute the establishment of a standard that establishes generally-applicable requirements.

Finding of No Significant Environmental Impact: Availability

Under the National Environmental Policy Act of 1969, as amended, and the Commission's regulations in Subpart A of 10 CFR part 51, the NRC has determined that this rule is not a major Federal action significantly affecting the quality of the human environment and therefore, an environmental impact statement is not required. This final rule adds an additional cask to the list of approved spent fuel storage casks that power reactor licensees can use to store spent fuel at reactor sites without additional site-specific approvals from the NRC. The environmental assessment and finding of no significant impact on which this determination is based are available for inspection at the NRC Public Document Room, 11555 Rockville Pike, Rockville, MD and electronically at *http://ruleforum.llnl.gov.* Single copies of the environmental assessment and finding of no significant impact are available from Stan Turel, Office of Nuclear Material Safety and Safeguards, U.S. Nuclear Regulatory Commission, Washington, DC 20555, telephone (301) 415–6234, e-mail spt@nrc.gov.

Paperwork Reduction Act Statement

This final rule does not contain a new or amended information collection requirement subject to the Paperwork Reduction Act of 1995 (44 U.S.C. 3501 *et seq.*). Existing requirements were approved by the Office of Management and Budget, approval number 3150–0132.

Public Protection Notification

If a means used to impose an information collection does not display a currently valid OMB control number, the NRC may not conduct or sponsor, and a person is not required to respond to, the information collection.

Regulatory Analysis

On July 18, 1990 (55 FR 29181), the Commission issued an amendment to 10 CFR part 72. The amendment provided for the storage of spent nuclear fuel in cask systems with designs approved by the NRC under a general license. Any nuclear power reactor licensee can use cask systems with designs approved by the NRC to store spent nuclear fuel if it notifies the NRC in advance, the spent fuel is stored under the conditions specified in the cask's CoC, and the conditions of the general license are met. In that rule, four spent fuel storage casks were approved for use at reactor sites and were listed in 10 CFR 72.214. That rule envisioned that storage casks certified in the future could be routinely added to the listing in 10 CFR 72.214 through the rulemaking process. Procedures and criteria for obtaining NRC approval of new spent fuel storage cask designs were provided in 10 CFR Part 72, Subpart L.

The alternative to this action is to withhold approval of this new design and issue a site-specific license to each utility that proposes to use the casks. This alternative would cost both the NRC and utilities more time and money for each site-specific license. Conducting site-specific reviews would ignore the procedures and criteria currently in place for the addition of new cask designs that can be used under a general license, and would be in conflict with Nuclear Waste Policy Act (NWPA) direction to the Commission to approve technologies for the use of spent fuel storage at the sites of civilian nuclear power reactors without, to the

maximum extent practicable, the need for additional site reviews. This alternative also would tend to exclude new vendors from the business market without cause and would arbitrarily limit the choice of cask designs available to power reactor licensees. This final rule will eliminate the above problems and is consistent with previous NRC actions. Further, the rule will have no adverse effect on public health and safety.

The benefit of this rule to nuclear power reactor licensees is to make available a greater choice of spent fuel storage cask designs that can be used under a general license. The new cask vendors with casks to be listed in 10 CFR 72.214 benefit by having to obtain NRC certificates only once for a design that can then be used by more than one power reactor licensee. The NRC also benefits because it will need to certify a cask design only once for use by multiple licensees. Casks approved through rulemaking are to be suitable for use under a range of environmental conditions sufficiently broad to encompass multiple nuclear power plants in the United States without the need for further site-specific approval by NRC. Vendors with cask designs already listed may be adversely impacted because power reactor licensees may choose a newly listed design over an existing one. However, the NRC is required by its regulations and NWPA direction to certify and list approved casks. This rule has no significant identifiable impact or benefit on other Government agencies.

Based on the above discussion of the benefits and impacts of the alternatives, the NRC concludes that the requirements of the final rule are commensurate with the Commission's responsibilities for public health and safety and the common defense and security. No other available alternative is believed to be as satisfactory, and thus, this action is recommended.

Regulatory Flexibility Certification

In accordance with the Regulatory Flexibility Act of 1980 (5 U.S.C. 605(b)), the NRC certifies that this rule will not, if promulgated, have a significant economic impact on a substantial number of small entities. This rule affects only the licensing and operation of nuclear power plants, independent spent fuel storage facilities, and NAC. The companies that own these plants do not fall within the scope of the definition of ''small entities'' set forth in the Regulatory Flexibility Act or the Small Business Size Standards set out in regulations issued by the Small Business Administration at 13 CFR part 121.

Backfit Analysis

The NRC has determined that the backfit rule (10 CFR 50.109 or 10 CFR 72.62) does not apply to this rule because this amendment does not involve any provisions that would impose backfits as defined in the backfit rule. Therefore, a backfit analysis is not required.

Small Business Regulatory Enforcement Fairness Act

In accordance with the Small Business Regulatory Enforcement Fairness Act of 1996, the NRC has determined that this action is not a major rule and has verified this determination with the Office of Information and Regulatory Affairs, Office of Management and Budget.

List of Subjects in 10 CFR Part 72

Criminal penalties, Manpower training programs, Nuclear materials, Occupational safety and health, Reporting and recordkeeping requirements, Security measures, Spent fuel.

For the reasons set out in the preamble and under the authority of the Atomic Energy Act of 1954, as amended; the Energy Reorganization Act of 1974, as amended; and 5 U.S.C. 553; the NRC is proposing to adopt the following amendments to 10 CFR part 72.

PART 72—LICENSING REQUIREMENTS FOR THE INDEPENDENT STORAGE OF SPENT NUCLEAR FUEL AND HIGH–LEVEL RADIOACTIVE WASTE

1. The authority citation for Part 72 continues to read as follows:

Authority: Secs. 51, 53, 57, 62, 63, 65, 69, 81, 161, 182, 183, 184, 186, 187, 189, 68 Stat. 929, 930, 932, 933, 934, 935, 948, 953, 954, 955, as amended, sec. 234, 83 Stat. 444, as amended (42 U.S.C. 2071, 2073, 2077, 2092, 2093, 2095, 2099, 2111, 2201, 2232, 2233, 2234, 2236, 2237, 2238, 2282); sec. 274, Pub. L. 86–373, 73 Stat. 688, as amended (42 U.S.C. 2021); sec. 201, as amended, 202, 206, 88 Stat. 1242, as amended, 1244, 1246 (42 U.S.C. 5841, 5842, 5846); Pub. L. 95–601, sec. 10, 92 Stat. 2951 as amended by Pub. L. 10d—48b, sec. 7902, 10b Stat. 31b3 (42 U.S.C. 5851); sec. 102, Pub. L. 91–190, 83 Stat. 853 (42 U.S.C. 4332); secs. 131, 132, 133, 135, 137, 141, Pub. L. 97–425, 96 Stat. 2229, 2230, 2232, 2241, sec. 148, Pub. L. 100–203, 101 Stat. 1330–235 (42 U.S.C. 10151, 10152, 10153, 10155, 10157, 10161, 10168).

Section 72.44(g) also issued under secs. 142(b) and 148(c), (d), Pub. L. 100–203, 101 Stat. 1330–232, 1330–236 (42 U.S.C. 10162(b), 10168(c),(d)). Section 72.46 also issued under sec. 189, 68 Stat. 955 (42 U.S.C. 2239); sec. 134, Pub. L. 97–425, 96 Stat. 2230 (42 U.S.C. 10154). Section 72.96(d) also issued under sec. 145(g), Pub. L. 100–203, 101 Stat. 1330–235 (42 U.S.C. 10165(g)). Subpart J also issued under secs. 2(2), 2(15), 2(19), 117(a), 141(h), Pub. L. 97–425, 96 Stat. 2202, 2203, 2204, 2222, 2244, (42 U.S.C. 10101, 10137(a), 10161(h)). Subparts K and L are also issued under sec. 133, 98 Stat. 2230 (42 U.S.C. 10153) and sec. 218(a), 96 Stat. 2252 (42 U.S.C. 10198).

2. In § 72.214, CoC 1015 is added to read as follows:

§ 72.214 List of approved spent fuel storage casks.

* * * * *

Certificate Number: 1015.

SAR Submitted by: NAC International, Inc.

SAR Title: Final Safety Analysis Report for the NAC–UMS Universal Storage System.

Docket Number: 72–1015.

Certificate Expiration Date: November 20, 2020.

Model Number: NAC–UMS.

* * * * *

Dated at Rockville, Maryland, this 2nd day of October ,2000.

For the Nuclear Regulatory Commission.

William D. Travers,

Executive Director for Operations.

[FR Doc. 00–26888 Filed 10–18–00; 8:45 am]

BILLING CODE 7590–01–P

DEPARTMENT OF COMMERCE

Bureau of Export Administration

15 CFR Part 705

[Docket No. 000601164–0164–01]

RIN 0694–AC07

Effect of Imported Articles on the National Security

AGENCY: Bureau of Export Administration, Commerce.

ACTION: Final rule.

SUMMARY: The Department of Commerce is amending its regulation on the ''Effect of Imported Articles on the National Security'' to reduce the number of copies of a request or application for an investigation to be filed with the Department from 12 copies to 1 copy, plus the original, thereby reducing the burden on the applicant.

EFFECTIVE DATE: This rule is effective November 20, 2000.

FOR FURTHER INFORMATION CONTACT: Brad Botwin, Director, Strategic Analysis Division, Office of Strategic Industries and Economic Security, Room 3876,

U.S. Department of Commerce, 14th Street and Constitution Avenue, Washington, DC 20230; telephone: (202) 482–4060, FAX: (202) 482–5650, and E-Mail: bbotwin@bxa.doc.gov.

SUPPLEMENTARY INFORMATION:

Background

Section 232 of the Trade Expansion Act of 1962, as amended (19 U.S.C. 1862) (the Act) authorizes investigations to determine the effects on the national security of imports of articles which are the subject of a request or application for an investigation. The implementing regulation, ''Effect of Imported Articles on the National Security'' (15 CFR Part 705)), prescribes procedures to be followed by the Department of Commerce (the Department) to commence and conduct such investigations.

Consistent with amendments in 1995 to the Paperwork Reduction Act of 1980 to reduce the paperwork burden on persons submitting a request or application for an investigation, section 705.5 of this regulation is being amended to reduce the number of copies of a request or application for and investigation to be filed with the Department from 12 copies to 1 copy, plus the original.

Accordingly, section 705.5 of the regulation is revised to require that an original and 1 copy of a request or application for an investigation be filed with the Director, Office of Strategic Industries and Economic Security, Room 3876, U.S. Department of Commerce, Washington, DC 20230.

Rulemaking Requirements

The Department has made certain determinations with respect to the following rulemaking requirements:

1. This final rule has been determined to be not significant for purposes of Executive Order 12866.

2. Notwithstanding any other provision of law, no person is required to, nor shall a person be subject to a penalty for failure to comply with a collection of information, subject to the Paperwork Reduction Act (PRA), unless that collection of information displays a currently valid OMB Control Number. This rule involves collections of information subject to the Paperwork Reduction Act of 1995 (U.S.C. 3501 *et seq.*). This regulation involves collections previously approved by the Office of Management and Budget under Control Number 0694–0120, ''Procedure to Initiate an Investigation Under the Trade Expansion Act of 1962'', which carries a burden hour estimate of 12 hours per submission.

3. *Executive Order 13132:* This proposed rule does not contain policies with Federalism implications sufficient to warrant preparation of a Federalism assessment under E.O. 13132.

4. *Administrative Procedure Act and Regulatory Flexibility Act:* The provisions of the Administrative Procedure Act (5 U.S.C. 553) requiring notice of proposed rulemaking, the opportunity for public participation and a delay in effective date, are inapplicable because this regulation relates to agency procedures (Sec. 5 U.S.C. 553 (b)(A)). Further, no other law requires that a notice of proposed rulemaking and an opportunity for public comment be given for this rule. Because a notice of proposed rulemaking and an opportunity for public comment are not required to be given for this rule under 5 U.S.C. 553 or by any other law, the analytical requirements of the Regulatory Flexibility Act (5 U.S.C. 601 *et seq.*) are not applicable.

List of Subjects in 15 CFR Part 705

Administrative practice and procedure, Business and industry, Classified information, Confidential business information, Imports, Investigations, National Security.

For the reasons set forth in the preamble, part 705 of Chapter VIII, Subchapter A, National Security Industrial Base Regulations (15 CFR part 705) is amended as follows:

PART 705—[AMENDED]

1. The authority citation for Part 705 is revised to read as follows:

Authority: Sec 232, Trade Expansion Act of 1962, as amended (19 U.S.C. 1862)

2. Section 705.5 is amended by revising paragraph (a) to read as follows:

§ 705.5 Request or application for an investigation.

(a) A request or application for an investigation shall be in writing. The original and 1 copy shall be filed with the Director, Office of Strategic Industries and Economic Security, Room 3876, U.S. Department of Commerce, Washington, DC 20230.

* * * * *

Dated: October 11, 2000.

R. Roger Majak,

Assistant Secretary for Export Administration.

[FR Doc. 00–26780 Filed 10–18–00; 8:45 am]

BILLING CODE 3810–JT–P

DEPARTMENT OF COMMERCE

Bureau of Export Administration

15 CFR Parts 732, 734, 740, 742, 744, 748, 770, 772 and 774

[Docket No. 001006282–0282–01]

RIN 0694–AC32

Revisions to Encryption Items

AGENCY: Bureau of Export Administration, Commerce.

ACTION: Final rule.

SUMMARY: This rule amends the Export Administration Regulations (EAR) and implements the July 17 White House announcement to streamline the export and reexport of encryption items to European Union (EU) member states, Australia, Czech Republic, Hungary, Japan, New Zealand, Norway, Poland and Switzerland under License Exception ENC. The 30-day waiting period and the previous distinction between government and non-government end-users are removed by this rule for these destinations. This rule makes further revisions and clarifications to the rule published on January 14, 2000 including changes in the treatment of products incorporating short-range wireless technologies, open cryptographic interfaces, beta test software, encryption source code, and U.S. content (*de minimis*) requirements. This rule also allows, for the first time, exporters to self-classify unilateral controlled encryption products (that fall under Export Control Classification Numbers (ECCNs) 5A992, 5D992 and 5E992) upon notification to the Bureau of Export Administration (BXA). Restrictions on exports by U.S. persons to terrorist-supporting states (Cuba, Iran, Iraq, Libya, North Korea, Sudan or Syria), their nationals and other sanctioned entities are not changed by this rule.

DATES: This rule is effective October 19, 2000.

FOR FURTHER INFORMATION CONTACT: James A. Lewis, Director, Office of Strategic Trade, at (202) 482–4196.

SUPPLEMENTARY INFORMATION:

Background

On July 17, 2000, the United States announced further updates to its encryption export policy coinciding with the recent regulations adopted by the European Union which ease exports among 23 countries. This action is consistent with the Administration's decision to ensure that U.S. companies are not disadvantaged by such changes and will be able to compete effectively

in these markets. Post-export reports were examined and action taken for the requirements to more accurately reflect companies' business models. The rule further streamlines reexport controls by considering certain components and software for *de minimis* treatment. The review of *de minimis* eligibility will take into account national security interests. These steps continue to serve the full range of national interests: promote electronic commerce, support law enforcement and national security and protect privacy.

Specifically, this rule amends the EAR in the following ways:

1. In § 732.2 (Steps Regarding Scope of the EAR) conforming changes are made with respect to *de minimis* consideration for encryption items controlled under ECCNs 5A002 and 5D002, as described in paragraph (2) below.

2. In § 734.4 (*De Minimis* U.S. Content), software controlled under ECCN 5D002 eligible for export under the ''retail'' or ''source code'' provisions of license exception ENC and parts and components controlled under ECCN 5A002 may be made eligible for *de minimis* treatment after review and classification by BXA. As a result of this change, certain U.S. origin encryption items, incorporated into foreign products, which were previously prohibited from *de minimis* consideration, may now be made eligible in a process similar to that used now for retail determinations. Examples include retail operating systems and desktop applications (e.g. e-mail, browsers, games, word processing, database, financial applications or utilities) designed for, bundled with, or pre-loaded on single CPU computers, laptops, hand-held devices, or components or software designed for use in retail communication devices (e.g. wireless devices or smart cards), or decontrolled products. Exporters applying for *de minimis* eligibility must explain why the part or component would qualify for *de minimis* treatment in the support documents included with the classification request. *De minimis* eligibility continues to apply to encryption items controlled under ECCNs 5A992, 5D992 and 5E992.

3. § 740.9 (Temporary imports, exports and reexports (TMP)), now includes encryption software controlled for EI reasons under ECCN 5D002 to be allowed under the beta test provisions of License Exception TMP. The exporter must provide BXA the information described in Supplement 6 to Part 742 by the time of export. Exporters should note that any final resulting product will require review and classification under the provisions of § 740.17. Names and addresses of the testers, except individual consumers, and the name and version of the beta software are to be reported every six months consistent with § 740.17(e)(5). Encryption software controlled under ECCN 5D992 is eligible for this beta test provision.

4. § 740.13 (Technology and Software Unrestricted (TSU)) clarifies the treatment of open source object code. Object code compiled from source code eligible for License Exception TSU can also be exported under the provisions of License Exception TSU if the requirements of § 740.13 are met and no fee or payment is required for object code (other than reasonable and customary fees for reproduction and distribution). Object code for which there is a fee or payment can be exported under the provisions of 740.17(b)(4)(i). The intent of this section is to release publicly available software available without charge (e.g. ''freeware'') from control. Also in § 740.13, crypt@bxa.doc.gov address is added to prompt exporters to notify BXA electronically. Exporters should note the intent of the phrase ''released from EI controls'' in 740.13(e) means that 5D002 software eligible for TSU is released from the mandatory access controls procedures described in 734.2(b)(9)(ii).

5. In § 740.17 (Encryption Commodities and Software (ENC)), language is added to further streamline the export and reexport of encryption items under License Exception ENC and to parallel the changes adopted by the EU. Please note that the paragraph numbering was changed in this section to simplify the structure and provide for more changes to License Exception ENC. License Exception ENC (Encryption Commodities and Software) is revised as follows:

a. § 740.17 begins with an introductory paragraph describing the commodity and country scope of License Exception ENC.

b. § 740.17(a) adds a provision to allow all encryption items, except for ''cryptanalytic products,'' as specified in ECCN 5A002.a.2 and the software and technology relating to these cryptanalytic commodities (defined in part 772), to be exported to EU member states, Australia, Czech Republic, Hungary, Japan, New Zealand, Norway, Poland and Switzerland (listed in Supplement 3 to Part 740), under License Exception ENC provided the exporter has submitted to BXA a completed classification request by the time of export. Exports and reexports to foreign subsidiaries or offices of firms, organizations and governments headquartered in Canada or in the above-listed countries for internal use are also eligible under this provision.

c. § 740.17(b) adds an introductory paragraph for the provisions set out under License Exception ENC for exports to countries outside of those listed in Supplement 3 to part 740, as well as for exports and reexports of items which provide an open cryptographic interface.

d. § 740.17(b)(1) (Encryption Items to U.S. Subsidiaries) is revised to clarify that foreign nationals, who may not be permanent employees (contractors, interns, etc.) working for U.S. companies are eligible to receive technology controlled under ECCN 5E002 in the United States under License Exception ENC. Note that all encryption items produced or developed by U.S. subsidiaries continue to be subject to the EAR and require review and classification before any sale or retransfer outside of the U.S. company.

e. In § 740.17(b)(2)(i) (Encryption Commodities and Software), any encryption commodity, general purpose toolkit, software and component is authorized for export or reexport, after review and classification by BXA under ECCNs 5A002 and 5D002, to any individual, commercial firm or other non-government end-user located outside the countries listed in Supplement 3 to Part 740 under License Exception ENC. Exporters should note that a license is still required for exports to government end-users in these destinations. In addition, to further streamline License Exception ENC, the provisions for general purpose toolkits is moved from paragraph (a)(5) to this paragraph (b)(2)(i).

f. In § 740.17(b)(2)(ii) (Encryption Commodities and Software), to simplify the regulation, the paragraph on Internet or telecommunications service providers was deleted and the part relating to products not classified as retail was moved to this paragraph. Note that Internet and telecommunications service providers may now provide services to the governments of the countries listed in Supplement 3 to Part 740 under License Exception ENC. Such exports previously required a license under former paragraph (a)(4). Exporters should note that a license is still required for exports to government end-users located in other destinations.

g. In § 740.17(b)(3) (Retail Encryption Commodities and Software), License Exception ENC is revised to authorize, without prior review and classification or reporting, those items which are controlled only because they incorporate components providing

encryption functionality which is limited to short-range wireless encryption, such as those based on the Bluetooth and Home Radio Frequency (HomeRF) specifications. Examples of such products include audio devices, cameras and videos, computer accessories, handheld devices, mobile phones and consumer appliances (*e.g.*, refrigerators, microwaves and washing machines). The part of the Internet or telecommunications service providers paragraph relating to obtaining retail products under License Exception ENC and using them to provide service to any entity is moved to this paragraph. As a result of this revision, former paragraph (a)(4) (Internet and Telecommunications Service Providers) is removed.

h. Additional changes are made under § 740.17(b)(3). In paragraph (i)(C), a clarification is made to allow the retail provisions to include anticipated sales by changing the phrase ''sold in large volume'' to ''which are sold or will be sold in large volume.'' To further streamline the encryption controls, exporters may now export and reexport finance-specific encryption products and 56-bit products (with key exchange mechanisms greater than 512 bits and up to and including 1024 bits) immediately after submitting a completed classification request to BXA. As a result, the former paragraphs (a)(3)(vi) and (vii), which relate to these items, are combined into one paragraph.

i. § 740.17(b)(4) (Commercial encryption source code) is revised to clarify that object code resulting from the compiling of source code which would be considered publicly available and eligible for export under License Exception ENC or TSU can also be exported or reexported under ENC if the requirements of § 740.17(b)(4)(i) are otherwise met. Commercial encryption source code which would not be considered publicly available may now be exported or reexported using License Exception ENC to any non-government end-user immediately after submitting a completed classification request. Requirements for source code containing an open cryptographic interface are addressed separately in paragraph (b)(5). For the purpose of streamlining the provisions of License Exception ENC, references to general purpose toolkits are removed and are now addressed in § 740.17(b)(2) and (c).

j. § 740.17(b)(5) (Cryptographic interfaces) is added to authorize the export and reexport of encryption commodities, software and components which provide an open cryptographic interface to any end-user located in the countries listed in Supplement 3 to Part 740 under License Exception ENC. Exports and reexports to other destinations continue to require a license except to subsidiaries of a U.S. company for their internal use. This paragraph also permits encryption products that enable foreign developed products to operate with U.S. products (e.g. digitally signing) to be exported or reexported to any eligible end-user. The foreign ''enabled'' product is not subject to review, however, and limited reporting is required as specified in § 740.17(e)(3).

k. § 740.17(c) (Reexports and Transfers) is added by combining the transfer provisions of paragraph (c) with former paragraph (d) relating to exports and reexports of foreign products incorporating U.S. encryption source code, components or general purpose encryption toolkits, former paragraph (h) relating to distributors and resellers, and the related provisions of former paragraph (b)(5)(iv).

l. In § 740.17(d),(Eligibility for License Exception ENC), conforming changes are made to review and classification requirements and grandfathering provisions to take into account the new policy that allows most exports of encryption to the countries listed in Supplement 3 to Part 740.

m. In § 740.17(e) (Reporting requirements), new paragraphs are added to eliminate reporting requirements for consumer products incorporating short-range wireless encryption, client Internet appliance and client wireless LAN cards, and for retail operating systems or desktop applications (e.g., browsers, e-mail, word processing, database, games, financial applications or utilities) designed for, bundled with, or preloaded on single CPU computers , laptops or handheld devices. In addition, a new paragraph is added to eliminate reporting requirements for foreign products developed by bundling or compiling of source code. This rule clarifies that exporters must report only exports to subsidiaries of U.S. companies when the U.S. subsidiary is reselling or distributing the product. The reporting obligation is consistent with the provisions for distributors or resellers. Lastly, since exporters may now export technology to the countries listed in Supplement 3 to Part 740 under License Exception ENC, the semi-annual reports require the name and address of the manufacturer using the technology when intended for use in foreign products developed for commercial sale and a non-proprietary technical description of what is being developed using that technology. For further streamlining, the requirement of reporting exports to Internet and telecommunication service providers immediately is removed. These exports are now reported consistent with the semi-annual time frames.

n. Remaining reporting requirements are streamlined to reflect business models normally used by exporters. Note that reporting for exports and reexports of encryption components can be adjusted or reduced, on a case-by-case basis, provided an exporter supplies BXA with sufficient information during the initial technical review of the U.S. encryption component concerning its incorporation in a final foreign product. Companies should request such adjustments or reductions from BXA to ensure that reporting requirements reflect their business model.

o. Supplement No. 3 to Part 740 is created to identify those countries which are now eligible for the expanded treatment under License Exception ENC based on the new policy.

6. § 742.15 (Encryption Items) revises the licensing policy for export and reexports of encryption items, as follows:

a. The license requirements section is streamlined.

b. Combines into one paragraph (1)(i) the former subparagraphs which individually described the eligibility for 56–bit encryption items, key management products and 64–bit mass market encryption commodities and software. In addition, adds a provision to allow exporters to self-classify these encryption items under ECCNs 5A992, 5D992, and 5E992. After submitting the information described in paragraphs (a) through (e) of Supplement 6 to part 742 to BXA, these encryption items may be exported and reexported as ''NLR'' (No License Required). This submission is not a classification and no response is required from BXA for shipment.

c. Removes the requirement that all products developed using U.S. encryption items are subject to the EAR. This clarifies that *de minimis* eligibility applies for encryption commodities controlled under ECCNs 5A992, 5D992 and 5E992. In addition, BXA may apply, on a case-by-case basis, the *de minimis* rule to foreign products incorporating 5A002 and 5D002 parts, components and software which are eligible for export under the ''retail'' or ''source code'' provisions of License Exception ENC.

d. Adds the provision that any end-user located in the countries listed in Supplement 3 to Part 740 is eligible to receive encryption items classified by BXA under ECCNs 5A002, 5D002 and 5E002. Exports and reexports to foreign

subsidiaries or offices of firms, organizations and governments headquartered in the above-listed countries are also eligible under this provision.

7. Supplement No. 6 to Part 742 is further streamlined to provide more detailed guidelines for submitting a classification request for encryption items.

8. § 744.9 is revised to expressly provide that the restrictions imposed by that section do not prohibit technical assistance abroad by U.S. persons in connection with the discussion of information in the work of groups or bodies engaged in standards development.

9. In § 748.3 (Classification and Advisory Opinions), is revised to clarify that exporters may self-classify 5A992, 5D992 and 5E992 items after submitting by the time of export the information described in paragraphs 1–5 of Supplement 6 to Part 742.

10. In § 770.2 (Interpretation 14), conforming changes are made to regulatory citations.

11. In Part 772 (Definition of Terms), the definition of ''cryptanalytic items'' is added.

12. In Part 774, ECCNs 5A002, 5A992, 5D992, and 5E992 are revised to clarify that items previously classified under 5A002, 5D002 and 5E002 continue to be controlled for AT1 reasons.

Licenses required for export or reexports to governments for network management products not classified as retail which do not allow for encryption of data by the network users may be considered favorably for civil end-uses.

For further clarity, this rule makes clear that the seven terrorist designated countries are not eligible under the provisions of License Exception ENC.

BXA received a number of comments on the January 14 regulation (65 FR 2492). These comments all reflected certain common themes: that the regulation was too complex; that the United States needed to match any EU action; that reporting should be reduced or eliminated and that encryption items should be made eligible for *de minimis* treatment. These comments were carefully considered by the Interagency Working Group on Cryptography in the development of this regulation, and a number of the concerns are explicitly addressed by this regulation. Section 740.17 (License Exception ENC) has been shortened and simplified. It also implements a number of changes to streamline U.S. practice and bring it into line with EU licensing practice. Reporting requirements have been greatly reduced by the elimination of reporting required from foreign subsidiaries of U.S. firms and for software used on low level computers. Finally, this regulation institutes a process whereby certain retail encryption products can now be made eligible for *de minimis* treatment.

Although the Export Administration Act (EAA) expired on August 20, 1994, the President invoked the International Emergency Economic Powers Act and continued in effect the EAR, and, to the extent permitted by law, the provisions of the EAA in Executive Order 12924 of August 19, 1994, as extended by the President's notices of August 15, 1995 (60 FR 42767), August 14, 1996 (61 FR 42527), August 13, 1997 (62 FR 43629), August 13, 1998 (63 FR 44121), August 10, 1999 (64 F.R. 44101), and August 8, 2000 (65 FR 48347).

Rulemaking Requirements

1. This final rule has been determined to be significant for purposes of Executive Order 12866.

2. Notwithstanding any other provision of law, no person is required to respond to, nor shall any person be subject to a penalty for failure to comply with a collection of information, subject to the requirements of the Paperwork Reduction Act (PRA), unless that collection of information displays a currently valid OMB Control Number. This rule involves collections of information subject to the Paperwork Reduction Act of 1995 (44 U.S.C. 3501 *et seq.*). These collections have been approved by the Office of Management and Budget under control numbers 0694–0088, ''Multi-Purpose Application'' and 0694–0104, ''Commercial Encryption Items Transferred from the Department of State to the Department of Commerce.'' Collection 0694–0088 carries a burden hour estimate of 45 minutes per manual submission and 40 minutes per electronic submission. Miscellaneous and recordkeeping activities account for 12 minutes per submission. For collection 0694–0104, it is estimated it will take companies 5 minutes to complete notifications for source code under License Exceptions TSU and ENC. It will take companies 15 minutes to complete upgrade notifications. For reporting under License Exception ENC and licenses for encryption items, it will take companies 8 hours to complete semi-annual reporting requirements.

3. This rule does not contain policies with Federalism implications sufficient to warrant preparation of a Federalism assessment under Executive Order 13132.

4. The provisions of the Administrative Procedure Act (5 U.S.C. 553) requiring notice of proposed Rulemaking, the opportunity for public participation, and a delay in effective date, are inapplicable because this regulation involves a military and foreign affairs function of the United States (Sec. 5 U.S.C. 553(a)(1)). Further, no other law requires that a notice of proposed rulemaking and an opportunity for public comment be given for this final rule. Because a notice of proposed rulemaking and an opportunity for public comment are not required to be given for this rule under 5 U.S.C. 553, or by any other law, the analytical requirements of the Regulatory Flexibility Act (5 U.S.C. 601 *et seq.*) are not applicable. Therefore, this regulation is issued in final form. Although there is no formal comment period, public comments on this regulation are welcome on a continuing basis. Comments should be submitted to Kirsten Mortimer, Office of Exporter Services, Bureau of Export Administration, Department of Commerce, P.O. Box 273, Washington, D.C. 20044.

Copies of the public record concerning these regulations may be requested from: Bureau of Export Administration, Office of Administration, U.S. Department of Commerce, Room 6883, 14th and Constitution Avenue, NW, Washington, DC 20230; (202) 482–0637. This component does not maintain a separate public inspection facility. Requesters should first view BXA's website (which can be reached through *http://www.bxa.doc.gov*). If requesters cannot access BXA's website, please call the number above for assistance.

List of Subjects

15 CFR Parts 732, 740 and 748

Administrative practice and procedure, Exports, Foreign trade, Reporting and recordkeeping requirements.

15 CFR Part 734

Administrative practice and procedure, Exports, Foreign trade.

15 CFR Parts 742, 770, 772 and 774

Exports, Foreign trade.

15 CFR Part 744

Exports, Foreign trade, reporting and recordkeeping requirements.

Accordingly, parts 732, 734, 740, 742, 744, 748, 770, 772 and 774 of the Export Administration Regulations (15 CFR parts 730 through 799) are amended as follows:

1. The authority citation for parts 732, 748, 770, and 772 are revised to read as follows:

Authority: 50 U.S.C. app. 2401 *et seq.*; 50 U.S.C. 1701 *et seq.*; E.O. 12924, 59 FR 43437, 3 CFR, 1994 Comp., p. 917; E.O. 13026, 61 FR 58767, 3 CFR, 1996 Comp., p. 228; Notice of August 3, 2000 (65 FR 48347, August 8, 2000).

2. The authority citation for part 734 continues to read as follows:

Authority: 50 U.S.C. app. 2401 *et seq.*; 50 U.S.C. 1701 *et seq.*; E.O. 12924, 59 FR 43437, 3 CFR, 1994 Comp., p. 917; E.O. 12938, 59 FR 59099, 3 CFR, 1994 Comp., p. 950; E.O. 13020, 61 FR 54079, 3 CFR, 1996 Comp. p. 219; E.O. 13026, 61 FR 58767, 3 CFR, 1996 Comp., p. 228; Notice of November 12, 1998, 63 FR 63589, 3 CFR, 1998 Comp., p. 305; Notice of August 3, 2000 (65 FR 48347, August 8, 2000).

3. The authority citation for part 740 continues to read as follows:

Authority: 50 U.S.C. app. 2401 *et seq.*; 50 U.S.C. 1701 *et seq.*; E.O. 12924, 59 FR 43437, 3 CFR, 1994 Comp., p. 917; E.O. 13026, 61 FR 58767, 3 CFR, 1996 Comp., p. 228; Notice of August 3, 2000 (65 FR 48347, August 8, 2000).

4. The authority citation for part 742 continues to read as follows:

Authority: 50 U.S.C. app. 2401 *et seq.*; 50 U.S.C. 1701 *et seq.*; 18 U.S.C. 2510 *et seq.*; 22 U.S.C. 3201 *et seq.*; 42 U.S.C. 2139a; E.O. 12058, 43 FR 20947, 3 CFR, 1978 Comp., p. 179; E.O. 12851, 58 FR 33181, 3 CFR, 1993 Comp., p. 608; E.O. 12924, 59 FR 43437, 3 CFR, 1994 Comp., p. 917; E.O. 12938, 59 FR 59099, 3 CFR, 1994 Comp., p. 950; E.O. 13026, 61 FR 58767, 3 CFR, 1996 Comp., p. 228; Notice of November 12, 1998, 63 FR 63589, 3 CFR, 1998 Comp., p. 305; Notice of August 3, 2000 (65 FR 48347, August 8, 2000).

5. The authority citation for part 744 continues to read as follows:

Authority: 50 U.S.C. app. 2401 *et seq.*; 50 U.S.C. 1701 *et seq.*; 22 U.S.C. 3201 *et seq.*; 42 U.S.C. 2139a; E.O. 12058, 43 FR 20947, 3 CFR, 1978 Comp., p. 179; E.O. 12851, 58 FR 33181, 3 CFR, 1993 Comp., p. 608; E.O. 12924, 59 FR 43437, 3 CFR, 1994 Comp., p. 917; E.O. 12938, 59 FR 59099, 3 CFR, 1994 Comp., p. 950; E.O. 13026, 61 FR 58767, 3 CFR, 1996 Comp., p. 228; Notice of November 12, 1998, 63 FR 63589, 3 CFR, 1998 Comp., p. 305; Notice of August 3, 2000 (65 FR 48347, August 8, 2000).

6. The authority citation for part 774 continues to read as follows:

Authority: 50 U.S.C. app. 2401 *et seq.*; 50 U.S.C. 1701 *et seq.*; 10 U.S.C. 7420; 10 U.S.C. 7430(e); 18 U.S.C. 2510 *et seq.*; 22 U.S.C. 287c, 22 U.S.C. 3201 *et seq.*, 22 U.S.C. 6004; 30 U.S.C. 185(s), 185(u); 42 U.S.C. 2139a; 42 U.S.C. 6212; 43 U.S.C. 1354; 46 U.S.C. app. 466c; 50 U.S.C. app. 5; E.O. 12924, 59 FR 43437, 3 CFR, 1994 Comp., p. 917; E.O. 13026, 61 FR 58767, 3 CFR, 1996 Comp., p. 228; Notice of August 3, 2000 (65 FR 48347, August 8, 2000).

PART 732—[AMENDED]

7. Section 732.2 is amended by revising paragraph (d) introductory text to read as follows:

§ 732.2 Steps regarding scope of the EAR.

* * * * *

(d) *Step 4: Foreign-made items incorporating less than the* de minimis *level of U.S. parts, components, and materials.* This step is appropriate only for items that are made outside the United States and not currently in the United States. Note that encryption items controlled for EI reasons under ECCNs 5A002, 5D002 or 5E002 on the Commerce Control List (refer to Supplement No.1 to Part 774 of the EAR) are subject to the EAR even if they incorporate less than the *de minimis* level of U.S. content. However, exporters may, as part of a classification request, ask that certain 5A002 and 5D002 parts, components and software also be made eligible for *de minimis* treatment (see § 734.4(b) of the EAR). The review of *de minimis* eligibility will take into account national security interests.

* * * * *

8. Section 732.3 is amended by revising paragraph (e)(2) to read as follows:

§ 732.3 Steps regarding the ten general prohibitions.

* * * * *

(e) *Step 10: Foreign-made items incorporating U.S.-origin items and the* de minimis *rule.*

* * * * *

(2) *Guidance for calculations.* For guidance on how to calculate the U.S.-controlled content, refer to Supplement No. 2 to part 734 of the EAR. Note that certain rules issued by the Office of Foreign Assets Control, certain exports from abroad by U.S.-owned or controlled entities may be prohibited notwithstanding the *de minimis* provisions of the EAR. In addition, the *de minimis* exclusions from the parts and components rule do not relieve U.S. persons of the obligation to refrain from supporting the proliferation of weapons of mass-destruction and missiles as provided in General Prohibition Seven (U.S. Person Proliferation Activity) described in § 736.2(b)(7) of the EAR. Note that encryption items controlled for EI reasons under ECCNs 5A002, 5D002 or 5E002 on the Commerce Control List (refer to Supplement No.1 to Part 774 of the EAR) are subject to the EAR even if they incorporate less than the *de minimis* level of U.S. content. However, exporters may, as part of a classification request, ask that certain 5A002 and 5D002 parts, components and software also be made eligible for *de minimis* treatment (see § 734.4(b) of the EAR).

* * * * *

PART 734—[AMENDED]

9. Section 734.4 is amended by revising paragraph (b) to read as follows:

§ 734.4 De minimis U.S. content.

* * * * *

(b) There is no *de minimis* level for items controlled for EI reasons under ECCNs 5A002, 5D002 and 5E002 absent written authorization from BXA. Exporters may, as part of a classification request, ask that software controlled under ECCN 5D002 and eligible for export under the ''retail'' or ''source code'' provisions of license exception ENC, and parts and components controlled under ECCN 5A002, be made eligible for *de minimis* treatment. The review of *de minimis* eligibility will take into account national security interests.

* * * * *

PART 740—[AMENDED]

10. Section 740.9 is amended by adding a sentence at the end of paragraph (c)(2) and by revising paragraphs (c)(3) and (c)(4)(i) to read as follows:

§ 740.9 Temporary imports, exports, and reexports (TMP).

* * * * *

(c) *Exports of beta test software* * * *

(2) * * * In addition, encryption software under ECCN 5D002 is further restricted from being exported or reexported to Cuba, Iran, Iraq, Libya, North Korea, Sudan or Syria.

(3) *Eligible software.* All software that is controlled by the Commerce Control List (Supplement No. 1 to part 774 of the EAR), and under Commerce licensing jurisdiction, is eligible for export and reexport, subject to the restrictions of this paragraph (c). Encryption software controlled for EI reasons under ECCN 5D002 is eligible for export and reexport under this paragraph (c) provided the exporter has submitted by the time of export the information described in paragraphs (a) through (e) of Supplement 6 to Part 742 to BXA, with a copy to the ENC Encryption Request Coordinator. The names and addresses of the testing consignees, except names and addresses of individual consumers, and the name and version of the beta software should be reported consistent with § 740.17(e)(5). Any final product must

be reviewed and classified under the requirements of § 740.17.

(4) * * *

(i) The software producer intends to market the software to the general public after completion of the beta testing, as described in the General Software Note found in Supplement 2 to Part 774 or the Cryptography Note in Category 5—part II of the Commerce Control List (Supplement No. 1 to part 774 of the EAR);

* * * * *

11. Section 740.13 is amended by revising paragraph (e) to read as follows:

§ 740.13 Technology and software—unrestricted (TSU).

* * * * *

(e) *Unrestricted encryption source code.*(1) Encryption source code controlled under ECCN 5D002, which would be considered publicly available under § 734.3(b)(3) of the EAR and which is not subject to an express agreement for the payment of a licensing fee or royalty for commercial production or sale of any product developed with the source code is released from EI controls and may be exported or reexported without review under License Exception TSU, provided you have submitted written notification to BXA of the Internet location (e.g., URL or Internet address) or a copy of the source code by the time of export. Send the notification to BXA at crypt@bxa.doc.gov with a copy to ENC Encryption Request Coordinator, or see § 740.17(e)(5) for the mailing addresses. Intellectual property protection (e.g., copyright, patent or trademark) will not, by itself, be construed as an express agreement for the payment of a licensing fee or royalty for commercial production or sale of any product developed using the source code.

(2) Object code resulting from the compiling of source code which would be considered publicly available can be exported under TSU if the requirements of this section are otherwise met and no fee or payment (other than reasonable and customary fees for reproduction and distribution) is required for the object code. See § 740.17(b)(4)(i) for the treatment of object code where a fee or payment is required.

(3) You may not knowingly export or reexport source code or products developed with this source code to Cuba, Iran, Iraq, Libya, North Korea, Sudan or Syria.

(4) Posting of the source code or corresponding object code on the Internet (e.g., FTP or World Wide Web site) where it may be downloaded by anyone would not establish ''knowledge'' of a prohibited export or reexport, including that described in paragraph (e)(2) of this section. In addition, such posting would not trigger ''red flags'' necessitating the affirmative duty to inquire under the ''Know Your Customer'' guidance provided in Supplement No. 3 to part 732 of the EAR.

12. Section 740.17 is revised to read as follows:

§ 740.17 Encryption commodities and software (ENC).

License Exception ENC authorizes the export and reexport of encryption items classified under ECCNs 5A002, 5D002 and 5E002. No encryption item(s) may be exported under this license exception to Cuba, Iran, Iraq, Libya, North Korea, Sudan or Syria. Reporting requirements apply to exports made under the authority of License Exception ENC; see paragraph (e) of this section for these requirements.

(a) *Exports and reexports of encryption items.* Exports and reexports of encryption items classified under ECCNs 5A002, 5D002 and 5E002 are authorized to any end-user located in the countries listed in Supplement 3 to this part 740, except for exports of cryptanalytic items (as defined in Part 772 of the EAR) to government end-users. These items may also be exported or reexported to any destination for the internal use of foreign subsidiaries or offices of firms, organizations and governments headquartered in Canada or in countries listed in Supplement 3 to this part 740.

(b) For all other countries, you may export and reexport encryption commodities, software and components (as defined in part 772 of the EAR) under the provisions of License Exception ENC as enumerated in this section. For exports and reexports of encryption items which contain an open cryptographic interface (as defined in part 772 of the EAR), see paragraph (b)(5) of this section.

(1) *Encryption items for U.S. subsidiaries.* Exports and reexports of any encryption item classified under ECCNs 5A002, 5D002 and 5E002 of any key length are authorized to foreign subsidiaries of U.S. companies (as defined in part 772 of the EAR) without review and classification. This includes source code and technology for internal company use, such as the development of new products. License Exception ENC also authorizes transfers by U.S. companies of encryption technology controlled under 5E002 to foreign nationals in the United States, (except nationals of Cuba, Iran, Iraq, Libya, North Korea, Sudan or Syria) for internal company use, including the development of new products. All items produced or developed by U.S. subsidiaries with encryption commodities, software and technology exported under this paragraph are subject to the EAR and require review and classification before any sale or retransfer outside of the U.S. company.

(2) *Encryption commodities and software.* (i) Exports and reexports of any encryption commodity, general purpose toolkit, software and component are authorized after review and classification by BXA under ECCNs 5A002 and 5D002 to any individual, commercial firm or other non-government end-user outside the countries (except Cuba, Iraq, Iran, Libya, North Korea, Sudan or Syria) listed in Supplement 3 to this part 740. Encryption products classified under this paragraph require a license before export and reexport to governments (as defined in part 772 of the EAR) outside the countries listed in Supplement 3 to this part 740. The restriction limiting exports or reexports to internal company proprietary use is removed.

(ii) Certain restrictions apply to Internet and telecommunications service providers. Internet and telecommunications service providers can obtain and use any encryption product for their internal use and to provide any service under License Exception ENC. However, a license is required for the use of any product not classified as retail to provide services specific to government end-users outside the countries listed in Supplement 3 to this part 740, e.g., WAN, LAN, VPN, voice and dedicated-link services; application specific and e-commerce services and PKI encryption services specifically for government end-users.

(3) *Retail encryption commodities and software.* Exports and reexports to any end-user of encryption commodities, software and components are authorized after review and classification by BXA as retail under ECCNs 5A002 and 5D002. Encryption products exported or reexported under this paragraph (b)(3) can be used to provide services to any entity. Internet or telecommunications service providers can obtain retail products under License Exception ENC and use them to provide any service to any entity. Retail encryption commodities, software and components are products:

(i) Generally available to the public by means of any of the following:

(A) Sold in tangible form through retail outlets independent of the manufacturer;

(B) Specifically designed for individual consumer use and sold or

transferred through tangible or intangible means; or

(C) Which are sold or will be sold in large volume without restriction through mail order transactions, electronic transactions, or telephone call transactions; and

(ii) Meeting all of the following:

(A) The cryptographic functionality cannot be easily changed by the user;

(B) Substantial support is not required for installation and use;

(C) The cryptographic functionality has not been modified or customized to customer specification; and

(D) Are not network infrastructure products such as high end routers or switches designed for large volume communications.

(iii) Subject to the criteria in paragraphs (b)(3)(i) and (ii) of this section, retail encryption products include (but are not limited to) general purpose operating systems and their associated user-interface client software or general purpose operating systems with embedded networking and server capabilities; non-programmable encryption chips and chips that are constrained by design for retail products; low-end routers, firewalls and networking or cable equipment designed for small office or home use; programmable database management systems and associated application servers; low-end servers and application-specific servers (including client-server applications, e.g., Secure Socket Layer (SSL)-based applications) that interface directly with the user; and encryption products distributed without charge or through free or anonymous downloads.

(iv) Encryption products and network-based applications which provide functionality equivalent to other encryption products classified as retail will be considered retail.

(v) 56-bit products with key exchange mechanisms greater than 512 bits and up to and including 1024 bits, or equivalent products not classified as mass market, or finance-specific encryption commodities and software of any key length restricted by design (e.g., highly field-formatted with validation procedures and not easily diverted to other end-uses) and used to secure financial communications such as electronic commerce may be exported under the retail provisions of this section immediately after submitting a completed classification request to BXA.

(vi) Items which would be controlled only because they incorporate components or software which provide short-range wireless encryption functions may be exported without review and classification by BXA and without reporting under the retail provisions of this section.

(4) *Commercial encryption source code.* Exports and reexports of encryption source code not released under § 740.13(e) are authorized subject to the following provisions:

(i) Encryption source code which would be considered publicly available under § 734.3(b)(3) of the EAR and which is subject to an express agreement for the payment of a licensing fee or royalty for commercial production or sale of any product developed using the source code (or object code resulting from compiling of any encryption such source code which would be considered publicly available) can be exported or reexported using License Exception ENC to any end-user without review and classification provided you have submitted to BXA (with a copy to the ENC Encryption Request Coordinator) by the time of export, written notification of the Internet location (e.g. URL or Internet address) or a copy of the source code. You may not knowingly export or reexport source code, object code or products developed with this source code to Cuba, Iran, Iraq, Libya, North Korea, Sudan or Syria. Posting of the source code or corresponding object code on the Internet (e.g., FTP or World Wide Web site) where it may be downloaded by anyone would not establish ''knowledge'' of a prohibited export or reexport. In addition, such posting would not trigger ''red flags'' necessitating the affirmative duty to inquire under the ''Know Your Customer'' guidance provided in Supplement No. 3 to part 732 of the EAR.

(ii) Encryption source code which would not be considered publicly available and which does not include source code that when compiled provides an open cryptographic interface (see paragraph (b)(5) of this section), may be exported or reexported using License Exception ENC to any individual, commercial firm or other non-government end-user after submitting a complete classification request to BXA with a copy to the ENC Coordinator.

(5) *Cryptographic interfaces.* (i) Exports or reexports of encryption commodities, software and components which provide an open cryptographic interface (as defined in part 772 of the EAR) may be exported under License Exception ENC to any end-user located in any country listed in Supplement 3 to this part 740. Exports or reexports to other destinations of encryption commodities, software and components which provide an open cryptographic interface are not eligible to use License Exception ENC and require a license (unless exported to a subsidiary of a U.S. company under paragraph (b)(1) of this section). This does not apply to source code that would be considered publicly available under § 734.3(b)(3) of the EAR.

(ii) Encryption items which are limited to allowing foreign-developed cryptographic products to operate with U.S. products (e.g. signing) can be exported or reexported under License Exception ENC to any end-user. Such exports are subject to reporting requirements (see paragraph (e)(3) of this section). No review of the foreign-developed cryptography is required.

(c) *Reexports and Transfers.* U.S. or foreign distributors, resellers or other entities who are not original manufacturers of encryption commodities and software are permitted to use License Exception ENC only in instances where the export or reexport meets the applicable terms and conditions of this section. Transfers of encryption items listed in paragraph (b) of this section to government end-users or end-uses within the same country are prohibited unless otherwise authorized by license or license exception. Foreign products developed with or incorporating U.S.-origin encryption source code, components or toolkits remain subject to the EAR but do not require review and classification by BXA and can be exported or reexported without further authorization.

(d) *Eligibility for License Exception ENC.* (1) *Review and classification.* You may initiate review and classification of your encryption items as required by this section by submitting a classification request in accordance with the provisions of § 748.3(b) and Supplement 6 to Part 742 of the EAR. Indicate ''License Exception ENC'' in Block 9: Special purpose, on form BXA–748P. Submit the original request to BXA and send a copy of the request to ENC Encryption Request Coordinator (see paragraph (e)(5) of this section for mailing addresses).

(i) Exporters may immediately export and reexport any encryption item except ''cryptanalytic items'' as defined in part 772 of the EAR to any end-user located in the countries listed in Supplement 3 to this part 740 provided the exporter has submitted to BXA a completed classification request by the time of export.

(ii) Exporters may, thirty days after receipt of a completed classification request by BXA, export and reexport to any non-government end-user located outside the countries listed in Supplement 3 to this part 740 any encryption product eligible under

paragraph (b)(2), (b)(3) or (b)(4) of this section unless otherwise notified by BXA. No exports to government end-users located outside of countries listed in Supplement 3 to this part 740 are allowed under this provision. BXA reserves the right to suspend eligibility to export under this provision while a classification is pending.

(2) *Grandfathering.* Finance-specific and 56-bit products previously reviewed and classified by BXA can be exported and reexported to any end-user without further review. Other encryption commodities, software or components previously approved for export can be exported and reexported without further review to any end-user in countries listed in Supplement 3 to this part 740 countries and to any non-government end-user outside of the countries listed in Supplement 3 to this part 740. This includes products approved under a license, an Encryption Licensing Arrangement, or classified as eligible to use License Exception ENC (except for those products which were only authorized for export to U.S. subsidiaries). Exports of products not classified by BXA as ''retail'' to governments of countries not listed in Supplement 3 to this part 740 require a license.

(3) *Key length increases.* Exporters can increase the key lengths of previously classified products and continue to export without another review. No other change in the cryptographic functionality is allowed.

(i) Any product previously classified as 5A002 or 5D002 can, with any upgrade to the key length used for confidentiality or key exchange algorithms, be exported or reexported under provisions of License Exception ENC to any non-government end-user without an additional review. Another classification is necessary to determine eligibility as a ''retail'' product under paragraph (b)(3) of this section.

(ii) Exporters must certify to BXA in a letter from a corporate official that the only change to the encryption product is the key length for confidentiality or key exchange algorithms and there is no other change in cryptographic functionality. Certifications must include the original authorization number issued by BXA and the date of issuance. BXA must receive this certification prior to any export of an upgraded product. The certification should be sent to BXA, with a copy sent to the ENC Encryption Request Coordinator (see paragraph (e)(5) of this section for mailing addresses).

(e) *Reporting requirements.* (1) No reporting is required for exports of:

(i) Any encryption to U.S. subsidiaries for internal company use;

(ii) Finance-specific products;

(iii) Encryption commodities or software with a symmetric key length not exceeding 64 bits or otherwise classified as qualifying for mass market treatment;

(iv) Retail products exported to individual consumers;

(v) Items exported via free or anonymous download;

(vi) Encryption items from or to a U.S. bank, financial institution or their subsidiaries, affiliates, customers or contractors for banking or financial operations;

(vii) Items which incorporate components limited to providing short-range wireless encryption functions;

(viii) Retail operating systems, or desktop applications (e.g. e-mail, browsers, games, word processing, data base, financial applications or utilities) designed for, bundled with, or pre-loaded on single CPU computers, laptops or hand-held devices;

(ix) Client Internet appliance and client wireless LAN cards;

(x) Foreign products developed by bundling or compiling of source code.

(2) Exporters must provide all available information as follows:

(i) For items exported to a distributor or other reseller, including subsidiaries of U.S. firms, the name and address of the distributor or reseller, the item and the quantity exported and, if collected as part of the distribution process by the exporter, the end-user's name and address;

(ii) For items exported through direct sale, the name and address of the recipient, the item, and the quantity exported (except for retail products if the end-user is an individual consumer); and

(iii) For exports of 5E002 items to be used for technical assistance and which are not released by § 744.9 of the EAR, the name and address of the end-user.

(3) For direct sales or transfers of encryption components, commercial source code described under paragraph (b)(4) of this section, technology or general purpose encryption toolkits to foreign manufacturers when intended for use in foreign products developed for commercial sale, you must submit the names and addresses of the manufacturers using these items and, when the product is made available for commercial sale, a non-proprietary technical description of the foreign products for which the component, source code or toolkit are being used (e.g., brochures, other documentation, descriptions or other identifiers of the final foreign product; the algorithm and key lengths used; general programming interfaces to the product, if known; any standards or protocols that the foreign product adheres to; and source code, if available.).

(4) Exporters of encryption commodities, software and components which were previously classified under License Exception ENC, or which have been licensed for export under an Encryption Licensing Arrangement, must comply with the reporting requirements of this section.

(5) You must submit reports required under this section semi-annually to BXA, unless otherwise provided in this paragraph (e)(5). For exports occurring between January 1 and June 30, a report is due no later than August 1 of that year. For exports occurring between July 1 and December 31, a report is due no later than February 1 the following year. Reports must include the classification or other authorization number. These reports must be provided in electronic form to BXA; suggested file formats for electronic submission include spreadsheets, tabular text or structured text. Exporters may request other reporting arrangements with BXA to better reflect their business models. Reports should be sent electronically to crypt@bxa.doc.gov, or disks and CDs can be mailed to the following addresses:

(i) Department of Commerce, Bureau of Export Administration, Office of Strategic Trade and Foreign Policy Controls, 14th Street and Pennsylvania Ave., N.W., Room 2705, Washington, D.C. 20230, Attn: Encryption Reports.

(ii) A copy of the report should be sent to: Attn: ENC Encryption Request Coordinator, 9800 Savage Road, Suite 6131, Ft. Meade, MD 20755–6000.

13. A new Supplement No. 3 is added to part 740 to read as follows:

Supplement No. 3 to Part 740—License Exception ENC Country Group

Austria
Australia
Belgium
Czech Republic
Denmark
Finland
France
Germany
Greece
Hungary
Ireland
Italy
Japan
Luxembourg
Netherlands
New Zealand
Norway
Poland
Portugal
Spain
Sweden

Switzerland
United Kingdom

PART 742—[AMENDED]

14. Section 742.15 is amended by revising paragraphs (a), (b) introductory text, (b)(1), and (b)(2) to read as follows:

§ 742.15 Encryption items.

* * * * *

(a) *License requirements.* Licenses are required for exports and reexports of encryption items (EI) classified under ECCNS 5A002, 5D002 and 5E002 to all destinations except Canada. Refer to part 740 of this EAR for licensing exceptions and to part 772 of the EAR for the definition of ''encryption items.''

(b) *Licensing policy.* The following licensing policies apply to items identified in paragraph (a) of this section. Except as otherwise noted, applications will be reviewed on a case-by-case basis by BXA, in conjunction with other agencies, to determine whether the export or reexport is consistent with U.S. national security and foreign policy interests. For subsequent bundling and updates of these items see paragraph (n) of § 770.2 of the EAR. No exports without a license are authorized to Cuba, Iran, Iraq, Libya, North Korea, Sudan or Syria.

(1) *Encryption items under ECCNs 5A992, 5D992 and 5E992.* Certain encryption commodities, software and technology may be classified under ECCNs 5A992, 5D992 or 5E992. These items continue to be subject to AT1 controls. Such items include encryption commodities, software and technology with key lengths up to and including 56-bits with an asymmetric key exchange algorithm not exceeding 512 bits; products which only provide key management with asymmetric key exchange algorithms not exceeding 512 bits; and mass market encryption commodities and software with key lengths not exceeding 64-bits for the symmetric algorithm. Refer to the Cryptography Note (Note 3) to part II of Category 5 of the CCL for a definition of mass market encryption commodities and software. Key exchange mechanisms, proprietary key exchange mechanisms, or company proprietary commodities and software implementations may also be eligible for this treatment. Exporters may self-classify such 5A992, 5D992 or 5E992 items and export them without review and classification by BXA provided you have submitted to BXA and the ENC Encryption Request Coordinator by the time of export the information described in paragraphs (a) through (e) of Supplement 6 to this part 742. Notification should be made by e-mail to crypt@bxa.doc.gov.

(2) *Encryption items under ECCNs 5A002, 5D002 and 5E002.* All encryption commodities, software and components classified by BXA under ECCNs 5A002, 5D002 and 5E002 except cryptanalytic items are authorized for export and reexport to any end-user in the countries listed in Supplement 3 to Part 740 of the EAR. Items classified by BXA as retail products under ECCNs 5A002 and 5D002 are authorized for export and reexport to any end-user. All 5A002, 5D002 and 5E002 encryption items are authorized for export or reexport to any individual, commercial firm or other non-government end-user in countries not listed in Supplement 3 to Part 740 of the EAR. No exports of such items are authorized without a license to Cuba, Iran, Iraq, North Korea, Libya, Sudan or Syria. Any encryption item (including technology classified under ECCN 5E002) is authorized for export or reexport to U.S. subsidiaries (as defined in part 772).

* * * * *

15. Supplement No. 6 to part 742 is revised to read as follows:

Supplement No. 6 to Part 742—Guidelines for Submitting a Classification Request for Encryption Items

Classification requests for encryption items must be submitted on Form BXA–748P, in accordance with § 748.3 of the EAR. Insert the phrase ''License Exception ENC'' in Block 9: Special Purpose in Form BXA–748P. Failure to insert this phrase will delay processing. BXA recommends that such requests be delivered via courier service to: Bureau of Export Administration, Office of Exporter Services, Room 2705, 14th Street and Pennsylvania Ave., N.W. Washington, D.C. 20230. For electronic submissions via SNAP, you may fax a copy of the support documents to BXA at (202) 501–0784. In addition, you must send a copy of the classification request and all support documents to: Attn: ENC Encryption Request Coordinator, 9800 Savage Road, Suite 6131, Fort Meade, MD 20755–6000. For all classification requests of encryption items provide brochures or other documentation or specifications related to the technology, commodity or software, relevant product descriptions, architecture specifications, and as necessary for the technical review, source code. Also, indicate any prior reviews and classifications of the product, if applicable to the current submission. Provide the following information in a cover letter with the classification request:

(a) State the name of the encryption item being submitted for review.

(b) State that a duplicate copy has been sent to the ENC Encryption Request Coordinator.

(c)For classification request for a commodity or software, provide the following information:

(1) Description of all the symmetric and asymmetric encryption algorithms and key lengths and how the algorithms are used. Specify which encryption modes are supported (e.g., cipher feedback mode or cipher block chaining mode).

(2) State the key management algorithms, including modulus sizes, that are supported.

(3) For products with proprietary algorithms, include a textual description and the source code of the algorithm.

(4) Describe the pre-processing methods (e.g., data compression or data interleaving) that are applied to the plaintext data prior to encryption.

(5) Describe the post-processing methods (e.g., packetization, encapsulation) that are applied to the cipher text data after encryption.

(6) State the communication protocols (e.g., X.25, Telnet or TCP) and encryption protocols (e.g., SSL, IPSEC or PKCS standards) that are supported.

(7) Describe the encryption-related Application Programming Interfaces (APIs) that are implemented and/or supported. Explain which interfaces are for internal (private) and/or external (public) use.

(8) Describe whether the cryptographic routines are statically or dynamically linked, and the routines (if any) that are provided by third-party modules or libraries. Identify the third-party manufacturers of the modules or toolkits.

(9) For commodities or software using Java byte code, describe the techniques (including obfuscation, private access modifiers or final classes) that are used to protect against decompilation and misuse.

(10) State how the product is written to preclude user modification of the encryption algorithms, key management and key space.

(11) For products that qualify as ''retail'', explain how the product meets the listed criteria in § 740.17(b)(3) of the EAR.

(12) For products which incorporate an open cryptographic interface as defined in part 772 of the EAR, describe the Open Cryptographic Interface.

(d) For classification requests regarding components, provide the following additional information:

(1) Reference the application for which the components are used in, if known;

(2) State if there is a general programming interface to the component;

(3) State whether the component is constrained by function; and

(4) the encryption component and include the name of the manufacturer, component model number or other identifier.

(e) For classification requests for source code, provide the following information:

(1) If applicable, reference the executable (object code) product that was previously reviewed;

(2) Include whether the source code has been modified, and the technical details on how the source code was modified; and

(3) Include a copy of the sections of the source code that contain the encryption algorithm, key management routines and their related calls.

(f) For step-by-step instructions and guidance on submitting classification requests for License Exception ENC, visit our webpage at www.bxa.gov/Encryption.

PART 744—[AMENDED]

16. Section 744.9 is amended by revising paragraph (a) to read as follows:

§ 744.9 Restrictions on technical assistance by U.S. persons with respect to encryption items.

(a) *General prohibition.* No U.S. person may, without authorization from BXA, provide technical assistance (including training) to foreign persons with the intent to aid a foreign person in the development or manufacture outside the United States of encryption commodities and software that, if of United States origin, would be controlled for EI reasons under ECCN 5A002 or 5D002. Technical assistance may be exported immediately to nationals of the countries listed in Supplement 3 to part 740 of the EAR (except for technical assistance to government end-users for cryptanalytic items) provided the exporter has submitted to BXA a completed classification request by the time of export. Note that this prohibition does not apply if the U.S. person providing the assistance has a license or is otherwise entitled to export the encryption commodities and software in question to the foreign person(s) receiving the assistance. Note in addition that the mere teaching or discussion of information about cryptography, including, for example, in an academic setting or in the work of groups or bodies engaged in standards development, by itself would not establish the intent described in this section, even where foreign persons are present.

* * * * *

PART 748—[AMENDED]

17. Section 748.3 is amended by revising paragraph (b)(3) to read as follows:

§ 748.3 Classification and Advisory Opinions.

* * * * *

(b) * * *

(3) Classification requests for a Department of Commerce review of encryption software transferred from the U.S. Munitions List consistent with Executive Order 13026 of November 15, 1996 (3 CFR, 1996 Comp., p. 228) and pursuant to the Presidential Memorandum of that date are required prior to export to determine eligibility for release from EI controls. Exporters may self-classify 5A992, 5D992 or 5E992 items after submitting to BXA and the ENC Encryption Request Coordinator by the time of export the information described in paragraphs 1–5 of Supplement 6 to Part 742 of the EAR. Refer to § 742.15(b) and Supplement No. 6 to Part 742 of the EAR for instructions on submitting such requests for mass market encryption software.

* * * * *

PART 770—[AMENDED]

17. Section 770.2 is amended by revising paragraph (n) to read as follows:

§ 770.2 Item interpretations.

* * * * *

(n) *Interpretation 14: Encryption commodity and software reviews.* Classification of encryption commodities or software is required to determine eligibility for certain licensing mechanisms (see §§ 740.13(e) and 740.17 of the EAR) and exports to subsidiaries of U.S. companies (see § 740.17(b)(1) of the EAR). Note that subsequent bundling, patches, upgrades or releases, including name changes, may be exported or reexported under the applicable provisions of the EAR without further review as long as the functional encryption capacity of the originally reviewed product has not been modified or enhanced. This does not extend to products controlled under a different category on the CCL.

PART 772—[AMENDED]

18. Part 772 is amended by designating the existing text as § 772.1 and adding a section heading, by adding the definition of ''Cryptanalytic items'' in alphabetical order, and by revising the definition of ''Open cryptographic interface'', to read as follows:

§ 772.1 Definitions of terms as used in the Export Administration Regulations (EAR).

* * * * *

''Cryptanalytic items''. Systems, equipment, applications, specific electronic assemblies, modules and integrated circuits designed or modified to perform cryptanalytic functions, software having the characteristics of cryptanalytic hardware or performing cryptanalytic functions, or technology for the development, production or use of cryptanalytic commodities or software.

* * * * *

''Open cryptographic interface''. A mechanism which is designed to allow a customer or other party to insert cryptographic functionality without the intervention, help or assistance of the manufacturer or its agents, e.g., manufacturer's signing of cryptographic code or proprietary interfaces. If the cryptographic interface implements a fixed set of cryptographic algorithms, key lengths or key exchange management systems, that cannot be changed, it will not be considered an ''open'' cryptographic interface. All general application programming interfaces (e.g., those that accept either a cryptographic or non-cryptographic interface but do not themselves maintain any cryptographic functionality) will not be considered ''open'' cryptographic interfaces.

* * * * *

PART 774—[AMENDED]

19. In Supplement No. 1 to part 774 (the Commerce Control List), Category 5—Telecommunications and ''Information Security'', part II. ''Information Security'', Export Control Classification Numbers (ECCNs) 5A002, 5A992, 5D992, and 5E992 are amended by revising the ''List of Items Controlled'' section to read as follows:

5A002 Systems, equipment, application specific ''electronic assemblies'', modules and integrated circuits for ''information security'', and other specially designed components therefor.

* * * * *

List of Items Controlled

Unit: $ value

Related Controls: See also 5A992. This entry does not control: (a) ''Personalized smart cards'' where the cryptographic capability is restricted for use in equipment or systems excluded from control paragraphs (b) through (f) of this note. Note that if a ''personalized smart card'' has multiple functions, the control status of each function is assessed individually; (b) Receiving equipment for radio broadcast, pay television or similar restricted audience broadcast of the consumer type, without digital encryption except that exclusively used for sending the billing or program-related information back to the broadcast providers; (c) Portable or mobile radiotelephones for civil use (e.g., for use with commercial civil cellular radio communications systems) that are not capable of end-to-end encryption; (d) Equipment where the cryptographic capability is not user-accessible and which is specially designed and limited to allow any of the following: (1) Execution of copy-protected ''software''; (2) access to any of the following: (a) Copy-protected read-only media; or (b) Information stored in encrypted form on media (e.g., in connection with the protection of intellectual property rights) where the media is offered for sale in identical sets to the public; or (3) one-time encryption of copyright protected audio/video data; (e) Cryptographic equipment specially designed and limited for banking use or money transactions; (f) Cordless telephone equipment not capable of end-to-end encryption where the maximum effective range of unboosted cordless operation (e.g., a single, unrelayed hop between terminal and home basestation) is less than 400 meters

according to the manufacturer's specifications. These items are controlled under ECCN 5A992.

Related Definitions: (1) The term ''money transactions'' in paragraph (e) of Related Controls includes the collection and settlement of fares or credit functions. (2) For the control of global navigation satellite systems receiving equipment containing or employing decryption (e.g., GPS or GLONASS) see 7A005.

Items:

Technical Note: Parity bits are not included in the key length.

a. Systems, equipment, application specific ''electronic assemblies'', modules and integrated circuits for ''information security'', and other specially designed components therefor:

a.1. Designed or modified to use ''cryptography'' employing digital techniques performing any cryptographic function other than authentication or digital signature having any of the following:

Technical Notes: 1. Authentication and digital signature functions include their associated key management function.

2. Authentication includes all aspects of access control where there is no encryption of files or text except as directly related to the protection of passwords, Personal Identification Numbers (PINs) or similar data to prevent unauthorized access.

3. ''Cryptography'' does not include ''fixed'' data compression or coding techniques.

Note: 5A002.a.1 includes equipment designed or modified to use ''cryptography'' employing analog principles when implemented with digital techniques.

a.1.a. A ''symmetric algorithm'' employing a key length in excess of 56-bits; *or*

a.1.b. An ''asymmetric algorithm'' where the security of the algorithm is based on any of the following:

a.1.b.1. Factorization of integers in excess of 512 bits (*e.g.,* RSA);

a.1.b.2. Computation of discrete logarithms in a multiplicative group of a finite field of size greater than 512 bits (*e.g.,* Diffie-Hellman over Z/pZ); or

a.1.b.3. Discrete logarithms in a group other than mentioned in 5A002.a.1.b.2 in excess of 112 bits (*e.g.,* Diffie-Hellman over an elliptic curve);

a.2. Designed or modified to perform cryptanalytic functions;

a.3. [Reserved]

a.4. Specially designed or modified to reduce the compromising emanations of information-bearing signals beyond what is necessary for health, safety or electromagnetic interference standards;

a.5. Designed or modified to use cryptographic techniques to generate the spreading code for ''spread spectrum'' systems, including the hopping code for ''frequency hopping'' systems;

a.6. Designed or modified to provide certified or certifiable ''multilevel security'' or user isolation at a level exceeding Class B2 of the Trusted Computer System Evaluation Criteria (TCSEC) or equivalent;

a.7. Communications cable systems designed or modified using mechanical, electrical or electronic means to detect surreptitious intrusion.

5A992 Equipment not controlled by 5A002.

* * * * *

List of Items Controlled

Unit: $ value

Related Controls: N/A

Related Definitions: N/A

Items:

a. Telecommunications and other information security equipment containing encryption.

b. ''Information security'' equipment, n.e.s., (*e.g.,* cryptographic, cryptanalytic, and cryptologic equipment, n.e.s.) and components therefor.

5D992 ''Information Security'' ''software'' not controlled by 5D002.

* * * * *

List of Items Controlled

Unit: $ value

Related Controls: N/A

Related Definitions: N/A

Items: 1

a. ''Software'', as follows:

a.1 ''Software'' specially designed or modified for the ''development'', ''production'', or ''use'' of telecommunications and other information security equipment containing encryption (*e.g.,* equipment controlled by 5A992.a);

a.2. ''Software'' specially designed or modified for the ''development'', ''production:, or ''use'' of information security or cryptologic equipment (*e.g.,* equipment controlled by 5A992.b).

b. ''Software'', as follows:

b.1. ''Software'' having the characteristics, or performing or simulating the functions of the equipment controlled by 5A992.a.

b.2. ''Software'' having the characteristics, or performing or simulating the functions of the equipment controlled by 5A992.b.

c. ''Software'' designed or modified to protect against malicious computer damage, *e.g.*, viruses.

5E992 ''Information Security'' ''technology'', not controlled by 5E002.

* * * * *

List of Items Controlled

Unit: N/A

Related Controls: N/A

Related Definitions: N/A

Items:

a. ''Technology'' n.e.s., for the ''development'', ''production'' or ''use'' of telecommunications equipment and other information security and containing encryption (*e.g.*, equipment controlled by 5A992.a) or ''software'' controlled by 5D992.a.1 or b.1.

b. ''Technology'', n.e.s., for the ''development'', ''production'' or ''use'' of ''information security'' or cryptologic equipment (*e.g.*, equipment controlled by 5A992.b), or ''software'' controlled by 5D992.a.2, b.2, or c.

Dated: October 11, 2000.

R. Roger Majak,

Assistant Secretary for Export Administration.

[FR Doc. 00–26646 Filed 10–18–00; 8:45 am]

BILLING CODE 3510–33–P

DEPARTMENT OF LABOR

Occupational Safety and Health Administration

29 CFR Part 1952

North Carolina State Plan: Coverage of the American National Red Cross; Change in Level of Federal Enforcement

AGENCY: Occupational Safety and Health Administration (OSHA), U.S. Department of Labor.

ACTION: Final rule.

SUMMARY: This document amends OSHA regulations to reflect the Assistant Secretary's approval of a change to the North Carolina occupational safety and health state plan excluding coverage of the American National Red Cross and its facilities from the plan and assumption of Federal enforcement authority over the American National Red Cross in North Carolina.

EFFECTIVE DATE: October 19, 2000.

FOR FURTHER INFORMATION CONTACT: Bonnie Friedman, Director, Office of Information and Consumer Affairs, Occupational Safety and Health Administration, U.S. Department of Labor, Room N3637, 200 Constitution Avenue NW., Washington, DC 20210, (202) 693–1999.

SUPPLEMENTARY INFORMATION:

A. Background

Section 18 of the Occupational Safety and Health Act of 1970 (the Act), 29 U.S.C. 667, provides that States which wish to assume responsibility for developing and enforcing their own occupational safety and health standards may do so by submitting and obtaining Federal approval of a State plan. State plan approval occurs in stages which include initial approval under section 18(b) of the Act and, ultimately, final approval under section 18(e).

The North Carolina State plan was initially approved on February 1, 1973 (38 FR 3041). On December 18, 1996, OSHA announced the final approval of the North Carolina State plan pursuant to section 18(e) and amended Subpart I of 29 CFR part 1952 to reflect the Assistant Secretary's decision (61 FR

66593). As a result, Federal OSHA relinquished its authority with regard to occupational safety and health issues covered by the North Carolina plan. Federal OSHA retained its authority over Federal government employers and employees; the U.S. Postal Service (USPS), including USPS employees, and contract employees and contractor-operated facilities engaged in USPS mail operations; private sector maritime activities; employment on Indian reservations; enforcement relating to any contractors or subcontractors on any Federal establishment where the land has been ceded to the Federal Government; railroad employment; and enforcement on military bases.

29 CFR 1952.155, which codifies OSHA's final approval decision, provides that any hazard, industry, geographical area, operation or facility over which the State is unable to effectively exercise jurisdiction for reasons not related to the required performance or structure of the plan shall be deemed to be an issue not covered by the plan and shall be subject to Federal enforcement.

In response to jurisdictional questions raised concerning a local chapter of the American National Red Cross, the North Carolina Department of Labor, the State agency responsible for occupational safety and health enforcement, sought a determination from its Attorney General regarding the State's jurisdiction over working conditions at American National Red Cross facilities. On February 4, 2000, the North Carolina Attorney General's Office issued a determination which concluded the ''Red Cross'' to be an ''instrumentality of the federal government'' within the meaning of North Carolina General Statute § 95–128, which provides that the State Occupational Safety and Health Act applies to all employers and employees except ''the federal government, including its departments, agencies and instrumentalities.'' Thus, North Carolina has concluded that it does not have authority under State law to regulate safety and health with regard to working conditions of employees at the American National Red Cross. The State now has requested that such facilities be excluded from coverage under its State plan and that Federal OSHA assume enforcement authority.

Although Federal OSHA believes that most States with OSHA-approved State plans have authority under State law to regulate working conditions of employees of the American National Red Cross and that the Red Cross is *not* a Federal instrumentality, North Carolina law has a somewhat different provision which has been interpreted by the State Attorney General's Office to preclude State OSHA coverage. Therefore, since the State has excluded the American National Red Cross from coverage under its plan and Federal OSHA has determined that Federal coverage of American National Red Cross facilities would be administratively practicable, Federal OSHA will assume jurisdiction over the American National Red Cross facilities in North Carolina.

B. Location of Supplement for Inspection and Copying

A copy of the North Carolina Attorney General determination referenced in this notice as well as information on the North Carolina plan is available during normal business hours at the following locations:

Office of State Programs, Occupational Safety and Health Administration, U.S. Department of Labor, 200 Constitution Avenue NW, Room N3700, Washington, DC 20210;

Office of the Regional Administrator, Occupational Safety and Health Administration, U.S. Department of Labor, Atlanta Federal Center, 61 Forsyth Street, SW, Room 6T50, Atlanta, Georgia 30303; and

Office of the Commissioner, North Carolina Department of Labor, 4 West Edenton Street, Raleigh, North Carolina 27601–1092.

For electronic copies of this notice, visit OSHA's Web Page at http://www.osha.gov/.

C. Public Participation

Under 29 CFR 1953.2(c), the Assistant Secretary may prescribe alternative procedures to expedite the review process or for other good cause which may be consistent with applicable laws. North Carolina's Final Approval determination issued after an opportunity for public comment in 1996, specifically provides that Federal standards and enforcement will apply to safety or health issues the State is unable to cover under its State plan, and this notice implements that provision. Accordingly, OSHA finds that further public participation is not necessary.

D. Decision

To assure worker protection under the OSH Act, Federal OSHA will assume jurisdiction over the American National Red Cross and its facilities in North Carolina. OSHA is hereby amending 29 CFR part 1952, Subpart I, to reflect this change in the scope of the State plan and the level of Federal enforcement in North Carolina

E. Regulatory Flexibility Act

OSHA certifies pursuant to the Regulatory Flexibility Act of 1980 (5 U.S.C. 601 *et seq.*) that this action will not have a significant economic impact on a substantial number of small entities. No additional burden will be placed upon the State government beyond the responsibilities already assumed as part of the approved State plan.

F. Federalism

Executive Order 13132 on ''Federalism'' emphasizes consultation between Federal agencies and the States and establishes specific review procedures the Federal government must follow as it carries out policies which affect State or local governments. OSHA has included in the Supplementary Information section of today's notice a general explanation of the relationship between Federal OSHA and the State Plan States under the Occupational Safety and Health Act. OSHA has consulted with the State on its decision on this issue. Although OSHA has determined that the requirements and consultation procedures provided in Executive Order 13132 are not applicable to State decisions on the extent of State Plan coverage under the OSH Act which have no effect outside the particular State, OSHA has reviewed the decision approved today and believes it has been made in a manner consistent with the principles and criteria set forth in the Executive Order.

This document was prepared under the direction of Charles N. Jeffress, Assistant Secretary of Labor for Occupational Safety and Health. It is issued under section 18 of the OSH Act, (29 U.S.C. 667), 29 CFR Part 1902, and Secretary of Labor's Order No. 1–90 (55 FR 9033).

List of Subjects in 29 CFR Part 1952

Intergovernmental relations, Law enforcement, Occupational safety and health, Reporting and recordkeeping requirements.

Signed at Washington, D.C. this 13 day of October 2000.

Charles N. Jeffress,

Assistant Secretary.

For the reasons set out in the preamble, 29 CFR part 1952 is hereby amended as set forth below:

PART 1952—[AMENDED]

1. The authority citation for part 1952 continues to read as follows:

Authority: Sec 18, 84 Stat, 1608 (29 U.S.C. 667); 29 CFR part 1902, Secretary of Labor's Order No. 1–90 (55 FR 9033).

Subpart I—North Carolina

2. Section 1952.154 is amended by revising paragraph (b) to read as follows:

§ 1952.154 Final approval determination.

* * * * *

(b) Except as otherwise noted, the plan which has received final approval covers all activities of employers and all places of employment in North Carolina. The plan does not cover Federal government employers and employees; the U.S. Postal Service (USPS), including USPS employees, and contract employees and contractor-operated facilities engaged in USPS mail operations; the American National Red Cross; private sector maritime activities; employment on Indian reservations; enforcement relating to any contractors or subcontractors on any Federal establishment where the land has been ceded to the Federal Government; railroad employment; and enforcement on military bases.

* * * * *

3. Section 1952.155 is amended by revising paragraph (b)(1) to read as follows:

§ 1952.155 Level of Federal enforcement.

* * * * *

(b)(1) In accordance with section 18(e), final approval relinquishes Federal OSHA authority only with regard to occupational safety and health issues covered by the North Carolina plan. OSHA retains full authority over issues which are not subject to State enforcement under the plan. Thus, Federal OSHA retains its authority relative to safety and health in private sector maritime activities and will continue to enforce all provisions of the Act, rules or orders, and all Federal standards, current or future, specifically directed to private sector maritime activities (occupational safety and health standards comparable to 29 CFR Parts 1915, shipyard employment; 1917, marine terminals; 1918, longshoring; and 1919; gear certification, as well as provisions of general industry and construction standards (29 CFR Parts 1910 and 1926) appropriate to hazards found in these employments); employment on Indian reservations; enforcement relating to any contractors or subcontractors on any Federal establishment where the land has been ceded to the Federal Government; railroad employment, not otherwise regulated by another Federal agency; and enforcement on military bases. Federal jurisdiction is also retained with respect to Federal government employers and employees; the U.S. Postal Service (USPS), including USPS employees, and contract employees and contractor-operated facilities engaged in USPS mail operations; and the American National Red Cross.

* * * * *

[FR Doc. 00–26946 Filed 10–18–00; 8:45 am]

BILLING CODE 4510–26–P

DEPARTMENT OF THE INTERIOR

Minerals Management Service

30 CFR Part 206

RIN 1010–AC72

Amendments to Gas Valuation Regulations for Indian Leases

AGENCY: Minerals Management Service (MMS), Interior.

ACTION: Final rule.

SUMMARY: MMS is removing the special timing requirements for adjustments and audits of royalties on gas produced from Indian leases in Montana and North Dakota. If not removed, these timing requirements could force tribal and MMS auditors to expend additional time and money or postpone ongoing audits to meet the restricted time periods. Removing these timing restrictions should increase royalties collected for Indian leases in these States.

DATES: The effective date of this final rule is November 20, 2000.

FOR FURTHER INFORMATION CONTACT: David S. Guzy, Chief, Rules and Publications Staff, Minerals Management Service, Royalty Management Program, P.O. Box 25165, MS 3021, Denver, CO 80225–0165; telephone (303) 231–3432; fax (303) 231–3385; or e-mail David.Guzy@mms.gov.

SUPPLEMENTARY INFORMATION: The principal author of this final rule is Richard Adamski, Royalty Valuation Division, Royalty Management Program (RMP), MMS.

I. Background

On August 10, 1999, MMS published a final rule titled ''Amendments to Gas Valuation Regulations for Indian Leases,'' (64 FR 43506) with an effective date of January 1, 2000. These regulations apply to all gas production from Indian (tribal or allotted) oil and gas leases (except leases on the Osage Indian Reservation). The new regulations resulted from a negotiated rulemaking among Indian tribes and allottees, the oil and gas industry, and MMS.

Among the newly adopted regulations was a provision at 30 CFR 206.174(l) requiring that for Indian leases in Montana and North Dakota, lessees must make adjustments to reported royalty values sooner, and MMS must complete its audits sooner, than either has done historically. This provision does not apply to Indian leases in other States.

The final rule limited the adjustment and audit period for Indian leases in Montana and North Dakota because, unlike most other producing regions, there are no acceptable published indexes applicable to that area (64 FR 43510). Accordingly, in areas such as Montana and North Dakota, valuation must be based on other criteria that are more difficult to determine than index prices.

After the final rule was promulgated, tribal auditors informed MMS that the special timing requirements at 30 CFR 206.174(l) could force tribal and MMS auditors to expend additional time and money or postpone ongoing audits in Montana and North Dakota to meet the restricted time periods. Moreover, MMS believes that the reason for only placing time limits on Indian leases in Montana and North Dakota is not compelling. Consequently, on June 15, 2000, MMS published a proposed rulemaking (65 FR 37504) to remove the requirements. The proposed rulemaking provided for a 30-day comment period that ended July 17, 2000.

II. Comments on Proposed Rule

During the comment period for the proposed rule, MMS received two written comments: one from an Indian tribe (tribe) and one from industry. After careful consideration of the comments, MMS has decided to issue this final rule removing the special timing requirements for adjustments and audits of royalties on gas produced from Indian leases in Montana and North Dakota. This amendment to the regulations will apply prospectively to gas produced on or after the effective date specified in the **DATES** section above.

General Comments

The industry commenter opposed the removal of the time limitations. The commenter believes that industry received the earlier valuation certainty in return for agreeing to an increase in the major portion calculation percentage to the 75th percentile. The commenter suggested that if MMS removes the adjustment and audit time limits then MMS should also change the major portion calculation to reflect the historical major portion value at the 50th percentile.

The tribal commenter supported the proposed amendments. As stated previously, the final rule limited the adjustment and audit period for Indian leases in Montana and North Dakota because there are no acceptable published indexes applicable to that area. The tribal commenter believes that the lack of such an index means that the determination of value will take more time, not less time, in the audit process.

Response. MMS and tribal auditors must retain the discretion to allocate audit resources to obtain the best data when that data becomes available. MMS believes that even without absolute time limits, industry is still afforded the certainty of a binding major portion value and no late-payment interest on any underpayment until that major portion value is due. Indian members of the Indian Negotiated Rulemaking Committee were unanimous in their belief that the median pricing methodology based on the 50th percentile did not accurately reflect the intent of lease terms. In exercising its trust responsibility to Indian lessors, MMS will continue to calculate the major portion value at the 75th percentile established in the August 1999 final rule.

Comments on Specific Issues

MMS specifically sought comment on whether there is a valid reason for differentiating between leases located in other States and leases in Montana and North Dakota when they both may be required to use the same valuation standards.

The tribal commenter pointed out that under the provisions of the gas regulations that allow other tribes and allottees to opt out of the applicable indexes, no time limits for audits, adjustments, and collection are imposed. The commenter stated that the result is unfair and disparate treatment for the Montana and North Dakota tribes.

The industry commenter recognized that the Indian lessors in Montana and North Dakota are being treated differently from those groups under the index-based valuation. The commenter offered two solutions to remedy the situation:

- Apply the restricted time limits to all Indian lessors; or
- Calculate major portion at the 50th percentile.

Response. MMS concludes that there is no valid reason for differentiating between leases located in Montana and North Dakota and leases located in other States when they both may be required to use the same valuation standards. Further, we believe the suggestions proffered by the industry commenter are not in the best interests of Indian lessors and consistent with the Secretary's trust responsibilities.

MMS also sought comments on whether the time limits on adjustment and audit could have a negative revenue impact on royalties collected from gas produced from Indian lands in Montana and North Dakota.

The tribal commenter believes that the reduced time periods place a significant burden on tribes that conduct their own audit program. It may require tribes to put aside, postpone or abandon ongoing audits of earlier periods to meet the new deadlines. The reduced time period may affect tribes' abilities to do a comprehensive and thorough audit or possibly any audit at all within the shortened time period. The commenter is also concerned that MMS valuation resources may be stretched too thin. The above factors together may result in less revenues to Indian lessors located in Montana and North Dakota.

Response. MMS agrees that the timing restrictions could hinder MMS and tribal audit efforts.

The tribal commenter suggests that paragraphs (2), (3) and (4) of 30 CFR 206.174 be removed as they would no longer be necessary if paragraph (1) is removed.

Response. This comment is a misunderstanding caused by typographical errors in the June 15, 2000, proposed rule (65 FR 37504) which replaced the lowercase ''L'' with a numerical ''1'' in many parts of the text. MMS is removing 30 CFR 206.174(l) (*i.e.,* lowercase ''L'') which includes paragraphs (1)–(4). MMS corrected these typographical errors in the July 7, 2000, **Federal Register** (65 FR 42064).

III. Procedural Matters

1. Summary Cost and Benefit Data.

The objective of this rule is to remove the special timing requirements for adjustments and audits of royalties on gas produced from Indian leases in Montana and North Dakota. We have summarized below the estimated costs and benefits of this rule to the three affected groups: Indian lessors in Montana and North Dakota, industry, and the Federal Government. The cost and benefit information in this Item 1 of Procedural Matters is used as the basis for the departmental certifications in Items 3–10.

A. Indian Lessors in Montana and North Dakota

We estimate that in 1997, through audits, MMS identified and collected unpaid revenues amounting to 2 percent of the total royalties paid for gas production on certain Indian leases located in Montana.

In 1999, payors submitted about $420,000 in royalties from gas produced from Indian leases in Montana and $49,000 in royalties from gas produced from Indian leases in North Dakota. Using 2 percent to calculate the additional audit revenues that may be expected for the 1999 sales year, MMS should collect an additional $8,400 from leases in Montana and $980 from leases in North Dakota. We conclude that if audits cannot be completed within one year of the royalty line adjustments timeframes, Indian lessors could potentially lose these uncollected revenues, plus applicable late payment interest, annually.

B. Industry

This rule will impose no new reporting burdens on industry. Industry will benefit from the final rule by being able to make adjustments to royalty lines beyond the current 1-year period. However, industry will pay an undetermined amount of additional interest on any underpayments discovered during audits that take longer than 1 year to complete.

Small Business Issues. Approximately 17 entities in Montana and 5 in North Dakota—most of which are small businesses because they employ 500 or less employees—pay royalties to MMS on gas produced from Indian leases. As discussed in A. above, these 22 entities collectively will pay less than $10,000 in uncollected royalties annually as a result of an extended adjustment and audit period. The average estimated impact would be $426 in uncollected royalties affecting about 4 percent of the small businesses reporting gas royalties for Indian leases. This rule benefits small tribes that would otherwise have to hire additional audit staff to handle the burden of performing both past and present audits concurrently. From this information, we conclude that this rule will not have a significant economic impact on a substantial number of small entities.

C. Federal Government

Removing the time limits on audit will help to ensure that Indian mineral lessors receive the maximum revenues from mineral resources on their land consistent with the Secretary's trust responsibility and lease terms.

D. Summary of Costs and Benefits to Affected Groups

Description (See corresponding narrative above)	<Cost>/Benefit Amount	
	First Year	Subsequent Years
Indian Lessors in Montana and North Dakota	$9,380 plus interest	$9,380 plus interest
Industry	<$9,380 plus interest>	<$9,380 plus interest>
Federal Government	−0−	−0−

2. Regulatory Planning and Review (E.O. 12866)

This document is not a significant rule and is not subject to review by the Office of Management and Budget under Executive Order 12866.

(1) This rule will not have an effect of $100 million or more on the economy. It will not adversely affect in a material way the economy, productivity, competition, jobs, the environment, public health or safety, or State, local, or tribal governments or communities.

(2) This rule will not create a serious inconsistency or otherwise interfere with an action taken or planned by another agency.

(3) This rule will not alter the budgetary effects or entitlements, grants, user fees, or loan programs or the rights or obligations of their recipients.

(4) This rule does not raise novel legal or policy issues.

3. The Regulatory Flexibility Act

The Department of the Interior certifies that this rule will not have a significant economic effect on a substantial number of small entities under the Regulatory Flexibility Act (5 U.S.C. 601 *et seq.*). See Small Business Issues in Item 1.B. above.

Your comments are important. The Small Business and Agricultural Regulatory Enforcement Ombudsman and 10 Regional Fairness Boards were established to receive comments from small businesses about Federal agency enforcement actions. The Ombudsman will annually evaluate the enforcement activities and rate each agency's responsiveness to small business. If you wish to comment on the enforcement actions in this rule, call 1–888–734–3247.

4. Small Business Regulatory Enforcement Act (SBREFA)

This rule is not a major rule under 5 U.S.C. 804(2), the Small Business Regulatory Enforcement Fairness Act. This rule:

a. Will not have an annual effect on the economy of $100 million or more.

b. Will not cause a major increase in costs or prices for consumers, individual industries, Federal, State, or local government agencies, or geographic regions.

c. Will not have significant adverse effects on competition, employment, investment, productivity, innovation, or the ability of U.S.-based enterprises to compete with foreign-based enterprises.

5. Unfunded Mandates Reform Act

This rule will not impose an unfunded mandate on State, local, or tribal governments or the private sector of more than $100 million per year. The rule will not have a significant or unique effect on State, local, or tribal governments or the private sector. A statement containing the information required by the Unfunded Mandates Reform Act (2 U.S.C. 1531 *et seq.*) is not required.

6. Takings (E.O. 12630)

Under Executive Order 12630, this proposed rule does not have significant takings implications. This rule does not impose conditions or limitations on the use of any private property; consequently, a takings implication assessment is not required.

7. Federalism (E.O. 13132)

Under Executive Order 13132, this proposed rule does not have Federalism implications. This rule does not substantially or directly affect the relationship between Federal and State governments or impose costs on States or localities.

8. Civil Justice Reform (E. O. 12988)

Under Executive Order 12988, the Office of the Solicitor has determined that this proposed rule will not unduly burden the judicial system and does meet the requirements of sections 3(a) and 3(b)(2) of the Order.

9. Paperwork Reduction Act of 1995

This rule does not contain an information collection, as defined by the Paperwork Reduction Act, and the submission of Office of Management and Budget Form 83–I is not required.

10. National Environmental Policy Act

This rule does not constitute a major Federal action significantly affecting the quality of the human environment. A detailed statement under the National Environmental Policy Act of 1969 is not required.

List of Subjects in 30 CFR 206

Coal, Continental shelf, Geothermal energy, Government contracts, Indians—lands, Mineral royalties, Natural gas, Petroleum, Public lands—mineral resources, Reporting and recordkeeping requirements.

Dated: October 10, 2000.

Sylvia V. Baca,

Assistant Secretary, Land and Minerals Management.

For reasons stated in the preamble, MMS amends part 206 as follows:

PART 206—PRODUCT VALUATION

1. The authority citation for part 206 continues to read as follows:

Authority: 5 U.S.C. 301 *et seq.*; 25 U.S.C. 396 *et seq.*, 396a *et seq.*, 2101 *et seq.*; 30 U.S.C. 181 *et seq.*, 351 *et seq.*, 1001 *et seq.*, 1701 *et seq.*; 31 U.S.C. 9701; 43 U.S.C. 1301 *et seq.*, 1331 *et seq.*, 1801 *et seq.*

§ 206.174 [Amended]

2. In § 206.174, remove paragraph (l).

[FR Doc. 00–26932 Filed 10–18–00; 8:45 am]

BILLING CODE 4310–MR–P

DEPARTMENT OF DEFENSE

Department of the Navy

32 CFR Part 706

Certifications and Exemptions Under the International Regulations for Preventing Collisions at Sea, 1972

AGENCY: Department of the Navy, DOD.

ACTION: Final rule.

SUMMARY: The Department of the Navy is amending its certifications and exemptions under the International Regulations for Preventing Collisions at Sea, 1972 (72 COLREGS), to reflect that the Deputy Assistant Judge Advocate General of the Navy (Admiralty and Maritime Law) has determined that USS *Mitscher* (DDG 57) is a vessel of the Navy which, due to its special construction and purpose, cannot fully comply with certain provisions of the 72 COLREGS without interfering with its special function as a naval ship. The intended effect of this rule is to warn mariners in waters where 72 COLREGS apply.

EFFECTIVE DATE: November 9, 1999.

FOR FURTHER INFORMATION CONTACT: Lieutenant Commander Gregg A. Cervi, JAGC, U.S. Navy Admiralty Counsel, Office of the Judge Advocate General, Navy Department, Washington Navy Yard, Washington, DC 20374–5066; Telephone number: (202) 685–5040.

SUPPLEMENTARY INFORMATION: Pursuant to the authority granted in 33 U.S.C. 1605, the Department of the Navy amends 32 CFR part 706. This amendment provides notice that the Deputy Assistant Judge Advocate General of the Navy (Admiralty and Maritime Law), under authority delegated by the Secretary of the Navy, has certified that USS *Mitscher* (DDG 57) is a vessel of the Navy which, due to its special construction and purpose, cannot fully comply with the following specific provisions of 72 COLREGS without interfering with its special function as a naval ship: Annex I paragraph 3(a) pertaining to the location of the forward masthead light in the forward quarter of the vessel, and the horizontal distance between the forward and after masthead lights. The Deputy Assistant Judge Advocate General of the Navy (Admiralty and Maritime Law) has also certified that the lights involved are located in closest possible compliance with the applicable 72 COLREGS requirements.

Moreover, it has been determined, in accordance with 32 CFR parts 296 and 701, that publication of this amendment for public comment prior to adoption is impracticable, unnecessary, and contrary to public interest since it is based on technical findings that the placement of lights on this vessel in a manner differently from that prescribed herein will adversely affect the vessel's ability to perform its military functions.

List of Subjects in 32 CFR part 706

Marine safety, Navigation (water), and Vessels.

Accordingly, 32 CFR part 706 is amended as follows:

PART 706—[AMENDED]

1. The authority citation for 32 CFR part 706 continues to read as follows:

Authority: 33 U.S.C. 1605.

2. Table Five of § 706.2 is amended by revising the entry for USS *Mitscher* to read as follows:

§ 706.2 Certifications of the Secretary of the Navy under Executive Order 11964 and 33 U.S.C. 1605.

* * * * *

TABLE FIVE

Vessel	Number	Masthead lights not over all other lights and obstructions. annex I, sec. 2(f)	Forward masthead light not in forward quarter of ship. annex I, sec. 3(a)	After masthead light less than ½ ship's length aft of forward masthead light. annex I, sec. 3(a)	Percentage horizontal separation attained
* *	*	*	*	*	*
USS Mitscher	DDG 57	X	X	X	19.8
* *	*	*	*	*	*

Dated: November 9, 1999.

Approved:

G.A. Cervi,

Lieutenant Commander, JAGC, U.S. Navy, Deputy Assistant Judge Advocate, General (Admiralty and Maritime Law).

Editorial Note: This document was received at the Office of the Federal Register October 6, 2000.

[FR Doc. 00–26263 Filed 10–18–00; 8:45 am]

BILLING CODE 3810–FF–P

DEPARTMENT OF DEFENSE

Department of the Navy

32 CFR Part 724

RIN 0703–AA64

Naval Discharge Review Board

AGENCY: Department of the Navy, DOD.

ACTION: Final Rule.

SUMMARY: This amendment reflects administrative changes made to the Department of the Navy's Naval Discharge Review Board regulations.

DATES: Effective October 19, 2000.

ADDRESSES: Office of the Judge Advocate General (Code 13), 1322 Patterson Ave. SE, Suite 3000, Washington Navy Yard, DC 20374–5066.

FOR FURTHER INFORMATION CONTACT: Roger Claussen, Legal Advisor, Naval Council of Personnel Boards, 720 Kennon Street, SE, Room 309, Washington Navy Yard, DC 20374–5023. Phone: (202) 685–6399.

SUPPLEMENTARY INFORMATION: Pursuant to the authority cited below, the Department of the Navy amends 32 CFR part 724. This amendment provides notice that the Department of the Navy has made administrative changes to the Naval Discharge Review Board regulations. These changes are found in subparts A and B and reflect updated references, removal of a redundant information, a change in the number of days an applicant has to submit documents to the Board after notification that certain documents are unavailable to the Board from 30 to 60 days, and other administrative changes. It has been determined that invitation of public comment on this amendment would be impracticable and unnecessary, and it is therefore not required under the public rulemaking provisions of 32 CFR Part 336 or Secretary of the Navy Instruction 5720.45. Interested persons, however, are invited to comment in writing on this amendment. All written comments received will be considered in making subsequent amendments or revisions of 32 CFR Part 724, or the instructions on which they are based. Changes may be initiated on the basis of comments received. Written comments should be addressed to Roger Claussen, Legal Advisor, Naval Council of Personnel Boards, 720 Kennon Street, SE, Room 309, Washington Navy Yard, DC 20374–5023. Phone: (202) 685–6399. It has been determined that this final rule is not a ''significant regulatory action'' as defined in Executive Order 12866.

Executive Order 13132, Federalism

It has been determined that this rule does not have sufficient Federalism implications to warrant the preparation of a Federalism Assessment. The

provisions contained in this rule will have little or no direct effect on States or local governments.

Regulatory Flexibility Act

This rule will not have a significant economic impact on a substantial number of small entities for purposes of the Regulatory Flexibility Act (5 U.S.C. Chapter 6).

Paperwork Reduction Act

This rule does not impose collection of information requirements for purposes of the Paperwork Reduction Act (44 U.S.C. Chapter 35, 5 CFR Part 1320).

List of Subjects in 32 CFR Part 724

Administrative pracatice and procedure, Archives and records, Court-martial, Military personnel, Naval discharge.

For the reasons set forth in the preamble, amend part 724 of title 32 of the Code of Federal Regulations as follows:

PART 724—NAVAL DISCHARGE REVIEW BOARD

1. The authority citation for 32 CFR part 724 continues to read as follows:

Authority: 5 U.S.C. 301; 10 U.S.C. 1553.

PART 724—[AMENDED]

2. In 32 CFR part 724, revise all references to ''he'' to read ''he/she'', and revise all references to ''his'' to read ''his/her''.

3. Revise 32 CFR 724.108, as follows:

§ 724.108 Administrative discharge.

A discharge upon expiration of enlistment or required period of service, or prior thereto, in a manner prescribed by the Commandant of the Marine Corps or the Commander, Naval Personnel Command, but specifically excluding separation by sentence of a general court-martial.

4–5. In 32 CFR 724.109, revise paragraph (a)(4)(ii) as follows:

§ 724.109 Types of administrative discharges.

(a) * * *

(4) * * *

(ii) With respect to administrative matters outside the administrative separation system that require a characterization of service as Honorable or General, an Entry Level Separation shall be treated as the required characterization. An Entry Level Separation for a member of a Reserve component separated from the Delayed Entry Program is under honorable conditions.

* * * * *

§ 724.201 [Amended]

5. In 32 CFR 724.201, remove the words ''SECNAVINST 5430.7L'' and add, in their place, the words ''SECNAVINST 5730.7 series'', and remove the words ''SECNAVINST 5420.135C'' and add, in their place, the words ''SECNAVINST 5420.135 series''.

§ 724.210 [Amended]

6. In 32 CFR 724.210(a)(2), remove the number ''30'' and add, in its place, the number ''60''.

§ 724.212 [Amended]

7. In 32 CFR 724.212, remove and reserve paragraph (c).

Dated: September 29, 2000.

C.G. Carlson,

U.S. Marine Corps, Alternate Federal Register Liaison Officer.

[FR Doc. 00–25986 Filed 10–18–00; 8:45 am]

BILLING CODE 3810–01–P

DEPARTMENT OF DEFENSE

Department of the Navy

32 CFR Part 733

RIN 0703–AA66

Assistance to and Support of Dependants; Paternity Complaints

AGENCY: Department of the Navy, DOD.

ACTION: Final rule.

SUMMARY: The Department of the Navy is updating its regulation on assistance to and support of dependents and paternity complaints. Significant changes were made to Marine Corps specific provisions to reflect the language found in the Marine Corps Legal Administration Manual. Other changes reflect administrative and nomenclature changes.

DATES: Effective October 19, 2000.

ADDRESSES: Office of the Judge Advocate General (Code 13), 1322 Patterson Ave SE, Suite 3000, Washington Navy Yard, DC 20374–5066.

FOR FURTHER INFORMATION CONTACT: Lieutenant Commander James L. Roth, JAGC, U.S. Navy, Head, Regulations and Legislation Branch, Administrative Law Division, Office of the Judge Advocate General (Code 13), 1322 Patterson Ave SE, Suite 3000, Washington Navy Yard, DC 20374–5066, (703) 604–8200.

SUPPLEMENTARY INFORMATION: Pursuant to the authority cited below, the Department of the Navy amends 32 CFR Part 733. This amendment provides notice that significant changes were made in sections 733.3 and 733.4 to paragraphs applicable to the Marine Corps to reflect language found in the Marine Corps Legal Administration Manual (MCO 5800.16A (LEGADMINMAN)). Additionally, throughout Part 733 the term ''basic allowance for quarters'' was changed to ''basic allowance for housing'', as well as other administrative changes. It has been determined that invitation of public comment on this amendment would be impracticable and unnecessary, and it is therefore not required under the public rulemaking provisions of 32 CFR Part 336 or Secretary of the Navy Instruction 5720.45. Interested persons, however, are invited to comment in writing on this amendment. All written comments received will be considered in making subsequent amendments or revisions of 32 CFR Part 733, or the instructions on which they are based. Changes may be initiated on the basis of comments received. Written comments should be addressed to Lieutenant Commander James L. Roth, JAGC, U.S. Navy, Head, Regulations and Legislation Branch, Administrative Law Division, Office of the Judge Advocate General (Code 13), 1322 Patterson Ave SE, Suite 3000, Washington Navy Yard, DC 20374–5066. It has been determined that this final rule is not a ''significant regulatory action'' as defined in Executive Order 12866.

Executive Order 13132, Federalism

It has been determined that this rule does not have sufficient Federalism implications to warrant the preparation of a Federalism Assessment. The provisions contained in this rule will have little or no direct effect on States or local governments.

Regulatory Flexibility Act

This rule will not have a significant economic impact on a substantial number of small entities for purposes of the Regulatory Flexibility Act (5 U.S.C. Chapter 6).

Paperwork Reduction Act

This rule does not impose collection of information requirements for purposes of the Paperwork Reduction Act (44 U.S.C. Chapter 35, 5 CFR Part 1320).

List of Subjects in 32 CFR Part 733

Alimony, Child support, Housing, Marital status, Military personnel.

For the reasons set forth in the preamble, amend part 733 of title 32 of the Code of Federal Regulations as follows:

PART 733—ASSISTANCE TO AND SUPPORT OF DEPENDENTS; PATERNITY COMPLAINTS

1. The authority citation for 32 CFR part 733 is revised to read as follows:

Authority: 5 U.S.C. 301; 10 U.S.C. 5013; 37 U.S.C. 101, 401, 403; 50 U.S.C. App. 2210; E.O. 11157, 29 FR 7973, 3 CFR 1964 Supp. p. 139, as amended.

§ 733.1 [Amended]

2. In § 733.1, remove the words ''basic allowance for quarters'' and add, in their place, the words ''basic allowance for housing (BAH)'' in the section heading.

§§ 733.1, 733.2, and 733.3 [Amended]

3. In addition to the amendments set forth above, in 32 CFR 733 remove the words ''basic allowance for quarters'' and add, in their place, the word ''BAH'' in the following places:

a. Section 733.1(a).

b. Section 733.2.

4. Amend § 733.3 as follows:

a. In paragraph (a)(2), revise the sixth sentence.

b. Redesignate paragraph (a)(2)(i) as paragraph (b) and revise it.

c. Add a new paragraph (c).

The revisions and addition read as follows:

§ 733.3 Information and policy on support of dependents.

(a) * * *

(2) * * * The support scales set forth in paragraphs (b) and (c) of this section are not intended as a fixed rule.

* * * * *

(b) *Navy members.* (1) The amount of support to be provided in the absence of a mutual agreement or court order is as follows:

For spouse only—⅓ gross pay
For spouse and one minor child—½ gross pay
For spouse and two or more children—⅗ gross pay
For one minor child—⅙ gross pay
For two minor children—¼ gross pay
For three or more children—⅓ gross pay

(2) For purposes of this support guide, gross pay will include basic pay and BAH, but does not include hazardous duty pay, sea or foreign duty pay, incentive pay, or basic allowance for subsistence.

(c) *Marine Corps members.* (See MCO 5800.16A, Marine Corps Manual for Legal Administration (LEGADMINMAN))

(1) In the absence of a court order or a written agreement between the parties as to an amount of support to be furnished by the Marine, the following shall apply to establish interim support requirements. Note that gross pay is defined as basic pay and BAH, but does not include hazardous duty pay, incentive pay, or basic allowance for subsistence.

(2) *Single family.* (i) For a single family living in Government housing (civilian spouse): interim support shall be $200.00 per supported person, up to a maximum of ⅓ gross pay, per month.

(ii) For a single family not living in Government housing (civilian spouse): interim support shall be either $200.00 per supported family member, or BAH at the ''with dependents'' rate, whichever is greater, up to a maximum of ⅓ gross pay, per month.

(3) *Multiple families (not including a spouse in the armed forces).* Interim support for each family member shall be either $200.00 per supported family member, or the pro rata share of BAH at the ''with dependents'' rate, whichever is greater, up to a maximum of ⅓ gross pay, per month.

(4) *Both spouses in the armed forces.* (i) No children of the marriage: no support obligation, regardless of any disparities in pay grade.

(ii) All the children of the marriage in the custody of one spouse: interim support shall be either $200.00 per supported child, or BAH at the ''with dependents'' rate, whichever is greater, up to a maximum of ⅓ gross pay, per month.

(iii) If custody of children of the marriage is divided between the two parents: interim support shall be either $200.00 per supported family member, or the pro rata share of BAH at the ''with dependents'' rate, whichever is greater, up to a maximum of ⅓ gross pay, per month.

(5) Support amounts required pursuant to this section will be paid until a court order or written agreement is obtained.

(6) Form and timing of financial support payments

(i) Unless otherwise required by court order or by written financial support agreement, a financial support payment will be made in one of the following ways:

(A) Check.
(B) Money order.
(C) Electronic transfer.
(D) Voluntary allotment.
(E) Cash.
(F) Involuntary allotment.
(G) Garnishment.

(ii) As an exception to paragraph 15002.6a of the LEGADMINMAN, a commanding officer may direct compliance with the financial support requirements of this section by making in-kind financial support. For example, paying non-Government housing expenses on behalf of family members, automobile loans, or charge accounts.

(7) *Alimony and child support.* (i) Dependents for whom BAH or other allowances are payable are defined by law. For purposes of qualifying for BAH, medical care, or other benefits, a former spouse is not a dependent even though alimony has been decreed. Marines are expected to comply with the terms of court orders which adjudge alimony payments (even though BAH is not payable) until the responsibility for compliance is terminated by a court of competent jurisdiction; a written agreement between the persons concerned; relinquishment by the former spouse in writing; or the waiver of the support requirement is granted by the general court-martial (GCM) authority in writing.

(ii) If the decree is silent as to alimony payments, it is presumed that the court did not intend such payments.

(iii) When a valid court order exists and the Marine concerned is financially unable to comply, the Marine will be advised that noncompliance with the terms of that order renders the Marine liable to further civil court action.

(iv) The duty of Marines to support their minor children is not terminated by desertion or other misconduct on the part of the Marine's spouse. Similarly, the obligation to support a child or children is not eliminated or reduced by the dissolution of the marriage through divorce, unless a judicial decree or order specifically negates the obligation of child support. The fact that a divorce decree is silent relative to support of minor children, or does not mention a child or children, will not be interpreted by command authorities as relieving the Marine of the inherent obligation to provide support for the child or children of the marriage.

(v) A commanding officer may consider releasing a Marine under his/her command from the specific requirements of this regulation in the situations described below. A commanding officer may reconsider any prior decision made by himself/herself or by a prior commanding officer:

(A) When the Marine cannot determine the whereabouts and welfare of the child concerned;

(B) When it is apparent that the person requesting support for the child does not have physical custody of the child;

(C) When the Marine has been the victim of a substantiated instance of physical abuse (this section applies only to a requirement to support a spouse, not dependent children. Commanding officers are strongly encouraged to

consult the installation family counseling center concerning such issues. In addition, commanders should exercise extreme caution in denying dependent support in cases where the servicemember is also a perpetrator of spousal abuse.); or

(D) The dependent is in jail.

(vi) All command directed support waivers shall be in writing and a copy shall be provided to the disenfranchised family member by the command. The command shall also retain a copy. Alleged verbal support waivers shall be given no force or effect.

(vii) The natural parents of an adopted child are relieved of the obligation to support the child as such duty is imposed on the adoptive parent. A Marine who contemplates the adoption of a child should be aware of the legal obligation to provide continuous support, once adopted, for such child during its minority.

5. In § 733.4, revise paragraph (a)(1) to read as follows:

§ 733.4 Complaints of nonsupport and insufficient support of dependents.

(a) * * *

(1) *Waiver of support of spouse.* If the member feels that he or she has legitimate grounds for a waiver of support for the spouse, the Director, Navy Family Allowance Activity or in the case of a member of the U.S. Marine Corps, the general court-martial convening authority, may grant such a waiver for support of a spouse (but not children) on the basis of evidence of desertion without cause or infidelity on the part of the spouse. The evidence may consist of—

(i) *U.S. Navy members.* An affidavit of the service member, relative, disinterested person, public official, or law enforcement officer, and written admissions by the spouse contained in letters written by that spouse to the service member or other persons. However, affidavits of the service member and relatives should be supported by other corroborative evidence. All affidavits must be based upon the personal knowledge of the facts set forth; statements of hearsay, opinion, and conclusion are not acceptable as evidence.

(ii) *U.S. Marine Corps members.* The Marine's commander may consider all pertinent facts and circumstances. The general court-martial convening authority my consider any reliable evidence including, but not necessarily limited to, the following: affidavits of the Marine, relatives, or other witnesses; admissions of the spouse, including verbal and written statements or letters written by the spouse to the Marine or other persons; pertinent photographs or court orders; and admissions by the person with whom the spouse allegedly had sexual liaisons. Witness statements should ordinarily state facts that were personally observed. Statements that merely state a conclusion without providing the personal observations on which the conclusion is based are generally unpersuasive.

(iii) The request for waiver of support of a spouse should be submitted to the Director, Navy Family Allowance Activity or in the case of a member of the U.S. Marine Corps, the general court-martial convening authority, with a complete statement of the facts and substantiating evidence, and comments or recommendations of the commanding officer.

* * * * *

§ 733.5 [Amended]

6. In § 733.5, remove the next to last sentence in paragraph (b) introductory text.

Dated: October 10, 2000.

C.G. Carlson,

Major, U.S. Marine Corps, Alternate Federal Register Liaison Officer.

[FR Doc. 00–26793 Filed 10–18–00; 8:45 am]

BILLING CODE 3810–FF–U

DEPARTMENT OF DEFENSE

Department of the Navy

32 CFR Part 734

RIN 0703–AA67

Garnishment of Pay of Naval Military and Civilian Personnel for Collection of Child Support and Alimony

AGENCY: Department of the Navy, DOD.

ACTION: Final rule.

SUMMARY: The Department of the Navy is updating its regulation on garnishment of pay of naval military and civilian personnel for collection of child support and alimony. This amendment reflects changes to the Marine Corps provision on receipt of legal process and other administrative changes.

DATES: Effective October 19, 2000.

ADDRESSES: Office of the Judge Advocate General (Code 13), 1322 Patterson Ave. SE., Suite 3000, Washington Navy Yard, DC 20374–5066.

FOR FURTHER INFORMATION CONTACT: Lieutenant Commander James L. Roth, JAGC, U.S. Navy, Head, Regulations and Legislation Branch, Administrative Law Division, Office of the Judge Advocate General (Code 13), 1322 Patterson Ave. SE., Suite 3000, Washington Navy Yard, DC 20374–5066, (703)604–8200.

SUPPLEMENTARY INFORMATION: Pursuant to the authority cited below, the Department of the Navy amends 32 CFR Part 734. This amendment updates information on legal process brought against a Marine Corps member for the enforcement of a legal obligation to provide child support or alimony payments. Additionally, administrative changes were made to change reference to ''Marine Corps Manual'' to ''MCO 5800.16A, Marine Corps Manual on Legal Administration (LEGADMINMAN)'' on order to more accurately describe the manual. It has been determined that invitation of public comment on this amendment would be impracticable and unnecessary, and it is therefore not required under the public rulemaking provisions of 32 CFR Part 336 or Secretary of the Navy Instruction 5720.45. Interested persons, however, are invited to comment in writing on this amendment. All written comments received will be considered in making subsequent amendments or revisions of 32 CFR Part 734, or the instructions on which they are based. Changes may be initiated on the basis of comments received. Written comments should be addressed to Lieutenant Commander James L. Roth, JAGC, U.S. Navy, Head, Regulations and Legislation Branch, Administrative Law Division, Office of the Judge Advocate General (Code 13), 1322 Patterson Ave. SE., Suite 3000, Washington Navy Yard, DC 20374–5066. It has been determined that this final rule is not a ''significant regulatory action'' as defined in Executive Order 12866.

Executive Order 13132, Federalism

It has been determined that this rule does not have sufficient Federalism implications to warrant the preparation of a Federalism Assessment. The provisions contained in this rule will have little or no direct effect on States or local governments.

Regulatory Flexibility Act

This rule will not have a significant economic impact on a substantial number of small entities for purposes of the Regulatory Flexibility Act (5 U.S.C. Chapter 6).

Paperwork Reduction Act

This rule does not impose collection of information requirements for purposes of the Paperwork Reduction Act (44 U.S.C. Chapter 35, 5 CFR Part 1320).

List of Subjects in 32 CFR Part 734

Alimony, Child support, Military personnel.

For the reasons set forth in the preamble, amend part 734 of title 32 of the Code of Federal Regulations as follows:

PART 734—GARNISHMENT OF PAY OF NAVAL MILITARY AND CIVILIAN PERSONNEL FOR COLLECTION OF CHILD SUPPORT AND ALIMONY

1. The authority citation for 32 CFR part 734 continues to read as follows:

Authority: 42 U.S.C. 659 (Social Security Act, sec. 459 added by Pub. L. 93–647, part B, sec. 101(a), 88 Stat. 2357, as amended by the Tax Reform and Simplification Act of 1977, Pub. L. 95–30, title V, sec. 502, 91 Stat. 157).

2. In § 734.3, revise paragraph (a)(2) to read as follows:

§ 734.3 Service of Process.

(a) * * *

(2) *Marine Corps members.* 42 U.S.C. 659 provides that pay of a servicemember, active duty or retired, shall be subject to legal process brought for the enforcement against such member of legal obligations to provide child support or alimony payments. ''Legal process'' means any writ, order, summons, or other similar process in the nature of garnishment. Upon receipt of such legal process, it will be forwarded directly to: Defense Finance and Accounting Service, Cleveland Center, Garnishment Operations Directorate (DFAS–CL/L), P.O. Box 998002, Cleveland, Ohio 44199–8002. The letter of transmittal will state the date of service and method by which service was made. Detailed instructions for disbursing officers and commanding officers are contained in DFAS–KC 7220.31–R, chapter 7.

* * * * *

§§ 734.4 and 734.5 [Amended]

3. In 32 CFR part 734, remove the words ''Marine Corps Manual'' and add, in their place, the words ''MCO 5800.16A, Marine Corps Manual for Legal Administration (LEGADMINMAN)'' in the following places:

a. Section 734.4(a)(3).

b. Section 734.5.

Dated: October 10, 2000.

C.G. Carlson,

Major, U.S. Marine Corps, Alternate Federal Register Liaison Officer.

[FR Doc. 00–26791 Filed 10–18–00; 8:45 am]

BILLING CODE 3810–FF–U

DEPARTMENT OF DEFENSE

Department of the Navy

32 CFR Part 765

RIN 0703–AA69

Rules Applicable to the Public

AGENCY: Department of the Navy, DOD.

ACTION: Final rule.

SUMMARY: This rule sets forth amendments on the rules applicable to the public. It is intended that this amendment will apprise members of the public of updated information on the redelegated authority to grant written permission to use the United States Marine Corps emblem, names, or initials and on changes to the mileage allowances on rewards for the return of Navy and Marine Corps absentees.

DATES: Effective October 19, 2000.

ADDRESSES: Office of the Judge Advocate General (Code 13), 1322 Patterson Ave SE, Suite 3000, Washington Navy Yard, DC 20374–5066.

FOR FURTHER INFORMATION CONTACT: Lieutenant Commander James L. Roth, JAGC, USN, Head, Regulations and Legislation, FOIA/PA Branch, Administrative Law Division, Office of the Judge Advocate General (Code 13), 1322 Patterson Ave SE, Suite 3000, Washington Navy Yard, DC 20374–5066, (703) 604–8200.

SUPPLEMENTARY INFORMATION: Pursuant to the authority cited below, the Department of the Navy amends 32 CFR Part 765. As part of our annual review of 32 CFR we identified a need to update information found at Part 765 concerning mileage allowances as part of the rewards for return of Navy and Marine Corps absentees and on the redelegated authority to grant written authority to use the emblem, names, and use of the United States Marine Corps. This rule is being published by the Department of the Navy for guidance and interest of the public in accordance with 5 U.S.C. 552(a)(1). It has been determined that invitation of public comment on this amendment would be impracticable and unnecessary, and it is therefore not required under the public rulemaking provisions of 32 CFR Part 336 or Secretary of the Navy Instruction 5720.45. Interested persons, however, are invited to comment in writing on this amendment. All written comments received will be considered in making subsequent amendments or revisions of 32 CFR Part 765, or the instructions on which they are based. Changes may be initiated on the basis of comments received. Written comments should be addressed to Lieutenant Commander James L. Roth, JAGC, USN, Head, Regulations and Legislation, FOIA/PA Branch, Administrative Law Division, Office of the Judge Advocate General (Code 13), 1322 Patterson Ave SE, Suite 3000, Washington Navy Yard, DC 20374–5066. It has been determined that this final rule is not a ''significant regulatory action'' as defined in Executive Order 12866.

Executive Order 13132, Federalism

It has been determined that this rule does not have sufficient Federalism implications to warrant the preparation of a Federalism Assessment. The provisions contained in this rule will have little or no direct effect on States or local governments.

Regulatory Flexibility Act

This rule will not have a significant economic impact on a substantial number of small entities for purposes of the Regulatory Flexibility Act (5 U.S.C. Chapter 6).

Paperwork Reduction Act

This rule does not impose collection of information requirements for purposes of the Paperwork Reduction Act (44 U.S.C. Chapter 35, 5 CFR Part 1320).

List of Subjects in 32 CFR Part 765

Reward, Seals and insignia.

For the reasons set forth in the preamble, the Department of the Navy amends 32 CFR Part 765 as follows:

PART 765—RULES APPLICABLE TO THE PUBLIC

1. The authority citation for part 765 continues to read as follows:

Authority: Secs. 5031, 6011, 70A Stat. 278, 375, as amended, sec. 133, 76 Stat. 517, sec. 301, 80 Stat. 379; 5 U.S.C. 301, 10 U.S.C. 133, 5031, 6011, 7881.

§ 765.14 [Amended]

2. In 32 CFR 765.14(d)(2) and (3), remove the term ''Director of Headquarters Support (CMC(HQSP))'' and add its place, the term ''Director, Administration Resource Management (ARDE)'' and remove the term ''CMC (HQSP)'' and add in its place the term ''CMC (ARDE)''.

Dated: October 10, 2000.

C. G. Carlson,

Major, U.S. Marine Corps, Alternate Federal Register Liaison Officer.

[FR Doc. 00–26792 Filed 10–18–00; 8:45 am]

BILLING CODE 3810–FF–P

ENVIRONMENTAL PROTECTION AGENCY

40 CFR Part 52

[CT058–7217a; A–1–FRL–6886–5]

Approval and Promulgation of Air Quality Implementation Plans; Connecticut; Changes to Various VOC Regulations

AGENCY: Environmental Protection Agency (EPA).

ACTION: Direct final rule.

SUMMARY: EPA is approving several revisions to the Connecticut (CT) State Implementation Plan (SIP). The revisions being approved consist of changes to various volatile organic compound (VOC) regulations that are currently in the CT SIP. These changes include: revisions to the definition of VOC; revisions to the gasoline loading regulation; revisions to the metal cleaning regulation; revisions to the miscellaneous metal parts and products coating regulation; and revisions to CT's ''reasonably available control technology (RACT) for volatile organic compounds'' regulation. Additionally, EPA is approving CT's negative declarations for the synthetic organic chemical manufacturing industry (SOCMI) distillation and reactor vessel source categories for which EPA issued control technique guideline documents (CTGs).

The intended effect of this action is to approve these revisions to the SIP in accordance with sections 110 and 182(b)(2) of the Clean Air Act (CAA).

DATES: This direct final rule is effective on December 18, 2000 without further notice, unless EPA receives relevant adverse comment by November 20, 2000. If relevant adverse comment is received, EPA will publish a timely withdrawal of the direct final rule in the **Federal Register** and inform the public that the rule will not take effect.

ADDRESSES: Comments may be mailed to David Conroy, Unit Manager, Air Quality Planning, Office of Ecosystem Protection (mail code CAQ), U.S. Environmental Protection Agency, EPA-New England, One Congress Street, Suite 1100, Boston, MA 02114–2023. Copies of the documents relevant to this action are available for public inspection during normal business hours, by appointment at the Office Ecosytem Protection, U.S. Environmental Protection Agency, Region I, One Congress Street, 11th floor, Boston, MA and the Bureau of Air Management, Department of Environmental Protection, State Office Building, 79 Elm Street, Hartford, CT 06106–1630.

FOR FURTHER INFORMATION CONTACT: Anne E. Arnold at 617–918–1047.

SUPPLEMENTARY INFORMATION: The following questions will be covered in this section:

A. What action is EPA taking?

B. What air pollutants are reduced by the changes to Connecticut's regulations?

C. Who is affected by today's action?

D. Where do the changes to the regulations apply?

E. When does today's action take effect?

F. What is ''reasonably available control technology,'' or RACT?

1. What is EPA's recommended VOC RACT for Miscellaneous Metal Parts and Products Coatings?

2. Do the Changes to Connecticut's VOC RACT for Miscellaneous Metal Parts and Products Coatings Meet EPA Guidance?

G. Why is EPA promulgating a full approval of the changes to subsections 22a–174–1, 22a–174–20(b), 22a–174–20(l), 22a–174–20(s) and section 22a–174–32?

H. Where to go for more information on the changes to Connecticut's regulations?

I. What does ''direct final rulemaking'' mean?

A. What Action Is EPA Taking?

EPA is approving State Implementation Plan (SIP) revisions submitted by the State of Connecticut (CT). This action revises various volatile organic compound (VOC) regulations that are currently in the CT SIP. EPA is fully approving the following sections of the regulations of the State of Connecticut as changes to CT's SIP: (1) revisions to the definition of VOC, section 22a–174–1(97); (2) revisions to the gasoline loading regulation, section 22a–174–20(b); (3) revisions to the metal cleaning regulation, section 22a–174–20(l); (4) revisions to the miscellaneous metal parts and products coating regulation, section 22a–174–20(s); and (5) revisions to CT's reasonably available control technology (RACT) for VOC regulation, section 22a–174–32.

In addition to the regulatory changes, EPA is also approving negative declarations submitted by CT for two post-1990 CTG categories. Specifically, EPA is approving CT's negative declarations for the synthetic organic chemical manufacturing industry (SOCMI) distillation and reactor vessel source categories for which EPA issued CTG documents in 1993. Section 182(b)(2)(A) of the Clean Air Act (CAA) requires states with ozone nonattainment areas to revise their SIPs to require RACT at facilities in each industrial category covered by a CTG that is issued by the Administrator between November 1990 and the date of attainment. Through the negative declaration, CT is asserting that there are no sources within the State that would be subject to a rule for these source categories. EPA is approving this negative declaration submittal as meeting the section 182(b)(2)(A) RACT requirements for these two source categories. However, if evidence is submitted by November 20, 2000 that there are existing sources within CT that, for purposes of meeting the RACT requirements, would be subject to a rule for these categories, if developed, such comments would be considered adverse and EPA would withdraw its approval action on the negative declarations.

Additionally, in order to meet the requirements of section 182(b)(2)(A), CT revised section 22a–174–32 to apply to facilities subject to the three other final CTGs issued by EPA since 1990, i.e., the wood furniture, shipbuilding and repair, and aerospace coating CTGs. The revised section 22a–174–32 explicitly applies to wood furniture manufacturing and aerospace manufacturing and rework facilities. And, although there is no explicit applicability provision for shipbuilding facilities, section 22a–174–32 was revised to apply now to all major stationary sources, which is consistent with the applicability of the final shipbuilding CTG, as explained further below.

B. What Air Pollutants Are Reduced by the Changes to Connecticut's Regulations?

The changes to CT's regulations reduce emissions of volatile organic compounds, or VOCs. Volatile organic compounds are certain types of hydrocarbons that are precursors to the type of air pollution known as ground level ozone, the main ingredient of smog. Ground-level ozone is formed by a chemical reaction between VOCs and oxides of nitrogen (NO_X) in the presence of sunlight. Therefore, the changes to CT's regulations will help reduce ground level ozone.

C. Who Is Affected by Today's Action?

Today's action approves changes to category-specific regulations that affect a variety of VOC-emitting industrial facilities. Section 22a–174–20(b) applies to gasoline and volatile organic liquid loading facilities. Section 22a–174–20(l) applies to facilities that clean or prepare metal surfaces. Section 22a–174–20(s)

applies to facilities that paint and coat certain kinds of metal parts and products.

Additionally, section 22a–174–32 is a general VOC RACT regulation that applies to all VOC emitting processes that are not already regulated by other VOC control regulations in the CT SIP. Today's action approves changes to the applicability of the earlier section 22a–174–32 requirements in order to include emissions from processes previously unregulated under the SIP such as: coating or painting wood products, coating or painting aerospace products, painting or refinishing commercial ships, storing volatile organic liquids, producing batch chemicals or pharmaceuticals, producing VOC-laden industrial wastewater and the coating of plastics.

D. Where Do the Changes to the Regulations Apply?

All of the regulations being considered are applicable across the state. However, the applicability of section 22a–174–32 varies depending on the location of the VOC-emitting facility. In the area of CT designated as serious nonattainment of the ozone standard, the regulation applies to facilities with the potential to emit 50 tons of VOC or more per year. This area covers all of the State with the exception of southwestern CT. In the southwestern portion of CT designated as severe nonattainment for ozone, the regulation applies to facilities with the potential to emit 25 tons of VOC or more per year.

Since the shipbuilding CTG applies to facilities with the potential to emit 50 tons of VOC or more per year, the applicability of section 22a–174–32 now covers any shipbuilding sources subject to EPA's CTG. Also, consistent with the aerospace and wood furniture manufacturing CTGs, section 22a–174–32 specifically applies to facilities with the potential to emit 25 tons of VOC or more per year regardless of location within the state.

E. When Does Today's Action Take Effect?

If EPA receives no relevant adverse comments during the 30-day public comment period that follows the publication of this notice, EPA approval action will be effective 60 days after the date of publication.

F. What Is ''Reasonably Available Control Technology,'' or RACT?

EPA defines RACT as the lowest emission limit that an existing polluting source is capable of meeting if it uses pollution control equipment and/or material or process changes that are reasonably available considering costs and current technology. For many VOC-emitting industrial categories, EPA has published control technique guidelines, or CTGs. CTGs analyze available control technologies and recommend emission limitations or technology standards that are considered economically feasible.

The changes being considered today to CT's definition of VOC, gasoline loading, and metal cleaning regulations do not affect the CTG-based RACT standards that are part of the existing regulations in CT. The changes being considered for CT's general VOC RACT regulation do not change the RACT norms established in the previous version of the regulation but do expand the applicability to cover additional facilities.

However, the changes being considered to CT's miscellaneous metal parts and products coating regulations define RACT for a new category of coatings, i.e., the ''high performance architectural aluminum coatings.''

1. What Is EPA's Recommended VOC RACT for Miscellaneous Metal Parts and Products Coatings?

In the CTG for miscellaneous metal parts and products, EPA recommended limits for the VOC quantity of various metal coatings. For the ''outdoor, harsh exposure, or extreme performance'' coatings, EPA recommended a RACT limit of 3.5 pounds of VOC per gallon of coating, minus water and exempt solvents, at a cost effectiveness of $6,841 or less per ton VOC removed. See EPA document number EPA–450/2–78–015 for more details.

2. Do the Changes to Connecticut's VOC RACT for Miscellaneous Metal Parts and Products Coatings Meet EPA Guidance?

The revisions to section 22a–174–20(s) are approvable. These revisions include a new definition of ''high performance architectural aluminum coating'' and a 6.3 lb VOC per gallon of coating emission limit for this type of coating. CT's alternative limit, which represents a relaxation from the EPA Control Technique Guideline limit of 3.5 lbs VOC per gallon of coating, only applies to a coating applicator that emits 3,333 lbs of VOC per month or less (approximately 20 tons per year) and was an existing source in CT on or before November 1, 1994. CT's revisions were proposed in August 1994 and were adopted and effective in the State of Connecticut on March 1, 1995.

At the time of CT's rulemaking, it was documented that compliant coatings (3.5 lb VOC per gallon of coating) were not available at that add-on controls that were estimated to cost in excess of $15,000 per ton of VOC removed were not considered cost-effective. In addition, as previously stated, CT's alternative limit only applies to coating applicators in use in CT prior to November 1994 and is limited to 20 tons per year per applicator. There are only two applicators in CT that meet these criteria. Therefore, only 40 tons of VOC per year could be emitted at the higher limit. Also, new sources of sufficient size would trigger a BACT (Best Available Control Technology) or LAER (Lowest Achievable Emission Rate) review under CT's new source review program for minor and major sources. Furthermore, examination of CT's 1996 periodic emissions inventory shows that the 40 tons represents only 2 percent of CT's approximately 1990 tons of VOC emissions per year from miscellaneous metal parts and products surface coating operations. EPA's Blue Book [1] allows for deviations from CTG recommendations by means of the ''5 percent rule'' (i.e., emission resulting from implementation of the state's alternative must be within 5 percent of emissions resulting from implementation of EPA's CTG-based model rule).

Also, section 193 of the Clean Air Act (*i.e.,* the General Savings Clause), requires that any regulation in effect before the date of the enactment of the Clean Air Act Amendments of 1990 in any non-attainment area may only be modified if the modification insures equivalent or greater reductions of the same pollutant. Although the changes to pre-1990 section 22a–174–20(s) represent a potential increase in emissions of 40 tons per year, the expanded applicability of section 22a–174–32 is projected to reduce emissions by more than 40 tons per year. Given the VOC reductions resulting from the regulatory changes being acted on at this time, CT meets the requirements of the Savings Clause of section 193 of the Act.

G. Why Is EPA Promulgating a Full Approval of the Changes to Subsections 22a–174–1, 22a–174–20(b), 22a–174–20(l), 22a–174–20(s) and Section 22a–174–32?

The revisions submitted for subsections 22a–174–1, 22a–174–20(b), 22a–174–20(l), 22a–174–20(s), and the negative declarations for SOCMI reactor and distillation processes, are consistent with EPA guidance and meet the requirements of the CAA. Therefore,

[1] ''Issues Relating to VOC Regulation Cutpoints, Deficiencies, and Deviations: Clarification to Appendix D of November 24, 1987 **Federal Register**'' (May 25, 1988)

EPA is fully approving these changes as revisions to the Connecticut SIP.

Section 22a–174–32 establishes four RACT options. Options (A) and (B) of section 22a–174–32(e)(1), in combination with 22a–174–32(e)(2) and (e)(3), are methods of achieving RACT by either: (A) operating a system to capture and control VOC emissions to reduce VOC emissions by at least 85 percent of uncontrolled emissions; or by (B) reducing VOC use and emissions by 80 percent through reformulation or process changes. Options (C) and (D) are methods of achieving RACT through the use of emission reduction credits or an alternative compliance plan.

Options (A) and (B) define approvable VOC RACT methods. Options (C) and (D), however, describe processes by which RACT can be defined, but do not define RACT. Connecticut must define explicitly, and have approved by EPA, RACT for all of those sources complying with section 22a–174–32 through Options (C) and (D).

On October 5, 2000, EPA received a letter from Connecticut identifying the facilities for which RACT orders had not yet been issued and will be under section 22a–174–32(e)(1)(C) or (D). They are:

1. Keeler and Long/PPG Architectural Finishes
2. Hitchcock Chair Co. Ltd.
3. Carlon Rubber Products
4. Danbury Pharmacal

Connecticut has not yet submitted any of the necessary single source SIP revisions. Connecticut must submit and EPA must approve single source SIP revisions for the four sources listed above.

Although EPA has not received the final single source SIP revisions for these four facilities, section 22a–174–32 is fully approvable. On November 7, 1996, EPA issued a policy memorandum entitled ''Approval Options for Generic RACT Rules Submitted to Meet the non-CTG VOC RACT Requirements and Certain NOX RACT Requirements,'' [2] which applies to section 22a–174–32. Generic RACT provisions are those portions of a regulation where the emission limit or technology standard is not specified in the rule, rather, the determination of a limit is to be made on a case-by-case basis. Under the Act, these case-specific RACT determinations must be submitted to EPA as revisions to a State's SIP. The generic RACT policy allows full approval of a State's non-CTG VOC RACT regulation which contains generic provisions if an analysis has been completed that demonstrates that the remaining case-specific VOC RACT determinations involve a de minimis level of VOC emissions.

In the case of Connecticut's section 22a–174–32, analysis has shown that the emissions remaining to be covered by the case-specific RACT determinations for the four facilities constitute less than 3.5% of Connecticut's base year non-CTG VOC RACT emissions. Under the generic RACT policy, such emissions can be considered to be de minimis. Given this analysis, section 22a–174–32, including the generic provisions, is fully approvable.

It is important to note that approval of this regulation under the generic RACT policy does not exempt any remaining miscellaneous sources from RACT; rather it is a de minimis deferral of the approval of the remaining case-by-case RACT determinations. This means that approval of section 22a–174–32 will not relieve the remaining sources of the obligation to develop, submit and implement RACT level controls. Similarly, approval will not relieve Connecticut of the obligation to ensure that all sources within the State comply with the VOC RACT requirements of the Act by adopting and implementing emission limitations or technology standards. In fact, approval of this regulation will serve to reinforce the requirement for the State to submit any remaining case-specific RACT determinations. Because section 22a–174–32 requires that non-CTG VOC RACT determinations be submitted to EPA for approval as SIP revisions, approval of the regulation will make the requirement to submit remaining non-CTG VOC RACT orders enforceable by EPA, as well as by citizens under section 304 of the Act.

H. Where to Go for More Information on the Changes to Connecticut's Regulations?

For a more detailed discussion of the changes to Connecticut's VOC RACT regulations and EPA's evaluation, you can refer to the technical support document, entitled, ''Technical Support Document—Connecticut—Changes to Various VOC Regulations,'' dated December 15, 1999 and the amendment to that document. For copies of the Technical Support Document, contact the EPA or the Connecticut Department of Environmental Protection at the addresses listed in the addresses section of this notice.

I. What Does ''Direct Final Rulemaking'' Mean?

Essentially, ''direct final rulemaking'' means that the EPA is publishing this rule without prior proposal because the Agency views this as a noncontroversial amendment and anticipates no adverse comments. However, in the proposed rules section of this **Federal Register** publication, EPA is publishing a separate document that will serve as the proposal to approve the SIP revision should relevant adverse comments be filed. This action will be effective December 18, 2000 without further notice unless the Agency receives relevant adverse comments by November 20, 2000. Please note that if EPA receives adverse comment on an amendment, paragraph, or section of this rule and if that provision may be severed from the remainder of the rule, EPA may adopt as final those provisions of the rule that are not the subject of an adverse comment.

If the EPA receives such comments, then EPA will publish a document withdrawing the final rule and informing the public that the rule will not take effect. All public comments received will then be addressed in a subsequent final rule based on the proposed rule. The EPA will not institute a second comment period. Parties interested in commenting should do so at this time. If no such comments are received, the public is advised that this rule will be effective on December 18, 2000 and no further action will be taken on the proposed rule.

II. Final Action

EPA is approving the SIP revisions concerning CT's changes to subsections 22a–174–1(97), 22a–174–20(b), 22a–174–20(l), 22a–174–20(s), and section 22a–174–32, as well as the negative declarations for SOCMI reactor and distillation processes CTG categories.

III. Administrative Requirements

Under Executive Order 12866 (58 FR 51735, October 4, 1993), this action is not a ''significant regulatory action'' and therefore is not subject to review by the Office of Management and Budget. This action merely approves state law as meeting Federal requirements and imposes no additional requirements beyond those imposed by state law. Accordingly, the Administrator certifies that this rule will not have a significant economic impact on a substantial number of small entities under the Regulatory Flexibility Act (5 U.S.C. 601 *et seq.*). Because this rule approves pre-existing requirements under state law and does not impose any additional

[2] November 7, 1996 memorandum from Sally Shaver, Director, Air Quality Strategies and Standards Division, Office of Air Quality Planning and Standards, to Air Program Directors, EPA Regional Offices.

enforceable duty beyond that required by state law, it does not contain any unfunded mandate or significantly or uniquely affect small governments, as described in the Unfunded Mandates Reform Act of 1995 (Public Law 104–4). For the same reason, this rule also does not significantly or uniquely affect the communities of tribal governments, as specified by Executive Order 13084 (63 FR 27655, May 10, 1998). This rule will not have substantial direct effects on the States, on the relationship between the national government and the States, or on the distribution of power and responsibilities among the various levels of government, as specified in Executive Order 13132 (64 FR 43255, August 10, 1999), because it merely approves a state rule implementing a Federal standard, and does not alter the relationship or the distribution of power and responsibilities established in the Clean Air Act. This rule also is not subject to Executive Order 13045 (62 FR 19885, April 23, 1997), because it is not economically significant.

In reviewing SIP submissions, EPA's role is to approve state choices, provided that they meet the criteria of the Clean Air Act. In this context, in the absence of a prior existing requirement for the State to use voluntary consensus standards (VCS), EPA has no authority to disapprove a SIP submission for failure to use VCS. It would thus be inconsistent with applicable law for EPA, when it reviews a SIP submission, to use VCS in place of a SIP submission that otherwise satisfies the provisions of the Clean Air Act. Thus, the requirements of section 12(d) of the National Technology Transfer and Advancement Act of 1995 (15 U.S.C. 272 note) do not apply. As required by section 3 of Executive Order 12988 (61 FR 4729, February 7, 1996), in issuing this rule, EPA has taken the necessary steps to eliminate drafting errors and ambiguity, minimize potential litigation, and provide a clear legal standard for affected conduct. EPA has complied with Executive Order 12630 (53 FR 8859, March 15, 1988) by examining the takings implications of the rule in accordance with the ''Attorney General's Supplemental Guidelines for the Evaluation of Risk and Avoidance of Unanticipated Takings' issued under the executive order. This rule does not impose an information collection burden under the provisions of the Paperwork Reduction Act of 1995 (44 U.S.C. 3501 *et seq.*).

The Congressional Review Act, 5 U.S.C. 801 *et seq.*, as added by the Small Business Regulatory Enforcement Fairness Act of 1996, generally provides that before a rule may take effect, the agency promulgating the rule must submit a rule report, which includes a copy of the rule, to each House of the Congress and to the Comptroller General of the United States. EPA will submit a report containing this rule and other required information to the U.S. Senate, the U.S. House of Representatives, and the Comptroller General of the United States prior to publication of the rule in the **Federal Register**. A major rule cannot take effect until 60 days after it is published in the **Federal Register**. This action is not a ''major rule'' as defined by 5 U.S.C. 804(2).

Under section 307(b)(1) of the Clean Air Act, petitions for judicial review of this action must be filed in the United States Court of Appeals for the appropriate circuit by December 18, 2000. Interested parties should comment in response to the proposed rule rather than petition for judicial review, unless the objection arises after the comment period allowed for in the proposal. Filing a petition for reconsideration by the Administrator of this final rule does not affect the finality of this rule for the purposes of judicial review nor does it extend the time within which a petition for judicial review may be filed, and shall not postpone the effectiveness of such rule or action. This action may not be challenged later in proceedings to enforce its requirements. (See section 307(b)(2).)

List of Subjects in 40 CFR Part 52

Environmental protection, Air pollution control, Hydrocarbons, Incorporation by reference, Ozone, Reporting and recordkeeping requirements.

Dated: October 6, 2000.

Mindy S. Lubber,

Regional Administrator, EPA-New England.

Part 52 of chapter I, title 40 of the Code of Federal Regulations is amended as follows:

PART 52—[AMENDED]

1. The authority citation for part 52 continues to read as follows:

Authority: 42 U.S.C. 7401 *et seq.*

Subpart H—Connecticut

§ 52.370 [Amended]

2. Section 52.369 is revised by removing and reserving paragraph (c).

3. Section 52.370 is amended by adding paragraph (c)(84) to read as follows:

§ 52.370 Identification of plan.

* * * * *

(c) * * *

(84) Revisions to the State Implementation Plan submitted by the Connecticut Department of Environmental Protection on April 15, 1997, April 20, 1998, and September 2, 1999.

(i) Incorporation by reference.

(A) Section 22a–174–1(97) of the Regulation of the Connecticut State Agencies, definition of the term ''Volatile organic compound'' or ''VOC,'' effective in the State of Connecticut on December 22, 1997.

(B) Section 22a–174–20(b) of the Regulation of the Connecticut State Agencies, entitled ''Loading of gasoline and other volatile organic compounds,'' effective in the State of Connecticut on April 1, 1998.

(C) Section 22a–174–20(l) of the Regulation of the Connecticut State Agencies, entitled ''Metal cleaning,'' effective in the State of Connecticut on August 23, 1996.

(D) Section 22a–174–20(s) of the Regulation of the Connecticut State Agencies, ''Miscellaneous metal parts and products,'' effective in the State of Connecticut on March 1, 1995.

(E) Section 22a–174–32 of the Regulation of the Connecticut State Agencies, entitled ''Reasonably Available Control Technology (RACT) for volatile organic compounds,'' effective in the State of Connecticut on August 27, 1999.

(ii) Additional materials.

(A) Letters from the Connecticut Department of Environmental Protection dated April 15, 1997, April 20, 1998, and September 2, 1999 submitting revisions to the Connecticut State Implementation Plan.

4. Section 52.375 is amended by adding paragraphs (e) and (f) to read as follows:

§ 52.375 Certification of no sources.

* * * * *

(e) Synthetic organic chemical manufacturing industry (SOCMI) distillation.

(f) Synthetic organic chemical manufacturing industry (SOCMI) reactor vessels.

§ 52.380 [Amended]

5. Section 52.380 is amended by removing and reserving paragraph (c)(2).

6. In § 52.385, Table 52.385 is amended by adding entries to the existing state citations for 22a–174–1, 22a–174–20, and 22a–174–32, to read as follows:

§ 52.385 EPA-approved Connecticut Regulations.

* * * * *

TABLE 52.385—EPA-APPROVED REGULATIONS

Connecticut State citation	Title/subject	Dates		Federal Register citation	Section 52.370	Comments/description
		Date adopted by State	Date approved by EPA			
*	*	*		*	*	* *
22a–174–1	* * *	12/22/97	10/19/00	[insert *FR* citation from published date].	(c)(84)	Changes to the definition of VOC to exempt certain negligibly photoreactive compounds.
*	*	*		*	*	* *
22a–174–20	Loading gasoline and other volatile organic compounds.	4/1/98	10/19/00	[insert *FR* citation from published date].	(c)(84)	Changes to gasoline and volatile organic loading regulations.
	Metal cleaning	8/23/96	10/19/00	[insert *FR* citation from published date].	(c)(84)	Changes to metal cleaning regulations.
	Miscellaneous metal parts and products.	8/1/95	10/19/00	[insert *FR* citation from published date].	(c)(84)	Changes to regulations to add emission limit for architectural aluminum panels.
*	*	*		*	*	* *
22a–174–32	* * *	8/27/99	10/19/00	[insert *FR* citation from published date].	(c)(84)	Changes to the non-CTG regulation.
*	*	*		*	*	* *

[FR Doc. 00–26613 Filed 10–18–00; 8:45 am]

BILLING CODE 6560–50–P

ENVIRONMENTAL PROTECTION AGENCY

40 CFR Part 52

[CT–62–7221a; A–1–FRL–6877–5]

Approval and Promulgation of Air Quality Implementation Plans; Connecticut; Post-1996 Rate of Progress Plans

AGENCY: Environmental Protection Agency (EPA).

ACTION: Final rule.

SUMMARY: EPA is approving State Implementation Plan (SIP) revisions submitted by the State of Connecticut. These revisions establish post-1996 rate of progress (ROP) emission reduction plans, including minor adjustments to the Connecticut 1990 base year inventory, for the Greater Hartford serious ozone nonattainment area, and for the Connecticut portion of the New York, New Jersey, Connecticut (NY–NJ–CT) severe ozone nonattainment area. The intended effect of this action is to approve these SIP revisions as meeting the requirements of the Clean Air Act.

EFFECTIVE DATE: This rule will become effective on November 20, 2000.

ADDRESSES: Copies of the documents relevant to this action are available for public inspection during normal business hours, by appointment at the Office of Ecosystem Protection, U.S. Environmental Protection Agency, EPA-New England, One Congress Street, 11th floor, Boston, MA; and the Bureau of Air Management, Department of Environmental Protection, State Office Building, 79 Elm Street, Hartford, CT 06106–1630.

FOR FURTHER INFORMATION CONTACT: Robert McConnell, (617) 918–1046.

SUPPLEMENTARY INFORMATION: This Supplementary Information section is organized as follows:

A. What action is EPA taking today?
B. What changes were made to the Connecticut base year inventory?
C. What are Connecticut's target emission levels for VOC and NO_X?
D. What control strategy will Connecticut use to meet its emission target levels?
E. How did Connecticut meet the contingency measure requirement?
F. What are the State's conformity budgets?

A. What Action is EPA Taking Today?

EPA is approving post-1996 ROP emission reduction plans through 1999, and minor revisions to the 1990 base year inventory, submitted by the State of Connecticut for the Greater Hartford serious ozone nonattainment area, and the Connecticut portion of the NY–NJ–CT severe ozone nonattainment area, which is a multi-state ozone nonattainment area, as revisions to Connecticut's SIP. Connecticut did not enter into an agreement with New York and New Jersey to do a multi-state ROP plan, and therefore submitted a plan to reduce emissions only in the Connecticut portion of this area. EPA is taking action today only on the Connecticut portion of the NY–NJ–CT post-1996 plan.

The post-1996 ROP plans document how Connecticut complied with the provisions of section 182 (c)(2) of the Federal Clean Air Act (the Act), through 1999. These sections of the Act require states containing certain ozone nonattainment areas develop strategies to reduce emissions of the pollutants that react to form ground level ozone.

On June 30, 2000 (65 FR 40560), EPA published a proposed rulemaking for the State of Connecticut. That document proposed approval of the Connecticut post-1996 ROP plans. The formal SIP revision was submitted by Connecticut on December 30, 1997 and January 7, 1998.

B. What Changes Were Made to the Connecticut Base Year Inventory?

Connecticut made two minor changes to its 1990 base year inventory, as described in the June 30, 2000 proposed approval action. EPA approved the Connecticut 1990 base year emission inventory on October 24, 1997 (62 FR

55336). The revised base year emission estimates shown in Table 1 are being approved as a revision to the State's SIP. The emission values in Table 1 represent tons per summer day (tpsd) emissions.

TABLE 1

Nonattainment area	Source category	Original estimate (approved 10/24/97)	Revised estimate (approved in today's action)
Greater Hartford	Point	NO_X = 87.31 tpsd	NO_X = 84.21 tpsd
Greater Hartford	On-road mobile	VOC = 127.12 NO_X = 175.56	VOC = 121.0 NO_X = 172.4
NY–NJ–CT	On-road mobile	VOC = 43.83 NO_X = 55.73	VOC = 40.4 NO_X = 54.8

C. What Are Connecticut's Target Emission Levels for VOC and NO_X?

Connecticut's 1999 target emission levels are as follows. For the Greater Hartford area, the VOC target is 307.1 tpsd, and the NO_X target is 297.9 tpsd. For the Connecticut portion of the NY–NJ–CT area, the VOC target is 93.0 tpsd, and the NO_X target is 104.0 tpsd. These target emission levels represent the maximum amount of emissions that Connecticut can emit in 1999, given the State's post-1996 emission reduction requirements.

These target levels match the acetone-adjusted target levels EPA calculated in its June 30, 2000 proposed approval action. Connecticut confirmed in writing by letter dated July 21, 2000 its agreement with EPA's adjustments to the State's original emission target levels.

D. What Control Strategy Will Connecticut use to Meet its Emission Target Levels?

EPA's June 30, 2000 proposed approval action outlined the control strategy that Connecticut used to meet its emission target levels. In summary, the State's control strategy consists of the emission reductions from the continued enforcement of measures EPA approved as part of the State's 15 percent emission reduction plans (64 FR 12015) (March 10, 1999), coupled with emission reductions from the State's NO_X control strategy for large industrial point sources, federal non-road engine standards, and Connecticut's Low Emission Vehicle program. All these control measures are approved as part of Connecticut's SIP or are otherwise enforceable under the Act.

E. How Did Connecticut Meet the Contingency Measure Requirement?

Connecticut met the contingency requirements of sections 172(c)(9) and 182(c)(9) of the Act by using surplus NO_X emission reductions achieved by the State's NO_X control strategy. As explained in more detail in the EPA's June 30, 2000 proposed approval action, Connecticut's NO_X control strategy achieves sufficient surplus reductions beyond those needed to meet the ROP targets to cover the State's 3 percent contingency measure obligation. The surplus reductions in the greater Hartford area are not sufficient to cover completely the area's 3 percent contingency obligation, but a significant 10.7 tpsd surplus remains in the NY–NJ–CT area. This surplus in the NY–NJ–CT area is sufficient to cover that area's 3 percent contingency obligation, to transfer 2.4 tpsd to the Greater Hartford area to complete that area's contingency obligation, and to use 1.2 tpsd to cover the VOC shortfall that occurred due to the State's failure to remove acetone from its area source base year inventory.

F. What Are the State's Conformity Budgets?

Although the Connecticut post-1996 ROP plans contain motor vehicle emission budgets for 1999, the current conformity budgets are those contained in the document, ''Addenda to the Ozone Attainment Demonstrations for the Southwest Connecticut Severe Ozone Nonattainment area and Greater Connecticut Serious Ozone Nonattainment area,'' which was submitted to EPA on February 15, 2000. This document included the transportation conformity budgets for 2007 shown below in Table 2.

TABLE 2

Nonattainment area	VOC (tpsd)	NO_X (tpsd)
Severe area	9.7	23.7
Serious area	30.0	79.6

Since these budgets are more restrictive, cover a time frame longer than the post-1996 ROP plans, and are based on the attainment plan, the 2007 budgets take precedence over the 1999 budgets. Furthermore, EPA New England published a document in the **Federal Register** announcing that these budgets are adequate for use in transportation conformity determinations on June 16, 2000 (65 FR 37778). Therefore, the 2007 budgets supersede the 1999 budgets. As a result, all new and revised State Transportation Improvement Programs that require a conformity determination must conform to these 2007 budgets, not the 1999 budgets contained in the post-1996 rate of progress plan.

Other specific requirements of post-1996 ROP plans and the rationale for EPA's proposed action are explained in the NPR and will not be restated here. The only public comment received on the NPR was a July 21, 2000 letter from the Connecticut Department of Environmental Protection confirming their agreement with the manner in which EPA excluded acetone from the State's base year inventory.

Final Action

EPA is approving post-1996 ROP plans for the Greater Hartford serious area, and the Connecticut portion of the NY–NJ–CT severe area through 1999, and minor revisions to the Connecticut 1990 emission inventory for ozone, as a revision to the Connecticut SIP.

Nothing in this action should be construed as permitting or allowing or establishing a precedent for any future request for revision to any State implementation plan. Each request for revision to the State implementation plan shall be considered separately in light of specific technical, economic, and environmental factors and in relation to relevant statutory and regulatory requirements.

III. Administrative Requirements

Under Executive Order 12866 (58 FR 51735, October 4, 1993), this action is not a ''significant regulatory action'' and therefore is not subject to review by the Office of Management and Budget. This action merely approves state law as meeting Federal requirements and imposes no additional requirements beyond those imposed by state law. Accordingly, the Administrator certifies that this rule will not have a significant economic impact on a substantial number of small entities under the Regulatory Flexibility Act (5 U.S.C. 601

et seq.). Because this rule approves pre-existing requirements under state law and does not impose any additional enforceable duty beyond that required by state law, it does not contain any unfunded mandate or significantly or uniquely affect small governments, as described in the Unfunded Mandates Reform Act of 1995 (Public Law 104–4). For the same reason, this rule also does not significantly or uniquely affect the communities of tribal governments, as specified by Executive Order 13084 (63 FR 27655, May 10, 1998). This rule will not have substantial direct effects on the States, on the relationship between the national government and the States, or on the distribution of power and responsibilities among the various levels of government, as specified in Executive Order 13132 (64 FR 43255, August 10, 1999), because it merely approves a state rule implementing a Federal standard, and does not alter the relationship or the distribution of power and responsibilities established in the Clean Air Act. This rule also is not subject to Executive Order 13045 (62 FR 19885, April 23, 1997), because it is not economically significant.

In reviewing SIP submissions, EPA's role is to approve state choices, provided that they meet the criteria of the Clean Air Act. In this context, in the absence of a prior existing requirement for the State to use voluntary consensus standards (VCS), EPA has no authority to disapprove a SIP submission for failure to use VCS. It would thus be inconsistent with applicable law for EPA, when it reviews a SIP submission, to use VCS in place of a SIP submission that otherwise satisfies the provisions of the Clean Air Act. Thus, the requirements of section 12(d) of the National Technology Transfer and Advancement Act of 1995 (15 U.S.C. 272 note) do not apply. As required by section 3 of Executive Order 12988 (61 FR 4729, February 7, 1996), in issuing this rule, EPA has taken the necessary steps to eliminate drafting errors and ambiguity, minimize potential litigation, and provide a clear legal standard for affected conduct. EPA has complied with Executive Order 12630 (53 FR 8859, March 15, 1988) by examining the takings implications of the rule in accordance with the ''Attorney General's Supplemental Guidelines for the Evaluation of Risk and Avoidance of Unanticipated Takings' issued under the executive order. This rule does not impose an information collection burden under the provisions of the Paperwork Reduction Act of 1995 (44 U.S.C. 3501 *et seq.*).

The Congressional Review Act, 5 U.S.C. 801 *et seq.*, as added by the Small Business Regulatory Enforcement Fairness Act of 1996, generally provides that before a rule may take effect, the agency promulgating the rule must submit a rule report, which includes a copy of the rule, to each House of the Congress and to the Comptroller General of the United States. EPA will submit a report containing this rule and other required information to the U.S. Senate, the U.S. House of Representatives, and the Comptroller General of the United States prior to publication of the rule in the **Federal Register**. A major rule cannot take effect until 60 days after it is published in the **Federal Register**. This action is not a ''major rule'' as defined by 5 U.S.C. 804(2).

Under section 307(b)(1) of the Clean Air Act, petitions for judicial review of this action must be filed in the United States Court of Appeals for the appropriate circuit by December 18, 2000. Filing a petition for reconsideration by the Administrator of this final rule does not affect the finality of this rule for the purposes of judicial review nor does it extend the time within which a petition for judicial review may be filed, and shall not postpone the effectiveness of such rule or action. This action may not be challenged later in proceedings to enforce its requirements. (See section 307(b)(2).)

List of Subjects in 40 CFR Part 52

Environmental protection, Air pollution control, Hydrocarbons, Nitrogen dioxide, Ozone.

Dated: September 15, 2000.

Mindy S. Lubber,

Regional Administrator, EPA-New England.

Part 52 of chapter I, title 40 of the Code of Federal Regulations is amended as follows:

PART 52—[AMENDED]

1. The authority citation for part 52 continues to read as follows:

Authority: 42 U.S.C. 7401 *et seq.*

Subpart H—Connecticut

2. Section 52.377 is added to subpart H to read as follows:

§ 52.377 Control strategy: Ozone.

Revisions to the State Implementation Plan submitted by the Connecticut Department of Environmental Protection on December 30, 1997 and January 7, 1998. These revisions are for the purpose of satisfying the rate of progress requirement of section 182(c)(2) through 1999, and the contingency measure requirements of sections 172(c)(9) and 182(c)(9) of the Clean Air Act, for the Greater Hartford serious ozone nonattainment area, and the Connecticut portion of the NY–NJ–CT severe ozone nonattainment area.

3. Section 52.384 is amended by revising paragraph (a) to read as follows:

§ 52.384 Emission inventories.

(a) The Governor's designee for the State of Connecticut submitted the 1990 base year emission inventories for the Connecticut portion of the New York-New Jersey-Connecticut severe ozone nonattainment area and the Greater Hartford serious ozone nonattainment area on January 13, 1994 as revisions to the State's SIP. Revisions to the inventories were submitted on February 3, 1994, February 16, 1995, and December 30, 1997. The 1990 base year emission inventory requirement of section 182(a)(1) of the Clean Air Act, as amended in 1990, has been satisfied for these areas.

* * * * *

[FR Doc. 00–26750 Filed 10–18–00; 8:45 am]

BILLING CODE 6560–50–P

ENVIRONMENTAL PROTECTION AGENCY

40 CFR Part 52

[VA109–5050; FRL–6887–7]

Approval and Promulgation of Air Quality Implementation Plans; Virginia; Approval of Removal of TSP Ambient Air Quality Standards

AGENCY: Environmental Protection Agency (EPA).

ACTION: Direct final rule.

SUMMARY: EPA is approving revisions to the Commonwealth of Virginia's State Implementation Plan (SIP). The revisions consist of the removal of references to total suspended particulates (TSP) from sections of the Commonwealth's regulations regarding ambient air quality standards and air pollution episode prevention. These revisions were submitted by the Commonwealth of Virginia, Department of Environmental Quality (VDEQ) as a revision to its SIP on April 21, 2000.

DATES: This rule is effective on December 18, 2000 without further notice, unless EPA receives adverse written comment by November 20, 2000. If EPA receives such comments, it will publish a timely withdrawal of the direct final rule in the **Federal Register** and inform the public that the rule will not take effect.

ADDRESSES: Written comments should be mailed to Mr. Denis Lohman, Acting Chief, Technical Assessment Branch,

Mailcode 3AP22, U.S. Environmental Protection Agency, Region III, 1650 Arch Street, Philadelphia, Pennsylvania 19103. Copies of the documents relevant to this action are available for public inspection during normal business hours at the Air Protection Division, U.S. Environmental Protection Agency, Region III, 1650 Arch Street, Philadelphia, Pennsylvania 19103; Virginia Department of Environmental Quality, 629 East Main Street, Richmond, Virginia, 23219.

FOR FURTHER INFORMATION CONTACT: Ruth E. Knapp, (215) 814–2191, or by e-mail at knapp.ruth@epa.gov. While questions may be submitted via e-mail, any comments on this rulemaking action must be submitted, in writing, as indicated above.

SUPPLEMENTARY INFORMATION: Throughout this document wherever ''we,'' ''us'' or ''our'' are used we mean EPA.

Table of Contents

I. What is EPA Approving?
II. What are the Provisions of the Revised Regulation?
III. What are the Environmental Effects of this Action?
IV. Special Provisions Related to Virginia.
V. EPA Rulemaking Action.
VI. Administrative Requirements.

I. What is EPA Approving?

We are approving, as a SIP revision, the removal of references to TSP ambient standards from Virginia's regulations found at Title 9 VAC 5 Chapters 30 and 70. Chapter 30 is entitled, Ambient Air Quality Standards, and Chapter 70 is entitled, Air Pollution Episode Prevention.

II. What are the Provisions of the Revised Regulation?

In 1987, EPA replaced the National Ambient Air Quality Standards (NAAQS) for TSP with NAAQS for particulate matter less than 10 micrometers in diameter (PM10). At that time, we determined that smaller particles (PM10) were responsible for health and welfare effects. Unlike larger particles, the smaller particles are able to enter the respiratory system. On July 1, 1988, the Commonwealth adopted the Federal NAAQS for PM10 at 9 VAC 5–30–60. Likewise, Virginia adopted references to PM10 ambient levels in 9 VAC 5–70–40 ''Episode determination.''

The SIP revision consists of the repeal of the entire text of 9 VAC 5–30–20 ''Particulate matter (TSP)'' to delete all references to TSP as a primary and secondary ambient standard. In addition, references to TSP ambient standards in 9 VAC 5–70–40 ''Episode determination'' are also being deleted. Although, these references to TSP ambient standards are being removed, the Commonwealth's regulations continue include the appropriate references to PM10.

III. What are the Environmental Effects of this Action?

The Commonwealth's regulations governing the control of fugitive dust of all sizes, including TSP, from various types of sources such as sand and gravel processing remain in effect. The removal of references to the former TSP ambient standards from 9 VAC -5–30–20 and 5–70–40 do not amend the Commonwealth's fugitive dust regulations. Therefore, no adverse environmental effects occur as the result of this SIP revision.

IV. Special Provisions Related to Virginia

In 1995, Virginia adopted legislation that provides, subject to certain conditions, for an environmental assessment (audit) ''privilege'' for voluntary compliance evaluations performed by a regulated entity. The legislation further addresses the relative burden of proof for parties either asserting the privilege or seeking disclosure of documents for which the privilege is claimed. Virginia's legislation also provides, subject to certain conditions, for a penalty waiver for violations of environmental laws when a regulated entity discovers such violations pursuant to a voluntary compliance evaluation and voluntarily discloses such violations to the Commonwealth and takes prompt and appropriate measures to remedy the violations. Virginia's Voluntary Environmental Assessment Privilege Law, Va. Code Sec. 10.1–1198, provides a privilege that protects from disclosure documents and information about the content of those documents that are the product of a voluntary environmental assessment. The Privilege Law does not extend to documents or information (1) that are generated or developed before the commencement of a voluntary environmental assessment; (2) that are prepared independently of the assessment process; (3) that demonstrates a clear, imminent and substantial danger to the public health or environment; or (4) that are required by law.

On January 12, 1997, the Commonwealth of Virginia Office of the Attorney General provided a legal opinion that states that the Privilege law, Va. Code Sec. 10.1–1198, precludes granting a privilege to documents and information ''required by law,'' including documents and information ''required by Federal law to maintain program delegation, authorization or approval,'' since Virginia must ''enforce federally authorized environmental programs in a manner that is no less stringent than their Federal counterparts * * *.'' The opinion concludes that ''regarding section 10.1–1198, therefore, documents or other information needed for civil or criminal enforcement under one of these programs could not be privileged because such documents and information are essential to pursuing enforcement in a manner required by Federal law to maintain program delegation, authorization or approval.''

Virginia's Immunity law, Va. Code Sec. 10.1–1199, provides that ''[t]o the extent consistent with requirements imposed by Federal law,'' any person making a voluntary disclosure of information to a state agency regarding a violation of an environmental statute, regulation, permit, or administrative order is granted immunity from administrative or civil penalty. The Attorney General's January 12, 1997 opinion states that the quoted language renders this statute inapplicable to enforcement of any federally authorized programs, since ''no immunity could be afforded from administrative, civil, or criminal penalties because granting such immunity would not be consistent with Federal law, which is one of the criteria for immunity.''

Therefore, EPA has determined that Virginia's Privilege and Immunity statutes will not preclude the Commonwealth from enforcing its program consistent with the Federal requirements. In any event, because EPA has also determined that a state audit privilege and immunity law can affect only state enforcement and cannot have any impact on Federal enforcement authorities, EPA may at any time invoke its authority under the Clean Air Act, including, for example, sections 113, 167, 205, 211 or 213, to enforce the requirements or prohibitions of the state plan, independently of any state enforcement effort. In addition, citizen enforcement under Section 304 of the Clean Air Act is likewise unaffected by this, or any, state audit privilege or immunity law.

V. EPA's Rulemaking Action

We are approving revisions to the Virginia SIP submitted on April 21, 2000. The revisions remove references to TSP ambient air quality standards and levels previously found at 9 VAC 5–30–20 and 9 VAC 5–70–40. We are publishing this action without prior proposal because we view this as a noncontroversial revision and anticipate

no adverse comments. However, in a separate document in the ''Proposed Rules'' section of today's **Federal Register**, we are publishing a separate document that will serve as the proposal to approve the SIP revision if adverse comments are filed. This rule will be effective on December 18, 2000 without further notice unless we receive adverse comment by November 20, 2000. Should we receive such comments, we will publish a timely withdrawal in the **Federal Register** informing the public that the rule will not take effect. We will address all public comments in a subsequent final rule based on the proposed rule. We will not institute a second comment period on this action. Any parties interested in commenting must do so at this time.

VI. Administrative Requirements

A. General Requirements

Under Executive Order 12866 (58 FR 51735, October 4, 1993), this action is not a ''significant regulatory action'' and therefore is not subject to review by the Office of Management and Budget. This action merely approves state law as meeting Federal requirements and imposes no additional requirements beyond those imposed by state law. Accordingly, the Administrator certifies that this rule will not have a significant economic impact on a substantial number of small entities under the Regulatory Flexibility Act (5 U.S.C. 601 *et seq.*). Because this rule approves pre-existing requirements under state law and does not impose any additional enforceable duty beyond that required by state law, it does not contain any unfunded mandate or significantly or uniquely affect small governments, as described in the Unfunded Mandates Reform Act of 1995 (Public Law 104–4). For the same reason, this rule also does not significantly or uniquely affect the communities of tribal governments, as specified by Executive Order 13084 (63 FR 27655, May 10, 1998). This rule will not have substantial direct effects on the States, on the relationship between the national government and the States, or on the distribution of power and responsibilities among the various levels of government, as specified in Executive Order 13132 (64 FR 43255, August 10, 1999), because it merely approves a state rule implementing a Federal standard, and does not alter the relationship or the distribution of power and responsibilities established in the Clean Air Act. This rule also is not subject to Executive Order 13045 (62 FR 19885, April 23, 1997), because it is not economically significant. In reviewing SIP submissions, EPA's role is to approve state choices, provided that they meet the criteria of the Clean Air Act. In this context, in the absence of a prior existing requirement for the State to use voluntary consensus standards (VCS), EPA has no authority to disapprove a SIP submission for failure to use VCS. It would thus be inconsistent with applicable law for EPA, when it reviews a SIP submission, to use VCS in place of a SIP submission that otherwise satisfies the provisions of the Clean Air Act. Thus, the requirements of Section 12(d) of the National Technology Transfer and Advancement Act of 1995 (15 U.S.C. 272 note) do not apply. As required by Section 3 of Executive Order 12988 (61 FR 4729, February 7, 1996), in issuing this rule, EPA has taken the necessary steps to eliminate drafting errors and ambiguity, minimize potential litigation, and provide a clear legal standard for affected conduct. EPA has complied with Executive Order 12630 (53 FR 8859, March 15, 1988) by examining the takings implications of the rule in accordance with the ''Attorney General's Supplemental Guidelines for the Evaluation of Risk and Avoidance of Unanticipated Takings' issued under the executive order. This rule does not impose an information collection burden under the provisions of the Paperwork Reduction Act of 1995 (44 U.S.C. 3501 *et seq.*).

B. Submission to Congress and the Comptroller General

The Congressional Review Act, 5 U.S.C. 801 *et seq.*, as added by the Small Business Regulatory Enforcement Fairness Act of 1996, generally provides that before a rule may take effect, the agency promulgating the rule must submit a rule report, which includes a copy of the rule, to each House of the Congress and to the Comptroller General of the United States. EPA will submit a report containing this rule and other required information to the U.S. Senate, the U.S. House of Representatives, and the Comptroller General of the United States prior to publication of the rule in the **Federal Register**. This rule is not a ''major rule'' as defined by 5 U.S.C. 804(2).

C. Petitions for Judicial Review

Under Section 307(b)(1) of the Clean Air Act, petitions for judicial review of this action must be filed in the United States Court of Appeals for the appropriate circuit by December 18, 2000. Filing a petition for reconsideration by the Administrator of this final rule does not affect the finality of this rule for the purposes of judicial review nor does it extend the time within which a petition for judicial review may be filed, and shall not postpone the effectiveness of such rule or action. This action regarding the removal of references to TSP ambient standards and levels from 9 VAC 5–30–20 and 9 VAC 5–70–40 of the Commonwealth of Virginia's regulations may not be challenged later in proceedings to enforce its requirements. (See section 307(b)(2).)

List of Subjects in 40 CFR Part 52

Environmental protection, Air pollution control, Particulate matter, Reporting and recordkeeping requirements.

Dated: October 5, 2000.

Bradley M. Campbell,

Regional Administrator, Region III.

40 CFR part 52 is amended as follows:

PART 52—[AMENDED]

1. The authority citation for part 52 continues to read as follows:

Authority: 42 U.S.C. 7401*et seq.*

Subpart VV—Virginia

2. In § 52.2420, the entries for 9 VAC 5, Chapter 30, subsection 5–30–20 and Chapter 70, subsection 5–70–40 in the ''EPA Approved Regulations in the Virginia SIP'' table in paragraph (c) is revised to read as follows:

§ 52.2420 Identification of plan.

* * * * *

(c) EPA approved regulations.

EPA-APPROVED REGULATIONS IN THE VIRGINIA SIP

State citation (9 VAC 5)	Title/subject	State effective date	EPA approval date	Explanation [former SIP citation]
*	*	*	*	*
Chapter 30	Ambient Air Quality Standards (Part III)			

EPA-APPROVED REGULATIONS IN THE VIRGINIA SIP—Continued

State citation (9 VAC 5)	Title/subject	State effective date	EPA approval date	Explanation [former SIP citation]
* *	*	*	*	* *
5–30–20	Particulate Matter (TSP)	4/1/99	Type: 10/19/00	This section is being removed.
* *	*	*	*	* *
Chapter 70		Air Pollution Episode Prevention (Part VII)		
* *	*	*	*	* *
5–70–40	Episode Determination	4/1/99	Type: 10/19/00	References to TSP are being removed.
* *	*	*	*	* *

[FR Doc. 00–26908 Filed 10–18–00; 8:45 am]

BILLING CODE 6560–50–P

ENVIRONMENTAL PROTECTION AGENCY

40 CFR Part 180

[OPP–301066; FRL–6748–2]

RIN 2070–AB78

Norflurazon; Extension of Tolerances for Emergency Exemptions

AGENCY: Environmental Protection Agency (EPA).

ACTION: Final rule.

SUMMARY: This regulation extends time-limited tolerances for combined residues of the herbicide norflurazon and its desmethl metabolite in or on bermudagrass forage and hay at 2 and 3 parts per million (ppm) respectively, for an additional 2–year period. These tolerances will expire and are revoked on November 30, 2002. This action is in response to EPA's granting of an emergency exemption under section 18 of the Federal Insecticide, Fungicide, and Rodenticide Act (FIFRA) authorizing use of the pesticide on bermudagrass. Section 408(l)(6) of the Federal Food, Drug, and Cosmetic Act (FFDCA) requires EPA to establish a time-limited tolerance or exemption from the requirement for a tolerance for pesticide chemical residues in food that will result from the use of a pesticide under an emergency exemption granted by EPA under section 18 FIFRA.

DATES: This regulation is effective October 19, 2000. Objections and requests for hearings, identified by docket control number OPP–301066, must be received by EPA on or before December 18, 2000.

ADDRESSES: Written objections and hearing requests may be submitted by mail, in person, or by courier. Please follow the detailed instructions for each method as provided in Unit III. of the **SUPPLEMENTARY INFORMATION**. To ensure proper receipt by EPA, your objections and hearing requests must identify docket control number OPP–301066 in the subject line on the first page of your response.

FOR FURTHER INFORMATION CONTACT: By mail: Libby Pemberton, Registration Division (7505C), Office of Pesticide Programs, Environmental Protection Agency, 1200 Pennsylvania Ave., NW., Washington, DC 20460; telephone number:703 308–9364; and e-mail address: pemberton.libby@epa.gov.

SUPPLEMENTARY INFORMATION:

I. General Information

A. Does this Action Apply to Me?

You may be affected by this action if you are an agricultural producer, food manufacturer, or pesticide manufacturer. Potentially affected categories and entities may include, but are not limited to:

Categories	NAICS codes	Examples of Potentially Affected Entities
Industry	111 112 311 32532	Crop production Animal production Food manufacturing Pesticide manufacturing

This listing is not intended to be exhaustive, but rather provides a guide for readers regarding entities likely to be affected by this action. Other types of entities not listed in the table could also be affected. The North American Industrial Classification System (NAICS) codes have been provided to assist you and others in determining whether or not this action might apply to certain entities. If you have questions regarding the applicability of this action to a particular entity, consult the person listed under **FOR FURTHER INFORMATION CONTACT**.

B. How Can I Get Additional Information, Including Copies of this Document and Other Related Documents?

1. *Electronically*. You may obtain electronic copies of this document, and certain other related documents that might be available electronically, from the EPA Internet Home Page at http://www.epa.gov/. To access this document, on the Home Page select ''Laws and Regulations,'' ''Regulations and Proposed Rules,'' then look up the entry for this document under the ''**Federal Register**—Environmental Documents.'' You can also go directly to the **Federal Register** listings at http://www.epa.gov/fedrgstr/.

2. *In person*. The Agency has established an official record for this action under docket control number OPP–301066. The official record consists of the documents specifically referenced in this action, and other information related to this action, including any information claimed as Confidential Business Information (CBI). This official record includes the documents that are physically located in the docket, as well as the documents that are referenced in those documents. The public version of the official record does not include any information claimed as CBI. The public version of the official record, which includes printed, paper versions of any electronic comments submitted during an applicable comment period is available for inspection in the Public Information and Records Integrity Branch (PIRIB), Rm. 119, Crystal Mall #2, 1921 Jefferson Davis Hwy., Arlington, VA, from 8:30 a.m. to 4 p.m., Monday through Friday, excluding legal holidays. The PIRIB telephone number is (703) 305–5805.

II. Background and Statutory Findings

EPA issued a final rule, published in the **Federal Register** of February 25, 1998 (63 FR 9425) (FRL–5770–8), which announced that on its own initiative under section 408 of the FFDCA, 21 U.S.C. 346a, as amended by the Food Quality Protection Act of 1996 (FQPA) (Public Law 104–170) it established time-limited tolerances for the combined residues of norflurazon and its desmethyl metabolite in or on bermudagrass forage and hay at 2 and 3 parts per million (ppm) respectively, with an expiration date of 11/30/99. EPA established the tolerances because section 408(l)(6) of the FFDCA requires EPA to establish a time-limited tolerance or exemption from the requirement for a tolerance for pesticide chemical residues in food that will result from the use of a pesticide under an emergency exemption granted by EPA under section 18 of FIFRA. Such tolerances can be established without providing notice or period for public comment. These tolerances were subsequently extended in the **Federal Register** of March 24, 1999 (64 FR 14099)(FRL–6063–2) until 11/30/00.

EPA received a request to extend the use of norflurazon on bermudagrass for this year's growing season due to the continuation of the emergency situation. After having reviewed the submission, EPA concurs that emergency conditions exist. EPA has authorized under FIFRA section 18 the use of norflurazon on bermudagrass for control of grassy weeds in Alabama, Arkansas, Georgia and Mississippi.

EPA assessed the potential risks presented by residues of norflurazon in or on bermudagrass forage and hay. In doing so, EPA considered the safety standard in FFDCA section 408(b)(2), and decided that the necessary tolerance under FFDCA section 408(l)(6) would be consistent with the safety standard and with FIFRA section 18. The data and other relevant material have been evaluated and discussed in the final rule published in the **Federal Register** of February 25, 1998 (63 FR 9425) (FRL–5770–8). Based on that data and information considered, the Agency reaffirms that extension of the time-limited tolerances will continue to meet the requirements of section 408(l)(6). Therefore, the time-limited tolerances are extended for an additional 2–year period. EPA will publish a document in the **Federal Register** to remove the revoked tolerances from the Code of Federal Regulations (CFR). Although these tolerances will expire and are revoked on 11/20/2002, under FFDCA section 408(l)(5), residues of the pesticide not in excess of the amounts specified in the tolerances remaining in or on bermudagrass forage and hay after that date will not be unlawful, provided the pesticide is applied in a manner that was lawful under FIFRA and the application occurred prior to the revocation of the tolerances. EPA will take action to revoke these tolerances earlier if any experience with, scientific data on, or other relevant information on this pesticide indicate that the residues are not safe.

III. Objections and Hearing Requests

Under section 408(g) of the FFDCA, as amended by the FQPA, any person may file an objection to any aspect of this regulation and may also request a hearing on those objections. The EPA procedural regulations which govern the submission of objections and requests for hearings appear in 40 CFR part 178. Although the procedures in those regulations require some modification to reflect the amendments made to the FFDCA by the FQPA of 1996, EPA will continue to use those procedures, with appropriate adjustments, until the necessary modifications can be made. The new section 408(g) provides essentially the same process for persons to ''object'' to a regulation for an exemption from the requirement of a tolerance issued by EPA under new section 408(d), as was provided in the old FFDCA sections 408 and 409. However, the period for filing objections is now 60 days, rather than 30 days.

A. What Do I Need to Do to File an Objection or Request a Hearing?

You must file your objection or request a hearing on this regulation in accordance with the instructions provided in this unit and in 40 CFR part 178. To ensure proper receipt by EPA, you must identify docket control number OPP–301066 in the subject line on the first page of your submission. All requests must be in writing, and must be mailed or delivered to the Hearing Clerk on or before December 18, 2000.

1. *Filing the request.* Your objection must specify the specific provisions in the regulation that you object to, and the grounds for the objections (40 CFR 178.25). If a hearing is requested, the objections must include a statement of the factual issues(s) on which a hearing is requested, the requestor's contentions on such issues, and a summary of any evidence relied upon by the objector (40 CFR 178.27). Information submitted in connection with an objection or hearing request may be claimed confidential by marking any part or all of that information as CBI. Information so marked will not be disclosed except in accordance with procedures set forth in 40 CFR part 2. A copy of the information that does not contain CBI must be submitted for inclusion in the public record. Information not marked confidential may be disclosed publicly by EPA without prior notice.

Mail your written request to: Office of the Hearing Clerk (1900), Environmental Protection Agency, 1200 Pennsylvania Ave., NW., Washington, DC 20460. You may also deliver your request to the Office of the Hearing Clerk in Rm. C400, Waterside Mall, 401 M St., SW., Washington, DC 20460. The Office of the Hearing Clerk is open from 8 a.m. to 4 p.m., Monday through Friday, excluding legal holidays. The telephone number for the Office of the Hearing Clerk is (202) 260–4865.

2. *Tolerance fee payment.* If you file an objection or request a hearing, you must also pay the fee prescribed by 40 CFR 180.33(i) or request a waiver of that fee pursuant to 40 CFR 180.33(m). You must mail the fee to: EPA Headquarters Accounting Operations Branch, Office of Pesticide Programs, P.O. Box 360277M, Pittsburgh, PA 15251. Please identify the fee submission by labeling it ''Tolerance Petition Fees.''

EPA is authorized to waive any fee requirement ''when in the judgement of the Administrator such a waiver or refund is equitable and not contrary to the purpose of this subsection.'' For additional information regarding the waiver of these fees, you may contact James Tompkins by phone at (703) 305–5697, by e-mail at tompkins.jim@epa.gov, or by mailing a request for information to Mr. Tompkins at Registration Division (7505C), Office of Pesticide Programs, Environmental Protection Agency, 1200 Pennsylvania Ave., NW., Washington, DC 20460.

If you would like to request a waiver of the tolerance objection fees, you must mail your request for such a waiver to: James Hollins, Information Resources and Services Division (7502C), Office of Pesticide Programs, Environmental Protection Agency, 1200 Pennsylvania Ave., NW., Washington, DC 20460.

3. *Copies for the Docket.* In addition to filing an objection or hearing request with the Hearing Clerk as described in Unit III.A., you should also send a copy of your request to the PIRIB for its inclusion in the official record that is described in Unit I.B.2. Mail your copies, identified by docket control number OPP–301066, to: Public Information and Records Integrity Branch, Information Resources and Services Division (7502C), Office of Pesticide Programs, Environmental Protection Agency, 1200 Pennsylvania Ave., NW., Washington, DC 20460. In

person or by courier, bring a copy to the location of the PIRIB described in Unit I.B.2. You may also send an electronic copy of your request via e-mail to: opp-docket@epa.gov. Please use an ASCII file format and avoid the use of special characters and any form of encryption. Copies of electronic objections and hearing requests will also be accepted on disks in WordPerfect 6.1/8.0 file format or ASCII file format. Do not include any CBI in your electronic copy. You may also submit an electronic copy of your request at many Federal Depository Libraries.

B. When Will the Agency Grant a Request for a Hearing?

A request for a hearing will be granted if the Administrator determines that the material submitted shows the following: There is a genuine and substantial issue of fact; there is a reasonable possibility that available evidence identified by the requestor would, if established resolve one or more of such issues in favor of the requestor, taking into account uncontested claims or facts to the contrary; and resolution of the factual issues(s) in the manner sought by the requestor would be adequate to justify the action requested (40 CFR 178.32).

IV. Regulatory Assessment Requirements

This final rule establishes time-limited tolerances under FFDCA section 408. The Office of Management and Budget (OMB) has exempted these types of actions from review under Executive Order 12866, entitled *Regulatory Planning and Review* (58 FR 51735, October 4, 1993). This final rule does not contain any information collections subject to OMB approval under the Paperwork Reduction Act (PRA), 44 U.S.C. 3501 *et seq.*, or impose any enforceable duty or contain any unfunded mandate as described under Title II of the Unfunded Mandates Reform Act of 1995 (UMRA) (Public Law 104–4). Nor does it require any prior consultation as specified by Executive Order 13084, entitled *Consultation and Coordination with Indian Tribal Governments* (63 FR 27655, May 19, 1998); special considerations as required by Executive Order 12898, entitled *Federal Actions to Address Environmental Justice in Minority Populations and Low-Income Populations* (59 FR 7629, February 16, 1994); or require OMB review or any Agency action under Executive Order 13045, entitled *Protection of Children from Environmental Health Risks and Safety Risks* (62 FR 19885, April 23, 1997). This action does not involve any technical standards that would require Agency consideration of voluntary consensus standards pursuant to section 12(d) of the National Technology Transfer and Advancement Act of 1995 (NTTAA), Public Law 104–-113, section 12(d) (15 U.S.C. 272 note). Since tolerances and exemptions that are established on the basis of a FIFRA section 18 petition under FFDCA section 408, such as the tolerances in this final rule, do not require the issuance of a proposed rule, the requirements of the Regulatory Flexibility Act (RFA) (5 U.S.C. 601 *et seq.*) do not apply. In addition, the Agency has determined that this action will not have a substantial direct effect on States, on the relationship between the national government and the States, or on the distribution of power and responsibilities among the various levels of government, as specified in Executive Order 13132, entitled *Federalism* (64 FR 43255, August 10, 1999). Executive Order 13132 requires EPA to develop an accountable process to ensure ''meaningful and timely input by State and local officials in the development of regulatory policies that have federalism implications.'' ''Policies that have federalism implications'' is defined in the Executive Order to include regulations that have ''substantial direct effects on the States, on the relationship between the national government and the States, or on the distribution of power and responsibilities among the various levels of government.'' This final rule directly regulates growers, food processors, food handlers and food retailers, not States. This action does not alter the relationships or distribution of power and responsibilities established by Congress in the preemption provisions of FFDCA section 408(n)(4).

V. Submission to Congress and the Comptroller General

The Congressional Review Act, 5 U.S.C. 801 *et seq.*, as added by the Small Business Regulatory Enforcement Fairness Act of 1996, generally provides that before a rule may take effect, the agency promulgating the rule must submit a rule report, which includes a copy of the rule, to each House of the Congress and to the Comptroller General of the United States. EPA will submit a report containing this rule and other required information to the U.S. Senate, the U.S. House of Representatives, and the Comptroller General of the United States prior to publication of this final rule in the **Federal Register**. This final rule is not a ''major rule'' as defined by 5 U.S.C. 804(2).

List of Subjects in 40 CFR Part 180

Environmental protection, Administrative practice and procedure, Agricultural commodities, Pesticides and pests, Reporting and recordkeeping requirements.

Dated: October 6, 2000.

Peter Caulkins,

Acting Director, Registration Division, Office of Pesticide Programs.

Therefore, 40 CFR chapter I is amended as follows:

PART 180— [AMENDED]

1. The authority citation for part 180 continues to read as follows:

Authority: 21 U.S.C. 321(q), (346a) and 371.

§ 180.356 [Amended]

2. In § 180.356, amend paragraph (b) by revising the date in the table, for the commodities ''Grasses, Bermuda, Forage'' and ''Grasses, Bermuda, Hay'' ''11/30/00'' to read ''11/30/02.''

[FR Doc. 00–26913 Filed 10–18–00; 8:45 am]

BILLING CODE 6560–50–S

ENVIRONMENTAL PROTECTION AGENCY

40 CFR Part 180

[OPP–301065; FRL–6748–1]

RIN 2070–AB78

Zinc phosphide; Extension of Tolerances for Emergency Exemptions

AGENCY: Environmental Protection Agency (EPA).

ACTION: Final rule.

SUMMARY: This regulation extends time-limited tolerances for residues of phosphine resulting from the use of the rodenticide zinc phosphide in or on timothy, alfalfa, and clover at 0.1 part per million (ppm) for an additional 1½–year period. This tolerance will expire and is revoked on February 1, 2003. This action is in response to EPA's granting of an emergency exemption under section 18 of the Federal Insecticide, Fungicide, and Rodenticide Act authorizing use of the pesticide on timothy, alfalfa, and clover. Section 408(l)(6) of the Federal Food, Drug, and Cosmetic Act requires EPA to establish a time-limited tolerance or exemption from the requirement for a tolerance for pesticide chemical residues in food that will result from the use of a pesticide under an emergency exemption granted by EPA under section 18 of the Federal Insecticide, Fungicide, and Rodenticide Act.

DATES: This regulation is effective October 19, 2000. Objections and requests for hearings, identified by docket control number OPP–301065, must be received by EPA on or before December 18, 2000.

ADDRESSES: Written objections and hearing requests may be submitted by mail, in person, or by courier. Please follow the detailed instructions for each method as provided in Unit III. of the **SUPPLEMENTARY INFORMATION**. To ensure proper receipt by EPA, your objections and hearing requests must identify docket control number OPP–301065 in the subject line on the first page of your response.

FOR FURTHER INFORMATION CONTACT: By mail: Libby Pemberton, Registration Division (7505C), Office of Pesticide Programs, Environmental Protection Agency, 1200 Pennsylvania Ave., NW., Washington, DC 20460; telephone number: 703 308–9364; and e-mail address: pemberton.libby@epa.gov.

SUPPLEMENTARY INFORMATION:

I. General Information

A. Does this Action Apply to Me?

You may be affected by this action if you are an agricultural producer, food manufacturer, or pesticide manufacturer. Potentially affected categories and entities may include, but are not limited to:

Categories	NAICS codes	Examples of Potentially Affected Entities
Industry	111 112 311 32532	Crop production. Animal production. Food manufacturing. Pesticide manufacturing.

This listing is not intended to be exhaustive, but rather provides a guide for readers regarding entities likely to be affected by this action. Other types of entities not listed in the table could also be affected. The North American Industrial Classification System (NAICS) codes have been provided to assist you and others in determining whether or not this action might apply to certain entities. If you have questions regarding the applicability of this action to a particular entity, consult the person listed under **FOR FURTHER INFORMATION CONTACT**.

B. How Can I Get Additional Information, Including Copies of this Document and Other Related Documents?

1. *Electronically.*You may obtain electronic copies of this document, and certain other related documents that might be available electronically, from the EPA Internet Home Page at http://www.epa.gov/. To access this document, on the Home Page select ''Laws and Regulations,''' Regulations and Proposed Rules,'' and then look up the entry for this document under the ''**Federal Register**—Environmental Documents.'' You can also go directly to the **Federal Register** listings at http://www.epa.gov/fedrgstr/.

2. *In person.* The Agency has established an official record for this action under docket control number OPP–301065. The official record consists of the documents specifically referenced in this action, and other information related to this action, including any information claimed as Confidential Business Information (CBI). This official record includes the documents that are physically located in the docket, as well as the documents that are referenced in those documents. The public version of the official record does not include any information claimed as CBI. The public version of the official record, which includes printed, paper versions of any electronic comments submitted during an applicable comment period is available for inspection in the Public Information and Records Integrity Branch (PIRIB), Rm. 119, Crystal Mall #2, 1921 Jefferson Davis Hwy., Arlington, VA, from 8:30 a.m. to 4 p.m., Monday through Friday, excluding legal holidays. The PIRIB telephone number is (703) 305–5805.

II. Background and Statutory Findings

EPA issued a final rule, published in the **Federal Register** of August 25, 1998 (63 FR 45176) (FRL–6021–6), which announced that on its own initiative under section 408 of the Federal Food, Drug, and Cosmetic Act (FFDCA), 21 U.S.C. 346a, as amended by the Food Quality Protection Act of 1996 (FQPA) (Public Law 104–170) it established time-limited tolerance for the residues of phosphine resulting from the use of zinc phosphide in or on timothy, alfalfa, and clover at 0.1 ppm, with an expiration date of February 1, 2000. EPA established the tolerances because section 408(l)(6) of the FFDCA requires EPA to establish a time-limited tolerance or exemption from the requirement for a tolerance for pesticide chemical residues in food that will result from the use of a pesticide under an emergency exemption granted by EPA under section 18 of the Federal Insecticide, Fungicide, and Rodenticide Act (FIFRA). Such tolerances can be established without providing notice or period for public comment. These tolerances were subsequently extended until August 1, 2001 in the **Federal Register** of July 28, 1999 (64 FR 40769)(FRL–6090–9).

EPA received a request to extend the use of zinc phosphide on timothy, alfalfa, and clover for this year's growing season due to a continued emergency situation. After having reviewed the submission, EPA concurs that emergency conditions exist. EPA has authorized under FIFRA section 18 the use of zinc phosphide on timothy, alfalfa, and clover for control of Canada thistle and perennial sowthistle in Washington.

EPA assessed the potential risks presented by residues of zinc phosphide in or on timothy, alfalfa, and clover. In doing so, EPA considered the safety standard in FFDCA section 408(b)(2), and decided that the necessary tolerance under FFDCA section 408(l)(6) would be consistent with the safety standard and with FIFRA section 18. The data and other relevant material have been evaluated and discussed in the final rule of August 25, 1998 (63 FR 45176) (FRL–6021–6). Based on that data and information considered, the Agency reaffirms that extension of the time-limited tolerance will continue to meet the requirements of section 408(l)(6). Therefore, the time-limited tolerance is extended for an additional 1½–year period. EPA will publish a document in the **Federal Register** to remove the revoked tolerance from the Code of Federal Regulations (CFR). Although this tolerance will expire and is revoked on February 1, 2003, under FFDCA section 408(l)(5), residues of the pesticide not in excess of the amounts specified in the tolerance remaining in or on timothy, alfalfa, and clover after that date will not be unlawful, provided the pesticide is applied in a manner that was lawful under FIFRA and the application occurred prior to the revocation of the tolerances. EPA will take action to revoke these tolerances earlier if any experience with, scientific data on, or other relevant information on this pesticide indicate that the residues are not safe.

III. Objections and Hearing Requests

Under section 408(g) of the FFDCA, as amended by the FQPA, any person may file an objection to any aspect of this regulation and may also request a hearing on those objections. The EPA procedural regulations which govern the

submission of objections and requests for hearings appear in 40 CFR part 178. Although the procedures in those regulations require some modification to reflect the amendments made to the FFDCA by the FQPA of 1996, EPA will continue to use those procedures, with appropriate adjustments, until the necessary modifications can be made. The new section 408(g) provides essentially the same process for persons to ''object'' to a regulation for an exemption from the requirement of a tolerance issued by EPA under new section 408(d), as was provided in the old FFDCA sections 408 and 409. However, the period for filing objections is now 60 days, rather than 30 days.

A. What Do I Need to Do to File an Objection or Request a Hearing?

You must file your objection or request a hearing on this regulation in accordance with the instructions provided in this unit and in 40 CFR part 178. To ensure proper receipt by EPA, you must identify docket control number OPP–301065 in the subject line on the first page of your submission. All requests must be in writing, and must be mailed or delivered to the Hearing Clerk on or before December 18, 2000.

1. *Filing the request*. Your objection must specify the specific provisions in the regulation that you object to, and the grounds for the objections (40 CFR 178.25). If a hearing is requested, the objections must include a statement of the factual issues(s) on which a hearing is requested, the requestor's contentions on such issues, and a summary of any evidence relied upon by the objector (40 CFR 178.27). Information submitted in connection with an objection or hearing request may be claimed confidential by marking any part or all of that information as CBI. Information so marked will not be disclosed except in accordance with procedures set forth in 40 CFR part 2. A copy of the information that does not contain CBI must be submitted for inclusion in the public record. Information not marked confidential may be disclosed publicly by EPA without prior notice.

Mail your written request to: Office of the Hearing Clerk (1900), Environmental Protection Agency, 1200 Pennsylvania Ave., NW., Washington, DC 20460. You may also deliver your request to the Office of the Hearing Clerk in Rm. C400, Waterside Mall, 401 M St., SW., Washington, DC 20460. The Office of the Hearing Clerk is open from 8 a.m. to 4 p.m., Monday through Friday, excluding legal holidays. The telephone number for the Office of the Hearing Clerk is (202) 260–4865.

2. *Tolerance fee payment*. If you file an objection or request a hearing, you must also pay the fee prescribed by 40 CFR 180.33(i) or request a waiver of that fee pursuant to 40 CFR 180.33(m). You must mail the fee to: EPA Headquarters Accounting Operations Branch, Office of Pesticide Programs, P.O. Box 360277M, Pittsburgh, PA 15251. Please identify the fee submission by labeling it ''Tolerance Petition Fees.''

EPA is authorized to waive any fee requirement ''when in the judgement of the Administrator such a waiver or refund is equitable and not contrary to the purpose of this subsection.'' For additional information regarding the waiver of these fees, you may contact James Tompkins by phone at (703) 305–5697, by e-mail at tompkins.jim@epa.gov, or by mailing a request for information to Mr. Tompkins at Registration Division (7505C), Office of Pesticide Programs, Environmental Protection Agency, 1200 Pennsylvania Ave., NW., Washington, DC 20460.

If you would like to request a waiver of the tolerance objection fees, you must mail your request for such a waiver to: James Hollins, Information Resources and Services Division (7502C), Office of Pesticide Programs, Environmental Protection Agency, 1200 Pennsylvania Ave., NW., Washington, DC 20460.

3. *Copies for the Docket*. In addition to filing an objection or hearing request with the Hearing Clerk as described in Unit III.A., you should also send a copy of your request to the PIRIB for its inclusion in the official record that is described in Unit I.B.2. Mail your copies, identified by docket control number OPP–301065, to: Public Information and Records Integrity Branch, Information Resources and Services Division (7502C), Office of Pesticide Programs, Environmental Protection Agency, 1200 Pennsylvania Ave., NW., Washington, DC 20460. In person or by courier, bring a copy to the location of the PIRIB described in Unit I.B.2. You may also send an electronic copy of your request via e-mail to: opp-docket@epa.gov. Please use an ASCII file format and avoid the use of special characters and any form of encryption. Copies of electronic objections and hearing requests will also be accepted on disks in WordPerfect 6.1/8.0 file format or ASCII file format. Do not include any CBI in your electronic copy. You may also submit an electronic copy of your request at many Federal Depository Libraries.

B. When Will the Agency Grant a Request for a Hearing?

A request for a hearing will be granted if the Administrator determines that the material submitted shows the following: There is a genuine and substantial issue of fact; there is a reasonable possibility that available evidence identified by the requestor would, if established resolve one or more of such issues in favor of the requestor, taking into account uncontested claims or facts to the contrary; and resolution of the factual issues(s) in the manner sought by the requestor would be adequate to justify the action requested (40 CFR 178.32).

IV. Regulatory Assessment Requirements

This final rule establishes time-limited tolerances under FFDCA section 408. The Office of Management and Budget (OMB) has exempted these types of actions from review under Executive Order 12866, entitled *Regulatory Planning and Review* (58 FR 51735, October 4, 1993). This final rule does not contain any information collections subject to OMB approval under the Paperwork Reduction Act (PRA), 44 U.S.C. 3501 *et seq.*, or impose any enforceable duty or contain any unfunded mandate as described under Title II of the Unfunded Mandates Reform Act of 1995 (UMRA) (Public Law 104–4). Nor does it require any prior consultation as specified by Executive Order 13084, entitled *Consultation and Coordination with Indian Tribal Governments* (63 FR 27655, May 19, 1998); special considerations as required by Executive Order 12898, entitled *Federal Actions to Address Environmental Justice in Minority Populations and Low-Income Populations* (59 FR 7629, February 16, 1994); or require OMB review or any Agency action under Executive Order 13045, entitled *Protection of Children from Environmental Health Risks and Safety Risks* (62 FR 19885, April 23, 1997). This action does not involve any technical standards that would require Agency consideration of voluntary consensus standards pursuant to section 12(d) of the National Technology Transfer and Advancement Act of 1995 (NTTAA), Public Law 104–113, section 12(d) (15 U.S.C. 272 note). Since tolerances and exemptions that are established on the basis of a FIFRA section 18 petition under FFDCA section 408, such as the tolerances in this final rule, do not require the issuance of a proposed rule, the requirements of the Regulatory Flexibility Act (RFA) (5 U.S.C. 601 *et seq.*) do not apply. In addition, the Agency has determined that this action will not have a substantial direct effect on States, on the relationship between the national government and the States, or on the distribution of power and

responsibilities among the various levels of government, as specified in Executive Order 13132, entitled *Federalism* (64 FR 43255, August 10, 1999). Executive Order 13132 requires EPA to develop an accountable process to ensure ''meaningful and timely input by State and local officials in the development of regulatory policies that have federalism implications.'' ''Policies that have federalism implications'' is defined in the Executive Order to include regulations that have ''substantial direct effects on the States, on the relationship between the national government and the States, or on the distribution of power and responsibilities among the various levels of government.'' This final rule directly regulates growers, food processors, food handlers and food retailers, not States. This action does not alter the relationships or distribution of power and responsibilities established by Congress in the preemption provisions of FFDCA section 408(n)(4).

V. Submission to Congress and the Comptroller General

The Congressional Review Act, 5 U.S.C. 801 *et seq.*, as added by the Small Business Regulatory Enforcement Fairness Act of 1996, generally provides that before a rule may take effect, the agency promulgating the rule must submit a rule report, which includes a copy of the rule, to each House of the Congress and to the Comptroller General of the United States. EPA will submit a report containing this rule and other required information to the U.S. Senate, the U.S. House of Representatives, and the Comptroller General of the United States prior to publication of this final rule in the **Federal Register**. This final rule is not a ''major rule'' as defined by 5 U.S.C. 804(2).

List of Subjects in 40 CFR Part 180

Environmental protection, Administrative practice and procedure, Agricultural commodities, Pesticides and pests, Reporting and recordkeeping requirements.

Dated: October 6, 2000.

Peter Caulkins,

Acting Director, Registration Division, Office of Pesticide Programs.

Therefore, 40 CFR chapter I is amended as follows:

PART 180— [AMENDED]

1. The authority citation for part 180 continues to read as follows:

Authority: 21 U.S.C. 321(q), (346a) and 371.

§ 180.284 [Amended]

2. In § 180.284, amend paragraph (b) by revising the date ''8/1/01'' to read ''2/1/03.''

[FR Doc. 00–26914 Filed 10–18–00; 8:45 am]

BILLING CODE 6560–50–S

ENVIRONMENTAL PROTECTION AGENCY

40 CFR Part 180

[OPP–301070; FRL–6749–5]

RIN 2070–AB78

Tebuconazole; Extension of Tolerances for Emergency Exemptions

AGENCY: Environmental Protection Agency (EPA).

ACTION: Final rule.

SUMMARY: This regulation extends time-limited tolerances for residues of the fungicide tebuconazole in or on barley grain at 2.0 parts per million (ppm), barley hay at 20.0 ppm, barley straw at 20.0 ppm, hops at 4.0 ppm, sunflower oil at 0.4 ppm, sunflower seed at 0.2 ppm, wheat hay at 15.0 ppm, and wheat straw at 2.0 ppm for an additional 1-year period. These tolerances will expire and are revoked on December 31, 2001. This action is in response to EPA's granting of emergency exemptions under section 18 of the Federal Insecticide, Fungicide, and Rodenticide Act authorizing use of the pesticide on barley, hops, sunflowers and wheat. Section 408(l)(6) of the Federal Food, Drug, and Cosmetic Act requires EPA to establish a time-limited tolerance or exemption from the requirement for a tolerance for pesticide chemical residues in food that will result from the use of a pesticide under an emergency exemption granted by EPA under section 18 of the Federal Insecticide. Fungicide, and Rodenticide Act.

DATES: This regulation is effective October 19, 2000. Objections and requests for hearings, identified by docket control number OPP–301070, must be received by EPA on or before December 18, 2000.

ADDRESSES: Written objections and hearing requests may be submitted by mail, in person, or by courier. Please follow the detailed instructions for each method as provided in Unit III. of the **SUPPLEMENTARY INFORMATION**. To ensure proper receipt by EPA, your objections and hearing requests must identify docket control number OPP–301070 in the subject line on the first page of your response.

FOR FURTHER INFORMATION CONTACT: By mail: Stephen Schaible, Registration Division (7505C), Office of Pesticide Programs, Environmental Protection Agency, 1200 Pennsylvania Ave., NW., Washington, DC 20460; telephone number: 703 308–9362; and e-mail address: schaible.stephen@epa.gov.

SUPPLEMENTARY INFORMATION:

I. General Information

A. Does this Action Apply to Me?

You may be affected by this action if you are an agricultural producer, food manufacturer, or pesticide manufacturer. Potentially affected categories and entities may include, but are not limited to:

Categories	NAICS codes	Examples of potentially affected entities
Industry ...	111	Crop production.
	112	Animal production.
	311	Food manufacturing.
	32532	Pesticide manufacturing.

This listing is not intended to be exhaustive, but rather provides a guide for readers regarding entities likely to be affected by this action. Other types of entities not listed in the table could also be affected. The North American Industrial Classification System (NAICS) codes have been provided to assist you and others in determining whether or not this action might apply to certain entities. If you have questions regarding the applicability of this action to a particular entity, consult the person listed under **FOR FURTHER INFORMATION CONTACT**.

B. How Can I Get Additional Information, Including Copies of this Document and Other Related Documents?

1. *Electronically.* You may obtain electronic copies of this document, and certain other related documents that might be available electronically, from the EPA Internet Home Page at http://www.epa.gov/. To access this document, on the Home Page select ''Laws and Regulations,'' ''Regulations and Proposed Rules,'' and then look up the entry for this document under the ''**Federal Register**—Environmental Documents.'' You can also go directly to the **Federal Register** listing at http://www.epa.gov/fedrgstr/.

2. *In person.* The Agency has established an official record for this action under docket control number OPP–301070. The official record consists of the documents specifically referenced in this action, and other information related to this action,

including any information claimed as Confidential Business Information (CBI). This official record includes the documents that are physically located in the docket, as well as the documents that are referenced in those documents. The public version of the official record does not include any information claimed as CBI. The public version of the official record, which includes printed, paper versions of any electronic comments submitted during an applicable comment period is available for inspection in the Public Information and Records Integrity Branch (PIRIB), Rm. 119, Crystal Mall #2, 1921 Jefferson Davis Hwy., Arlington, VA, from 8:30 a.m. to 4 p.m., Monday through Friday, excluding legal holidays. The PIRIB telephone number is (703) 305–5805.

II. Background and Statutory Findings

EPA issued a final rule, published in the **Federal Register** of June 20, 1997 (62 FR 33550) (FRL–5725–7), which announced that on its own initiative under section 408 of the Federal Food, Drug, and Cosmetic Act (FFDCA), 21 U.S.C. 346a, as amended by the Food Quality Protection Act of 1996 (FQPA) (Public Law 104–170) it established time-limited tolerances for the residues of tebuconazole in or on barley grain at 2.0 ppm, barley hay at 20.0 ppm, barley straw at 20.0 ppm, wheat hay at 15.0 ppm, and wheat straw at 2.0 ppm, with an expiration date of June 30, 1998.

EPA issued a final rule, published in the **Federal Register** of October 29, 1997 (62 FR 56089) (FRL–5752–4), which announced that on its own initiative under section 408 of the Federal Food, Drug, and Cosmetic Act (FFDCA), 21 U.S.C. 346a, as amended by the Food Quality Protection Act of 1996 (FQPA) (Public Law 104–170) it established time-limited tolerances for the residues of tebuconazole in or on sunflower oil and sunflower seed at 0.4 ppm and 0.2 ppm, respectively, with an expiration date of September 30, 1998.

EPA issued a final rule, published in the **Federal Register** of December 2, 1998 (63 FR 66449) (FRL–6036–3), which announced that on its own initiative under section 408 of the Federal Food, Drug, and Cosmetic Act (FFDCA), 21 U.S.C. 346a, as amended by the Food Quality Protection Act of 1996 (FQPA) (Public Law 104–170) it established a time-limited tolerance for the residues of tebuconazole in or on hops at 4.0 ppm, with an expiration date of December 31, 2000.

EPA established these tolerances because section 408(l)(6) of the FFDCA requires EPA to establish a time-limited tolerance or exemption from the requirement for a tolerance for pesticide chemical residues in food that will result from the use of a pesticide under an emergency exemption granted by EPA under section 18 of the Federal Insecticide, Fungicide, and Rodenticide Act (FIFRA). Such tolerances can be established without providing notice or period for public comment.

EPA received requests to extend the use of tebuconazole on barley, hops, sunflowers and wheat for this year's growing season due to continued non-routine situations for growers of these crops. Idaho, Oregon and Washington requested emergency exemptions to control stripe rust in barley, and Oregon also requested the use of tebuconazole to control stripe and leaf rust in wheat; currently registered alternatives do not allow application at a sufficiently late stage of growth to control the disease. Michigan, Minnesota, North Dakota and South Dakota requested emergency exemptions to control Fusarium head blight in barley and/or wheat, as the disease continues to be a problem for growers in those states. Buildup of rust inoculum and continued wet and cool weather creates a potential emergency situation for sunflower growers in Colorado, Kansas, Nebraska and North Dakota. Idaho, Oregon and Washington requested the use on hops to control powdery mildew as it is claimed there are no effective alternatives currently registered. After having reviewed these submissions, EPA concurs that emergency conditions exist. EPA has authorized under FIFRA section 18 the use of tubconazole on barley, hops, sunflowers and wheat for control of the above pests in the states listed above.

EPA assessed the potential risks presented by residues of tebuconazole in or on barley, hops, sunflowers and wheat. In doing so, EPA considered the safety standard in FFDCA section 408(B)(2), and decided that the necessary tolerances under FFDCA section 408(l)(6) would be consistent with the safety standard and with FIFRA section 18. The data and other relevant material have been evaluated and discussed in the final rules of June 20, 1997; October 29, 1997; and December 2, 1998. Based on those data and information considered, the Agency reaffirms that extension of the time-limited tolerances will continue to meet the requirements of section 408(l)(6). Therefore, the time-limited tolerances are extended for an additional 1-year period. EPA will publish a document in the **Federal Register** to remove the revoked tolerances from the Code of Federal Regulations (CFR). Although these tolerances will expire and are revoked on December 31, 2001, under FFDCA section 408(l)(5), residues of the pesticide not in excess of the amounts specified in the tolerances remaining in or on barley grain, barley hay, barley straw, hops, sunflower oil, sunflower seed, wheat hay, and wheat straw after that date will not be unlawful, provided the pesticide is applied in a manner that was lawful under FIFRA and the application occurred prior to the revocation of the tolerances. EPA will take action to revoke these tolerances earlier if any experience with, scientific data on, or other relevant information on this pesticide indicate that the residues are not safe.

III. Objections and Hearing Requests

Under section 408(g) of the FFDCA, as amended by the FQPA, any person may file an objection to any aspect of this regulation and may also request a hearing on those objections. The EPA procedural regulations which govern the submission of objections and requests for hearings appear in 40 CFR part 178. Although the procedures in those regulations require some modification to reflect the amendments made to the FFDCA by the FQPA of 1996. EPA will continue to use those procedures, with appropriate adjustments, until the necessary modifications can be made. The new section 408(g) provides essentially the same process for persons to ''object'' to a regulations for an exemption from the requirement of a tolerance issued by EPA under new section 408(d), as was provided in the old FFDCA sections 408 and 409. However, the period for filing objections is now 60 days, rather than 30 days.

A. What Do I Need to Do To File an Objection or Request a Hearing?

You must file your objection or request a hearing on this regulation in accordance with the instructions provided in this unit and in 40 CFR part 178. To ensure proper receipt by EPA, you must identify docket control number OPP–301070 in the subject line on the first page of your submission. All requests must be in writing, and must be mailed or delivered to the Hearing Clerk on or before December 18, 2000.

1. *Filing the request.* Your objection must specify the specific provisions in the regulation that you object to, and the grounds for the objections (40 CFR 178.25). If a hearing is requested, the objections must include a statement of the factual issue(s) on which a hearing is requested, the requestor's contentions on such issues, and a summary of any evidence relied upon by the objector (40 CFR 178.27). Information submitted in connection with an objection or hearing request may be claimed confidential by marking any part or all of that

information as CBI. Information so marked will not be disclosed except in accordance with procedures set forth in 40 CFR part 2. A copy of the information that does not contain CBI must be submitted for inclusion in the public record. Information not marked confidential may be disclosed publicly by EPA without prior notice.

Mail your written request to: Office of the Hearing Clerk (1900), Environmental Protection Agency, 1200 Pennsylvania Ave., NW., Washington, DC 20460. You may also deliver your request to the Office of the Hearing Clerk in Rm. C400, Waterside Mall, 401 M St., SW., Washington, DC 20460. The Office of the Hearing Clerk is open from 8 a.m. to 4 p.m., Monday through Friday, excluding legal holidays. The telephone number for the Office of the Hearing Clerk is (202) 260–4865.

2. *Tolerance fee payment.* If you file an objection or request a hearing, you must also pay the fee prescribed by 40 CFR 180.33(i) or request a waiver of that fee pursuant to 40 CFR 180.33(m). You must mail the fee to: EPA Headquarters Accounting Operations Branch, Office of Pesticide Programs, P.O. Box 360277M, Pittsburgh, PA 15251. Please identify the fee submission by labeling it ''Tolerance Petition Fees.''

EPA is authorized to waive any fee requirement ''when in the judgment of the Administrator such a waiver or refund is equitable and not contrary to the purpose of this subsection.'' For additional information regarding the waiver of these fees, you may contact James Tompkins by phone at (703) 305–5697, by e-mail at tompkins.jim@epa.gov, or by mailing a request for information to Mr. Tompkins at Registration Division (7505C), Office of Pesticide Programs, Environmental Protection Agency, 1200 Pennsylvania Ave., NW., Washington, DC 20460.

If you would like to request a waiver of the tolerance objection fees, you must mail your request for such a waiver to: James Hollins, Information Resources and Services Division (7502C), Office of Pesticide Programs, Environmental Protection Agency, 1200 Pennsylvania Ave., NW., Washington, DC 20460.

3. *Copies for the Docket.* In addition to filing an objection or hearing request with the Hearing Clerk as described in Unit III.A., you should also send a copy of your request to the PIRIB for its inclusion in the official record that is described in Unite I.B.2. Mail your copies, identified by docket control number OPP–301070, to: Public Information and Records Integrity Branch, Information Resources and Services Division (7502C), Office of Pesticide Programs, Environmental Protection Agency, 1200 Pennsylvania Ave., NW., Washington, DC 20460. In person or by courier, bring a copy to the location of the PIRIB described in Unit I.B.2. You may also send an electronic copy of your request via e-mail to: opp-docket@epa.gov. Please use an ASCII file format and avoid the use of special characters and any form of encryption. Copies of electronic objections and hearing requests will also be accepted on disks in WordPerfect 6.1/8.0 file format or ASCII file format. Do not include any CBI in your electronic copy. You may also submit an electronic copy of your request at many Federal Depository Libraries.

B. When Will the Agency Grant a Request for a Hearing?

A request for a hearing will be granted if the Administrator determines that the material submitted shows the following: There is a genuine and substantial issue of fact; there is a reasonable possibility that available evidence identified by the requestor would, if established resolve one or more of such issues in favor of the requestor, taking into account uncontested claims or facts to the contrary; and resolution of the factual issue(s) in the manner sought by the requestor would be adequate to justify the action requested (40 CFR 178.32).

IV. Regulatory Assessment Requirements

This final rule extends the expiration date of time-limited tolerances under FFDCA section 408. The Office of Management and Budget (OMB) has exempted these types of actions from review under Executive Order 12866, entitled Regulatory Planning and Review (58 FR 51735, October 4, 1993). This final rule does not contain any information collections subject to OMB approval under the Paperwork Reduction Act (PRA), 44 U.S.C. 3501 *et seq.,* or impose any enforceable duty or contain any unfunded mandate as described under Title II of the Unfunded Mandates Reform Act of 1995 (UMRA) (Public Law 104–4). Nor does it require any prior consultation as specified by Executive Order 13084, entitled *Consultation and Coordination with Indian Tribal Governments* (63 FR 27655, May 19, 1998); special considerations as required by Executive Order 12898, entitled *Federal Actions to Address Environmental Justice in Minority Populations and Low-Income Populations* (59 FR 7629, February 16, 1994); or require OMB review or any Agency action under Executive Order 13045, entitled *Protection of Children from Environmental Health Risks and Safety Risks* (62 FR 19885, April 23, 1997). This action does not involve any technical standards that would require Agency consideration of voluntary consensus standards pursuant to section 12(d) of the National Technology Transfer and Advancement Act of 1995 (NTTAA), Public Law 104–113, section 12(d) (15 U.S.C. 272 note). Since tolerances and exemptions that are established on the basis of a FIFRA section 18 petition under FFDCA section 408, such as the tolerances in this final rule, do not require the issuance of a proposed rule, the requirements of the Regulatory Flexibility Act (RFA) (5 U.S.C. 601 *et seq.*) do not apply. In addition, the Agency has determined that this action will not have a substantial direct effect on States, on the relationship between the national government and the States, or on the distribution of power and responsibilities among the various levels of government, as specified in Executive Order 13132 entitled *Federalism* (64 FR 43255, August 10, 1999). Executive Order 13132 requires EPA to develop an accountable process to ensure ''meaningful and timely input by State and local officials in the development of regulatory policies that have federalism implications.'' ''Policies that have federalism implications'' is defined in the Executive Order to include regulations that have ''substantial direct effects on the States, on the relationship between the national government and the States, or on the distribution of power and responsibilities among the various levels of government.'' This final rule directly regulates growers, food processors, food handlers and food retailers, not States. This action does not alter the relationships or distribution of power and responsibilities established by Congress in the preemption provisions of FFDCA section 408(n)(4).

V. Submission to Congress and the Comptroller General

The Congressional Review Act, 5 U.S.C. 801 *et seq.,* as added by the Small Business Regulatory Enforcement Fairness Act of 1996, generally provides that before a rule may take effect, the agency promulgating the rule must submit a rule report, which includes a copy of the rule, to each House of the Congress and to the Comptroller General of the United States. EPA will submit a report containing this rule and other required information to the U.S. Senate, the U.S. House of Representatives, and the Comptroller General of the United States prior to publication of this final rule in the **Federal Register**. This final rule is not a ''major rule'' as defined by 5 U.S.C. 804(2).

List of Subjects in 40 CFR Part 180

Environmental protection, Administrative practice and procedure, Agricultural commodities, Pesticides and pests, Reporting and recordkeeping requirements.

Dated: October 3. 2000.

James Jones,

Director, Registration Division, Office of Pesticide Programs.

Therefore, 40 CFR Chapter I is amended as follows:

PART 180—[AMENDED]

1. The authority citation for part 180 continues to read as follows:

Authority: 21 U.S.C. 321(q), (346a) and 371.

§ 180.474 [Amended]

2. In § 180.474, the table in paragraph (b)(1), the entries for ''barley, grain''; ''barley, hay''; ''barley, straw''; ''hops''; ''sunflower oil''; ''sunflower seed''; ''wheat, hay''; and ''wheat, straw'', revise the ''Expiration/revocation date'', ''12/31/00'' to read ''12/31/01.''

[FR Doc. 00–26915 Filed 10–18–00; 8:45 am]

BILLING CODE 6560–50–M

GENERAL SERVICES ADMINISTRATION

41 CFR Chapter 301

[FTR Amendment 94]

RIN 3090–AH28

Federal Travel Regulation; Maximum Per Diem Rates

AGENCY: Office of Governmentwide Policy, GSA.

ACTION: Final rule; correction.

SUMMARY: This document corrects entries listed in the prescribed maximum per diem rates for locations within the continental United States (CONUS) contained in a final rule appearing in Part IV of the **Federal Register** of Friday, September 1, 2000 (65 FR 53472).

EFFECTIVE DATE: October 1, 2000.

FOR FURTHER INFORMATION CONTACT: Joddy P. Garner, Office of Governmentwide Policy (MTT), Washington, DC 20405, telephone 202–501–4857.

SUPPLEMENTARY INFORMATION: In rule document 00–22077 beginning on page 53472 in the issue of Friday, September 1, 2000, make the following corrections:

Appendix A to Chapter 301—[Corrected]

1. On page 53477, under the State of Florida, city of Ocala, column two (County and/or other defined location) is corrected to read ''Marion''.

2. On page 53482, under the State of New Jersey, city of Edison, column two (County and/or other defined location) is corrected to read ''Middlesex (except Piscataway)''.

3. On page 53482, under the State of New Jersey, cities of Piscataway/Belle Mead, column two (County and/or other defined location) is corrected to read ''Somerset; and City limits of Piscataway''.

4. On page 53483, under the State of New York, city of Monroe, column two (County and/or other defined location) is corrected to read ''Orange (except West Point)''.

5. On page 53484, under the State of North Carolina, city of New Bern, column two (County and/or other defined location) is corrected to read ''City limits of New Bern''.

6. On page 53485, under the State of Rhode Island, a new entry is added prior to the city of East Greenwich, to read (column one) ''Block Island''; (column two) ''Block Island only''; (column three) ''55''; (column four) ''30''; (column five) ''85''.

7. On page 53485, under the State of Rhode Island, city of Newport, column two (County and/or other defined location) is corrected to read ''Newport (except Block Island)''.

8. On page 53485, under the State of Rhode Island, city of North Kingstown, column two (County and/or other defined location) is corrected to read ''Washington''.

9. On page 53487, under the State of Virginia, city of Virginia Beach, the seasonal dates in column one are corrected to read ''(April 1–October 31) (November 1–March 31)''.

10. On page 53488, under the State of Wisconsin, city of Sheboygan, column two (County and/or other defined location) is corrected to read ''Sheboygan''.

Pages 53477, 53482, 53483, 53484, 53485, 53487, and 53488, as corrected, read as follows:

Appendix A to Chapter 301—Prescribed Maximum Per Diem Rates for CONUS

* * * * *

BILLING CODE 6820–34–P

Per diem locality: Key city[1]	County and/or other defined location [2, 3]	Maximum lodging amount **(room rate only—no taxes)** (a)	+	M&IE rate (b)	=	Maximum per diem rate [4] (c)
Miami	Dade					
(January 1-April 15)		89		42		131
(April 16-December 31)		75		42		117
Naples	Collier					
(December 16-April 15)		109		38		147
(April 16-December 15)		55		38		93
Ocala	Marion	59		30		89
Orlando	Orange	86		42		128
	Palm Beach					
(January 1-April 30)		105		46		151
(May 1-December 31)		69		46		115
Panama City	Bay					
(March 1-September 15)		72		38		110
(September 16-February 28)		55		38		93
Punta Gorda	Charlotte					
(December 15-April 15)		75		38		113
(April 16-December 14)		55		38		93
Sarasota	Sarasota					
(January 1-April 30)		95		38		133
(May 1-December 31)		55		38		93
Sebring	Highlands	64		30		94
St. Augustine	St. Johns					
(February 1-May 31)		72		38		110
(June 1-January 31)		63		38		101
Stuart	Martin	57		38		95
Tallahassee	Leon	65		34		99
Tampa/St. Petersburg	Pinellas and Hillsborough					
(January 1-April 30)		105		38		143
(May 1-December 31)		89		38		127
Vero Beach	Indian River					
(December 15-April 15)		80		38		118
(April 16-December 14))		62		38		100
GEORGIA						
Albany	Dougherty	57		34		91
Athens	Clarke	69		34		103
Atlanta	Fulton and Gwinnett	93		38		131
Clayton County	Clayton County	64		30		94
Cobb County	Cobb County	78		34		112
Columbus	Muscogee	56		34		90
Conyers	Rockdale	69		34		103
DeKalb County	DeKalb County	78		34		112
Savannah	Chatham	71		38		109
IDAHO						
Boise	Ada	61		38		99

Per diem locality: Key city[1]	County and/or other defined location [2, 3]	Maximum lodging amount **(room rate only—no taxes)** (a)	+	M&IE rate (b)	=	Maximum per diem rate [4] (c)
NEW HAMPSHIRE						
Concord	Merrimack					
(May 1-October 31)		68		34		102
(November 1-April 30)		58		34		92
Conway	Carroll	89		38		127
Durham	Strafford	89		30		119
Hanover/Sullivan County	Grafton and Sullivan County	96		42		138
Laconia	Belknap	73		34		107
Manchester	Hillsborough	89		34		123
Newington	Rockingham County; Pease AFB (except Portsmouth)					
(July 1-October 31)		81		42		123
(November 1-June 30)		65		42		107
Portsmouth	City limits of Portsmouth (see Rockingham County)					
(January 1-October 15)		85		42		127
(October 16-December 31)		69		42		111
NEW JERSEY						
Atlantic City	Atlantic					
(June 1-November 30)		100		42		142
(December 1-May 31)		79		42		121
Cape May	Cape May (except Ocean City)					
(June 1- November 30)		155		42		197
(December 1 - May 31)		95		42		137
Cherry Hill/Camden/ Moorestown	Camden and Burlington	74		42		116
Eatontown	Monmouth County; Fort Monmouth	84		38		122
Edison	Middlesex (except Piscataway)	65		30		95
Flemington	Hunterdon	80		34		114
Freehold	City limits of Freehold					
(July 1-August 31)		95		34		129
(September 1-June 30)		80		34		114
Millville	Cumberland	58		30		88
Newark	Essex, Bergen, Hudson and Passaic	100		42		142
Ocean City	City limits of Ocean City (see Cape May County)					
(June 15-September 15)		215		38		253
(September 16-June 14)		80		38		118
Parsippany/Picatinney Arsenal/Dover	Morris	114		38		152
Piscataway/Belle Mead	Somerset; and City limits of Piscataway	144		38		182
Princeton/Trenton	Mercer County	139		42		181
Tom's River	Ocean					
(May 15-September 15)		89		38		127
(September 16-May 14)		65		38		103
Union County	Union County	100		38		138
NEW MEXICO						

Per diem locality:		Maximum lodging amount **(room rate only—no taxes)** (a)	+	M&IE rate (b)	=	Maximum per diem rate [4] (c)
Key city[1]	County and/or other defined location [2], [3]					
Albuquerque	Bernalillo	65		38		103
Cloudcroft	Otero					
(June 1-October 31)		74		30		104
(November 1-May 31)		65		30		95
Los Alamos	Los Alamos	71		34		105
Santa Fe	Santa Fe	90		46		136
Taos	Taos	75		34		109
NEW YORK						
Albany	Albany	74		42		116
The Bronx/Brooklyn/Queens	The boroughs of The Bronx, Brooklyn and Queens	170		46		216
Buffalo	Erie	78		42		120
Glens Falls	Warren					
(June 1-September 30)		74		34		108
(October 1-May 31)		55		34		89
Ithaca	Tompkins	57		34		91
Kingston	Ulster	79		38		117
Lake Placid	Essex					
(June 15-October 15)		86		38		124
(October 16-June 14)		59		38		97
Manhattan	Manhattan	198		46		244
Monroe	Orange (except West Point)	59		30		89
Nassau County/Great Neck	Nassau County	190		42		232
Niagara Falls	Niagara					
(May 1-October 31)		79		34		113
(November 1-April 30)		55		34		89
Nyack/Palisades	Rockland					
(April 1-September 30)		67		38		105
(October 1-March 31)		57		38		95
Owego	Tioga	73		30		103
Poughkeepsie	Dutchess	74		38		112
Rochester	Monroe					
(May 1-October 31)		65		42		107
(November 1-April 30)		58		42		100
Saratoga Springs	Saratoga					
(July 1-October 31)		95		38		133
(November 1-June 30)		75		38		113
Staten Island	Richmond	120		42		162
Suffolk County	Suffolk County	149		38		187
Syracuse	Onondaga	70		34		104
Tarrytown	Westchester (except White Plains)	114		42		156
Waterloo/Romulus	Seneca					
(June 15-September 15)		89		34		123
(September 16-June 14)		69		34		103
Watkins Glen	Schuyler	59		34		93
West Point	City limits of West Point (see Orange County)	121		34		155
White Plains	City limits of White Plains (see Westchester County)	165		42		207

Per diem locality:		Maximum lodging amount **(room rate only—no taxes)** (a)	+	M&IE rate (b)	=	Maximum per diem rate [4] (c)
Key city[1]	County and/or other defined location [2], [3]					
NORTH CAROLINA						
Atlantic Beach	City limits of Atlantic Beach					
(June 1-August 31)		64		30		94
(September 1-May 31)		55		30		85
Chapel Hill	Orange	80		38		118
Charlotte	Mecklenburg	71		38		109
Fayetteville	Cumberland	63		34		97
Greensboro	Guilford	67		38		105
Havelock	Craven (except New Bern)	60		30		90
Kill Devil	Dare					
(May 1-September 30)		114		38		152
(October 1-February 28)		75		38		113
(March 1-April 30)		55		38		93
New Bern	City limits of New Bern	62		34		96
Raleigh	Wake	74		38		112
Research Triangle Park/Durham	Durham	85		42		127
Wilmington	New Hanover	58		34		92
Winston-Salem	Forsyth	64		38		102
NORTH DAKOTA (See footnote 5)						
OHIO						
Akron	Summit	72		38		110
Bellevue	Huron	72		30		102
Cambridge	Guernsey					
(May 1-September 15)		68		34		102
(September 16-April 30)		59		34		93
Cincinnati	Hamilton and Warren	69		46		115
Cleveland	Cuyahoga	86		42		128
Columbus	Franklin	75		38		113
Dayton	Montgomery, Wright-Patterson AFB	65		30		95
Fairborn	Greene	66		34		100
Geneva/Hamilton	Ashtabula and Butler	59		34		93
Lancaster	Fairfield	66		30		96
Port Clinton/Oak Harbor	Ottawa					
(June 1-September 5)		95		34		129
(September 6-May 31)		69		34		103
Sandusky	Erie					
(May 1-September 5)		85		38		123
(September 6-April 30)		55		38		93
Toledo	Lucas	69		30		99
OKLAHOMA						
Oklahoma City	Oklahoma	65		38		103
OREGON						
Ashland	Jackson	59		42		101
Beaverton	Washington	59		38		97
Bend	Deschutes					
(June 1-September 30)		69		38		107
(October 1-May 31)		59		38		97

Per diem locality:		Maximum lodging amount **(room rate only—no taxes)** (a)	+	M&IE rate (b)	=	Maximum per diem rate [4] (c)
Key city[1]	County and/or other defined location [2], [3]					
Clackamas	Clackamas	64		34		98
Crater Lake	Klamath	74		38		112
Eugene	Lane (except Florence)	62		38		100
Florence	City limits of Florence (see Lane County)	80		34		114
Lincoln City/Newport	Lincoln	65		34		99
Portland	Multnomah	77		38		115
Seaside	Clatsop					
(July 1-August 31)		79		34		113
(September 1-June 30)		59		34		93
PENNSYLVANIA						
Chester/Radnor/Essington	Delaware (except Wayne)	75		34		109
Easton	Northampton	68		34		102
Erie	Erie	65		30		95
Gettysburg	Adams					
(May 1-October 31)		80		34		114
(November 1-April 30)		55		34		89
Harrisburg	Daulphin (except Hershey)	79		42		121
Hershey	City limits of Hershey (see Daulphin County)					
(June 1-September 15)		125		42		167
(September 16-May 31)		55		42		97
King of Prussia/Ft. Washington/Bala Cynwyd	Montgomery	84		42		126
Lancaster	Lancaster	69		38		107
Malvern/Downington/Valley Forge	Chester	83		38		121
Mechanicsburg	Cumberland	74		34		108
Philadelphia	Philadelphia	118		46		164
Pittsburgh	Allegheny	79		46		125
Reading	Berks	75		38		113
Scranton	Lackawanna	60		30		90
Warminster	Bucks County; Naval Air Development Center	75		42		117
Wayne	City limits of Wayne (see Delaware County)	100		42		142
RHODE ISLAND						
Block Island	Block Island only	55		30		85
East Greenwich	Kent County; Naval Construction Battalion Center, Davisville	69		38		107
Newport	Newport (except Block Island)					
(April 1-December 31)		111		42		153
(January 1-March 31)		77		42		119
North Kingstown	Washington	89		30		119
Providence	Providence	79		42		121
SOUTH CAROLINA						
Aiken	Aiken	65		30		95
Charleston/Berkeley	Charleston and Berkeley	99		42		141
Columbia	Richland	65		30		95
Greenville	Greenville	56		38		94
Hilton Head	Beaufort					
(March 15-September 30)		96		42		138
(October 1-March 14)		75		42		117
Myrtle Beach	Horry County; Myrtle Beach AFB					

Per diem locality: Key city[1]	County and/or other defined location [2], [3]	Maximum lodging amount **(room rate only—no taxes)** (a)	+	M&IE rate (b)	=	Maximum per diem rate [4] (c)
Waco	McLennan	57		30		87
UTAH						
Bullfrog	Garfield	73		30		103
Cedar City	Iron					
(June 1-September 4)		71		34		105
(September 5-May 31)		55		34		89
Moab	Grand					
(March 15-October 31)		76		34		110
(November 1-March 14)		59		34		93
Ogden/Layton/Davis	Weber and Davis	69		34		103
Park City	Summit					
(December 15-March 31)		145		46		191
(April 1-December 14)		69		46		115
Provo	Utah	60		38		98
Salt Lake City	Salt Lake and Dugway Proving Ground and Tooele Army Depot	75		42		117
VERMONT						
Burlington/St. Albans	Chittenden and Franklin	82		38		120
Manchester	Bennington	68		42		110
Middlebury	Addison	68		38		106
Montpelier	Washington	62		30		92
White River Junction	Windsor					
(September 15-October 31)		69		34		103
(November 1-September 14)		55		34		89
VIRGINIA						
(For the cities of Alexandria, Fairfax, and Falls Church, and the counties of Arlington, Fairfax, and Loudoun, see District of Columbia.)						
Charlottesville*		60		42		102
Lynchburg*		62		38		100
Manassas	Prince William (except Woodbridge)	64		34		98
Richmond*	Chesterfield and Henrico Counties, also Defense Supply Center	77		38		115
Roanoke*		59		34		93
Virginia Beach*	Virginia Beach (also Norfolk, Portsmouth and Chesapeake)*					
(April 1-October 31)		109		38		147
(November 1-March 31)		55		38		93
Wallops Island	Accomack					
(June 1-September 5)		89		34		123
(September 6-May 31)		69		34		103
Williamsburg*	Williamsburg (also Hampton, Newport News, York County, Naval Weapons Station, Yorktown)*					
(April 1-October 31)		99		38		137
(November 1-March 31)		59		38		97
Wintergreen	Nelson	125		46		171

Per diem locality: Key city[1]	County and/or other defined location [2, 3]	Maximum lodging amount **(room rate only—no taxes)** (a)	+	M&IE rate (b)	=	Maximum per diem rate [4] (c)
Woodbridge	City limits of Woodbridge	69		38		107
*Denotes independent cities.						
WASHINGTON						
Anacortes	Skagit and Island	59		38		97
Bremerton	Kitsap	61		34		95
Everett	Snohomish (except Lynnwood)	59		38		97
Friday Harbor	San Juan					
(May 1-September 30)		95		42		137
(October 1-April 30)		65		42		107
Lynnwood	City limits of Lynnwood (see Snohomish County)	89		34		123
Ocean Shores	Grays Harbor					
(April 1-September 30)		82		38		120
(October 1-March 31)		55		38		93
Olympia/Tumwater	Thurston	58		38		96
Port Angeles	City limits of Port Angeles (see Clallam County)	65		38		103
Port Townsend	Jefferson	78		34		112
Seattle	King	109		46		155
Sequim	Clallam (except Port Angeles)	60		34		94
Spokane	Spokane	63		38		101
WEST VIRGINIA						
Berkeley Springs	Morgan	69		34		103
Charleston	Kanawha	77		38		115
Martinsburg	Berkeley	59		30		89
Morgantown	Monongalia	64		34		98
Shepherdstown	Jefferson	65		38		103
Wheeling	Ohio	66		34		100
WISCONSIN						
Brookfield	Waukesha	66		38		104
Green Bay	Brown	59		34		93
Lake Geneva	Walworth					
(June 1-September 4)		85		38		123
(September 5-May 31)		66		38		104
Madison	Dane	60		38		98
Milwaukee	Milwaukee	72		42		114
Racine	Racine	70		30		100
Sheboygan	Sheboygan	59		30		89
Sturgeon Bay	Door					
(May 15-October 15)		64		34		98
(October 16-May 14)		56		34		90
Wisconsin Dells	Columbia					
(June 1-September 30)		89		38		127
(October 1-May 31)		55		38		93
WYOMING						
Cody	Park					

* * * * *

Dated: October 11, 2000.

William T. Rivers,

Director, Travel Management Policy.

[FR Doc. 00–26619 Filed 10–18–00; 8:45 am]

BILLING CODE 6820–34–C

DEPARTMENT OF HEALTH AND HUMAN SERVICES

Health Care Financing Administration

42 CFR Parts 409, 410, 489, and 498

[HCFA–3045–F]

Medicare Program; Removal of the Requirements for the Cardiac Pacemaker Registry

AGENCY: Health Care Financing Administration, HHS.

ACTION: Final rule.

SUMMARY: This final rule eliminates all requirements and references regarding the Cardiac Pacemaker Registry (the Registry) in our regulations. It conforms to the Food and Drug Administration's (FDA) recent final rule that required any physician and any provider of services who requests or receives Medicare payment for the implantation, removal, or replacement of permanent cardiac pacemaker devices and pacemaker leads to submit certain information to the Registry. We used the information to administer Medicare payment for these devices. This rule implements an Act to Repeal An Unnecessary Medical Device Reporting Requirement passed by Congress to eliminate duplicative and unnecessary reporting.

EFFECTIVE DATE: This regulation is effective October 19, 2000.

FOR FURTHER INFORMATION CONTACT: Shana Olshan, (410) 786–3122.

SUPPLEMENTARY INFORMATION:

I. Background

On July 23, 1987, we and the FDA jointly issued a final rule establishing the national cardiac pacemaker registry (52 FR 27756), as mandated by the Deficit Reduction Act of 1984 (Public Law 98–369). The final rule for the Registry was codified in 21 CFR part 805. The scope of the regulation provided that the FDA establish a nationwide registry for cardiac pacemakers and pacemaker leads. The FDA used the information submitted to the Registry to track the performance of permanent pacemakers and pacemaker leads and to perform studies and analysis regarding the use of the devices. They transmitted data to us to administer the Medicare program, and to other Federal components to carry out statutory responsibilities.

On October 2, 1996, An act to Repeal An Unnecessary Medical Device Reporting Requirement (Public Law 104–224), which amended title XVIII of the Social Security Act (the Act) (42 U.S.C. 1395), became law. The purpose of the new law was to remove section 1862(h) (42 U.S.C. 1395y(h)) of the Act to eliminate duplicative and unnecessary reporting. The registry was considered duplicative with the requirements of section 519(e) of the Federal Food, Drug, and Cosmetic Act (21 U.S.C. 360i(e)), which requires that manufacturers track and collect data for certain devices, including permanently implanted pacemakers and pacemaker leads, from the manufacturer, through the distribution chain, to the patient using the device. In accordance with this act, the FDA published a final rule in the **Federal Register** revoking the Registry on November 24, 1999 (64 FR 66105).

II. Provisions of the Regulation

In response to the FDA revocation of the Registry, we are removing all requirements and references regarding the Registry that appear in our regulations. These appear in 42 CFR Parts 409, 410, 489, and 498. We are revising § 409.1(e) to remove the phrase ''* * * and section 1862(h) requires a registry of pacemakers.'' We are also removing §§ 409.19 and 410.64, which deal exclusively with requirements for providers and physicians related to the Registry. And we are removing and reserving §§ 489.21(g) and 498.3(b)(10), which contain cross references to §§ 409.19 and 410.64.

III. Waiver of Proposed Rulemaking and Delayed Effective Date

Under section 553(b)(B) of the Administrative Procedure Act (APA), we, for good cause, find that notice and comment procedures are unnecessary because we are not exercising discretion in removing the references to the Registry. And, under section 553(d)(3) of the APA, we, for good cause, waive the 30-day delay in the effective date because Public Law 104–224 was self-implementing.

IV. Regulatory Impact Analysis

We have reviewed this notice under the threshold criteria of Executive Order 13132. We have determined that this final rule will not have substantial direct effects on the states, the relationship between the national government and the States, or the distribution of power and responsibilities among the various levels of government.

Section 202 of the Unfunded Mandates Reform Act of 1995 requires that agencies assess anticipated costs and benefits before issuing any rule that may result in an expenditure by State, local, or tribal governments, in the aggregate, or by the private sector, of $100 million in any one year. This final rule will not have an effect on the governments mentioned, and the private sector costs will not be greater than the $100 million threshold.

We have examined the impacts of this rule as required by Executive Order 12866 (September 1993, Regulatory Planning and Review) and the Regulatory Flexibility Act (RFA) (September 19, 1980 Public Law 96–354). Executive Order 12866 directs agencies to assess all costs and benefits of available regulatory alternatives and, if regulation is necessary, to select regulatory approaches that maximize net benefits (including potential economic, environmental, public health and safety effects, distributive impacts, and equity). A regulatory impact analysis (RIA) must be prepared for major rules with economically significant effects ($100 million or more annually). This rule is not a major rule because costs will not meet this $100 million threshold. The RFA requires agencies to analyze options for regulatory relief of small businesses. For purposes of the RFA, small entities include small businesses, nonprofit organizations and government agencies. Most hospitals and most other providers and suppliers are small entities, either by nonprofit status or by having revenues of $5 million or less annually. Individuals and States are not included in the definition of a small entity.

In addition, section 1102(b) of the Act requires us to prepare a regulatory impact analysis if a rule may have a significant impact on the operations of a substantial number of small rural hospitals. This analysis must conform to the provisions of section 604 of the RFA. For purposes of section 1102(b) of the Act, we define a small rural hospital as a hospital that is located outside of a Metropolitan Statistical Area and has fewer than 50 beds.

In accordance with the provisions of Executive Order 12866, this final rule was not reviewed by the Office of Management and Budget.

List of Subjects

42 CFR Part 409

Health facilities, Medicare.

42 CFR Part 410

Health facilities, Health professions, Kidney diseases, Laboratories, Medicare, Rural areas, X-rays.

42 CFR Part 489

Health facilities, Medicare, Reporting and recordkeeping requirements.

42 CFR Part 498

Administrative practice and procedure, Health facilities, Health professions, Medicare, Reporting and recordkeeping requirements.

For the reasons set forth in the preamble, 42 CFR Chapter IV is amended as follows:

PART 409—HOSPITAL INSURANCE BENEFITS

A. Part 409 is amended as set forth below.

1. The authority citation for part 409 is revised to read as follows:

Authority: Secs. 1102 and 1871 of the Social Security Act (42 U.S.C. 1302 and 1395hh).

2. In § 409.1, paragraph (e) is revised to read as follows:

§ 409.1 Statutory basis.

* * * * *

(e) Section 1862(a) specifies exclusions from coverage.

* * * * *

3. Section 409.19 is removed.

PART 410—SUPPLEMENTARY MEDICAL INSURANCE (SMI) BENEFITS

B. Part 410 is amended as set forth below.

1. The authority citation for part 410 continues to read as follows:

Authority: Secs. 1102 and 1871 of the Social Security Act (42 U.S.C. 1302 and 1395hh).

§ 410.64 [Removed]

2. Section 410.64 is removed.

PART 489—PROVIDER AGREEMENTS AND SUPPLIER APPROVAL

C. Part 489 is amended as set forth below.

1. The authority citation for part 489 continues to read as follows:

Authority: Secs. 1102, 1819, 1861, 1864(m), 1866, and 1871 of the Social Security Act (42 U.S.C. 1302, 1395i–3, 1395x, 1395aa(m), 1395cc, and 1395hh).

§ 489.21 [Amended]

2. In § 489.21, paragraph (g) is removed and reserved.

PART 498—APPEALS PROCEDURES FOR DETERMINATIONS THAT AFFECT PARTICIPATION IN THE MEDICARE PROGRAM AND FOR DETERMINATIONS THAT AFFECT THE PARTICIPATION OF ICFS/MR AND CERTAIN NFS IN THE MEDICAID PROGRAM

D. Part 498 is amended as set forth below.

1. The authority citation for part 498 continues to read as follows:

Authority: Secs 1102 and 1871 of the Social Security Act (42 U.S.C. 1302 and 1395hh).

§ 498.3 [Amended]

2. In § 498.3, paragraph (b)(11) is removed and reserved.

Authority: Secs. 1102, 1819, 1861, 1864(m), 1866, and 1871 of the Social Security Act (42 U.S.C. 1302, 1395i–3, 1395x, 1395aa(m), 1395cc, 1395hh, and 1895hh).

(Catalog of Federal Domestic Assistance Program No. 93.773, Medicare Hospital Insurance; Program No. 93.774, Medicare Supplementary Medical Insurance)

Dated: April 18, 2000.

Nancy-Ann Min DeParle,

Administrator, Health Care Financing Administration.

Dated: May 31, 2000.

Donna E. Shalala,

Secretary.

[FR Doc. 00–26282 Filed 10–18–00; 8:45 am]

BILLING CODE 4120–01–P

FEDERAL COMMUNICATIONS COMMISSION

47 CFR Part 20

[CC Docket No. 94–54; FCC 00–251]

Interconnection and Resale Obligations Pertaining to Commercial Mobile Radio Services; Correction

AGENCY: Federal Communications Commission.

ACTION: Final rule; correction.

SUMMARY: On September 29, 2000, the Commission published a document in the **Federal Register** which established service rules governing the manual roaming responsibilities of Commercial Mobile Radio Services (CMRS) providers. This document makes corrections to that document.

DATES: Effective November 28, 2000.

FOR FURTHER INFORMATION CONTACT: Paul Murray at (202) 418–7240.

SUPPLEMENTARY INFORMATION: The Commission, in its summary of the Memorandum Opinion and Order (MO&O), FR Doc. 00–24964, published in the **Federal Register** of September 29, 2000 (65 FR 58477) released information that requires correction. First, it misstated the correct agency docket number for the item (CC Docket No. 94–54) in the headings section. Then, in the **SUPPLEMENTARY INFORMATION** section of the preamble, the Commission erroneously incorporated a docket number and the associated adoption and release dates from another proceeding into this item thereby omitting the correct docket number for this proceeding (CC Docket No. 94–54), the correct adoption date of the MO&O (July 13, 2000), and the correct release date of the MO&O (August 28, 2000). Further, this item corrects the phone listing for Paul Murray to 418–7240.

In FR Doc. 00–24964, published in the **Federal Register** of September 29, 2000 (65 FR 58477), make the following corrections:

(1) On page 58477, in the second column, in the Agency Docket number, correct ''PR Docket No. 94–54'' to read ''CC Docket No. 94–54.''

(2) On the same page, in the third column, line four, correct ''(202) 418–0688'' to read ''(202) 418–7240.''

(3) On the same page, in the same column, line 11, correct ''PR Docket No. 93–144'' to read ''CC Docket No. 94–54.''

(4) On the same page, in the same column, line 12, correct ''August 2, 2000'' to read ''July 13, 2000.''

(5) On the same page, in the same column, lines 12 and 13, correct ''August 4, 2000'' to read ''August 28, 2000.''

Federal Communications Commission.

Magalie Roman Salas,

Secretary.

[FR Doc. 00–26893 Filed 10–18–00; 8:45 am]

BILLING CODE 6712–01–P

DEPARTMENT OF COMMERCE

National Oceanic and Atmospheric Administration

50 CFR Part 679

[Docket No. 000211040–0040–01; I.D. 101200A]

Fisheries of the Exclusive Economic Zone Off Alaska; Reallocation of Pollock

AGENCY: National Marine Fisheries Service (NMFS), National Oceanic and Atmospheric Administration (NOAA), Commerce.

ACTION: Reallocation.

SUMMARY: NMFS is reallocating projected unused amounts of Bering Sea

subarea (BS) pollock from the incidental catch allowance to the directed fisheries. This action is necessary to allow the 2000 total allowable catch (TAC) of pollock to be harvested.

DATES: Effective October 13, 2000.

FOR FURTHER INFORMATION CONTACT: Andrew Smoker, 907–586-7228.

SUPPLEMENTARY INFORMATION: NMFS manages the groundfish fishery in the Bering Sea and Aleutian Islands area (BSAI) according to the Fishery Management Plan for the Groundfish Fishery of the Bering Sea and Aleutian Islands Area (FMP) prepared by the North Pacific Fishery Management Council under authority of the Magnuson–Stevens Fishery Conservation and Management Act. Regulations governing fishing by U.S. vessels in accordance with the FMP appear at subpart H of 50 CFR part 600 and 50 CFR part 679.

In accordance with section 206(b) of the American Fisheries Act (AFA), NMFS specified a pollock incidental catch allowance equal to 5 percent of the pollock total allowable catch after subtraction of the 10 percent Community Development Quota reserve in the Final 2000 Harvest Specifications for Groundfish for the BSAI (65 FR 8282, February 18, 2000).

As of October 10, 2000, the Administrator, Alaska Region, NMFS (Regional Administrator), has determined that approximately 14,000 metric tons (mt) of pollock remain in the incidental catch allowance. Based on projected harvest rates of other groundfish species and the expected bycatch of pollock in those fisheries, the Regional Administrator has determined that 9,000 mt of pollock specified in the incidental catch account will not be necessary as incidental catch. Therefore, NMFS is apportioning the projected unused amount, 9,000 mt, of pollock from the incidental catch allowance to the directed fishing allowances established at section 206(b) of the AFA. This transfer will increase the allocation to catcher vessels harvesting pollock for processing by the inshore component by 4,500 mt, to catcher/processors and catcher vessels harvesting pollock for processing by catcher processors in the offshore component by 3,600 mt, and to catcher vessels harvesting pollock for processing by motherships in the offshore component by 900 mt. Pursuant to section 210(c) of the AFA, no less than 8.5 percent of the 3,600 mt allocated to catcher processors in the offshore component, 306 mt, will be available for harvest only by eligible catcher vessels delivering to listed catcher processors.

Regulations in the emergency interim rule establishing Steller sea lion protection measures for the pollock fisheries off Alaska (65 FR 3892, January 25, 2000) and extended (65 FR 36795, June 12, 2000) allow for catch to occur within the C/D season so that pollock removals from all sectors do not exceed 60 percent of the annual TAC. Sixty percent of the annual pollock TAC is equal to 683,400 mt tons. With this apportionment the C/D season catch for the three combined directed fisheries, the CDQ fishery, and bycatch of pollock in other directed groundfish fisheries will be less than 679,000 mt, thereby not violating the 60 percent restriction.

The emergency interim rule to establish AFA permit requirements (65 FR 380, January 5, 2000) and the extension (65 FR 39107, June 23, 2000) set out procedures for AFA inshore catcher vessel pollock cooperatives to apply for and receive cooperative fishing permits and inshore pollock allocations. NMFS received applications from seven inshore catcher vessel cooperatives by the application deadline of December 31, 1999. Table 1 revises the final 2000 BS subarea allocations to include the seven inshore catcher vessel pollock cooperatives that have been approved and permitted by NMFS for the 2000 fishing year consistent with this reallocation.

BILLING CODE 3510–22–S

TABLE 1. REVISED BERING SEA SUBAREA FINAL 2000 INSHORE COOPERATIVE ALLOCATIONS

Cooperative name and member vessels	Sum of member vessel's official catch histories[1]	Percentage of inshore sector allocation	Final annual co-op allocation
Akutan Catcher Vessel Association ALDEBARAN, ARCTIC I, ARCTIC VI, ARCTURUS, BLUE FOX, COLUMBIA, DOMINATOR, DONA LILIANA, DONA MARTITA, DONA PAULITA, EXODUS, FLYING CLOUD, GOLDEN DAWN, MAJESTY, PACIFIC VIKING, VIKING EXPLORER, GOLDEN PISCES, LESLIE LEE, MARCY J, MISS BERDIE, PEGASUS, PEGGIE JO, PERSEVERANCE, PREDATOR, RAVEN, ROYAL AMERICAN, SEEKER	258,508	28.257%	138,861
Arctic Enterprise Association ARCTIC III, ARCTIC IV, OCEAN ENTERPRISE, PACIFIC ENTERPRISE	50,008	5.466%	26,861
Northern Victor Fleet Cooperative NORDIC FURY, PACIFIC FURY, GOLDRUSH, EXCALIBUR II, HALF MOON BAY, SUNSET BAY, COMMODORE, STORM PETREL, POSEIDON, ROYAL ATLANTIC,	62,545	6.837%	33,599
Peter Pan Fleet Cooperative AMBER DAWN, AMERICAN BEAUTY, OCEANIC, OCEAN LEADER, WALTER N	6,584	0.720%	3,538
Unalaska Cooperative ALASKA ROSE, BERING ROSE, DESTINATION, GREAT PACIFIC, MESSIAH, MORNING STAR, MS AMY, PROGRESS, SEA WOLF, VANGUARD, WESTERN DAWN	106,714	11.665%	57,324
UniSea Fleet Cooperative ALSEA, AMERICAN EAGLE, ARCTIC WIND, ARGOSY, AURIGA, AURORA, DEFENDER, GUN-MAR, NORDIC STAR, PACIFIC MONARCH, SEADAWN, STARFISH, STARLITE, STARWARD	220,361	24.087%	118,369
Westward Fleet Cooperative A.J., ALASKAN COMMAND, ALYESKA, CAITLIN ANN, CHELSEA K, HICKORY WIND, FIERCE ALLEGIANCE, OCEAN HOPE 3, PACIFIC KNIGHT, PACIFIC PRINCE, VIKING, WESTWARD 1	153,917	16.824%	82,677
Open access AFA vessels	56,215	6.145%	30,198
Total 2000 inshore pollock allocation	914,851	100%	491,422

[1]Under 679.61(e)(1) the individual catch history for each vessel is equal to the vessel's best 2 of 3 years inshore pollock landings from 1995 through 1997 and includes landings to catcher/processors for vessels that made 500 or more mt of landings to catcher/processors from 1995 through 1997.

BILLING CODE 3510–22–C

Classification

This action responds to the best available information recently obtained from the fishery. NMFS finds that the need to implement this action immediately in order to allow full utilization of the pollock TAC constitutes good cause to waive prior notice and comment as such procedures are unnecessary and contrary to the public interest. As further delay would only disrupt the AFA and the FMP's objective of providing pollock for harvest in directed fisheries, NMFS finds for good cause that the implementation of this action cannot be delayed for 30 days. Accordingly, under 5 U.S.C. 553(d), a delay in the effective date is hereby waived.

This action is taken under 50 CFR 679.20, and is exempt from review under E.O. 12866.

Authority: 16 U.S.C. 1801 *et. seq.*

October 13, 2000.

Clarence Pautzke

Director, Office of Sustainable Fisheries, National Marine Fisheries Service.

[FR Doc. 00–26786 Filed 10–13–00; 5:02 pm]

BILLING CODE: 3510–22–S

Proposed Rules

Federal Register
Vol. 65, No. 203
Thursday, October 19, 2000

This section of the FEDERAL REGISTER contains notices to the public of the proposed issuance of rules and regulations. The purpose of these notices is to give interested persons an opportunity to participate in the rule making prior to the adoption of the final rules.

DEPARTMENT OF AGRICULTURE

Animal and Plant Health Inspection Service

9 CFR Parts 1 and 2

[Docket No. 97–121–2]

Animal Welfare; Inspection, Licensing, and Procurement of Animals

AGENCY: Animal and Plant Health Inspection Service, USDA.

ACTION: Notice of reopening and extension of comment period.

SUMMARY: We are reopening and extending the comment period for our proposal to amend the Animal Welfare regulations by revising and clarifying the exemptions from the licensing requirements, the procedures for license applications and renewals, and restrictions upon the acquisition of dogs and cats and other animals. This action will allow interested persons additional time to prepare and submit comments.

DATES: We invite you to comment on Docket No. 97–121–1. We will consider all comments that we receive by November 20, 2000.

ADDRESSES: Please send your comment and three copies to:

Docket No. 97–121–1, Regulatory Analysis and Development, PPD, APHIS, Suite 3C03, 4700 River Road, Unit 118, Riverdale, MD 20737–1238. Please state that your comment refers to Docket No. 97–121–1.

You may read any comments that we receive on this docket in our reading room. The reading room is located in room 1141 of the USDA South Building, 14th Street and Independence Avenue, SW., Washington, DC. Normal reading room hours are 8 a.m. to 4:30 p.m., Monday through Friday, except holidays. To be sure someone is there to help you, please call (202) 690–2817 before coming.

APHIS documents published in the **Federal Register**, and related information, including the names of organizations and individuals who have commented on APHIS dockets, are available on the Internet at http://www.aphis.usda.gov/ppd/rad/webrepor.html.

FOR FURTHER INFORMATION CONTACT: Dr. Barbara Kohn, Staff Veterinarian, AC, APHIS, 4700 River Road Unit 84, Riverdale, MD 20737–1234; (301) 734–7833.

SUPPLEMENTARY INFORMATION:

Background

On August 4, 2000, we published in the **Federal Register** (65 FR 47908–47918, Docket No. 97–121–1) a proposal to amend the Animal Welfare regulations by revising and clarifying the exemptions from the licensing requirements, the procedures for license applications and renewals, and restrictions upon the acquisition of dogs and cats and other animals.

Comments in response to our proposal were required to be received on or before October 3, 2000. In response to requests from the public, we are extending the comment period on Docket No. 97–121–1 for an additional 30 days. This action will allow interested persons additional time to prepare and submit comments.

Authority: 7 U.S.C. 2131–2159; 7 CFR 2.22, 2.80, and 371.7.

Done in Washington, DC, this 13th day of October 2000 .

William R. DeHaven,

Acting Administrator, Animal and Plant Health Inspection Service.

[FR Doc. 00–26900 Filed 10–18–00; 8:45 am]

BILLING CODE 3410–34–P

DEPARTMENT OF TRANSPORTATION

Federal Aviation Administration

14 CFR Part 39

[Docket No. 99–CE–34–AD; Amendment 39–11578; AD 2000–03–19]

RIN 2120–AA64

Airworthiness Directives; Industrie Aeronautiche e Meccaniche Model Piaggio P–180 Airplanes

AGENCY: Federal Aviation Administration, DOT.

ACTION: Notice of proposed rulemaking (NPRM); proposed removal of final rule.

SUMMARY: This document proposes to remove Airworthiness Directive (AD) 2000–03–19, which currently applies to all Industrie Aeronautiche e Meccaniche (I.A.M.) Model Piaggio P–180 airplanes that are equipped with pneumatic deicing boots. AD 2000–03–19 requires revising the Airplane Flight Manual (AFM) to include requirements for activating the airframe pneumatic deicing boots. Since FAA issued AD 2000–03–19, I.A.M. has shown the language currently included in the AFM and the airplane configuration are satisfactory to address the conditions identified in AD 2000–03–19. Therefore, this action proposes to remove AD 2000–03–19.

DATES: The Federal Aviation Administration (FAA) must receive any comments on this rule by November 24, 2000.

ADDRESSES: You may look at information related to this action at the Federal Aviation Administration (FAA), Central Region, Office of the Regional Counsel, Attention: Rules Docket No. 99–CE–34–AD, 901 Locust, Room 506, Kansas City, Missouri 64106, between 8 a.m. and 4 p.m., Monday through Friday, except holidays.

FOR FURTHER INFORMATION CONTACT: Larry Werth, Airworthiness Directive Coordinator, FAA, Small Airplane Directorate, 901 Locust, Room 301, Kansas City, Missouri 64106; telephone: (816) 329–4147; facsimile: (816) 329–4090.

SUPPLEMENTARY INFORMATION:

Comments Invited

How Do I Comment on This Proposed Removal?

We invite your comments on the proposed removal. You may send whatever written data, views, or arguments you choose. You need to include the docket number and send your comments in triplicate to the address named under the caption **ADDRESSES.** We will consider all comments received by the closing date specified above, before acting on the proposed removal. We may change the proposals contained in this action because of the comments received.

Are There Any Specific Portions of the Proposal I Should Pay Attention to?

The FAA specifically invites comments on the overall regulatory,

economic, environmental, and energy aspects of the proposed removal that might call for a need to change the proposed removal. You may examine all comments we receive. We will file a report in the Rules Docket that summarizes each FAA contact with the public that concerns the substantive parts of this proposal.

The FAA is reexamining the writing style we currently use in regulatory documents, in response to the Presidential memorandum of June 1, 1998. That memorandum requires federal agencies to communicate more clearly with the public. We are interested in your comments on the ease of understanding this document, and any other suggestions you might have to improve the clarity of FAA communications that affect you. You can get more information about the Presidential memorandum and the plain language initiative at *http://www.faa.gov/language/.*

How Can I Be Sure FAA Receives My Comment?

If you want us to acknowledge the receipt of your comments, you must include a self-addressed, stamped postcard. On the postcard, write ''Comments to Docket No. 99–CE–34–AD.'' We will date stamp and mail the postcard back to you.

Discussion

Has FAA Taken Any Action to This Point?

Reports of in-flight incidents and an accident that occurred in icing conditions where the airframe pneumatic deicing boots were not activated caused FAA to issue AD 2000–03–19, Amendment 39–11578 (65 FR 7717, February 16, 2000). This AD currently requires revising the Airplane Flight Manual (AFM) to include requirements for activating the airframe pneumatic deicing boots on all I.A.M. Model Piaggio P–180 airplanes that are equipped with pneumatic deicing boots.

The actions of AD 2000–03–19 are intended to assure that flightcrews have the information necessary to activate the pneumatic wing and tail deicing boots at the first signs of ice build-up. Without this information, flightcrews could experience reduced control of the aircraft because of adverse aerodynamic effects of ice adhering to the airplane before the first deicing cycle.

Events Leading to This Proposed Action

What Events Have Occurred To Initiate This Proposed Action?

I.A.M. believes the present wording within the AFM and the configuration of the airplane deice system provides for safe operation of the affected airplanes. Therefore, I.A.M. requests FAA remove the final rule because the requirements are redundant. The FAA has since evaluated all information related to the subject matter of AD 2000–03–19 and has determined the actions included in AD 2000–03–19 are redundant and not necessary.

The FAA's Determination and Provisions of This Proposed Action

What Has FAA Decided?

Based on the above information, FAA has determined there is no need for AD 2000–03–19 and that it should be removed.

What Does This Action Propose?

This action proposes to remove AD 2000–03–19. Removal of AD 2000–03–19 would constitute a final action. This removal would not commit the agency to any course of action in the future.

Regulatory Impact

Does This AD Involve a Significant Rule or Regulatory Action?

Since this proposed action would only remove an AD, it is neither a proposed AD nor a final AD and, therefore, is not covered under Executive Order 12866, the Regulatory Flexibility Act, or DOT Regulatory Policies and Procedures (44 FR 11034, February 26, 1979).

List of Subjects in 14 CFR Part 39

Air transportation, Aircraft, Aviation safety, Safety.

The Proposed Removal

Accordingly, under the authority delegated to me by the Administrator, the Federal Aviation Administration proposes to amend part 39 of the Federal Aviation Regulations (14 CFR part 39) as follows:

PART 39—AIRWORTHINESS DIRECTIVES

1. The authority citation for part 39 continues to read as follows:

Authority: 49 U.S.C. 106(g), 40113, 44701.

§ 39.13 [Amended]

2. FAA amends § 39.13 by removing AD 2000–03–19, Amendment 39–11578, published in the **Federal Register** on February 16, 2000 (65 FR 7717).

Issued in Kansas City, Missouri, on October 10, 2000.

Marvin R. Nuss,

Acting Manager, Small Airplane Directorate, Aircraft Certification Service.

[FR Doc. 00–26562 Filed 10–18–00; 8:45 am]

BILLING CODE 4910–13–P

DEPARTMENT OF TRANSPORTATION

Federal Aviation Administration

14 CFR Part 39

[Docket No. 2000–NM–41–AD]

RIN 2120–AA64

Airworthiness Directives; Lockheed Model L–1011–385 Series Airplanes

AGENCY: Federal Aviation Administration, DOT.

ACTION: Notice of proposed rulemaking (NPRM).

SUMMARY: This document proposes the adoption of a new airworthiness directive (AD) that is applicable to all Lockheed Model L–1011–385 series airplanes. This proposal would require a visual inspection of the fuel level control switch, the fuel level control switch wiring harness, and the wiring harness conduit for damage, wear or chafing, broken or missing O-rings, or indications of electrical arcing. The proposal would also require replacement of a certain conduit in the fuel level control switch wiring harness, installation of electrical sleeving over the fuel level control switch wiring harness, and installation of the modified fuel level control switch. These actions are intended to prevent chafing of the fuel level control switch wiring harness, which could cause arcing and result in a fire in the fuel tank.

DATES: Comments must be received by December 4, 2000.

ADDRESSES: Submit comments in triplicate to the Federal Aviation Administration (FAA), Transport Airplane Directorate, ANM–114, Attention: Rules Docket No. 2000–NM–41–AD, 1601 Lind Avenue, SW., Renton, Washington 98055–4056. Comments may be inspected at this location between 9:00 a.m. and 3:00 p.m., Monday through Friday, except Federal holidays.

Comments may be submitted via fax to (425) 227–1232. Comments may also be sent via the Internet using the following address: 9-anm-nprmcomment@faa.gov. Comments sent via fax or the Internet must contain ''Docket No. 2000–NM–41–AD'' in the subject line and need not be submitted

in triplicate. Comments sent via the Internet as attached electronic files must be formatted in Microsoft Word 97 for Windows or ASCII text.

The service information referenced in the proposed rule may be obtained from Lockheed Martin Aircraft & Logistics Center, 120 Orion Street, Greenville, South Carolina 29605. This information may be examined at the FAA, Transport Airplane Directorate, 1601 Lind Avenue, SW., Renton, Washington; or at the FAA, Atlanta ACO, One Crown Center, 1895 Phoenix Boulevard, suite 450, Atlanta, Georgia.

FOR FURTHER INFORMATION CONTACT: Tom Peters, Program Manager, ACE–116A, FAA, Atlanta Aircraft Certification Office, One Crown Center, 1895 Phoenix Boulevard, suite 450, Atlanta, Georgia 30349; telephone (770) 703–6063; fax (770) 703–6097.

SUPPLEMENTARY INFORMATION:

Comments Invited

Interested persons are invited to participate in the making of the proposed rule by submitting such written data, views, or arguments as they may desire. Communications shall identify the Rules Docket number and be submitted in triplicate to the address specified above. All communications received on or before the closing date for comments, specified above, will be considered before taking action on the proposed rule. The proposals contained in this notice may be changed in light of the comments received.

Submit comments using the following format:

- Organize comments issue-by-issue. For example, discuss a request to change the compliance time and a request to change the service bulletin reference as two separate issues.
- For each issue, state what specific change to the proposed AD is being requested.
- Include justification (*e.g.,* reasons or data) for each request.

Comments are specifically invited on the overall regulatory, economic, environmental, and energy aspects of the proposed rule. All comments submitted will be available, both before and after the closing date for comments, in the Rules Docket for examination by interested persons. A report summarizing each FAA-public contact concerned with the substance of this proposal will be filed in the Rules Docket.

Commenters wishing the FAA to acknowledge receipt of their comments submitted in response to this notice must submit a self-addressed, stamped postcard on which the following statement is made: ''Comments to Docket Number 2000–NM–41–AD.'' The postcard will be date stamped and returned to the commenter.

Availability of NPRMs

Any person may obtain a copy of this NPRM by submitting a request to the FAA, Transport Airplane Directorate, ANM–114, Attention: Rules Docket No. 2000–NM–41–AD, 1601 Lind Avenue, SW., Renton, Washington 98055–4056.

Discussion

Following an incident of chafing of electrical power wires and subsequent arcing through a conduit inside a fuel tank on another manufacturer's transport airplane, the FAA requested that airplane manufacturers perform a survey of electrical power wires routed in conduits inside fuel tanks of high-time airplanes. As part of the resulting survey, 41 wiring harnesses of the fuel level control switch were removed and inspected. Of these, two harnesses showed signs of damage to the insulation around the wires. This condition, if not corrected, could result in chafing of the wiring harness of the fuel level control switch, which could cause arcing and result in a fire in the fuel tank.

Explanation of Relevant Service Information

The FAA has reviewed and approved Lockheed Service Bulletin 093–28–094, dated March 3, 2000, which describes procedures for inspecting the fuel level control switch, the fuel level control switch wiring harness, and the wiring harness conduit for visible damage, wear or chafing, broken or missing O-rings, or indications of electrical arcing. The service bulletin also describes procedures for replacement of a certain conduit in the fuel level control switch wiring harness, installation of electrical sleeving over the fuel level control switch wiring harness, and installation of the fuel level control switch which has been so modified. Accomplishment of the actions specified in the service bulletin is intended to adequately address the identified unsafe condition.

Explanation of Requirements of Proposed Rule

Since an unsafe condition has been identified that is likely to exist or develop on other products of this same type design, the proposed AD would require accomplishment of the actions specified in the service bulletin described previously, except as discussed below.

Differences Between Proposed Rule and Service Bulletin

Operators should note that, although the service bulletin recommends accomplishing the inspection, installation, and replacement actions ''at the earliest opportunity where manpower and facilities are available,'' the FAA has determined that such an indefinite compliance schedule would not address the identified unsafe condition in a timely manner. In developing an appropriate compliance time for this AD, the FAA considered not only the manufacturer's recommendation, but the degree of urgency associated with addressing the subject unsafe condition, the average utilization of the affected fleet, and the schedule of regular inspections and maintenance. In light of all of these factors, the FAA finds a twelve-month compliance time for initiating the required actions to be warranted, in that it represents an appropriate interval for affected airplanes to continue to operate without compromising safety.

Cost Impact

There are approximately 235 airplanes of the affected design in the worldwide fleet. The FAA estimates that 117 airplanes of U.S. registry would be affected by this proposed AD, that it would take approximately 19 work hours per airplane to accomplish the proposed inspection, replacement, and installation, and that the average labor rate is $60 per work hour. Required parts would cost approximately $200 per airplane. Based on these figures, the cost impact of the proposed AD on U.S. operators is estimated to be $156,780, or $1,340 per airplane.

The cost impact figure discussed above is based on assumptions that no operator has yet accomplished any of the proposed requirements of this AD action, and that no operator would accomplish those actions in the future if this proposed AD were not adopted. The cost impact figures discussed in AD rulemaking actions represent only the time necessary to perform the specific actions actually required by the AD. These figures typically do not include incidental costs, such as the time required to gain access and close up, planning time, or time necessitated by other administrative actions.

Regulatory Impact

The regulations proposed herein would not have a substantial direct effect on the States, on the relationship between the national Government and the States, or on the distribution of power and responsibilities among the

various levels of government. Therefore, it is determined that this proposal would not have federalism implications under Executive Order 13132.

For the reasons discussed above, I certify that this proposed regulation (1) is not a ''significant regulatory action'' under Executive Order 12866; (2) is not a ''significant rule'' under the DOT Regulatory Policies and Procedures (44 FR 11034, February 26, 1979); and (3) if promulgated, will not have a significant economic impact, positive or negative, on a substantial number of small entities under the criteria of the Regulatory Flexibility Act. A copy of the draft regulatory evaluation prepared for this action is contained in the Rules Docket. A copy of it may be obtained by contacting the Rules Docket at the location provided under the caption **ADDRESSES.**

List of Subjects in 14 CFR Part 39

Air transportation, Aircraft, Aviation safety, Safety.

The Proposed Amendment

Accordingly, pursuant to the authority delegated to me by the Administrator, the Federal Aviation Administration proposes to amend part 39 of the Federal Aviation Regulations (14 CFR part 39) as follows:

PART 39—AIRWORTHINESS DIRECTIVES

1. The authority citation for part 39 continues to read as follows:

Authority: 49 U.S.C. 106(g), 40113, 44701.

§ 39.13 [Amended]

2. Section 39.13 is amended by adding the following new airworthiness directive:

Lockheed: Docket 2000–NM–41–AD.

Applicability: All Model L–1011–385 series airplanes; certificated in any category.

Note 1: This AD applies to each airplane identified in the preceding applicability provision, regardless of whether it has been modified, altered, or repaired in the area subject to the requirements of this AD. For airplanes that have been modified, altered, or repaired so that the performance of the requirements of this AD is affected, the owner/operator must request approval for an alternative method of compliance in accordance with paragraph (b) of this AD. The request should include an assessment of the effect of the modification, alteration, or repair on the unsafe condition addressed by this AD; and, if the unsafe condition has not been eliminated, the request should include specific proposed actions to address it.

Compliance: Required as indicated, unless accomplished previously.

To prevent chafing of the fuel level control switch wiring harness, which could cause arcing and result in a fire in the fuel tank, accomplish the following:

Inspection, Replacement, and Installation

(a) Within 12 months after the effective date of this AD: Verify the part number (P/N) of the wiring harness conduit and perform a general visual inspection of the fuel level control switch, the fuel level control switch wiring harness, and the wiring harness conduit to detect any visible damage, any wear or chafing, broken or missing O-rings, or indications of electrical arcing, in accordance with the Accomplishment Instructions in Lockheed Service Bulletin 093–28–094, dated March 3, 2000.

Note 2: For the purposes of this AD, a general visual inspection is defined as: ''A visual examination of an interior or exterior area, installation, or assembly to detect obvious damage, failure, or irregularity. This level of inspection is made under normally available lighting conditions such as daylight, hangar lighting, flashlight, or drop-light, and may require removal or opening of access panels or doors. Stands, ladders, or platforms may be required to gain proximity to the area being checked.''

(1) If a conduit with P/N 97590–121 is installed: Prior to further flight, install sleeving over each fuel level control switch wiring harness and install the modified fuel level control switch, in accordance with the service bulletin.

(2) If any conduit other than with P/N 97590–121 is installed: Prior to further flight, replace the conduit with one having P/N 97590–121, install sleeving over each fuel level control switch wiring harness, and install the modified fuel level control switch, in accordance with the service bulletin.

Alternative Methods of Compliance

(b) An alternative method of compliance or adjustment of the compliance time that provides an acceptable level of safety may be used if approved by the Manager, Atlanta Aircraft Certification Office (ACO), FAA. Operators shall submit their requests through an appropriate FAA Principal Maintenance Inspector, who may add comments and then send it to the Manager, Atlanta ACO.

Note 3: Information concerning the existence of approved alternative methods of compliance with this AD, if any, may be obtained from the Atlanta ACO.

Special Flight Permits

(c) Special flight permits may be issued in accordance with sections 21.197 and 21.199 of the Federal Aviation Regulations (14 CFR 21.197 and 21.199) to operate the airplane to a location where the requirements of this AD can be accomplished.

Issued in Renton, Washington, on October 13, 2000.

Donald L. Riggin,

Acting Manager, Transport Airplane Directorate, Aircraft Certification Service.

[FR Doc. 00–26879 Filed 10–18–00; 8:45 am]

BILLING CODE 4910–13–P

DEPARTMENT OF TRANSPORTATION

Federal Aviation Administration

14 CFR Part 71

[Airspace Docket No. 00–AGL–28]

Proposed Establishment of Class E Airspace; Stanley, ND

AGENCY: Federal Aviation Administration (FAA), DOT.

ACTION: Notice of proposed rulemaking.

SUMMARY: This action proposes to establish Class E airspace at Stanley, ND. An Area Navigation (RNAV) Standard Instrument Approach Procedure (SIAP) to Runway 27 has been developed for Stanley Municipal Airport. Controlled airspace extending upward from 700 feet above the surface is needed to contain aircraft executing this approach. This action would create Class E airspace for Stanley, ND.

DATES: Comments must be received on or before December 1, 2000.

ADDRESSES: Send comments on the proposal in triplicate to: Federal Aviation Administration, Office of the Regional Counsel, AGL–7, Rules Docket No. 00–AGL–28, 2300 East Devon Avenue, Des Plaines, Illinois 60018.

The official docket may be examined in the Office of the Regional Counsel, Federal Aviation Administration, 2300 East Devon Avenue, Des Plaines, Illinois. An informal docket may also be examined during normal business hours at the Air Traffic Division, Airspace Branch, Federal Aviation Administration, 2300 East Devon Avenue, Des Plaines, Illinois.

FOR FURTHER INFORMATION CONTACT: Denis C. Burke, Air Traffic Division, Airspace Branch, AGL–520, Federal Aviation Administration, 2300 East Devon Avenue, Des Plaines, Illinois 60018, telephone (847) 294–7568.

SUPPLEMENTARY INFORMATION:

Comments Invited

Interested parties are invited to participate in this proposed rulemaking by submitting such written data, views, or arguments as they may desire. Comments that provide the factual basis supporting the views and suggestions presented are particularly helpful in developing reasoned regulatory decisions on the proposal. Comments are specifically invited on the overall regulatory, aeronautical, economic, environmental, and energy-related aspects of the proposal. Communications should identify the airspace docket number and be submitted in triplicate to the address

listed above. Commenters wishing the FAA to acknowledge receipt of their comments on this action must submit with those comments a self-addressed, stamped postcard on which the following statement is made: ''Comments to Airspace Docket No. 00–AGL–28.'' The postcard will be date/time stamped and returned to the commenter. All communications received on or before the specified closing date for comments will be considered before taking action on the proposed rule. The proposal contained in this action may be changed in light of comments received. All comments submitted will be available for examination in the Rules Docket, FAA, Great Lakes Region, Office of the Regional Counsel, 2300 East Devon Avenue, Des Plaines, Illinois, both before and after the closing date for comments. A report summarizing each substantive public contact with FAA personnel concerned with this rulemaking will be filed in the docket.

Availability of NPRM's

Any person may obtain a copy of this Notice of Proposed Rulemaking (NPRM) by submitting a request to the Federal Aviation Administration, Office of Public Affairs, Attention: Public Inquiry Center, APA–230, 800 Independence Avenue, S.W., Washington, DC 20591, or by calling (202) 267–3484. Communications must identify the docket number of this NPRM. Persons interested in being placed on a mailing list for future NPRM's should also request a copy of Advisory Circular No. 11–2A, which describes the application procedure.

The Proposal

The FAA is considering an amendment to 14 CFR part 71 to establish Class E airspace at Stanley, ND, by creating Class E airspace for Stanley Municipal Airport. Controlled airspace extending upward from 700 feet above the surface is needed to contain aircraft executing instrument approach procedures. The area would be depicted on appropriate aeronautical charts. Class E airspace areas extending upward from 700 feet or more above the surface of the earth are published in paragraph 6005 of FAA Order 7400.9H dated September 1, 2000, and effective September 16, 2000, which is incorporated by reference in 14 CFR 71.1. The Class E designations listed in this document would be published subsequently in the Order.

The FAA has determined that this proposed regulation only involves an establishment body of technical regulations for which frequent and routine amendments are necessary to keep them operationally current. Therefore, this proposed regulation—(1) is not a ''significant regulatory action'' under Executive Order 12866; (2) is not a ''significant rule'' under DOT Regulatory Policies and Procedures (44 FR 11034; February 26, 1979); and (3) does not warrant preparation of a Regulatory Evaluation as the anticipated impact is so minimal. Since this is a routine matter that will only affect air traffic procedures and air navigation, it is certified that this proposed rule will not have a significant economic impact on a substantial number of small entities under the criteria of the Regulatory Flexibility Act.

List of Subjects in 14 CFR Part 71

Airspace, Incorporation by reference, Navigation (air).

The Proposed Amendment

Accordingly, pursuant to the authority delegated to me, the Federal Aviation Administration proposes to amend 14 CFR part 71 as follows:

PART 71—DESIGNATION OF CLASS A, CLASS B, CLASS C, CLASS D, AND CLASS E AIRSPACE AREAS; AIRWAYS; ROUTES; AND REPORTING POINTS

1. The authority citation for part 71 continues to read as follows:

Authority: 49 U.S.C. 106(g), 40103, 40113, 40120; E.O. 10854, 24 FR 9565, 3 CFR, 1959–1963 Comp., p. 389.

§ 71.1 [Amended]

2. The incorporation by reference in 14 CFR 71.1 of the Federal Aviation Administration Order 7400.9H, Airspace Designations and Reporting Points, dated September 1, 2000, and effective September 16, 2000, is amended as follows:

* * * * *

Paragraph 6005 Class E airspace areas extending upward from 700 feet or more above the surface of the earth.

* * * * *

AGL ND E5 Stanley, ND [New]

Stanley Municipal Airport, ND
(Lat. 48°18′ 03″ N, long. 102°24′ 23″ W)

That airspace extending upward from 700 feet above the surface within a 6.4-mile radius of the Stanley Municipal Airport, and that airspace extending upward from 1200 feet above the surface within a 40.0-mile radius of Stanley Municipal Airport, excluding that airspace within the Williston, ND, Tioga, ND, Minot, ND, Kenmare, ND, Hazen, ND, and New Town, ND, Class E airspace areas, and excluding all Federal Airways.

* * * * *

Issued in Des Plaines, Illinois on October 2, 2000.

Christopher R. Blum,

Manager, Air Traffic Division, Great Lakes Region.

[FR Doc. 00–26822 Filed 10–18–00; 8:45 am]

BILLING CODE 4910–13–M

DEPARTMENT OF TRANSPORTATION

Federal Aviation Administration

14 CFR Part 71

[Airspace Docket No. 00–AGL–29]

Proposed Modification of Class E Airspace; Hillsboro, ND

AGENCY: Federal Aviation Administration (FAA), DOT.

ACTION: Notice of proposed rulemaking.

SUMMARY: This notice proposes to modify Class E airspace at Hillsboro, ND. An Area Navigation (RNAV) Standard Instrument Approach Procedure (SIAP) to Runway 16, and an RNAV SIAP to Rwy 34, have been developed for Hillsboro Municipal Airport. Controlled airspace extending upward from 700 feet above the surface is needed to contain aircraft executing these approaches. This action would increase the radius of the existing Class E airspace for Hillsboro, ND.

DATES: Comments must be received on or before December 1, 2000.

ADDRESSES: Send comments on the proposal in triplicate to: Federal Aviation Administration, Office of the Regional Counsel, AGL–7, Rules Docket No. 00–AGL–29, 2300 East Devon Avenue, Des Plaines, Illinois 60018.

The official docket may be examined in the Office of the Regional Counsel, Federal Aviation Administration, 2300 East Devon Avenue, Des Plaines, Illinois. An informal docket may also be examined during normal business hours at the Air Traffic Division, Airspace Branch, Federal Aviation Administration, 2300 East Devon Avenue, Des Plaines, Illinois.

FOR FURTHER INFORMATION CONTACT: Denis C. Burke, Air Traffic Division, Airspace Branch, AGL–520, Federal Aviation Administration, 2300 East Devon Avenue, Des Plaines, Illinios 60018, telephone (847) 294–7568.

SUPPLEMENTARY INFORMATION:

Comments Invited

Interested parties are invited to participate in this proposed rulemaking by submitting such written data, views, or arguments as they may desire. Comments that provide the factual basis

supporting the views and suggestions presented are particularly helpful in developing reasoned regulatory decisions on the proposal. Comments are specifically invited on the overall regulatory, aeronautical, economic, environmental, and energy-related aspects of the proposal. Communications should identify the airspace docket number and be submitted in triplicate to the address listed above. Commenters wishing the FAA to acknowledge receipt of their comments on this action must submit with those comments a self-addressed, stamped postcard on which the following statement is made: ''Comments to Airspace Docket No. 00–AGL–29.'' The postcard will be date/time stamped and returned to the commenter. All communications received on or before the specified closing date for comments will be considered before taking action on the proposed rule. The proposal contained in this action may be changed in light of comments received. All comments submitted will be available for examination in the Rules Docket, FAA, Great Lakes Region, Office of the Regional Counsel, 2300 East Devon Avenue, Des Plaines, Illinois, both before and after the closing date for comments. A report summarizing each substantive public contact with FAA personnel concerned with this rulemaking will be filed in the docket.

Availability of NPRM's

Any person may obtain a copy of this Notice of Proposed Rulemaking (NPRM) by submitting a request to the Federal Aviation Administration, Office of Public Affairs, Attention: Public Inquiry Center, APA–230, 800 Independence Avenue, S.W., Washington, DC 20591, or by calling (202) 267–3484. Communications must identify the docket number of this NPRM. Persons interested in being placed on a mailing list for future NPRM's should also request a copy of Advisory Circular No. 11–2A, which describes the application procedure.

The Proposal

The FAA is considering an amendment to 14 CFR part 71 to modify Class E airspace at Hillsboro, ND, by increasing the radius of the existing Class E airspace for Hillsboro Municipal Airport. Controlled airspace extending upward from 700 feet above the surface is needed to contain aircraft executing instrument approach procedures. The area would be depicted on appropriate aeronautical charts. Class E airspace areas extending upward from 700 feet or more above the surface of the earth are published in paragraph 6005 of FAA Order 7400.9H dated September 1, 2000, and effective September 16, 2000, which is incorporated by reference in 14 CFR 71.1. The Class E designations listed in this document would be published subsequently in the Order.

The FAA has determined that this proposed regulation only involves an establishment body of technical regulations for which frequent and routine amendments are necessary to keep them operationally current. Therefore, this proposed regulation—(1) is not a ''significant regulatory action'' under Executive Order 12866; (2) is not a ''significant rule'' under DOT Regulatory Policies and Procedures (44 FR 11034; February 26, 1979); and (3) does not warrant preparation of a Regulatory Evaluation as the anticipated impact is so minimal. Since this is a routine matter that will only affect air traffic procedures and air navigation, it is certified that this proposed rule will not have a significant economic impact on a substantial number of small entities under the criteria of the Regulatory Flexibility Act.

List of Subjects in 14 CFR Part 71

Airspace, Incorporation by reference, Navigation (air).

The Proposed Amendment

Accordingly, pursuant to the authority delegated to me, the Federal Aviation Administration proposes to amend 14 CFR part 71 as follows:

PART 71—DESIGNATION OF CLASS A, CLASS B, CLASS C, CLASS D, AND CLASS E AIRSPACE AREAS; AIRWAYS; ROUTES; AND REPORTING POINTS

1. The authority citation for part 71 continues to read as follows:

Authority: 49 U.S.C. 106(g), 40103, 40113, 40120; E.O. 10854, 24 FR 9565, 3 CFR, 1959–1963 Comp., p. 389.

§ 71.1 [Amended]

2. The incorporation by reference in 14 CFR 71.1 of the Federal Aviation Administration Order 7400.9H, Airspace Designations and Reporting Points, dated September 1, 2000, and effective September 16, 2000, is amended as follows:

* * * * *

Paragraph 6005 Class E airspace areas extending upward from 700 feet or more above the surface of the earth.

* * * * *

AGL ND E5 Hillsboro, ND [Revised]

Hillsboro Municipal Airport, ND
(Lat. 47°21′34″ N, long. 97°03′38″ W)

That airspace extending upward from 700 feet above the surface within a 6.3-mile radius of the Hillsboro Municipal Airport, and that airspace extending upward from 1200 feet above the surface within the State of North Dakota within a 45.0-mile radius of Hillsboro Municipal Airport, excluding that airspace within the Grand Forks, ND, and Fargo, ND, Class E airspace areas, and excluding all Federal Airways.

* * * * *

Issued in Des Plaines, Illinois on October 2, 2000.

Christopher R. Blum,

Manager, Air Traffic Division, Great Lakes Region.

[FR Doc. 00–26823 Filed 10–18–00; 8:45 am]

BILLING CODE 4910–13–M

DEPARTMENT OF TRANSPORTATION

Federal Aviation Administration

14 CFR Part 71

[Airspace Docket No. 00–AGL–26]

Proposed Establishment of Class E Airspace; Kenmare, ND

AGENCY: Federal Aviation Administration (FAA), DOT.

ACTION: Notice of proposed rulemaking.

SUMMARY: This action proposes to establish Class E airspace at Kenmare, ND. An Area Navigation (RNAV) Standard Instrument Approach Procedure (SIAP) to Runway 26 has been developed for Kenmare Municipal Airport. Controlled airspace extending upward from 700 feet above the surface is needed to contain aircraft executing this approach. This action would create Class E airspace for Kenmare, ND.

DATES: Comments must be received on or before December 1, 2000.

ADDRESSES: Send comments on the proposal in triplicate to: Federal Aviation Administration, Office of the Regional Counsel, AGL–7, Rules Docket No. 00–AGL–26, 2300 East Devon Avenue, Des Plaines, Illinois 60018.

The official docket may be examined in the Office of the Regional Counsel, Federal Aviation Administration, 2300 East Devon Avenue, Des Plaines, Illinois. An informal docket may also be examined during normal business hours at the Air Traffic Division, Airspace Branch, Federal Aviation Administration, 2300 East Devon Avenue, Des Plaines, Illinois.

FOR FURTHER INFORMATION CONTACT: Denis C. Burke, Air Traffic Division, Airspace Branch, AGL–520, Federal Aviation Administration, 2300 East Devon Avenue, Des Plaines, Illinois 60018, telephone (847) 294–7568.

SUPPLEMENTARY INFORMATION:

Comments Invited

Interested parties are invited to participate in this proposed rulemaking by submitting such written data, views, or arguments as they may desire. Comments that provide the factual basis supporting the views and suggestions presented are particularly helpful in developing reasoned regulatory decisions on the proposal. Comments are specifically invited on the overall regulatory, aeronautical, economic, environmental, and energy-related aspects of the proposal. Communications should identify the airspace docket number and be submitted in triplicate to the address listed above.

Commenters wishing the FAA to acknowledge receipt of their comments on this action must submit with those comments a self-addressed, stamped postcard on which the following statement is made: ''Comments to Airspace Docket No. 00–AGL–26.'' The postcard will be date/time stamped and returned to the commenter. All communications received on or before the specified closing date for comments will be considered before taking action on the proposed rule. The proposal contained in this action may be changed in light of comments received.

All comments will be available for examination in the Rules Docket, FAA, Great Lakes Region, Office of the Regional Counsel, 2300 East Devon Avenue, Des Plaines, Illinois, both before and after the closing date for comments. A report summarizing each substantive public contact with FAA personnel concerned with this rulemaking will be filed in the docket.

Availability of NPRM's

Any person may obtain a copy of this Notice of Proposed Rulemaking (NPRM) by submitting a request to the Federal Aviation Administration, Office of Public Affairs, Attention: Public Inquiry Center, APA–230, 800 Independence Avenue, SW., Washington, DC 20591, or by calling (202) 267–3484. Communications must identify the docket number of this NPRM. Persons interested in being placed on a mailing lists for future NPRM's should also request a copy of Advisory Circular No. 11–2A, which describes the application procedure.

The Proposal

The FAA is considering an amendment to 14 CFR part 71 to establish Class E airspace at Kenmare, ND, by creating Class E airspace for Kenmare Municipal Airport. Controlled airspace extending upward from 700 feet above the surface is needed to contain aircraft executing instrument approach procedures. The area would be depicted on appropriate aeronautical charts. Class E airspace areas extending upward from 700 feet or more above the surface of the earth are published in paragraph 6005 of FAA Order 7400.9H dated September 1, 2000, and effective September 16, 2000, which is incorporated by reference in 14 CFR 71.1. The Class E designations listed in this document would be published subsequently in the Order.

The FAA has determined that this proposed regulation only involves an establishment body of technical regulations for which frequent and routine amendments are necessary to keep them operationally current. Therefore, this proposed regulation—(1) is not a ''significant regulatory action'' under Executive Order 12866; (2) is not a ''significant rule'' under DOT Regulatory Policies and Procedures (44 FR 11034; February 26, 1979); and (3) does not warrant preparation of a Regulatory Evaluation as the anticipated impact is so minimal. Since this is a routine matter that will only affect air traffic procedures and air navigation, it is certified that this proposed rule will not have a significant economic impact on a substantial number of small entities under the criteria of the Regulatory Flexibility Act.

List of Subjects in 14 CFR Part 71

Airspace, Incorporation by reference, Navigation (air).

The Proposed Amendment

Accordingly, pursuant to the authority delegated to me, the Federal Aviation Administration proposes to amend 14 CFR part 71 as follows:

PART 71—DESIGNATION OF CLASS A, CLASS B, CLASS C, CLASS D, AND CLASS E AIRSPACE AREAS; AIRWAYS; ROUTES; AND REPORTING POINTS

1. The authority citation for part 71 continues to read as follows:

Authority: 49 U.S.C. 106(g), 40103, 40113, 40120; E.O. 10854, 24 FR 9565, 3 CFR, 1959–1963 Comp., p. 389.

§ 71.1 [Amended]

2. The incorporation by reference in 14 CFR 71.1 of the Federal Aviation Administration Order 7400.9H, Airspace Designations and Reporting Points, dated September 1, 2000, and effective September 16, 2000, is amended as follows:

* * * * *

Paragraph 6005 Class E airspace areas extending upward from 700 feet or more above the surface of the earth.

* * * * *

AGL ND E5 Kenmare, ND [New]

Kenmare Municipal Airport, ND
(Lat. 48°40′03″ N, long. 102°02′51″ W)

That airspace extending upward from 700 feet above the surface within a 6.3-mile radius of the Kenmare Municipal Airport, and that airspace extending upward from 1200 feet above the surface beginning at lat. 49°00′00″ N., long. 103°00′00″ W., to lat. 48°30′00″ N., long. 103°00′00″ W., to lat. 48°30′00″ N., long. 101°00′00″ W., to lat. 49°00′00″ N., long. 101°00′00″ W., thence to the point of beginning, excluding that airspace within the Minot AFB, ND, Mohall, ND, and Tioga, ND, Class E airspace areas.

* * * * *

Issued in Des Plaines, Illinois on October 2, 2000.

Christopher R. Blum,

Manager, Air Traffic Division, Great Lakes Region.

[FR Doc. 00–26824 Filed 10–18–00; 8:45 am]

BILLING CODE 4910–13–M

DEPARTMENT OF TRANSPORTATION

Federal Aviation Administration

14 CFR Part 71

[Airspace Docket No. 00–AGL–27]

Proposed Establishment of Class E Airspace; Warren, MN

AGENCY: Federal Aviation Administration (FAA), DOT.

ACTION: Notice of proposed rulemaking.

SUMMARY: This action proposes to establish Class E airspace at Warren, MN. An Area Navigation (RNAV) Standard Instrument Approach Procedure (SIAP) to Runway 30 has been developed for Warren Municipal Airport. Controlled airspace extending upward from 700 feet above the surface is needed to contain aircraft executing this approach. This action would create Class E airspace for Warren, MN.

DATES: Comments must be received on or before December 1, 2000.

ADDRESSES: Send comments on the proposal in triplicate to: Federal Aviation Administration, Office of the Regional Counsel, AGL–7, Rules Docket No. 00–AGL–27, 2300 East Devon Avenue, Des Plaines, Illinois 60018.

The official docket may be examined in the Office of the Regional Counsel, Federal Aviation Administration, 2300 East Devon Avenue, Des Plaines, Illinois. An informal docket may also be examined during normal business hours

at the Air Traffic Division, Airspace Branch, Federal Aviation Administration, 2300 East Devon Avenue, Des Plaines, Illinois.

FOR FURTHER INFORMATION CONTACT: Denis C. Burke, Air Traffic Division, Airspace Branch, AGL–520, Federal Aviation Administration, 2300 East Devon Avenue, Des Plaines, Illinois 60018, telephone (847) 294–7568.

SUPPLEMENTARY INFORMATION:

Comments Invited

Interested parties are invited to participate in this proposed rulemaking by submitting such written data, views, or arguments as they may desire. Comments that provide the factual basis supporting the views and suggestions presented are particularly helpful in developing reasoned regulatory decisions on the proposal. Comments are specifically invited on the overall regulatory, aeronautical, economic, environmental, and energy-related aspects of the proposal. Communications should identify the airspace docket number and be submitted in triplicate to the address listed above.

Commenters wishing the FAA to acknowledge receipt of their comments on this action must submit with those comments a self-addressed, stamped postcard on which the following statement is made: ''Comments to Airspace Docket No. 00–AGL–27.'' The postcard will be date/time stamped and returned to the commenter. All communications received on or before the specified closing date for comments will be considered before taking action on the proposed rule. The proposal contained in this action may be changed in light of comments received.

All comments submitted will be available for examination in the Rules Docket, FAA, Great Lakes Region, Office of the Regional Counsel, 2300 East Devon Avenue, Des Plaines, Illinois, both before and after the closing date for comments. A report summarizing each substantive public contact with FAA personnel concerned with this rulemaking will be filed in the docket.

Availability

Any person may obtain a copy of this Notice of Proposed Rulemaking (NPRM) by submitting a request to the Federal Aviation Administration, Office of Public Affairs, Attention: Public Inquiry Center, APA–230, 800 Independence Avenue, SW., Washington, DC 20591, or by calling (202) 267–3484. Communications must identify the docket number of this NPRM. Persons interested in being placed on a mailing list for future NRPM's should also request a copy of Advisory Circular No. 11–2A, which describes the application procedure.

The Proposal

The FAA is considering an amendment to 14 CFR part 71 to establish Class E airspace at Warren, MN, by creating Class E airspace for Warren Municipal Airport. Controlled airspace extending upward from 700 feet above the surface is needed to contain aircraft executing instrument approach procedures. The area would be depicted on appropriate aeronautical charts. Class E airspace areas extending upward from 700 feet or more above the surface of the earth are published in paragraph 6005 of FAA Order 7400.9H dated September 1, 2000, and effective September 16, 2000, which is incorporated by reference in 14 CFR 71.1. The Class E designations listed in this document would be published subsequently in the Order.

The FAA has determined that this proposed regulation only involves an establishment body of technical regulations for which frequent and routine amendments are necessary to keep them operationally current. Therefore, this proposed regulation—(1) is not a ''significant regulatory action'' under Executive Order 12866; (2) is not a ''significant rule'' under DOT Regulatory Policies and Procedures (44 FR 11034; February 26, 1979); and (3) does not warrant preparation of a Regulatory Evaluation as the anticipated impact is so minimal. Since this is a routine matter that will only affect air traffic procedures and air navigation, it is certified that this proposed rule will not have a significant economic impact on a substantial number of small entities under the criteria of the Regulatory Flexibility Act.

List of Subjects in 14 CFR Part 71

Airspace, Incorporation by reference, Navigation (air).

The Proposed Amendment

Accordingly, pursuant to the authority delegated to me, the Federal Aviation Administration proposes to amend 14 CFR part 71 as follows:

PART 71—DESIGNATION OF CLASS A, CLASS B, CLASS C, CLASS D, AND CLASS E AIRSPACE AREAS; AIRWAYS; ROUTES; AND REPORTING POINTS

1. The authority citation for part 71 continues to read as follows:

Authority: 49 U.S.C. 106(g), 40103, 40113, 40120; E.O. 10854, 24 FR 9565, 3 CFR, 1959–1963 Comp., p. 389.

§ 71.1 [Amended]

2. The incorporation by reference in 14 CFR 71.1 of the Federal Aviation Administration Order 7400.9H, Airspace Designations and Reporting Points, dated September 1, 2000, and effective September 16, 2000, is amended as follows:

* * * * *

Paragraph 6005 Class E airspace areas extending upward from 700 feet or more above the surface of the earth.

* * * * *

AGL MN E5 Warren, MN [New]

Warren Municipal Airport, MN
(Lat. 48°11′28″ N., long. 96°42′40″ W.)
Point in Space Coordinates
(Lat. 48°04′50″ N., long. 96°31′08″ W.)

That airspace extending upward from 700 feet above the surface within a 6.3-mile radius of the Warren Municipal Airport, and that airspace extending upward from 1200 feet above the surface within the State of North Dakota within a 30.0-mile radius of the Point in Space, excluding that airspace within the Grand Forks, ND, Class E airspace area.

* * * * *

Issued in Des Plaines, Illinois on October 2, 2000.

Christopher R. Blum,

Manager, Air Traffic Division, Great Lakes Region.

[FR Doc. 00–26825 Filed 10–18–00; 8:45 am]

BILLING CODE 4910–13–M

ENVIRONMENTAL PROTECTION AGENCY

40 CFR Part 52

[CT058–7217b; A–1–FRL–6886–6]

Approval and Promulgation of Air Quality Implementation Plans; Connecticut; Changes to Various VOC Regulations

AGENCY: Environmental Protection Agency (EPA).

ACTION: Proposed rule.

SUMMARY: The EPA is proposing to approve a number of State Implementation Plan (SIP) revisions submitted by the State of Connecticut (CT). The revisions consist of changes to various volatile organic compound (VOC) regulations that are currently in the CT SIP. These changes include: revisions to the definition of VOC; revisions to the gasoline loading regulation; revisions to the metal cleaning regulation; revisions to the miscellaneous metal parts and products coating regulation; and revisions to CT's reasonably available control technology for VOC regulation. In addition, EPA is

proposing to approve CT's negative declarations for the synthetic organic chemical manufacturing industry distillation and reactor vessel source categories for which EPA issued control technique guideline documents (CTGs).

In the Final Rules section of this **Federal Register**, EPA is approving: revisions to the definition of VOC; revisions to the gasoline loading regulation; revisions to the metal cleaning regulation; revisions to the miscellaneous metal parts and products coating regulation; and revisions to CT's reasonably available control technology for VOC regulation. EPA is processing these SIP revisions as direct final rules without prior proposal because the Agency views these as noncontroversial submittals and anticipates no adverse comments. A detailed rationale for the approval is set forth in the direct final rule. If no relevant adverse comments are received in response to this action, no further activity is contemplated. If EPA receives relevant adverse comments, the direct final rule will be withdrawn and all public comments received will be addressed in a subsequent final rule based on this proposed rule. EPA will not institute a second comment period. Any parties interested in commenting on this action should do so at this time. Please note that if EPA receives adverse comment on an amendment, paragraph, or section of this rule and if that provision may be severed from the remainder of the rule, EPA may adopt as final those provisions of the rule that are not the subject of an adverse comment.

DATES: Written comments must be received on or before November 20, 2000.

ADDRESSES: Comments may be mailed to David Conroy, Unit Manager, Air Quality Planning , Office of Ecosystem Protection (mail code CAQ), U.S. Environmental Protection Agency, EPA-New England, One Congress Street, Suite 1100, Boston, MA 02114–2023. Copies of the State submittals and EPA's technical support document are available for public inspection during normal business hours, by appointment at the Office of Ecosytem Protection, U.S. Environmental Protection Agency, Region I, One Congress Street, 11th floor, Boston, MA 02114 and the Bureau of Air Management, Department of Environmental Protection, State Office Building, 79 Elm Street, Hartford, CT 06106–1630.

FOR FURTHER INFORMATION CONTACT: Anne E. Arnold, at 617–918–1047.

SUPPLEMENTARY INFORMATION: For additional information, see the direct final rule which is located in the Rules section of this **Federal Register**.

Dated: October 6, 2000.

Mindy S. Lubber,

Regional Administrator, EPA-New England.

[FR Doc. 00–26614 Filed 10–18–00; 8:45 am]

BILLING CODE 6560–50–P

ENVIRONMENTAL PROTECTION AGENCY

40 CFR Part 52

[MD 058–3036 and VA 083–5038; FRL–6888–8]

Approval and Promulgation of Air Quality Implementation Plans; Maryland and Virginia; Post-1996 Rate-of-Progress Plan for the Metropolitan Washington, DC Area

AGENCY: Environmental Protection Agency (EPA).

ACTION: Notice of proposed rulemaking.

SUMMARY: EPA is proposing approval of the Post-1996 plan for the Metropolitan Washington, DC ozone nonattainment area submitted by the Maryland Department of the Environment and the Virginia Department of Environmental Quality. The Maryland Department of the Environment and the Virginia Department of Environmental Quality each submitted the Post-1996 plan as a State Implementation Plan (SIP) revision for the Metropolitan Washington, DC serious ozone nonattainment area to meet the 9% rate-of-progress (ROP) requirement (the Post-1996 plan) of the Clean Air Act (the Act). The Post-1996 plan will result in significant emission reductions through 1999 from the 1990 baseline emissions of volatile organic compounds (VOCs) and oxides of nitrogen (NO_X), which contribute to the formation of ground level ozone.

DATES: Written comments must be received on or before November 9, 2000.

ADDRESSES: Written comments may be mailed to David L. Arnold, Chief, Ozone and Mobile Sources Branch, Mailcode 3AP21, U.S. Environmental Protection Agency, Region III, 1650 Arch Street, Philadelphia, Pennsylvania 19103. Copies of the documents relevant to this action are available for public inspection during normal business hours at the Air Protection Division, U.S. Environmental Protection Agency, Region III, 1650 Arch Street, Philadelphia, Pennsylvania 19103; Maryland Department of the Environment, 2500 Broening Highway, Baltimore, Maryland, 21224; and Virginia Department of Environmental Quality, 629 East Main Street, Richmond, Virginia 23219.

FOR FURTHER INFORMATION CONTACT: Janice Lewis at (215) 814–2185 or Christopher Cripps at (215) 814–2179 at the EPA Region III office above.

SUPPLEMENTARY INFORMATION:

What Action is EPA Proposing Today?

EPA is proposing approval of the Post-1996 plan submitted by the State of Maryland and the Commonwealth of Virginia for the Metropolitan Washington, DC ozone nonattainment area (the Washington area).

What Are the Rate-of-Progress Requirements Applicable to the Washington Area?

The Act requires that serious and above ozone nonattainment areas develop plans to reduce area-wide VOC emissions after 1996 by 3% per year until the year of the attainment date required for that classification of nonattainment area. This is commonly referred to as the Post-1996 plan. In this case, the Washington area is classified as a serious ozone nonattainment area; the serious area attainment date is 1999. The 3% per year requirement is expressed as an average over consecutive 3-year periods; thus, the requirement is a 9% reduction by 1999. This 9% reduction requirement is a continuation of the requirement for a 15% reduction in VOC by 1996. For the Post-1996 plan, the Act allows the substitution of NO_X emissions reductions for VOC emission reductions where equivalent air quality benefits are achieved as determined using the applicable EPA guidance. The 9% VOC/NO_X reduction required by November 15, 1999 is a demonstration of reasonable further progress in the Washington area, which is referred to as rate-of-progress (ROP) throughout this document. Our assessment of the Post-1996 plan is to determine whether or not the 9% reduction requirement is met.

What Areas are Covered by the Post-1996 Plan for the Washington Area?

The Washington area consists of the District of Columbia, the Northern Virginia area (Arlington, Fairfax, Loudoun, Prince William and Stafford Counties and the cities of Alexandria, Falls Church, Fairfax, Manassas, and Manassas Park), and Calvert, Charles, Frederick, Montgomery, and Prince George's Counties in Maryland.

What Agencies and Organizations Developed Maryland and Virginia Post-1996 Plan for Metropolitan Washington, DC Area?

The District of Columbia, Virginia and Maryland must demonstrate ROP for the Washington area. These jurisdictions, under the auspices of the Metropolitan Washington Air Quality Committee (MWAQC) with the assistance of the Metropolitan Washington Council of Governments (COG) collaborated on a coordinated Post-1996 plan for the Washington area. The MWAQC includes state and local elected officials and representatives of the Washington, DC Department of Health (DoH), the Maryland Department of the Environment (MDE), the Virginia Department of Environmental Quality (VADEQ) and the National Capital Region Transportation Planning Board (TPB). The Act provides for interstate coordination for multi-state nonattainment areas.

Because ROP requirements such as the Post-1996 plan establish emission budgets for transportation improvement plans, municipal planning organizations have historically been involved in air quality planning in the Washington area. The MWAQC ensures consultation with the TPB during the development of the Post-1996 plan and emission budgets. As explained below, the regional Post-1996 plan determined the regional target level, regional projections of growth and finally the total amount of creditable reductions required under the 9% requirement in the Washington area. The District of Columbia, Maryland and Virginia all agreed to apportion this total amount of required creditable reductions among themselves.

Although the plan was developed by a regional approach, each jurisdiction is required to submit the Post-1996 plan to EPA as a revision to its SIP. This proposed rulemaking only addresses the Post-1996 plans submitted by Maryland and Virginia for the Washington area.

When Did Maryland and Virginia Submit the Post-1996 Plan for the Metropolitan Washington, DC Area?

The MDE submitted the area-wide Post-1996 plan as a SIP revision on December 24, 1997. The VADEQ submitted the area-wide Post-1996 plan as a SIP revision on December 19, 1997. On May 20, 1999 and May 25, 1999, respectively, the MDE and the VADEQ each submitted a revised Post-1996 plan for the Washington area that supplanted the 1997 submissions.

What Action is EPA Taking on the District of Columbia's Post-1996 Plan for the Metropolitan Washington, DC Area?

The District submitted a Post-1996 plan for the Washington area on November 3, 1997, and submitted a revision to that plan on May 25, 1999. In the September 28, 2000 **Federal Register**, EPA published its proposed approval of the Post-1996 plan submitted by the District's DoH (65 FR 58243).

What Are the Effects on Emissions and How is the 3% per Year Reduction Calculated?

A Post-1996 plan consists of a plan to achieve a target level of emissions. There are several important emission inventories and calculations associated with the plan. These include: the base year emission inventory, future year projection inventories, and target level calculations. Each of these is described below.

A. Base Year Emission Inventory

EPA reviewed the 1990 base year emissions inventory and the revisions to this inventory submitted with the Post-1996 plan, and has approved these revisions for both jurisdictions (63 FR 36854, July 8, 1998). The 1990 ROP inventory for the Washington area, which is fundamental to the Post-1996 plan, is the 1990 base year emissions inventory excluding biogenic emissions. The 1990 base year inventory is contained in the states' submittals.

B. Projection Inventories—Growth in Emissions

A projection of growth in VOC and NO_X emissions from 1990 to 1999 is required for the 9% requirement. Growth in VOC emissions from 1990 to 1996 was described in the 15% plans, thus the remaining VOC growth from 1996 to 1999 is described in the Post-1996 plan. To meet the 9% requirement, a state (or states for a multi-jurisdictional nonattainment area) must enact measures achieving sufficient emissions reductions to offset projected growth in emissions, in addition to achieving a 9% reduction of VOC/NO_X emissions from baseline levels through 1999. This requirement may be satisfied by determining the amount of creditable emission reductions needed to offset growth in VOC emissions from 1996 to 1999 and in NO_X emissions from 1990 to 1999. The calculation can be made by projecting the 1990 base year VOC inventory out to 1999 considering only the current control strategy. Growth must be determined separately for each source or source category, since sources typically grow at different rates.

The Post-1996 plan for the Washington area contains growth projections for stationary, area, on-road motor vehicle, and non-road vehicle source categories using acceptable growth factor surrogates. A more detailed description of the states' submittals and EPA's evaluation are included in a Technical Support Document (TSD) prepared in support of this rulemaking action. A copy of the TSD is available, upon request, from the EPA Regional Office listed in the **ADDRESSES** section of this document. EPA has determined that the methodology used in Maryland's and Virginia's Post-1996 plan submittals for selecting growth factors and applying them to the 1990 base year emissions inventory to estimate emissions growth in point, area, on-road mobile, and off-road mobile sources (from 1996 to 1999 for VOC and from 1990 to 1999 for NO_X) is approvable.

C. Calculation of Target Level Emissions and Substitution of NO_X Reduction

1. 15% VOC Target Level: The Act requires that the SIP achieve a reduction of 9% of the 1990 baseline emissions after November 15, 1996 and before November 15, 1999. This reduction is in addition to a 15% reduction in base line emissions by 1996. This 15% requirement is referred to as the 15% plan. Under EPA's guidance, the starting point for calculating the Post-1996 plan's target level of VOC emissions is the target level of VOC emissions for 1996 found in the 15% plan.

2. 1999 VOC Target Level: For the VOC portion of the 9% reduction requirement, the 1999 VOC emissions target level is calculated as follows:

a. The 1990 base year emission inventory is adjusted to account for the effects of certain motor vehicle and gasoline volatility control programs. One of these is the Federal Motor Vehicle Control Program (FMVCP) standards implemented before 1990, called Tier 0 FMVCP. The second of these programs is the second phase of EPA's Reid Vapor Pressure (Phase II RVP) regulations, implemented in 1992. To calculate these effects, projected 1999 emission factors that will result from Tier 0 FMVCP and RVP were calculated using EPA's MOBILE5b model. These 1999 ''adjusted'' emission factors are multiplied by the 1990 Vehicle Miles Traveled (VMT) to determine the 1990 adjusted base year VOC emissions inventory for 1999 which determines the effects of the Tier 0 FMVCP between 1996 and 1999 on the 1990 ROP emissions inventory. This is

done for the entire Washington area and includes a breakdown by jurisdiction.

b. Because the plan uses NO_X substitution, the Washington area does not have to reduce VOC base line emissions by 9% but can use a smaller percentage as long as sufficient NO_X reductions are achieved. The Post-1996 plan is based upon a 1% VOC reduction and a 8% NO_X reduction.

c. The effect on baseline emissions by Tier 0 FMVCP between 1996 and 1999 must be considered. EPA's guidance requires the determination of the Fleet Turnover Correction from 1996 to 1999 to account as for the turnover of vehicles between 1996 and 1999. This correction is the difference of the 1990 adjusted base year VOC emissions inventory for 1996 and the1990 adjusted base year VOC emissions inventory for 1999.

d. The base 1% VOC reduction and the fleet correction term are summed, then subtracted from the 1996 VOC target level to yield the 1999 VOC target level of emissions.

3. 1999 NO_X Target Level: The Post-1996 plan for the Washington area uses NO_X substitution. The 1999 NO_X target level of emissions is calculated in a manner similar to the 1996 VOC target level except the base year inventory is adjusted to 1999, rather than to 1996. There are no reductions from corrections made to Reasonably Available Control Technology (RACT) and to Inspection and Maintenance (I/M) rules. The Post-1996 plan uses a 8% NO_X reduction. The reductions from Tier 0 FMVCP and Phase II RVP (from 1990 to 1999) are the difference between the 1990 NO_X ROP emissions inventory and the 1990 adjusted base year NO_X emissions inventory for 1999. Therefore, the 1999 NO_X target level is the 1990 NO_X ROP emissions inventory less Tier 0 and Phase II RVP reductions from 1990 to 1999 and the 8% NO_X reduction. This calculation is contained in the states' submittals.

4. 15% Plan revisions: For areas impacted by delays in implementing an enhanced I/M program, EPA's guidance (*''Guidance on the Adjusted Base Year Emissions Inventory and 1996 Target for the 15% Rate-of-Progress Plans,''* EPA–452/R–92–005) allows approval of the 15% plan if the 15% reduction is achieved after 1996 when certain criteria are met. One criterion is a showing that the 15% reduction is achieved no later than November 15, 1999. This guidance establishes a slightly different demonstration of ROP by modifying the calculation of the 1996 VOC target level. The base 1996 target level is just 85% of the 1990 adjusted base year VOC emissions inventory for 1996. To account for 1996 to 1999 reductions in ''baseline emissions'' from Tier 0 FMVCP, the fleet turnover correction for 1996 to 1999 is subtracted from the ''base'' 1996 target level to yield the 1996 target level of emissions corrected for the Fleet Turnover Correction for 1996 to 1999. If a state's 15% plan for an area is approved under this guidance, the state does not need to subtract the fleet turnover correction for 1996 to 1999 from the final 15% plan target level as discussed in C.2. ''1999 VOC Target Level'' above, when calculating the 1999 VOC target level because this fleet turnover correction will have already been included in the 15% target level. The District, the State of Maryland and the Commonwealth of Virginia all submitted such plans (the revised 15% plan). The EPA has already acted upon and approved these revised 15% plans in separate rulemaking actions. The target level calculations and the amount of creditable emission reductions needed for the entire Washington area to fulfill the 9% requirement are summarized Table 1 below.

TABLE 1.—TARGET LEVEL AND EMISSION REDUCTION NEEDS FOR THE METROPOLITAN WASHINGTON, DC AREA THROUGH 1999

[Tons/day]

	VOC	NO_X
1 Starting Emissions Level:		
15% target Level for VOC	384.6	.....
1990 ROP Base Year Inventory for NO_X	.....	730.9
2 1990 to 1999 Tier 0 FMVCP and Phase II RVP Reductions	[a] 0.0	62.8
3 ROP Reduction:		
1% VOC	4.4	.....
8% NO_X	.....	53.4
4 1999 Target Level (Row 1 minus Row 2 minus Row 3)	380.2	614.7
5 1999 Uncontrolled Emissions	511.7	765.2
6 Total Reductions Needed to make ROP by 1999	131.5	150.5

Notes:
[a] Included in the 15% Target Level.

5. NO_X Substitution: EPA issued guidance for NO_X substitution in Post-1996 plans in December 1993 and supplemental guidance on August 5, 1994. This guidance sets an equivalency test for VOC and NO_X reductions and requires that the level of NO_X substitution be supported by photochemical grid modeling. The equivalency test essentially sets two criteria. The first criterion is that the plan must set the 1999 target levels for VOC and NO_X emissions using a total percent reduction in VOC emissions plus the percent reduction in NO_X emissions that is greater than or equal to nine percent (9%). In this case, the Post-1996 plan target levels are calculated using a 1% VOC reduction and 8% NO_X reduction. The second criterion is that the Post-1996 plan achieve sufficient VOC and NO_X reductions to ensure that the projected 1999 VOC and NO_X emissions will be less than or equal to the respective target levels in the Post-1996 plan. EPA analysis of whether the plan provides for sufficient NO_X and VOC reductions is discussed below in under the heading ''What control strategies are Maryland and Virginia including in the Post-1996 Plan?''

EPA's guidance requires that the amount of substituted NO_X reductions in the Post-1996 plan be less than or equal to the amount of NO_X reductions needed to attain the national ambient air quality standard for ozone. The amount of NO_X reductions needed for attainment must be demonstrated by photochemical grid modeling. The demonstration that the NO_X substitution which was submitted by Maryland and Virginia is based upon local scale modeling performed for the Baltimore-

Washington Urban Airshed Modeling (UAM) domain and upon EPA's Regional Oxidant Modeling (ROM) results. Both EPA's ROM results and the photochemical grid modeling submitted with the attainment plan show that significant NO_X reductions will contribute to attainment in the area. The local UAM modeling also shows that NO_X reductions, beyond those contained in the Post-1996 plan, provide reductions in ozone concentrations. The Post-1996 plan substitutes fewer NO_X reductions than assumed in the attainment plan modeling. EPA has, therefore, determined that the NO_X for VOC substitution in the Post-1996 plan is adequately supported by creditable photochemical grid modeling and meets the requirements of EPA's NO_X substitution guidance. EPA has determined that its NO_X substitution guidance was properly followed and the proper methodology was used to calculate the 1999 NO_X and VOC target levels. Therefore, for purposes of determining the 1999 NO_X and VOC target levels, 6.7 tons of NO_X must be substituted for every 4.4 tons of VOC.

EPA believes that following our NO_X substitution guidance is legally sufficient to demonstrate that any NO_X substitution in an ROP plan meets the equivalency requirements of the Act. The local UAM modeling submitted with the attainment demonstration also supports the conclusion that, on a ton for ton basis, NO_X reductions achieve at least equivalent changes in ozone concentrations as an equivalent reduction in VOC emissions.

D. Nonattainment Area-Wide Plan—Apportionment of Reduction Needs

EPA must determine whether or not the Washington area 9% requirement has been met. In general, the emission reduction from a measure is the difference of the future year projected uncontrolled emissions and the future year controlled emissions, or is equal to a percentage of the future year projected uncontrolled emissions. For on-road mobile sources, the emission reductions from a measure or suite of measures are determined by the difference of projected future year emissions without and with new control measures.

The regional nonattainment area-wide Post-1996 plan apportions among the District, Maryland and Virginia the amount of creditable emission reductions that each state must achieve in order for the nonattainment area to achieve, on an area wide basis, the required 9% reduction in VOC net of growth. The Post-1996 plan identifies the amount of creditable emission reductions that each state must achieve for the nonattainment area-wide plan to get a 9% reduction accounting for any growth in emissions from 1990 to 1999.[1] Maryland and Virginia committed to achieving the necessary NO_X and VOC reductions, found in Table 2 below. This proposed rulemaking action only concerns commitments submitted by Maryland and Virginia.

TABLE 2.—EMISSION REDUCTION COMMITMENTS FOR THE METROPOLITAN WASHINGTON, DC AREA THROUGH 1999

[Tons/day]

	District of Columbia	Maryland	Virginia	Area total
Total VOC reduction by 1999	10.6	63.7	57.2	131.5
Total NO_X reduction by 1999	7.2	96.8	46.6	150.6

Because the Post-1996 plan for the Washington area was developed using a regional approach, the required VOC and NO_X emission reductions for each jurisdiction have been apportioned using a ratio of the regional reduction requirement to the claimed creditable measures for the nonattainment area. This result was then multiplied by each jurisdiction's total creditable measures to determine its emission reduction requirement. EPA has determined that this apportionment of the emission reduction needed for ROP is approvable because the Act provides for interstate planning of SIPs, and because the all three jurisdictions have committed to achieve, in the aggregate, sufficient reductions to achieve this 9% requirement in the entire nonattainment area.

What Control Strategies Are Maryland and Virginia Including in the Post-1996 Plan?

The Post-1996 plan describes the emission reduction credits that the Washington area jurisdictions are claiming toward their 9% reduction requirement. Credit towards Maryland's and Virginia's 1996 ROP requirement will be given for state measures if only those reductions derive from a SIP-approved state rule. These control measures are described in more detail in the TSD for this rulemaking. The Post-1996 plan for the Washington area claims VOC and NO_X emission reductions from the following measures:

1. Stage I Vapor Recovery: This measure reduces VOC emissions during the filling of gasoline storage tanks at gasoline stations and other facilities where gasoline is dispensed. Maryland and Virginia amended state regulations to require this control measure in additional counties where this measure was not required in 1990. Therefore, 1.2 TPD in emissions reductions in the Maryland and Virginia portions of the Washington area from Stage I are creditable towards the 9% reduction requirement.

2. Seasonal Open Burning Ban: Maryland and Virginia adopted state regulations to ban open burning during the peak ozone season. EPA has determined that the 6.3 TPD VOC and 1.4 TPD NO_X from this measure is fully creditable toward the Post-1996 VOC and NO_X reduction requirements in the Maryland and Virginia portions of the Washington area.

3. Architectural and Industrial Maintenance (AIM) Coatings Reformulation: This federal rule (63 FR 48819, September 11, 1998), which reduces emissions from architectural coatings and industrial maintenance coatings, allows credit for a 20% reduction in VOC emissions, which is 12.2 TPD for in the Maryland and Virginia portions of the Washington area in the Post-1996 plan. EPA has determined that this reduction is creditable.

4. Consumer and Commercial Products: This federal rule (63 FR 48848, September 11, 1998) allows states to claim a 20% reduction from 1999 VOC emissions from 24 categories of consumer products. The Post-1996 plan claim of 4.1 TPD in emission reductions from this measure in the

[1] The plan projects all growth in emissions to 1999 from the 1990 base year emissions inventory levels. Thus the amount of emission reductions needed to account for growth in VOC emissions from 1990 to 1999 would be the sum of the growth in emissions from 1990 to 1996 which had to be addressed in the 15% plan plus growth in VOC emissions from 1996 to 1999.

Maryland and Virginia portions of the Washington area is creditable.

5. Autobody Refinishing: The federal rule to control VOC emissions from autobody refinishing (63 FR 48806, September 11, 1998) applies in Virginia. EPA's rule will achieve a 33% nationwide reduction or a 36% reduction after removal of those states that already had a rule at the time the baseline was determined are removed from the baseline. Maryland and Virginia did not have a rule at the time the baseline was developed. EPA can allow a 36% emissions reduction Virginia. Virginia claimed a 35.7% reduction. The total creditable autobody refinishing emissions reductions in the Post-1996 plan is 2.7 TPD in the Virginia portion of the Washington area. Maryland has adopted a state rule that has additional requirements from just the VOC content requirements of the federal rule. Maryland claims a 45% VOC reduction from this control measure which EPA finds is reasonable. The total creditable autobody refinishing emissions reductions in the Post-1996 plan is 3.8 TPD in the Maryland portion of the Washington area.

6. Graphic Arts: Maryland and Virginia adopted state regulations to reduce emissions from lithographic printing operations. The VOC emissions reduction claimed in the Post-1996 plan from graphic arts is 2.5 TPD in the Maryland and Virginia portions of the Washington area.

7. Surface Cleaning Operations: Maryland and Virginia amended existing regulations for surface cleaning (also called cold cleaning and degreasing) devices and operations to require more stringent emission controls techniques and enlarges the universe of applicable sources. Maryland has adopted a state rule and claims in the Post-1996 plan reductions of 2.9 TPD VOC from this measure in the Maryland portion of the Washington area. Virginia has adopted a state rule but claims no emission reduction benefits in the plan.

8. Non-road Gasoline Engines Rule: This Federal measure takes credit for VOC emission reductions from emissions standards for small non-road, spark-ignition utility engines (40 CFR part 90, subpart A, 60 FR 34598, July 3, 1995). This measure affects non-road equipment rated at or below 25 horsepower. Maryland and Virginia claimed reductions of 13.1 TPD VOC in their portions of the Washington area. The rule also results in a 1.0 TPD increase in NO_X emissions in the Maryland and Virginia portions of the Washington area. The VOC reductions are creditable toward the reduction requirement, and the NO_X emission increase is included in the plan.

9. Non-road Diesel Engines Rule: The Federal rule (40 CFR 89, 59 FR 31306, June 17, 1994) controls NO_X emissions from non-road, diesel powered utility engines, affecting diesel-powered construction equipment, industrial equipment, etc., rated at or above 50 horsepower. The Post-1996 plan claimed 6.9 TPD in NO_X reductions from this measure, which is acceptable toward the 9% reduction requirement in the Maryland and Virginia portions of the Washington area.

10. State NO_X Requirements: Maryland and Virginia adopted state regulations to require the application of RACT on NO_X sources in the Washington area. The Post-1996 plan claims a total 67.9 TPD from this NO_X emission control in the Maryland counties in the Washington area. Elsewhere in today's **Federal Register** EPA has proposed approval of Maryland's NO_X RACT rule. Therefore, the 67.9 TPD NO_X reduction through 1999 will be creditable toward the 9% reduction requirement once EPA approves Maryland's NO_X RACT rule. The Post-1996 plan claims 12.0 TPD from this NO_X emission control in Northern Virginia. EPA has proposed full approval of Virginia's source-specific RACT determinations (issued pursuant to its NO_X RACT regulation) in a recent **Federal Register** document (65 FR 60141). Therefore, the 12.0 TPD emission reductions in NO_X through 1999 will be creditable toward the 9% reduction requirement once EPA approves emission limitations for enough sources to fulfill Virginia's NO_X reductions needs under the Post-1996 plan.

11. Stage II Vapor Recovery: Maryland and Virginia adopted state regulations to require gasoline vapor recovery controls at gas stations to reduce emissions from the fueling of gasoline-powered motor vehicles. Thus, the 16.8 TPD reduction from Stage II in the Maryland and Virginia portions of the Washington area Post-1996 plan is creditable toward the ROP requirement.

12. Enhanced Vehicle Inspection and Maintenance: Maryland and Virginia adopted state regulations to implement enhanced I/M programs. The Post-1996 plan uses the MOBILE5b model to determine the enhanced I/M emission benefits. The MOBILE5b model reflects this more current enhanced I/M program. We are approving the 18.0 TPD VOC and 14.8 TPD NO_X reductions from Maryland's enhanced I/M program toward the Post-1996 ROP requirement. We are approving the 17.9 TPD VOC and 16.9 TPD NO_X emission reduction benefits from enhanced I/M in the Post-1996 plan.

13. RFG Refueling Benefits: This control measure takes credit for lower refueling emissions resulting from federally mandated reductions in gasoline volatility. The measure affects VOC emissions from light-duty gasoline vehicles and trucks. Phase II gasoline volatility VOC emission reductions are associated with reformulated gasolines sold in Washington area. The Phase II benefit claimed in the Post-1996 plan for the Maryland and Northern Virginia portions of the Washington area is 1.6 TPD VOC. EPA has determined that the emission reductions are creditable toward the reduction requirement of the Post-1996 plan.

14. Reformulated Gasoline (RFG)—On road: Section 211(k) of the Act requires that only reformulated gasoline (RFG), designed to burn cleaner and produce fewer evaporative emissions, be sold and dispensed in severe and above ozone nonattainment areas. The Act specifies a minimum oxygen content of 2% and maximum 1% benzene content beginning in 1995. Section 211(k)(6) allows other nonattainment areas to ''opt in'' to the program to achieve creditable VOC emission reductions. EPA approved the requests of Maryland and Virginia to opt their Washington area counties into the RFG program. The emission reduction benefit from the opt-in to this Federal program in the Post-1996 plan is 13.7 TPD VOC and 0.2 TPD NO_X in the Maryland and Northern Virginia portions of the Washington area from on-road mobile sources as determined using MOBILE5b.

15. Reformulated Gasoline—Off-Road: The benefits of RFG will be realized in both on-road and off-road gasoline engines, such as lawn maintenance equipment and motor boats. EPA enforces this program so the emission reductions are fully enforceable. The VOC emission reduction benefit claimed for non-road RFG in the Post-1996 plan for the Maryland and Northern Virginia portion in the Washington area is 2.2 TPD. The Washington area states use the guidance provided on August 18, 1993 by EPA's Office of Mobile Sources on the VOC emission benefits from non-road equipment in a nonattainment area using Federal Phase I RFG. The Post-1996 plan has correctly used the guidance to compute the VOC emission reductions for this measure. To the extent this measure results in quantifiable reductions before 1999, the 2.2 TPD emission benefit resulting from this measure are creditable toward the Post-1996 plan.

16. Tier 1 New Vehicle Standards: The Act requires EPA to issue standards

under the FMVCP for new motor vehicles. The first of these were implemented in 1994 and are called Tier 1 FMVCP. These standards include exhaust (''tailpipe'') emission standards and better evaporative emission controls demonstrated through new federal evaporative test procedures. EPA promulgated this program (56 FR 25724, June 5, 1991) so the emission reductions are fully enforceable. The Post-1996 plan used the MOBILE5b model to determine the emission benefits of 11.4 TPD VOC and 28.4 TPD NO_X. These reductions are fully creditable toward the 9% reduction requirement.

17. National Low Emissions Vehicle (NLEV): The National Low Emission Vehicle (NLEV) program is a nationwide clean car program not mandated by the Act, designed to reduce ground level ozone (or smog) and other air pollution emitted from newly manufactured motor vehicles. On June 6, 1997 (62 FR 31192) and on January 7, 1998 (63 FR 926), EPA promulgated rules outlining the framework for the NLEV program. These NLEV regulations allow auto manufacturers to commit to meet tailpipe standards for cars and light-duty trucks that are more stringent than EPA could otherwise mandate under the authority of the Act. The regulations provided that the program would come into effect only if Northeast states and auto manufacturers agreed to participate. On March 9, 1998 (63 FR 11374), EPA published a finding that the program was in effect. Nine northeastern states including Maryland and Virginia, the District of Columbia, and 23 auto manufacturers had opted to participate in the NLEV program. Once in effect, the NLEV Program became enforceable in the same manner as any other Federal new motor vehicle emission control program.

The NLEV Program will result in substantial reductions in VOC and NO_X emissions which contribute to unhealthy levels of smog in many areas across the country. NLEV vehicles are 70% cleaner than those otherwise required under the Act. In the Northeast States, the phase-in of the NLEV vehicles began with model year 1999 vehicles. In addition, the program provides substantial harmonization of Federal and California new motor vehicle standards and test procedures, which enables manufacturers to move towards the design and testing of vehicles to satisfy one set of nationwide standards. A SIP revision from each participating northeastern state is required as part of the agreement between states and automobile manufacturers to ensure the continuation of the National LEV Program to supply clean cars throughout most of the country. On December 28, 1999, we approved Maryland's and Virginia's NLEV SIP (64 FR 72564). The 1.9 TPD VOC and 1.8 TPD NO_X reductions in the Maryland and Virginia portions of the Washington area are fully creditable toward the 9% reduction requirement.

18. Transportation Control Measures (TCMs): TCMs are strategies to both reduce VMT and decrease the amount of emissions per VMT, and are considered an essential element of control strategies for nonattainment areas. The Act classifies TCMs as programs for improved transit, traffic flow, fringe parking facilities for multiple occupancy transit programs, high occupancy or share-ride programs, and support for bicycle and other non-automobile transit. The Post-1996 plan includes TCM projects programmed between fiscal years 1994–1999 in the transportation improvement plan (TIP) under the Congestion Mitigation and Air Quality (CMAQ) Improvement Program and funded for implementation in the Washington area. The specific projects the States are claiming credit for and the estimated benefits, totaling 0.2 TPD VOC and 0.4 TPD NO_X, are listed in Appendix H of the submittal. TCMs are considered acceptable measures for states to use to achieve reductions. EPA has determined that the 0.2 TPD VOC and 0.4 TPD NO_X reductions are creditable for the Post-1996 plan. EPA is proposing to approve into the Maryland and Virginia SIPs several TCMs creditable to the post-1996 and attainment demonstration.

19. Non-CTG RACT to 50 TPY: The Act requires that moderate and above ozone nonattainment areas adopt rules to require RACT for all VOC sources in the nonattainment area, not already covered by any Control Technique Guideline (CTG) issued by EPA, that have potential emissions of greater than or equal to 50 TPY. The following table identifies RACT sources which Maryland and Virginia have taken credit for in the Post-1996 plan.

MARYLAND

[Non-CTG RACT to 50 tpy]

Giant Food Bakery	SIP approved October 15, 1997 [62 FR 53544] 40 CFR 52.1070(c)(125)(i)(B)(4).
Bill Carins Pontiac	SIP approved October 15, 1997 [62 FR 53544] 40 CFR 52.1070(c)(124).
Frederick Motor Co	SIP approved October 15, 1997 [62 FR 53544] 40 CFR 52.1070(c)(124).
Herb Gordon's Auto World	SIP approved October 15, 1997 [62 FR 53544] 40 CFR 52.1070(c)(124).
Safeway Bread	SIP approved October 15, 1997 [62 FR 53544] 40 CFR 52.1070(c)(125)(i)(B)(*4*).
Can Am Steel	Structural Steel Coating Reg.—SIP approved June 17, 1999 (64 FR 32415) 40 CFR 52.1070(c)(142).

VIRGINIA

[Non-CTG RACT to 50 tpy]

Tuscarora Plastics	SIP approved: 64 FR 3425 January 22, 1999. 40 CFR 52.2420(c)(128).
Insulated Building Systems	Shut-down source (January 1991).
Treasure Chest Ad	SIP Approved March 12, 1997 (62 FR 11332) 65 FR 60141.
Cellofoam	Proposed Approval October 10, 2000 65 FR 60141.

20. RACT on Additional Sources: Maryland and Virginia adopted state regulations to apply RACT regulations for all CTG and non-CTG point sources with the potential to emit between 25 and 50 TPY VOC not already regulated or required to be regulated (For some CTG categories, the State regulations existing in 1990 already applied to sources below 25 TPY.) Virginia has adopted state regulation but claims no emission reduction benefits in this plan. Maryland has identified sources below that claimed emission reduction credits through approved state regulations.

EXPANDED STATE POINT SOURCE REGULATIONS TO 25 TONS/YEAR

Stone Industrial	SIP approved March 22, 1999 (64 FR 57989) 40 CFR 52.1070(c)(145).
Andrews Air Force Base—Storage and transfer requirements for gasoline apply to aviation fuels with vapor pressure over 1.5 psi.	SIP approved Dec. 22, 1998, (63 FR 70667) 40 CFR 52.1070(c)(130).

21. Landfill Emissions: This measure regulates VOC emissions from municipal landfills in the Washington area. In Northern Virginia, the emission reduction benefit is 0.3 TPD. The emission reduction is achieved through Virginia's SIP-approved Federally Enforceable State Operating Permit—FESOP program, which makes the permit federally enforceable and is creditable toward the 9% reduction requirement. Maryland has a federally approved state 111(d) plan for its municipal landfills. Therefore, the emission reduction benefits for this plan are 1.2 TPD.

What Are the Total Reductions in the Post-1996 Plan?

Tables 3 and 4 summarize the creditable measures in Maryland's and Virginia's Post-1996 plan.

TABLE 3.—CREDITABLE VOC EMISSION REDUCTIONS IN THE POST-1996 PLAN FOR THE METROPOLITAN WASHINGTON, D.C. AREA

[Tons/day]

Measure	Maryland	Virginia
Tier 1 FMVCP	5.5	5.9
RFG Refueling Benefits	0.9	0.7
NLEV	0.6	1.3
Reformulated Gasoline (on/off road)	7.9	8.0
Surface Cleaning/Degreasing	2.9	0.0
Autobody Refinishing	3.8	2.7
AIM	6.6	5.6
Consumer Products	2.2	1.9
Seasonal Open Burning Ban	3.7	2.6
Graphic Arts	1.0	1.5
Landfill Regulations	0	0.3
Non-CTG RACT to 50 TPY	0.4	0.4
RACT on Additional Sources >25 TPY and <50 TPY	0.3	0
Stage II Vapor Recovery	8.9	7.9
Stage I Enhancement (excluding Loudoun County, VA)	0.9	0.3
Non-road Gasoline Engines Rule	6.3	6.8
TCMs	0.1	0.1
Enhanced I/M	18.0	17.9
Total Creditable Reductions	71.2	63.9

TABLE 4.—CREDITABLE NO_X EMISSION REDUCTIONS IN THE POST-1996 PLAN FOR THE METROPOLITAN WASHINGTON, DC AREA

[Tons/day]

Measure	Maryland	Virginia
Enhanced I/M	14.8	16.9
Tier 1	13.7	14.7
NLEV	0.3	1.5
Reformulated Gasoline (on-road)	0.1	0.1
Non-road Gasoline Engines	−0.4	−0.5
Non-road Diesel Engines	3.7	3.2
State NO_X RACT	67.9	12.0
Open Burning Ban	0.8	0.6
TCMs	0.2	0.2
Total Creditable Reductions	101.1	48.7

Based upon the measures listed in the above tables, EPA has determined the Post-1996 plan submitted by Maryland and Virginia for the Washington area will achieve the required reductions to enable Maryland and Virginia to meet its reduction commitments in the Post-1996 plan for the Metropolitan Washington, DC area. Thus, Maryland's and Virginia's Post-1996 plans meet the 9% VOC emission reduction of the requirements of the Act.

What Are the Transportation Conformity Budgets in the Post-1996 Plan?

Under EPA's transportation conformity rule, the Post-1996 plan is a control strategy SIP under the Transportation Conformity Rule (62 FR 43779, August 15, 1997). A control

strategy SIP establishes budgets to which federally funded and approved transportation projects and plans must conform. The Post-1996 plan establishes VOC and NO_X budgets for the Washington area that are applicable for determinations for 1999 and are applicable in later years in the absence of other applicable budgets. The Post-1996 plan adopts and establishes the following transportation conformity budgets for the entire Washington area: a VOC budget for 1999 of 128.5 TPD, and a NO_X budget for 1999 of 196.4 TPD. On August 11, 1999, we announced that these motor vehicle emissions budgets were adequate for transportation conformity purposes effective August 26, 1999 (64 FR 43698, August 11, 1999) EPA's proposed action is to propose approval of these budgets for the Metropolitan Washington, DC area into the Maryland and Virginia SIP.

Virginia's Immunity Law

In 1995, Virginia adopted legislation that provides, subject to certain conditions, for an environmental assessment (audit) ''privilege'' for voluntary compliance evaluations performed by a regulated entity. The legislation further addresses the relative burden of proof for parties either asserting the privilege or seeking disclosure of documents for which the privilege is claimed. Virginia's legislation also provides, subject to certain conditions, for a penalty waiver for violations of environmental laws when a regulated entity discovers such violations pursuant to a voluntary compliance evaluation and voluntarily discloses such violations to the Commonwealth and takes prompt and appropriate measures to remedy the violations. Virginia's Voluntary Environmental Assessment Privilege Law, Va. Code Sec. 10.1–1198, provides a privilege that protects from disclosure documents and information about the content of those documents that are the product of a voluntary environmental assessment. The Privilege Law does not extend to documents or information (1) that are generated or developed before the commencement of a voluntary environmental assessment; (2) that are prepared independently of the assessment process; (3) that demonstrate a clear, imminent and substantial danger to the public health or environment; or (4) that are required by law.

On January 12, 1997, the Commonwealth of Virginia Office of the Attorney General provided a legal opinion that states that the Privilege law, Va. Code Sec. 10.1–1198, precludes granting a privilege to documents and information ''required by law,'' including documents and information ''required by federal law to maintain program delegation, authorization or approval,'' since Virginia must ''enforce federally authorized environmental programs in a manner that is no less stringent than their federal counterparts. * * *'' The opinion concludes that ''[r]egarding section 10.1–1198, therefore, documents or other information needed for civil or criminal enforcement under one of these programs could not be privileged because such documents and information are essential to pursuing enforcement in a manner required by federal law to maintain program delegation, authorization or approval.''

Virginia's Immunity law, Va. Code Sec. 10.1–1199, provides that ''[t]o the extent consistent with requirements imposed by Federal law,'' any person making a voluntary disclosure of information to a state agency regarding a violation of an environmental statute, regulation, permit, or administrative order is granted immunity from administrative or civil penalty. The Attorney General's January 12, 1997 opinion states that the quoted language renders this statute inapplicable to enforcement of any federally authorized programs, since ''no immunity could be afforded from administrative, civil, or criminal penalties because granting such immunity would not be consistent with federal law, which is one of the criteria for immunity.'' Therefore, EPA has determined that Virginia's Privilege and Immunity statutes will not preclude the Commonwealth from enforcing its program consistent with the federal requirements. In any event, because EPA has also determined that a state audit privilege and immunity law can affect only state enforcement and cannot have any impact on federal enforcement authorities, EPA may at any time invoke its authority under the Clean Air Act, including, for example, sections 113, 167, 205, 211 or 213, to enforce the requirements or prohibitions of the state plan, independently of any state enforcement effort. In addition, citizen enforcement under section 304 of the Clean Air Act is likewise unaffected by this, or any, state audit privilege or immunity law.

II. Proposed Action

EPA is proposing approval of the Post-1996 plan submitted by the State of Maryland for the Metropolitan Washington, D.C. ozone nonattainment area. EPA is proposing to approve into the Maryland SIP eleven (11) TCMs creditable to the post-1996 ROP and attainment demonstration.

III. Proposed Action

EPA is proposing approval of the Post-1996 plan submitted by the Commonwealth of Virginia for the Virginia portion of the Metropolitan Washington, D.C. ozone nonattainment area. EPA is proposing to approve into the Virginia SIP ten (10) TCMs creditable to the post-1996 ROP and attainment demonstration.

Written comments must be received on or before November 9, 2000. EPA calls your attention to the November 9, 2000 deadline date for submittal of comments on this proposed action to approve these SIP revisions submitted by the Commonwealth of Virginia and the State of Maryland. The EPA is providing a shortened time period for comment for two reasons. As an initial matter, these revisions are non-controversial and EPA does not expect comment because all of the creditable reductions were calculated in accordance with EPA guidance from Federal measures or SIP-approved measures. Moreover, these SIP revisions are necessary for full approval of the attainment demonstration SIP for the Metropolitan Washington, D.C. ozone nonattainment area. The EPA is currently under an obligation to complete rulemaking by November 15, 2000 fully approving the attainment demonstration for the Metropolitan Washington, D.C. ozone nonattainment area or, in the alternative, proposing a Federal implementation plan.

IV. Administrative Requirements

Under Executive Order 12866 (58 FR 51735, October 4, 1993), this proposed action is not a ''significant regulatory action'' and therefore is not subject to review by the Office of Management and Budget. This action merely proposes to approve state law as meeting Federal requirements and imposes no additional requirements beyond those imposed by state law. Accordingly, the Administrator certifies that this proposed rule will not have a significant economic impact on a substantial number of small entities under the Regulatory Flexibility Act (5 U.S.C. 601 *et seq.*). Because this rule proposes to approve pre-existing requirements under state law and does not impose any additional enforceable duty beyond that required by state law, it does not contain any unfunded mandate or significantly or uniquely affect small governments, as described in the Unfunded Mandates Reform Act of 1995 (Public Law 104–4). For the same reason, this proposed rule also does not significantly or uniquely affect the communities of tribal governments, as

specified by Executive Order 13084 (63 FR 27655, May 10, 1998). This proposed rule will not have substantial direct effects on the States, on the relationship between the national government and the States, or on the distribution of power and responsibilities among the various levels of government, as specified in Executive Order 13132 (64 FR 43255, August 10, 1999), because it merely proposes to approve a state rule implementing a Federal standard, and does not alter the relationship or the distribution of power and responsibilities established in the Clean Air Act. This proposed rule also is not subject to Executive Order 13045 (62 FR 19885, April 23, 1997), because it is not economically significant.

In reviewing SIP submissions, EPA's role is to approve state choices, provided that they meet the criteria of the Clean Air Act. In this context, in the absence of a prior existing requirement for the State to use voluntary consensus standards (VCS), EPA has no authority to disapprove a SIP submission for failure to use VCS. It would thus be inconsistent with applicable law for EPA, when it reviews a SIP submission, to use VCS in place of a SIP submission that otherwise satisfies the provisions of the Clean Air Act. Thus, the requirements of section 12(d) of the National Technology Transfer and Advancement Act of 1995 (15 U.S.C. 272 note) do not apply. As required by section 3 of Executive Order 12988 (61 FR 4729, February 7, 1996), in issuing this proposed rule, EPA has taken the necessary steps to eliminate drafting errors and ambiguity, minimize potential litigation, and provide a clear legal standard for affected conduct. EPA has complied with Executive Order 12630 (53 FR 8859, March 15, 1988) by examining the takings implications of the rule in accordance with the ''Attorney General's Supplemental Guidelines for the Evaluation of Risk and Avoidance of Unanticipated Takings'' issued under the executive order. This proposed rule regarding Maryland's and Virginia's Post-1996 plan for the Washington area does not impose an information collection burden under the provisions of the Paperwork Reduction Act of 1995 (44 U.S.C. 3501 *et seq.*).

List of Subjects in 40 CFR Part 52

Environmental protection, Air pollution control, Hydrocarbons, Intergovernmental relations, Nitrogen dioxide, Ozone, Reporting and recordkeeping requirements.

Authority: 42 U.S.C. 7401 *et seq.*

Dated: October 13, 2000.

Thomas Voltaggio,

Acting Regional Administrator, Region III.

[FR Doc. 00–26907 Filed 10–18–00; 8:45 am]

BILLING CODE 6560–50–P

ENVIRONMENTAL PROTECTION AGENCY

40 CFR Part 52

[VA122 & 123–5054; FRL–6888–4]

Approval and Promulgation of Air Quality Implementation Plans; Virginia; Source-Specific Permits To Reduce NO_X Emissions in the Metropolitan Washington, D.C. Ozone Nonattainment Area

AGENCY: Environmental Protection Agency (EPA).

ACTION: Proposed rule.

SUMMARY: EPA is proposing to approve two permits issued by the Commonwealth of Virginia for the Potomac Electric Power Company (PEPCO), Potomac River Generating Station and the Virginia Power (VP), Possum Point Generating Station. These permits were submitted as State Implementation Plan (SIP) revisions on September 19, 2000 and September 26, 2000, respectively, by the Virginia Department of Environmental Quality (VADEQ). These permits impose conditions which reduce nitrogen oxides (NO_X) emissions from these two facilities during the ozone season (May 1–September 30) of each year. The intent of this action is to propose approval of these permits as SIP revisions because the resulting NO_X emission reductions are strengthening measures for the Metropolitan Washington, D.C. ozone nonattainment area's attainment plan and are necessary for full approval of the attainment demonstration SIP for the Metropolitan Washington, D.C. ozone nonattainment area.

DATES: Written comments must be received on or before November 9, 2000.

ADDRESSES: Comments may be mailed to Makeba A. Morris, Chief, Technical Assessment Branch, Mailcode 3AP11, Environmental Protection Agency, Region III, 1650 Arch Street, Philadelphia, Pennsylvania 19103. Copies of the documents relevant to this action are available for public inspection during normal business hours at the following locations: Air Protection Division, Environmental Protection Agency, Region III, 1650 Arch Street, Philadelphia, Pennsylvania 19103–2029; Virginia Department of Environmental Quality, 629 East Main Street, Richmond, Virginia 23219.

FOR FURTHER INFORMATION CONTACT: Michael Ioff at (215) 814–2166.

SUPPLEMENTARY INFORMATION:

Table of Contents

I. What is EPA proposing to approve?
II. What pollutant will these SIP revisions control?
III. What are the limits for these sources?
IV. What are the environmental effects of this action?
V. General information pertaining to Submittals for the Commonwealth
VII. Proposed Action.
VIII. Administrative Requirements.

I . What Is EPA Proposing To Approve?

EPA is proposing to approve two permits issued by the Commonwealth of Virginia for the Potomac Electric Power Company's (PEPCO) Potomac River Generating Station in Alexandria and for the Virginia Power (VP), Possum Point Generating Station in Dumfries, submitted as SIP revisions on September 19, 2000 and September 26, 2000, respectively. These permits impose conditions which reduce nitrogen oxides (NO_X) emissions during the ozone season of each year (May 1–September 30). This action will have a beneficial effect on air quality by reducing NO_X emissions in Metropolitan Washington, D.C. ozone nonattainment area. It is being taken under Section 110 of the Clean Air Act (CAA).

II. What Pollutant Will These SIP Revisions Control?

The proposed permits require the Potomac River Station and the Possum Point Station to reduce their NO_X emissions during the ozone season. Nitrogen oxides, or NO_X, is the generic term for a group of gases formed in a combustion process. The primary sources of NO_X emissions are motor vehicles, electric utilities and, to a lesser degree, industrial, commercial and residential sources that burn fossil fuel. NO_X is one of the main ingredients responsible for formation of ground-level ozone (smog).

III. What Are the Limits for These Sources?

The permit for the Potomac River Generating Station establishes a limit (cap) on emission of nitrogen oxides to no more than 1019 tons during each ozone season (May 1 through September 30). This emission cap is based on an average emission rate of 0.15 pound per million BTU of heat input for each individual unit during the ozone season. Compliance shall be demonstrated by continuous emission monitoring from

each unit, beginning no later than year 2003. The permit for the Possum Point Generating Station limits emission of nitrogen oxides from the combined emission units to no more than 0.15 pound per million BTU of heat input averaged over every period of 30 consecutive operating days during the ozone season. Compliance shall be demonstrated by calculations based upon a specific formula with the input to be derived from the collection of continuous emission monitoring data, beginning the 30th operating day in January of year 2003.

IV. What Are the Environmental Effects of This Action?

Both electric utilities are currently operating their emission units in compliance with VADEQ issued permits imposing Reasonably Available Control Technology (RACT) and ''Acid Rain'' permits issued pursuant to Title IV of the CAA. The NO_X reduction requirements in the permits described in section III, above, are more stringent than those imposed in the RACT and Acid Rain permits. Therefore, the permits submitted by VADEQ on September 19, 2000 and September 26, 2000, will result in additional reductions of NO_X emissions during the ozone season.

V. General Information Pertaining to Submittals From the Commonwealth

In 1995, Virginia adopted legislation that provides, subject to certain conditions, for an environmental assessment (audit) ''privilege'' for voluntary compliance evaluations performed by a regulated entity. The legislation further addresses the relative burden of proof for parties either asserting the privilege or seeking disclosure of documents for which the privilege is claimed. Virginia's legislation also provides, subject to certain conditions, for a penalty waiver for violations of environmental laws when a regulated entity discovers such violations pursuant to a voluntary compliance evaluation and voluntarily discloses such violations to the Commonwealth and takes prompt and appropriate measures to remedy the violations. Virginia's Voluntary Environmental Assessment Privilege Law, Va. Code Sec. 10.1–1198, provides a privilege that protects from disclosure documents and information about the content of those documents that are the product of a voluntary environmental assessment. The Privilege Law does not extend to documents or information (1) that are generated or developed before the commencement of a voluntary environmental assessment; (2) that are prepared independently of the assessment process; (3) that demonstrate a clear, imminent and substantial danger to the public health or environment; or (4) that are required by law.

On January 12, 1997, the Commonwealth of Virginia Office of the Attorney General provided a legal opinion that states that the Privilege law, Va. Code Sec. 10.1–1198, precludes granting a privilege to documents and information ''required by law,'' including documents and information ''required by federal law to maintain program delegation, authorization or approval,'' since Virginia must ''enforce federally authorized environmental programs in a manner that is no less stringent than their federal counterparts. * * *'' The opinion concludes that ''[r]egarding section 10.1–1198, therefore, documents or other information needed for civil or criminal enforcement under one of these programs could not be privileged because such documents and information are essential to pursuing enforcement in a manner required by federal law to maintain program delegation, authorization or approval.''

Virginia's Immunity law, Va. Code Sec. 10.1–1199, provides that ''[t]o the extent consistent with requirements imposed by Federal law,'' any person making a voluntary disclosure of information to a state agency regarding a violation of an environmental statute, regulation, permit, or administrative order is granted immunity from administrative or civil penalty. The Attorney General's January 12, 1997 opinion states that the quoted language renders this statute inapplicable to enforcement of any federally authorized programs, since ''no immunity could be afforded from administrative, civil, or criminal penalties because granting such immunity would not be consistent with federal law, which is one of the criteria for immunity.''

Therefore, EPA has determined that Virginia's Privilege and Immunity statutes will not preclude the Commonwealth from enforcing its program consistent with the federal requirements. In any event, because EPA has also determined that a state audit privilege and immunity law can affect only state enforcement and cannot have any impact on federal enforcement authorities, EPA may at any time invoke its authority under the Clean Air Act, including, for example, sections 113, 167, 205, 211 or 213, to enforce the requirements or prohibitions of the state plan, independently of any state enforcement effort. In addition, citizen enforcement under section 304 of the Clean Air Act is likewise unaffected by this, or any, state audit privilege or immunity law.

EPA's review of this material indicates that proposed permits will have a beneficial effect on air quality by reducing NO_X emissions in Metropolitan Washington, D.C. ozone nonattainment area. EPA is proposing to approve the permits for Potomac River Generating Station and Possum Point Generating Station, as SIP revisions.

VIII. Proposed Action

EPA is proposing to approve two permits issued by the Commonwealth of Virginia to control NO_X emissions from the Potomac Electric Power Company's (PEPCO) Potomac River Generating Station and the Virginia Power's (VP) Possum Point Generating Station as revisions to Virginia's SIP. EPA is proposing approval of these permits as SIP revisions because the resulting NO_X emission reductions are strengthening measures for the Metropolitan Washington, D.C. ozone nonattainment area's attainment plan SIP and are necessary for full approval of that attainment demonstration. Written comments must be received on or before November 9, 2000. EPA calls your attention to the November 9, 2000 deadline date for submittal of comments on this proposed action to approve these SIP revisions submitted by the Commonwealth of Virginia. The EPA is providing a shortened time period for comment for two reasons. As an initial matter, these revisions are non-controversial and EPA does not expect comment because these are source-specific SIP revisions consisting of permits affecting only the two named facilities. Moreover, these SIP revisions are necessary for full approval of the attainment demonstration SIP for the Metropolitan Washington, D.C. ozone nonattainment area. The EPA is currently under an obligation to complete rulemaking by November 15, 2000 fully approving the attainment demonstration for the Metropolitan Washington, D.C. ozone nonattainment area or, in the alternative, proposing a federal implementation plan.

VIII. Administrative Requirements

Under Executive Order 12866 (58 FR 51735, October 4, 1993), this proposed action is not a ''significant regulatory action'' and therefore is not subject to review by the Office of Management and Budget. This proposed action merely proposes to approve state law as meeting Federal requirements and imposes no additional requirements beyond those imposed by state law. Accordingly, the Administrator certifies

that this proposed rule will not have a significant economic impact on a substantial number of small entities under the Regulatory Flexibility Act (5 U.S.C. 601 *et seq.*). Because this rule proposes to approve pre-existing requirements under state law and does not impose any additional enforceable duty beyond that required by state law, it does not contain any unfunded mandate or significantly or uniquely affect small governments, as described in the Unfunded Mandates Reform Act of 1995 (Public Law 104–4). For the same reason, this proposed rule also does not significantly or uniquely affect the communities of tribal governments, as specified by Executive Order 13084 (63 FR 27655, May 10, 1998). This proposed rule will not have substantial direct effects on the States, on the relationship between the national government and the States, or on the distribution of power and responsibilities among the various levels of government, as specified in Executive Order 13132 (64 FR 43255, August 10, 1999), because it merely proposes to approve a state rule implementing a federal standard, and does not alter the relationship or the distribution of power and responsibilities established in the Clean Air Act. This proposed rule also is not subject to Executive Order 13045 (62 FR 19885, April 23, 1997), because it is not economically significant. In reviewing SIP submissions, EPA's role is to approve state choices, provided that they meet the criteria of the Clean Air Act. In this context, in the absence of a prior existing requirement for the State to use voluntary consensus standards (VCS), EPA has no authority to disapprove a SIP submission for failure to use VCS. It would thus be inconsistent with applicable law for EPA, when it reviews a SIP submission, to use VCS in place of a SIP submission that otherwise satisfies the provisions of the Clean Air Act. Thus, the requirements of section 12(d) of the National Technology Transfer and Advancement Act of 1995 (15 U.S.C. 272 note) do not apply. As required by section 3 of Executive Order 12988 (61 FR 4729, February 7, 1996), in issuing this proposed rule, EPA has taken the necessary steps to eliminate drafting errors and ambiguity, minimize potential litigation, and provide a clear legal standard for affected conduct. EPA has complied with Executive Order 12630 (53 FR 8859, March 15, 1988) by examining the takings implications of the rule in accordance with the ''Attorney General's Supplemental Guidelines for the Evaluation of Risk and Avoidance of Unanticipated Takings'' issued under the executive order. This proposed rule to approve permits issued by the Commonwealth of Virginia to control NO_X emissions from the Potomac River Generating Station and the Possum Point Generating Station does not impose an information collection burden under the provisions of the Paperwork Reduction Act of 1995 (44 U.S.C. 3501 *et seq.*).

List of Subjects in 40 CFR Part 52

Environmental protection, Air pollution control, Intergovernmental relations, Nitrogen dioxide, Ozone, Reporting and recordkeeping requirements.

Authority: 42 U.S.C. 7401 *et seq.*

Dated: October 13, 2000.

Thomas Voltaggio,

Acting Regional Administrator, Region III.

[FR Doc. 00–26906 Filed 10–18–00; 8:45 am]

BILLING CODE 6560–50–P

ENVIRONMENTAL PROTECTION AGENCY

40 CFR Part 52

[MD106–3058; FRL–6888–3]

Approval and Promulgation of Air Quality Implementation Plans; Maryland; Reasonably Available Control Technology for Oxides of Nitrogen

AGENCY: Environmental Protection Agency (EPA).

ACTION: Proposed rule.

SUMMARY: EPA is proposing to approve a State Implementation Plan (SIP) revision submitted by the State of Maryland. This revision requires major sources of nitrogen oxides (NO_X) in the State of Maryland to implement reasonably available control technology (RACT). This action is being taken in accordance with the Clean Air Act.

DATES: Written comments must be received on or before November 9, 2000.

ADDRESSES: Written comments should be mailed to David L. Arnold, Chief, Ozone and Mobile Sources Branch, Mailcode 3AP21, U.S. Environmental Protection Agency, Region III, 1650 Arch Street, Philadelphia, Pennsylvania 19103. Copies of the documents relevant to this action are available for public inspection during normal business hours at the Air Protection Division, U.S. Environmental Protection Agency, Region III, 1650 Arch Street, Philadelphia, Pennsylvania 19103 and the Maryland Department of the Environment, 2500 Broening Highway, Baltimore, Maryland 21224.

FOR FURTHER INFORMATION CONTACT: Kelly L. Bunker, (215) 814–2177 or by e-mail at bunker.kelly@epamail.epa.gov.

SUPPLEMENTARY INFORMATION:

I. Background

Pursuant to sections 182(b)(2) and 182(f) of the Clean Air Act (CAA), Maryland is required to implement RACT for all major NO_X sources by no later than May 31, 1995. The definition of a major source is determined by its size, location, the classification of that area and whether it is located in the ozone transport region (OTR), which is established by the CAA. The entire State of Maryland is included in the OTR. The Baltimore nonattainment area and Cecil County are classified as severe nonattainment areas. Calvert, Charles, Frederick, Montgomery and Prince George's Counties are classified as serious ozone nonattainment areas. The remaining counties in Maryland are classified as marginal or in attainment. However, under section 184 of the CAA, at a minimum, moderate area requirements for stationary sources, including RACT as specified in sections 182(b)(2) and 182(f), apply throughout the OTR. Therefore, RACT is applicable statewide in Maryland. Section 182 of the Act defines a major NO_X source as one that emits or has the potential to emit 25 or more tons of NO_X per year (TPY) in any ozone nonattainment area classified as severe, or 50 or more TPY located in any ozone nonattainment area classified as serious. For any area in the OTR classified as attainment or marginal nonattainment, sections 182 and 184 of the Act define a major stationary source of NO_X as one that emits or has the potential to emit 100 or more TPY.

On July 11, 1995, the Maryland Department of the Environment (MDE) submitted a revision to its State Implementation Plan (SIP) for the control of NO_X emissions from major sources. This submittal included revisions to regulation COMAR 26.11.09.01 and 26.11.09.08 which pertained to definitions and a ''generic'' NO_X RACT rule. This generic rule required affected sources to either meet a presumptive NO_X emissions standard or to submit a ''case-by-case'' RACT proposal for approval by MDE. Each case-by-case RACT determination was required to be the subject of a public hearing and to be submitted to the EPA as a SIP revision. On June 22, 1999 EPA granted conditional limited approval of this SIP revision (64 FR 33197). On September 8, 2000, Maryland submitted

a SIP revision which repealed the ''generic'' RACT rule found at COMAR 26.11.09.08 and instead adopted source category specific RACT emission limitations at COMAR 26.11.09.08. The submittal of the September 8, 2000, SIP revision fulfills the conditions of the conditional limited approval.

The September 8, 2000, SIP revision is the subject of this action. The September 8, 2000, submittal included the new regulation, COMAR 26.11.09.08, which requires major NO_X sources in the entire State of Maryland to comply with RACT requirements by May 31, 1995, and the addition of the definition for the term ''high heat release unit'' to COMAR 26.11.09.01.

II. Summary of Maryland's SIP Revision

COMAR 26.11.09.01—Definitions

COMAR 26.11.09.01, ''Definitions,'' has been revised to add the term ''high heat release unit'' which is used in Chapter 09, ''Control of Fuel-Burning Equipment, Stationary Internal Combustion Engines, and Certain Fuel-Burning Installations.''

COMAR 26.11.09.08—Control of NO_X Emissions From Major Stationary Sources

COMAR 26.11.09.08.A—Applicability

Section A establishes the applicability of this regulation to owners or operators of an installation that is located at a premises that has a total potential to emit: 25 or more TPY in Baltimore City, Anne Arundel, Baltimore, Carroll, Harford, Howard Counties (the Baltimore severe nonattainment area) and Cecil County (part of the Philadelphia-Wilmington-Trenton severe nonattainment area), 50 or more TPY in Calvert, Charles, Frederick, Montgomery, and Prince George's Counties (the Maryland portion of the Washington, DC serious nonattainment area), or 100 or more TPY in Allegany, Caroline, Dorchester, Garrett, Kent, Queen Anne's, St. Mary's, Somerset, Talbot, Washington, Wicomico, or Worcester Counties.

COMAR 26.11.09.08.B—General Requirements and Conditions

Section B sets general RACT emission standards for any major stationary source that causes NO_X emissions and is subject to this regulation. These general emission standards are found in Table 1. Sections C through J of COMAR 26.11.09.08 set source category specific RACT limitations.

TABLE 1.—EMISSION STANDARDS IN POUNDS OF NO_X PER MILLION BRITISH THERMAL UNITS (MMBTU) PER HOUR OF HEAT INPUT

Fuel	Tangential-fired	Wall-fired
Gas Only	0.20	0.20
Gas/Oil	0.25	0.25
Coal (dry bottom)	0.38	0.38
Coal (wet bottom)	1.00	1.00

The regulation requires demonstration of compliance by either continuous emission monitoring (CEMs) or stack tests. Compliance via CEM shall be determined on a 30-day rolling average. Stack test compliance shall be determined as averages of the stack test duration.

EPA is proposing to approve the above emission limits as RACT for those major stationary sources not subject to emission standards under any other section of this regulation. EPA policy for NO_X RACT for four categories of utility boilers (wall- and tangential-fired—gas/oil, coal dry bottom), was set in the ''NO_X Supplement to the General Preamble for Implementation of Title I'' (''NO_X Supplement'') (57 FR 55620, November 25, 1992). Emission limits for other source categories are considered NO_X RACT if comparable to RACT for these certain utility boilers. Comparability is based upon emission reduction, cost and cost-effectiveness. EPA has determined that the limits set in Maryland's regulation, for these same four categories of utility boilers as in the NO_X Supplement, meet the requirement for RACT. A source may propose an alternative standard if the source meets specific requirements which include: (1) The uncontrolled NO_X emissions for the installation established with a CEM or stack tests obtained during steady state operation, (2) stack tests or other data from an existing similar installation demonstrating that the applicable standard cannot be met, (3) identification of all proposed combustion, fuel or process modifications to meet the alternative standard and (4) equipment vendor costs from other facilities and other information that demonstrates that complying with the emission standards in the regulation is unreasonable as compared to the cost of meeting an alternative standard. The alternative standard must be approved by both the MDE and EPA.

The regulation allows for emissions averaging for a person who owns or operates more than one installation. The emissions averaging provision provides for compliance by meeting an overall source or system-wide NO_X emission reduction that is equivalent to or greater than the NO_X emission reduction that would be achieved if each individual installation complied with the applicable requirements. The sources must have CEMs to be included in the emission averaging and must be able to demonstrate that on each day of operation the total plant or system-wide NO_X emissions are equal to or less than the NO_X emissions that would be emitted if each installation was meeting the applicable emission standard. The emissions averaging must be approved by both MDE and EPA before it is considered an acceptable compliance method.

EPA is proposing to approve both the alternative standards and emissions averaging provisions of this regulation.

EPA is proposing to approve the requirements in sections 26.11.09.08.C–J as RACT for those categories of sources.

COMAR 26.11.09.08.C—Requirements for Fuel-Burning Equipment With a Rated Heat Input Capacity of 250 MMBtu per Hour or Greater

Section C establishes that the owner or operator of fuel-burning equipment with a rated heat input capacity of 250 MMBtu per hour or greater equip each installation with combustion modifications or other technologies to meet the following NO_X emission rates (in pounds of NO_X per MMBtu per hour): 0.45 for tangentially coal fired units located at an electric generating facility (excluding high heat release units); 0.50 for wall coal fired units located at an electric generating facility (excluding high heat release units); 0.30 for oil fired or gas/oil fired units located at an electric generating facility; 0.70 for coal fired cyclone fuel burning equipment located at an electric generating facility from May 1 through September 30 and 1.5 during the period October 1 through April 30; 0.70 for a tangentially coal fired high heat release unit located at an electric generating facility; 0.80 for a wall coal fired high heat release unit located at an electric generating facility; 0.60 for coal fired cell burners at an electric generating facility; and 0.70 for fuel burning equipment stacks at an electric generating facility during the period of May 1 through September 30 of each year and 0.99 during the period of October 1 through April 30 of each year. Compliance must be demonstrated by operation and maintenance of a certified NO_X CEM or an alternative monitoring method approved by both MDE and EPA.

COMAR 26.11.09.08.D—Requirements for Fuel-Burning Equipment With a Rated Heat Input Capacity of Less Than 250 MMBtu per Hour and Greater Than 100 MMBtu per Hour

Section D establishes that the owner or operator of coal burning equipment with a rated heat input capacity of less than 250 MMBtu per hour and greater than 100 MMBtu per hour shall install and operate, in accordance with manufacturer's specifications, combustion modifications or other technologies to meet an emission rate of 0.50 pounds of NO_X per MMBtu per hour. All other fuel burning equipment with a rated heat input capacity of less than 250 MMBtu per hour and greater than 100 MMBtu per hour shall meet the NO_X emission rate found in COMAR 26.11.09.08B.

COMAR 26.11.09.08.E—Requirements for Fuel Burning Equipment With a Rated Heat Input Capacity of 100 MMBtu/hr or Less

Section E establishes that the owner or operator of fuel burning equipment with rated heat input capacity less than 100 MMBtu per hour must have submitted to MDE a list of each affected installation, the rated heat capacity of each installation, and the fuel used. The owner or operator must complete a combustion analysis at least once each calendar year and operate the equipment at the optimum combustion level based on this analysis. Analysis and test results must be maintained for at least 2 years and be available to MDE and EPA upon request. Operators are also required to attend operator training on combustion optimization sponsored by MDE, EPA or equipment vendors at least once every 3 years, and records of training program attendance must be maintained and available for review. Based on data from the Gas Research Institute, the NO_X Implementation Workgroup, and the Council of Industrial Boiler Owners, MDE concluded that this section is acceptable as RACT for fuel burning equipment with a heat capacity of 100 MMBtu/hr or less.

COMAR 26.11.09.08.F—Requirements for Space Heaters

Section F establishes that an owner or operator of a space heater must submit to MDE a list of the affected installations at each premises and the types of fuel used. The owner or operator also must develop an operating and maintenance plan to minimize NO_X emissions, based on equipment vendors recommendations and subject to review by MDE. Operators are required to attend in-state training programs on NO_X reductions at least once every three years, and the owner must maintain a record of training attendance for each operator. These records should be made available to MDE upon request. EPA interprets ''an operation and maintenance plan to minimize NO_X emissions based on recommendations from equipment vendors,'' as stated in section F(b), to mean only technically supportable operation and maintenance requirements that result in the equipment being operated, maintained and repaired in a manner that achieves the minimization of NO_X emissions.

COMAR 26.11.09.08.G—Requirements for Fuel-Burning Equipment With a Capacity Factor of 15 Percent or Less, and Combustion Turbines With a Capacity Factor Greater Than 15 Percent

Sources must certify that they meet the capacity factors of this section. Section G requires the performance of an annual combustion analysis and operation of the equipment at the optimum combustion level based on this analysis for fuel-burning equipment operating over 500 hours during a calendar year. The capacity factor must be certified. Operators are also required to attend operator training on combustion optimization sponsored by MDE, EPA or equipment vendors at least once every 3 years, and records of training program attendance must be maintained and available for review. The results of the combustion analysis and optimization must be maintained for at least 2 years and made available for review. Combustion turbines with a capacity factor of greater than 15 percent must meet an hourly average NO_X emission rate of not more than 42 ppm when burning gas or 65 ppm when burning fuel oil or meet applicable Prevention of Significant Deterioration (PSD) limits, whichever is more restrictive.

COMAR 26.11.09.08.H—Requirements for Cement Manufacturing Facilities, Municipal Waste Combustors, and Hospital, Medical, and Infectious Waste Incinerators

Section H establishes that the owner or operator of a cement manufacturing facility or a municipal waste combustor shall install and maintain a NO_X CEM. Cement manufacturing kilns may not exceed a total hourly NO_X emission rate, as determined on a 30 day rolling average of the daily average, of 1,000 pounds for a facility with a total kiln capacity of 600,000 tons per year or less and 1,800 pounds for a facility with a total kiln capacity greater than 600,000 tons per year. NO_X emissions from municipal waste combustors may not exceed the NO_X emissions standards in COMAR 26.11.08.08 or applicable PSD limits, whichever is more restrictive.

COMAR 26.11.09.08.I—Requirements for Glass Melting Furnaces and Internal Combustion Engines at Natural Gas Pipeline Stations

Section I establishes that the owner or operator of a glass melting furnace shall optimize combustion by performing daily oxygen tests and maintaining excess oxygen at 4.5 percent or less. Internal combustion engines at a natural gas pipeline station with a capacity factor of over 15 percent shall perform either parametric optimization or engine rebuild to meet the following emission standards: facilities with five or less engines shall meet a combined maximum hourly emission rate of 300 pounds per hour and facilities with more than five engine shall meet a combined maximum hourly emission rate of 566 pounds per hour. The regulation requires that records be kept to document the results of the daily oxygen tests and the performance of the parametric optimization for at least 2 years.

COMAR 26.11.09.08.J—Requirements for Industrial Furnaces and Other Miscellaneous Installations That Cause Emissions of NO_X

Section J establishes that the owner or operator of any installation, other than fuel burning equipment, that emits NO_X emissions shall: Maintain good operating practices as recommended by the equipment vendor to minimize NO_X emissions; prepare and implement a written in-house training program for all operators of these installations that includes good operating and maintenance practices; maintain a copy of the written training program for review, maintain attendance records for each operator for at least 2 years; and burn only gas in each installation, where gas is available, during the period of May 1 through September 30.

COMAR 26.11.09.08.K—Reporting Requirements

Sources are required to submit CEM data and stack test results to the MDE within acceptable time limits. Compliance with RACT requirements should be based on CEM data certified in accordance with 40 CFR part 60, appendix B or part 75, appendix A. If the installation is stack tested, Method 7 found in COMAR 26.11.01.04C(1) must be used, and the results must be submitted to MDE within 45 days after test completion. The regulation also requires that annual fuel use records be

maintained for 3 years and made available for review by the State. The reporting requirements are approvable.

III. Proposed Action

EPA is proposing full approval of Maryland's NO_X RACT regulation found at COMAR 26.11.09.01 and 26.11.09.08 which was submitted as a SIP revision by the Maryland Department of the Environment on September 8, 2000.

Interested parties may participate in the Federal rulemaking procedure by submitting written comments to the EPA Regional office listed in the **ADDRESSES** section of this document. Written comments must be received on or before November 9, 2000. EPA calls your attention to the November 9, 2000 deadline date for submittal of comments on this proposed action to grant full approval of this SIP revision submitted by the State of Maryland. The EPA is providing a shortened time period for comment for two reasons. As an initial matter, this revision is non-controversial and EPA does not expect comment. Maryland's NO_X RACT requirements are consistent with the RACT requirements adopted by other states and do provide provisions for sources to apply for an alternative RACT determination. Moreover, this SIP revision is necessary for full approval of the attainment demonstration SIP for the Metropolitan Washington, D.C. ozone nonattainment area. The EPA is currently under an obligation to complete rulemaking by November 15, 2000 fully approving the attainment demonstration for the Metropolitan Washington, D.C. ozone nonattainment area or, in the alternative, proposing a federal implementation plan.

IV. Administrative Requirements

Under Executive Order 12866 (58 FR 51735, October 4, 1993), this proposed action is not a ''significant regulatory action'' and therefore is not subject to review by the Office of Management and Budget. This action merely proposes to approve state law as meeting Federal requirements and imposes no additional requirements beyond those imposed by state law. Accordingly, the Administrator certifies that this rule will not have a significant economic impact on a substantial number of small entities under the Regulatory Flexibility Act (5 U.S.C. 601 *et seq.*). Because this rule approves pre-existing requirements under state law and does not impose any additional enforceable duty beyond that required by state law, it does not contain any unfunded mandate or significantly or uniquely affect small governments, as described in the Unfunded Mandates Reform Act of 1995 (Public Law 104–4). For the same reason, this proposed rule also does not significantly or uniquely affect the communities of tribal governments, as specified by Executive Order 13084 (63 FR 27655, May 10, 1998). This proposed rule will not have substantial direct effects on the States, on the relationship between the national government and the States, or on the distribution of power and responsibilities among the various levels of government, as specified in Executive Order 13132 (64 FR 43255, August 10, 1999), because it merely proposes to approve a state rule implementing a federal standard, and does not alter the relationship or the distribution of power and responsibilities established in the Clean Air Act. This rule also is not subject to Executive Order 13045 (62 FR 19885, April 23, 1997), because it is not economically significant.

In reviewing SIP submissions, EPA's role is to approve state choices, provided that they meet the criteria of the Clean Air Act. In this context, in the absence of a prior existing requirement for the State to use voluntary consensus standards (VCS), EPA has no authority to disapprove a SIP submission for failure to use VCS. It would thus be inconsistent with applicable law for EPA, when it reviews a SIP submission, to use VCS in place of a SIP submission that otherwise satisfies the provisions of the Clean Air Act. Thus, the requirements of section 12(d) of the National Technology Transfer and Advancement Act of 1995 (15 U.S.C. 272 note) do not apply. As required by section 3 of Executive Order 12988 (61 FR 4729, February 7, 1996), in issuing this rule, EPA has taken the necessary steps to eliminate drafting errors and ambiguity, minimize potential litigation, and provide a clear legal standard for affected conduct. EPA has complied with Executive Order 12630 (53 FR 8859, March 15, 1988) by examining the takings implications of the rule in accordance with the ''Attorney General's Supplemental Guidelines for the Evaluation of Risk and Avoidance of Unanticipated Takings'' issued under the executive order. This rule, which proposes approval of Maryland's NO_X RACT regulation, does not impose an information collection burden under the provisions of the Paperwork Reduction Act of 1995 (44 U.S.C. 3501 *et seq.*).

List of Subjects in 40 CFR Part 52

Environmental protection, Air pollution control, Intergovernmental relations, Nitrogen dioxide, Reporting and recordkeeping requirements.

Dated: October 13, 2000.

Thomas Voltaggio,

Acting Regional Administrator, Region III.

[FR Doc. 00–26905 Filed 10–18–00; 8:45 am]

BILLING CODE 6560–50–P

ENVIRONMENTAL PROTECTION AGENCY

40 CFR Part 52

[MD104–3057; FRL–6888–2]

Approval and Promulgation of Air Quality Implementation Plans; Maryland; Nitrogen Oxides Reduction and Trading Program

AGENCY: Environmental Protection Agency (EPA).

ACTION: Proposed rule.

SUMMARY: EPA is proposing to approve a State Implementation Plan (SIP) revision submitted by the State of Maryland on April 27, 2000. This revision responds to the EPA's regulation entitled, ''Finding of Significant Contribution and Rulemaking for Certain States in the Ozone Transport Assessment Group Region for Purposes of Reducing Regional Transport of Ozone,'' otherwise known as the '' NO_X SIP Call.'' This revision establishes and requires a nitrogen oxides (NO_X) allowance trading program for large electric generating and industrial units, and reductions for cement kilns and stationary industrial combustion engines, beginning in 2003. The intended effect of this action has two purposes. EPA is proposing to approve the Maryland's NO_X Reduction and Trading Program because it meets the requirements of the NO_X SIP Call that will significantly reduce ozone transport in the eastern United States. In addition, EPA is proposing to approve the Maryland's NO_X Reduction and Trading Program because it supports the one-hour attainment demonstration plans for the Baltimore, Metropolitan Washington, D.C. and Philadelphia-Wilmington-Trenton ozone nonattainment areas.

DATES: Written comments must be received on or before November 9, 2000.

ADDRESSES: Written comments may be mailed to David L. Arnold, Chief, Ozone & Mobile Sources Branch, Mailcode 3AP21, U.S. Environmental Protection Agency, Region III, 1650 Arch Street, Philadelphia, Pennsylvania 19103. Copies of the documents relevant to this action are available for public inspection during normal business hours at the Air Protection Division,

U.S. Environmental Protection Agency, Region III, 1650 Arch Street, Philadelphia, Pennsylvania 19103 and Maryland Department of the Environment, 2500 Broening Highway, Baltimore, Maryland 21224.

FOR FURTHER INFORMATION CONTACT: Cristina Fernandez, (215) 814–2178, or by e-mail at fernandez.cristina@epa.gov.

SUPPLEMENTARY INFORMATION: On April 27, 2000, the Maryland Department of the Environment (MDE) submitted a revision to its SIP to meet the requirements of the NO_X SIP Call. The revision consists of the adoption of two new chapters COMAR 26.111.29 NO_X Reduction and Trading Program and COMAR 26.11.30 Polices and Procedure Relating to Maryland's NO_X Reduction and Trading Program.

The information in this section is organized as follows:

I. EPA's Action

A. What action is EPA proposing today?
B. Why is EPA proposing this action?
C. What are the general NO_X SIP Call requirements?
D. What is EPA's NO_X budget and allowance trading program?
E. What guidance did EPA use to evaluate Maryland's submittal?

II. Maryland's NO_X Reduction and Trading Program

A. When did Maryland submit the SIP revision to EPA in response to the NO_X SIP Call?
B. What is the Maryland's NO_X Budget Trading Program?
C. What is the result of EPA's evaluation of Maryland's program?

III. Proposed Action

A. NO_X SIP Call Requirements
B. One-Hour Attainment Demonstration Plans

IV. Administrative Requirements

I. EPA's Action

A. What Action Is EPA Proposing Today?

EPA is proposing to approve the Maryland's SIP revision concerning the adoption of its NO_X Reduction and Trading Program, submitted on April 27, 2000.

B. Why Is EPA Proposing This Action?

EPA is proposing this action for two purposes. Maryland's NO_X Reduction and Trading Program regulations meet the requirements of the NO_X SIP Call. In addition, Maryland's NO_X Reduction and Trading Program regulations are part of the one-hour ozone attainment demonstration plans for the serious and severe ozone nonattainment areas of the State of Maryland. The one-hour attainment demonstration plans for the Baltimore, Metropolitan Washington, D.C. and Philadelphia-Wilmington-Trenton ozone nonattainment areas rely on the NO_X reductions associated with the NO_X Reduction and Trading Program in 2003 and beyond. Therefore, EPA is proposing full approval of Maryland's NO_X Reduction and Trading Program for two reasons. First, because it meets the requirements of the NO_X SIP Call, and secondly as a strengthening measure for the one-hour ozone attainment plans for Baltimore, Metropolitan Washington, D.C. and Philadelphia-Wilmington-Trenton ozone nonattainment areas.

C. What Are the General NO_X SIP Call Requirements?

On October 27, 1998, EPA published a final rule entitled, ''Finding of Significant Contribution and Rulemaking for Certain States in the Ozone Transport Assessment Group Region for Purposes of Reducing Regional Transport of Ozone,'' otherwise known as the ''NO_X SIP Call.'' See 63 FR 57356. The NO_X SIP Call requires 22 States and the District of Columbia to meet statewide NO_X emission budgets during the five month period between May 1 and October 1 in order to reduce the amount of ground level ozone that is transported across the eastern United States.

EPA determined state-wide NO_X emission budgets for each affected jurisdiction to be met by the year 2007. EPA identified NO_X emission reductions by source category that could be achieved by using cost-effective measures. The source categories included were electric generating units (EGUs), non-electric generating units (non-EGUs), area sources, nonroad mobile sources and highway sources. However, the NO_X SIP Call allowed states the flexibility to decide which source categories to regulate in order to meet the statewide budgets. In the NO_X SIP Call notice, EPA suggested that imposing statewide NO_X emissions caps on large fossil-fuel fired industrial boilers and electricity generating units would provide a highly cost effective means for States to meet their NO_X budgets. In fact, the state-specific budgets were set assuming an emission rate of 0.15 pounds NO_X per million British thermal units (lb. NO_X/mmBtu) at EGUs, multiplied by the projected heat input (mmBtu) from burning the quantity of fuel needed to meet the 2007 forecast for electricity demand. See 63 FR 57407. The calculation of the 2007 EGU emissions assumed that an emissions trading program would be part of an EGU control program. The NO_X SIP Call state budgets also assumed on average a 30% NO_X reduction from cement kilns, a 60% reduction from industrial boilers and combustion turbines, and a 90% reduction from internal combustion engines. The non-EGU control assumptions were applied at units where the heat input capacities were greater than 250 mmBtu per hour, or in cases where heat input data were not available or appropriate, at units with actual emissions greater than one ton per day.

To assist the states in their efforts to meet the SIP Call, the NO_X SIP Call final rulemaking notice included a model NO_X allowance trading regulation, called ''NO_X Budget Trading Program for State Implementation Plans,'' (40 CFR part 96), that could be used by states to develop their regulations. The NO_X SIP Call notice explained that if states developed an allowance trading regulation consistent with the EPA model rule, they could participate in a regional allowance trading program that would be administered by the EPA. See 63 FR 57458–57459.

There were several periods during which EPA received comments on various aspects of the NO_X SIP Call emissions inventories. On March 2, 2000, EPA published additional technical amendments to the NO_X SIP Call in the **Federal Register** (65 FR 11222). The March 2000 final rulemaking established the inventories upon which Maryland's final budget is based.

On March 3, 2000, the D.C. Circuit issued its decision on the NO_X SIP Call ruling in favor of EPA on all the major issues. *Michigan* v. *EPA,* 213 F.3d 663 (D.C. Cir. 2000). The Court denied petitioners' requests for rehearing or rehearing *en banc* on July 22, 2000. However, the Court ruled against EPA on four narrow issues. The Court remanded certain matters for further rulemaking by EPA. EPA expects to publish a proposal that addresses the remanded portion of the NO_X SIP Call Rule. Any additional emissions reductions required as a result of a final rulemaking on that proposal will be reflected in the second phase portion (Phase II) of the State's emissions budget. Maryland may be required to submit SIP revisions to address any revisions to the NO_X SIP Call Rule.

D. What Is EPA's NO_X Budget and Allowance Trading Program?

EPA's model NO_X budget and allowance trading rule, 40 CFR part 96, sets forth a NO_X emissions trading program for large EGUs and non-EGUs. A state can voluntarily choose to adopt EPA's model rule in order to allow sources within its borders to participate

in regional allowance trading. The October 27, 1998 **Federal Register** notice contains a full description of the EPA's model NO_X budget trading program. See 63 FR 57514—57538 and 40 CFR part 96. In general, air emissions trading uses market forces to reduce the overall cost of compliance for pollution sources, such as power plants, while maintaining emission reductions and environmental benefits. One type of market-based program is an emissions budget and allowance trading program, commonly referred to as a ''cap and trade'' program.

In an emissions budget and allowance trading program, the state or EPA sets a regulatory limit, or emissions budget, in mass emissions from a specific group of sources. The budget limits the total number of allocated allowances during a particular control period. When the budget is set at a level lower than the current emissions, the effect is to reduce the total amount of emissions during the control period. After setting the budget, the state or EPA then assigns, or allocates, allowances to the participating entities up to the level of the budget. Each allowance authorizes the emission of a quantity of pollutant, *e.g.*, one ton of airborne NO_X.

At the end of the control period, each source must demonstrate that its actual emissions during the control period were less than or equal to the number of available allowances it holds. Sources that reduce their emissions below their allocated allowance level may sell their extra allowances. Sources that emit more than the amount of their allocated allowance level may buy allowances from the sources with extra reductions. In this way, the budget is met in the most cost-effective manner.

E. What Guidance Did EPA Use To Evaluate Maryland's Submittal?

The final NO_X SIP Call rule included a model NO_X budget trading program regulation. See 40 CFR part 96. EPA used the model rule and 40 CFR 51.121–51.122 to evaluate Maryland's NO_X Reduction and Trading Program.

II. Maryland's NO_X Reduction and Trading Program

A. When Did Maryland Submit the SIP Revision to EPA in Response to the NO_X SIP Call?

On April 27, 2000, the Maryland Department of the Environment submitted a revision to its SIP to meet the requirements of the NO_X SIP Call.

B. What Is the Maryland's NO_X Reduction and Trading Program?

Maryland's SIP revision to meet the requirements of the NO_X SIP Call consists of the adoption of two new chapters COMAR 26.11.29—NO_X Reduction and Trading Program and COMAR 26.11.30—Polices and Procedure Relating to Maryland's NO_X Reduction and Trading Program. The regulations under COMAR 26.11.29 and COMAR 26.11.30 affect electric generating units, non-electric generating units, cement manufacturing facilities, and large internal combustion engines.

Chapter COMAR 26.11.29—NO_X Reduction and Trading Program is divided into fifteen new regulations: (.01) Definitions; (.02) Incorporation by Reference; (.03) Scope and Applicability; (.04) General Requirements for Affected Trading Sources; (.05) NO_X Allowance Allocations; (.06) Compliance Supplement Pool; (.07) Allowance Banking; (.08) Emission Monitoring; (.09) Requirements for New Sources and Set-Aside Pool; (.10) Reporting; (.11) Record Keeping; (.12) End-of-Season Reconciliation; (.13) Compliance Certification; (.14) Penalties; (.15) Requirements for Affected Nontrading Sources.

The Code of Maryland Regulations (COMAR) 26.11.30—Polices and Procedure Relating to Maryland's NO_X Reduction and Trading Program is divided into nine new regulations: (.01) Scope and Applicability; (.02) Definitions; (.03) Procedures Relating to Compliance Accounts; (.04) Procedures Relating to General Accounts; (.05) Allowance Banking; (.06) Allowance Transfers; (.07) Early Reductions; (.08) Opt-in Procedures; (.09) Allocation of Allowances.

Maryland's NO_X Reduction and Trading Program establishes and requires a NO_X allowance trading program for large electric generating and industrial units, and reductions for cement kilns and stationary industrial combustion engines.

The regulations under COMAR 26.11.29 and COMAR 26.11.30 establish a NO_X cap and allowance trading program for the ozone seasons of 2003 and beyond. The State of Maryland voluntarily chose to follow EPA's model NO_X budget and allowance trading rule, 40 CFR part 96, that sets forth a NO_X emissions trading program for large EGUs and non-EGUs. Because Maryland's NO_X Reduction and Trading Program is based upon EPA's model rule, Maryland sources are allowed to participate in the interstate NO_X allowance trading program that EPA will administer for the participating states. The State of Maryland has adopted regulations that are substantively identical to 40 CFR part 96. Therefore, pursuant to 40 CFR 51.121(p)(1), Maryland's SIP revision is automatically approved as satisfying the same portion of the State's NO_X emission reduction obligations Maryland projects such regulations will satisfy.

Under COMAR 26.11.29 and COMAR 26.11.30, Maryland allocates NO_X allowances to the EGUs and non-EGUs units that are affected by these requirements. The NO_X trading program applies to all fossil fuel fired EGUs with a nameplate capacity greater than 25 MW or more that sell any amount of electricity to the grid as well as any non-EGUs that have a heat input capacity equal to or greater than 250 mmBtu per hour. Each NO_X allowance permits a source to emit one ton of NO_X during the seasonal control period. NO_X allowances may be bought or sold. Unused NO_X allowances may also be banked for future use, with certain limitations. Source owners will monitor their NO_X emissions by using systems that meet the requirements of 40 CFR part 75, subpart H, and report resulting data to EPA electronically. Each budget source complies with the program by demonstrating at the end of each control period that actual emissions do not exceed the amount of allowances held for that period. However, regardless of the number of allowances a source holds, it cannot emit at levels that would violate other federal or state limits, for example, reasonably available control technology (RACT), new source performance standards, or Title IV (the Federal Acid Rain program).

Maryland's NO_X Reduction and Trading Program establishes requirements for cement manufacturing facilities and stationary internal combustion engines. These sources are subject to NO_X reduction requirements but do not participate in the NO_X trading program.

Maryland's submittal does not rely on any additional reductions beyond the anticipated Federal measures in the mobile and area source categories.

Maryland's submittal demonstrates that the NO_X emission budgets established by EPA (65 FR11222) will be met as follows:

Source category	EPA 2007 NO_X budget emissions (tons/season)	Maryland 2007 NO_X budget emissions (tons/season)
EGUs	14,656	14,656
Non-EGUs	12,585	12,513
Area Sources	4,448	4,448
Non-road Sources	20,026	20,026

Source category	EPA 2007 NO_X budget emissions (tons/ season)	Maryland 2007 NO_X budget emissions (tons/ season)
Highway Sources	30,183	30,183
Total	81,898	81,826

C. What Is the Result of EPA's Evaluation of Maryland's Program?

EPA has evaluated Maryland's April 27, 2000 SIP submittal and finds it approvable. The Maryland NO_X Reduction and Trading Program is consistent with EPA's guidance and meets the requirements of the NO_X SIP Call. EPA finds the NO_X control measures in the Maryland's NO_X Reduction and Trading Program approvable. The April 27, 2000 submittal will strengthen Maryland's SIP for reducing ground level ozone by providing NO_X reductions beginning in 2003. Furthermore, Maryland's NO_X Reduction and Trading Program is necessary to fulfill a requirement of the one-hour ozone attainment plans for the serious and severe nonattainment areas of Maryland. The attainment demonstration plans for the Baltimore, Metropolitan Washington, D.C. and Philadelphia-Wilmington-Trenton ozone nonattainment areas rely on the NO_X reductions associated with the NO_X Reduction and Trading Program in 2003 and beyond. EPA finds that Maryland's submittal is fully approvable because it meets the requirements of the NO_X SIP Call and it is a strengthening measure for the one-hour ozone attainment plans for the Baltimore, Metropolitan Washington, D.C. and Philadelphia-Wilmington-Trenton ozone nonattainment areas.

III. Proposed Action

A. NO_X SIP Call Requirements

EPA is proposing to approve the Maryland's SIP revision consisting of its NO_X Reduction and Trading Program, which was submitted on April 27, 2000. EPA finds that Maryland's submittal is fully approvable because it meets the requirements of the NO_X SIP Call.

B. One-Hour Attainment Demonstration Plans

EPA is proposing to approve the Maryland's SIP revision concerning the adoption of the NO_X Reduction and Trading Program, which was submitted on April 27, 2000. EPA finds that Maryland's submittal is fully approvable because it is a strengthening measure for the Maryland's one-hour ozone attainment plans for its serious and severe ozone nonattainment areas, namely the Baltimore (severe), Metropolitan Washington, D.C. (serious) and Philadelphia-Wilmington-Trenton (severe) ozone nonattainment areas.. Interested parties may participate in the Federal rulemaking procedure by submitting written comments to the EPA Regional office listed in the *Addresses* section of this document. These comments will be considered before taking final action. EPA calls your attention to the November 9, 2000 deadline date for submittal of comments on this proposed action to approve this SIP revision submitted by the State of Maryland . The EPA is providing a shortened time period for comment for two reasons. As an initial matter, these revisions are non-controversial and EPA does not expect comment as Maryland's regulations incorporate by reference much of the federal rule found at 40 CFR Part 96 for implementation of the NO_X SIP call. Moreover, this SIP revision is necessary for full approval of the attainment demonstration SIP for the Metropolitan Washington, D.C. ozone nonattainment area. The EPA is currently under an obligation to complete rulemaking by November 15, 2000 fully approving the attainment demonstration for the Metropolitan Washington, D.C. ozone nonattainment area or, in the alternative, proposing a federal implementation plan.

IV. Administrative Requirements

Under Executive Order 12866 (58 FR 51735, October 4, 1993), this proposed action is not a ''significant regulatory action'' and therefore is not subject to review by the Office of Management and Budget. This proposed action merely approves state law as meeting federal requirements and imposes no additional requirements beyond those imposed by state law. Accordingly, the Administrator certifies that this proposed rule will not have a significant economic impact on a substantial number of small entities under the Regulatory Flexibility Act (5 U.S.C. 601 *et seq.*). Because this rule proposes to approve pre-existing requirements under state law and does not impose any additional enforceable duty beyond that required by state law, it does not contain any unfunded mandate or significantly or uniquely affect small governments, as described in the Unfunded Mandates Reform Act of 1995 (Public Law 104–4). For the same reason, this proposed rule also does not significantly or uniquely affect the communities of tribal governments, as specified by Executive Order 13084 (63 FR 27655, May 10, 1998). This proposed rule will not have substantial direct effects on the States, on the relationship between the national government and the States, or on the distribution of power and responsibilities among the various levels of government, as specified in Executive Order 13132 (64 FR 43255, August 10, 1999), because it merely approves a state rule implementing a federal standard, and does not alter the relationship or the distribution of power and responsibilities established in the Clean Air Act. This proposed rule also is not subject to Executive Order 13045 (62 FR 19885, April 23, 1997), because it is not economically significant.

In reviewing SIP submissions, EPA's role is to approve state choices, provided that they meet the criteria of the Clean Air Act. In this context, in the absence of a prior existing requirement for the State to use voluntary consensus standards (VCS), EPA has no authority to disapprove a SIP submission for failure to use VCS. It would thus be inconsistent with applicable law for EPA, when it reviews a SIP submission, to use VCS in place of a SIP submission that otherwise satisfies the provisions of the Clean Air Act. Thus, the requirements of section 12(d) of the National Technology Transfer and Advancement Act of 1995 (15 U.S.C. 272 note) do not apply. As required by section 3 of Executive Order 12988 (61 FR 4729, February 7, 1996), in issuing this proposed rule, EPA has taken the necessary steps to eliminate drafting errors and ambiguity, minimize potential litigation, and provide a clear legal standard for affected conduct. EPA has complied with Executive Order 12630 (53 FR 8859, March 15, 1988) by examining the takings implications of the rule in accordance with the ''Attorney General's Supplemental Guidelines for the Evaluation of Risk and Avoidance of Unanticipated Takings' issued under the executive order.

This proposed rule approving the Maryland NO_X Reduction and Trading Program does not impose an information collection burden under the provisions of the Paperwork Reduction Act of 1995 (44 U.S.C. 3501 *et seq.*).

List of Subjects in 40 CFR Part 52

Environmental protection, Air pollution control, Nitrogen dioxide, Ozone, Reporting and recordkeeping requirements.

Authority: 42 U.S.C. 7401 *et seq.*

Dated: October 12, 2000.

Bradley M. Campbell,

Regional Administrator, Region III.

[FR Doc. 00–26904 Filed 10–18–00; 8:45 am]

BILLING CODE 6560–50–P

ENVIRONMENTAL PROTECTION AGENCY

40 CFR Part 52

[MD107–3059; FRL–6888–1]

Approval and Promulgation of Air Quality Implementation Plans; Maryland; New Source Review Regulations

AGENCY: Environmental Protection Agency (EPA).

ACTION: Proposed rule.

SUMMARY: EPA is proposing to grant limited approval of a State Implementation Plan (SIP) revision submitted by the State of Maryland pursuant to the requirements of the Clean Air Act (CAA). This revision requires major new sources and major modifications to existing sources of volatile organic compounds (VOCs), and nitrogen oxides (NO_X) to meet certain new source review permitting requirements if they are proposing to locate or are located within the State of Maryland. These NSR requirements apply not only in those portions of Maryland designated as ozone nonattainment areas, but throughout the State of Maryland as the entire state is located within the Ozone Transport Region (OTR). The intended effect of this action is two-fold. First, it withdraws the rulemaking action proposing limited approval/disapproval of Maryland's NSR regulations published by EPA on May 25, 1994. Secondly, it proposes limited approval of Maryland's NSR regulations as Maryland has amended those regulations to correct the deficiencies noted in EPA's May 25, 1994 proposal.

DATES: Comments must be received on or before November 9, 2000.

ADDRESSES: Comments may be mailed to Makeba Morris, Chief, Permits and Technical Assessment Branch, Mailcode 3AP11, U.S. Environmental Protection Agency, Region III, 1650 Arch Street, Philadelphia, Pennsylvania 19103. Copies of the documents relevant to this action are available for public inspection during normal business hours at the Air Protection Division, U.S. Environmental Protection Agency, Region III, 1650 Arch Street, Philadelphia, Pennsylvania 19103, and at the Maryland Department of the Environment, 2500 Broening Highway, Baltimore, Maryland 21224.

FOR FURTHER INFORMATION CONTACT: Perry R. Pandya, Mailcode 3AP11, U.S. Environmental Protection Agency, Region III, 1650 Arch Street, Philadelphia, Pennsylvania 19103, (215) 814–2167.

SUPPLEMENTARY INFORMATION:

I. New Source Requirements and Maryland's SIP Revision

The CAA requires that all states submit revisions to their State Implementation plans (SIPs) requiring major new and major modified sources to meet certain new source review (NSR) requirements if they are located (or are proposing to locate) in areas designated nonattainment for a pollutant, or, in the case of VOC or NO_X sources, in the OTR. This requirement for a SIP revision applies to Maryland, which currently has areas designated nonattainment for ozone (a pollutant formed under certain meteorological conditions from precursor VOC and NO_X emissions). Additionally, the entire State of Maryland is located within the OTR.

On June 8, 1993, Maryland submitted a revision to its SIP requiring new major sources and major modifications of VOCs and NO_X to meet certain NSR requirements. On May 25, 1994, EPA proposed limited approval/disapproval of that SIP revision (59 FR 26994). At that time, EPA identified a number of deficiencies with Maryland's NSR regulations which the state would have to correct in order for EPA to grant final approval of its NSR regulations. The only comments submitted pursuant to EPA's May 25, 1994 proposal came from the State of Maryland.

On September 25, 2000, the State of Maryland submitted a revision to its SIP which consists of amendments to its NSR regulations. Those amendments were made to satisfy the deficiencies cited by EPA in its May 25, 1994 proposal.

EPA has determined that Maryland's NSR regulations, as amended and submitted on September 25, 2000, correct those deficiencies. For a detailed analysis of the deficiencies and how they were corrected, please refer to the Technical Support Documents in the Administrative Record. Therefore, EPA has determined that the NSR regulations submitted by the State of Maryland as a SIP revision on June 8, 1993 in conjunction with the amendments to those regulations submitted as a SIP revision on September 25, 2000 satisfy the CAA and its associated NSR regulations and policies.

A detailed description of federal NSR requirements, Maryland's NSR regulations, the deficiencies of the those regulations, and specific corrections that Maryland had to make to those NSR regulations were provided in EPA's May 25, 1994 proposed rulemaking notice (59 FR 26994) and shall not be restated here. Maryland's only amendments to its NSR regulations, as submitted on September 25, 2000, were those necessary to address the deficiencies cited by EPA in its May 25, 1994 proposed rulemaking notice. Rather than proceed to final action, however, given the length of time that has transpired since that proposed action, EPA believes it is prudent to withdraw the May 25, 1994 proposed limited approval/disapproval and to re-propose limited approval of Maryland's NSR regulations.

II. Why EPA is Proposing Limited Versus Full Approval of Maryland's NSR Regulations

Although the following explanation for EPA proposing limited approval was provided in the May 25, 1994 proposal, given that EPA is re-proposing limited approval at this time, it is being restated here.

The Code of Maryland Regulations at COMAR 26.11.17.04E provides that emissions reductions achieved by shutting down an existing source or permanently curtailing productions or operating hours below baseline levels are creditable if the reductions are permanent, quantifiable, and federally enforceable, and only if such reductions occurred on or after January 1, 1991. However, existing EPA regulations also provide that if a state does not have an EPA-approved attainment demonstration, then post-January 1, 1991 reductions achieved by a shutdown or curtailment of production or operating hours are only creditable if the state is current in its attainment planning obligations. See 54 FR 27286 (June 28, 1989). EPA's current rules also require that even in nonattainment areas with approved attainment demonstrations, only those shutdown or curtailment credits generated after the date of permit application are creditable. See 40 CFR part 51, appendix S.

Maryland's revised NSR regulation affirmatively allows persons seeking to build new major sources or major modifications to take credit for emission reductions resulting from shutdowns or curtailments of production or operating hours if those shutdowns or curtailments occurred after January 1, 1991. Because Maryland's regulation allows persons seeking to construct new

major sources or major modifications in a nonattainment area for which EPA has not approved an attainment plan to take credit for shutdowns or curtailments which occurred prior to the date they filed their permit application, Maryland's NSR regulation appears not to conform with the existing EPA prohibition on the use of pre-application shutdown or curtailment credits in nonattainment areas for which EPA has not approved an attainment plan. This prohibition is found at 40 CFR 51.165(a)(3)(ii)(C)(2).

On July 23, 1996, EPA published in the **Federal Register** a comprehensive rulemaking which proposed significant changes to the current NSR rules. This proposed rulemaking is hereinafter referred to as the ''NSR Reform Rulemaking.'' See 61 FR 38250. The NSR Reform Rulemaking proposes to revise regulations for the approval and promulgation of SIPs and the requirements for preparation, adoption, and submittal of implementation plans governing the NSR programs mandated by parts C and D of Title I of the CAA. Specifically, section VII. A. of EPA's NSR Reform Rulemaking, entitled ''Emissions Credits Resulting From Source Shutdowns and Curtailments,'' proposes to eliminate the current restrictions on crediting of emissions reductions from source shutdowns and curtailments that occurred after 1990. In the NSR Reform Rulemaking, EPA proposes two different alternatives for eliminating the prior shutdown prohibition. The second of these alternatives, entitled ''Shutdown Alternative 2,'' generally lifts the current offset restriction applicable to emissions reductions from source shutdowns and source curtailments for all nonattainment areas and all pollutants where such reductions occur after the base year of the emissions inventory used (or to be used) to meet the applicable provisions of part D of the CAA. See proposed section 51.165(a)(3)(ii)(C)(5), Alternative 2, 61 FR 38314. Under this alternative, states could allow emissions reductions from source shutdowns or curtailments to be used as offsets in all nonattainment areas and for all pollutants provided such reductions occurred after the base year of the emissions inventory used by the state to meet the applicable provisions of part D of the CAA. As explained above, Maryland's NSR rule allows sources to take credit for emissions reductions from shutdowns or curtailments of production or operating hours which occurred after January 1, 1991. This is consistent with Alternative 2 of EPA's NSR Reform Rulemaking, which credits only those emissions reductions from source shutdowns and curtailments occurring after 1990, i.e., the base year of the emissions inventory used to meet the applicable provisions of part D of the CAA. Thus, EPA believes that Maryland's NSR regulation is generally consistent with ''Shutdown Alternative 2'' as described in EPA's proposed NSR Reform Rulemaking, because both Maryland's rule and Alternative 2 allow sources to take credit only from emission reductions or curtailments occurring after January 1, 1991. Because Maryland's NSR regulation is generally consistent with Alternative 2 of EPA's proposed NSR Reform Rulemaking (as discussed above), and because approval of the revised version of Maryland's NSR regulation submitted on June 8, 1993 and as amended on September 25, 2000 would strengthen the SIP to be consistent with the CAA's provisions for NSR, EPA believes that Maryland's revised NSR regulation warrants limited approval. If EPA promulgates Alternative 2, this limited approval would convert to a full approval.

The alternative shutdown related provision set forth in EPA's NSR Reform Rulemaking proposal is entitled ''Shutdown Alternative 1.'' This alternative proposes, for ozone nonattainment areas, to lift the current offset restriction applicable to emissions reductions from source shutdowns and curtailments in such areas without EPA-approved attainment demonstrations, provided the emissions reductions occur after November 15, 1990 and the area has kept current with the CAA's scheduled part D ozone nonattainment planning requirements. See proposed section 51.165(a)(3)(ii)(C)(5) and (6), Alternative 1.

EPA acknowledges that either Alternative 1 or 2 may be eventually incorporated into the final NSR Reform Rulemaking upon its final promulgation. It is also noted that while EPA is, with this rulemaking, proposing to grant limited approval of Maryland's NSR regulation based on the rule's consistency with Shutdown Alternative 2 in EPA's NSR Reform rulemaking, the state may need to amend its NSR regulation if Shutdown Alternative 1 rather than Shutdown Alternative 2 is promulgated. If Alternative 1 is promulgated, EPA would determine the status of Maryland's conformance with part D ozone planning requirements for any nonattainment area. If Maryland's SIP were not current with the part D ozone planning requirements for any nonattainment area, EPA would make a SIP call for Maryland to amend its NSR rule to conform with Alternative 1 as provided in EPA's final NSR Reform Rulemaking.

Maryland's regulation does not state that any emission reductions must also have occurred after the base year of the emissions inventory most recently used (or to be used) to meet the applicable provisions of part D of the CAA. If an area in Maryland is designated as a new nonattainment area in the future, the baseline year of the inventory used in the attainment demonstration for that area would likely be after the January 1, 1991 baseline year used for areas designated as nonattainment at the time of the 1990 CAA amendments. Because Maryland does not state in its NSR regulation that any emission reductions must also have occurred after the base year of the emissions inventory most recently used (or to be used) to meet the applicable provisions of part D of the CAA, Maryland would have to modify its NSR rule if, in the future, Maryland is required to do a new attainment demonstration because a new area in Maryland is designated as nonattainment or the attainment demonstration for any current nonattainment area is revised to use a base year emission inventory other than 1990.

III. Proposed Action

Maryland's only amendments to its NSR regulations, as submitted on September 25, 2000, were those necessary to address the deficiencies cited by EPA in its May 25, 1994 proposal. Rather than proceed to grant final limited approval, however, given the length of time that has transpired since that proposed action, EPA believes it is prudent to withdraw the May 25, 2000 proposed limited approval/disapproval (FR 59 26994) and to re-propose limited approval of Maryland's NSR regulations.

EPA is hereby withdrawing the limited approval/disapproval action of Maryland's NSR SIP revision that was published in the **Federal Register** on May 25, 1994 (FR 59 26994). EPA is re-proposing limited approval. Such approval would strengthen the SIP for meeting the NSR requirements of the CAA. Because Maryland's NSR regulations are generally consistent with Alternative 2 of EPA's proposed NSR Reform Rulemaking (as discussed above), and because approval of the revised version of Maryland's NSR regulations submitted on June 8, 1993 and September 25, 2000 would strengthen the SIP to be consistent with the CAA's provisions for NSR, EPA believes that Maryland's revised NSR regulations warrants limited approval. If EPA promulgates Alternative 2, this

limited approval would convert to a full approval.

Written comments must be received on or before November 9, 2000. EPA calls your attention to the November 9, 2000 deadline date for submittal of comments on this proposed action to grant limited approval of this SIP revision submitted by the State of Maryland. The EPA is providing a shortened time period for comment for two reasons. As an initial matter, this revision is non-controversial and EPA does not expect comment as we proposed approval of it previously and got comments only from the State of Maryland. Maryland's recent revisions were done simply to correct the deficiencies noted in our previous proposed action. Moreover, this SIP revision is necessary for full approval of the attainment demonstration SIP for the Metropolitan Washington, D.C. ozone nonattainment area. The EPA is currently under an obligation to complete rulemaking by November 15, 2000 fully approving the attainment demonstration for the Metropolitan Washington, D.C. ozone nonattainment area or, in the alternative, proposing a Federal implementation plan.

IV. Administrative Requirements

Under Executive Order 12866 (58 FR 51735, October 4, 1993), this proposed action is not a ''significant regulatory action'' and therefore is not subject to review by the Office of Management and Budget. This proposed action merely approves state law as meeting federal requirements and imposes no additional requirements beyond those imposed by state law. Accordingly, the Administrator certifies that this proposed rule will not have a significant economic impact on a substantial number of small entities under the Regulatory Flexibility Act (5 U.S.C. 601 *et seq.*). Because this rule proposes to approve pre-existing requirements under state law and does not impose any additional enforceable duty beyond that required by state law, it does not contain any unfunded mandate or significantly or uniquely affect small governments, as described in the Unfunded Mandates Reform Act of 1995 (Public Law 104–4). For the same reason, this proposed rule also does not significantly or uniquely affect the communities of tribal governments, as specified by Executive Order 13084 (63 FR 27655, May 10, 1998). This proposed rule will not have substantial direct effects on the States, on the relationship between the national government and the States, or on the distribution of power and responsibilities among the various levels of government, as specified in Executive Order 13132 (64 FR 43255, August 10, 1999), because it merely approves a state rule implementing a federal standard, and does not alter the relationship or the distribution of power and responsibilities established in the Clean Air Act. This proposed rule also is not subject to Executive Order 13045 (62 FR 19885, April 23, 1997), because it is not economically significant. In reviewing SIP submissions, EPA's role is to approve state choices, provided that they meet the criteria of the Clean Air Act. In this context, in the absence of a prior existing requirement for the State to use voluntary consensus standards (VCS), EPA has no authority to disapprove a SIP submission for failure to use VCS. It would thus be inconsistent with applicable law for EPA, when it reviews a SIP submission, to use VCS in place of a SIP submission that otherwise satisfies the provisions of the Clean Air Act. Thus, the requirements of section 12(d) of the National Technology Transfer and Advancement Act of 1995 (15 U.S.C. 272 note) do not apply. As required by section 3 of Executive Order 12988 (61 FR 4729, February 7, 1996), in issuing this proposed rule, EPA has taken the necessary steps to eliminate drafting errors and ambiguity, minimize potential litigation, and provide a clear legal standard for affected conduct. EPA has complied with Executive Order 12630 (53 FR 8859, March 15, 1988) by examining the takings implications of the rule in accordance with the ''Attorney General's Supplemental Guidelines for the Evaluation of Risk and Avoidance of Unanticipated Takings'' issued under the executive order. This proposed rule to grant limited approval of Maryland's NSR regulations does not impose an information collection burden under the provisions of the Paperwork Reduction Act of 1995 (44 U.S.C. 3501 *et seq.*).

List of Subjects in 40 CFR Part 52

Environmental protection, Air pollution control, Hydrocarbons, Ozone, Reporting and recordkeeping requirements.

Authority: 42 U.S.C. 7401–7671q.

Dated: October 13, 2000.

Thomas Voltaggio,

Acting Regional Administrator, Region III.

[FR Doc. 00–26903 Filed 10–18–00; 8:45 am]

BILLING CODE 6560–50–P

ENVIRONMENTAL PROTECTION AGENCY

40 CFR Part 52

[MD 096–3053; FRL–6887–9]

Approval and Promulgation of Air Quality Implementation Plans; Maryland; Nitrogen Oxides Budget Program

AGENCY: Environmental Protection Agency (EPA).

ACTION: Proposed rule.

SUMMARY: EPA is proposing to approve a State Implementation Plan (SIP) revision submitted by the State of Maryland. The revision consists of amendments to Maryland's Nitrogen Oxides (NO_X) Budget Program. The revisions implement the Ozone Transport Commission's (OTC) September 27, 1994 Memorandum of Understanding (MOU) in Maryland. In accordance with the MOU, the revisions implement the Maryland portion of a regional NO_X cap and trade program that significantly reduces NO_X emissions generated within the Ozone Transport Region (OTR). EPA is approving these revisions in accordance with the requirements of the Clean Air Act.

DATES: Written comments must be received on or before November 9, 2000.

ADDRESSES: Written comments may be mailed to David L. Arnold, Chief, Ozone & Mobile Sources Branch, Mailcode 3AP21, U.S. EPA, Region III, 1650 Arch Street, Philadelphia, PA 19103. Copies of the documents relevant to this action are available for public inspection during normal business hours at the Air Protection Division, EPA, Region III, 1650 Arch Street, Philadelphia, PA 19103 and Maryland Department of the Environment, 2500 Broening Highway, Baltimore, MD, 21224.

FOR FURTHER INFORMATION CONTACT: Cristina Fernandez, (215) 814–2178, or by e-mail at fernandez.cristina@epa.gov.

SUPPLEMENTARY INFORMATION:

Background

On August 28,1998, the Maryland Department of the Environment (MDE) submitted a revision to its SIP. The revision to the SIP includes the adoption of new sections .01–.14 under a new chapter, COMAR 26.11.27—Post RACT Requirements for NO_X Sources (Nitrogen Oxides (NO_X) Budget Program) and new sections .01–.13 under a new chapter, COMAR 26.11.28—Polices and Procedures Relating to Maryland's NO_X Budget Program. On November 16, 1999 and

March 20, 2000, Maryland submitted amendments to its August 28, 1998 SIP revision request.

The Maryland's NO_X Budget Program regulations are part of a regional NO_X reduction program based upon an MOU drawn between the member states of the OTC. The OTC adopted a MOU on September 27, 1994, committing the signatory states to the development and implementation of a two phase region-wide reduction in NO_X emissions by 1999 and 2003, respectively. As reasonably available control technology (RACT) to reduce NO_X emissions was required to be implemented by May of 1995, the MOU refers to the reduction in NO_X emissions to be achieved by 1999 as Phase II; and the reduction in NO_X emissions to be achieved by 2003 as Phase III. The OTC member states include Maine, New Hampshire, Vermont, Massachusetts, Connecticut, Rhode Island, New York, New Jersey, Pennsylvania, Maryland, Delaware, the northern counties of Virginia, and the District of Columbia. All of the OTC members, with the exception of the Commonwealth of Virginia, signed the September 27, 1994 MOU. The OTC MOU requires a reduction in ozone season NO_X emissions from utility and large industrial combustion facilities within the OTR to further the effort to achieve the health-based National Ambient Air Quality Standard (NAAQS) for ozone. In the MOU, the OTC states agreed to propose regulations for the control of NO_X emissions in accordance with the following guidelines:

1. The level of NO_X required would be established from a 1990 baseline emissions level.

2. The reduction would vary by location, or zone, and would be implemented in two phases utilizing a region wide trading program.

3. The reduction would be determined based on the less stringent of each of the following:

a. By May 1, 1999, the affected facilities in the inner zone shall reduce their rate of NO_X emissions by 65% from baseline, or emit NO_X at a rate no greater than 0.20 pounds per million Btu. (This is a Phase II requirement.)

b. By May 1, 1999, the affected facilities in the outer zone shall reduce their rate of NO_X emissions by 55% from baseline, or shall emit NO_X at a rate no greater than 0.20 pounds per million Btu. (This is a Phase II requirement.)

c. By May 1, 2003, the affected facilities in the inner and outer zones shall reduce their rate of NO_X emissions by 75% from baseline, or shall emit NO_X at a rate no greater than 0.15 pounds per million Btu. (This is a Phase III requirement.)

d. By May 1, 2003, the affected facilities in the Northern zone shall reduce their rate of NO_X emissions by 55% from baseline, or shall emit NO_X at a rate no greater than 0.20 pounds per million Btu. (This is a Phase III requirement.)

A Task Force of representatives from the OTC states, organized through the Northeast States for Coordinated Air Use Management (NESCAUM) and the Mid-Atlantic Regional Air Management Association (MARAMA), was charged with the task of developing a Model Rule that would implement the program defined by the OTC MOU. During 1995 and 1996, the NESCAUM/ MARAMA NO_X Budget Task Force worked with EPA and developed a model rule as a template for OTC states to adopt their own rules to implement the OTC MOU. The model was issued May 1, 1996. The model rule was developed by and for the OTC states to implement the Phase II reductions called for in the MOU to be achieved by May 1, 1999. The model rule does not include the implementation of Phase III.

Summary of SIP Revision

Maryland's regulations of COMAR 26.11.27, Post RACT Requirements for NO_X Sources (NO_X Budget Program) and COMAR 26.11.28, Polices and Procedures Relating to Maryland's NO_X Budget Program are based solely upon the ''NESCAUM/MARAMA NO_X Budget Rule'' issued in May 1, 1996. The model rule was developed by the states in the OTR using the EPA's economic incentive rules (67 FR 16690) which were published on April 7, 1994, as the general regulatory framework.

On August 28, 1998, Maryland submitted a revision to its SIP. The revision consists of amendments to COMAR 26.11.27, Post RACT Requirements for NO_X Sources (NO_X Budget Program) and COMAR 26.11.28, Polices and Procedures Relating to Maryland's NO_X Budget Program. Post RACT Requirements for NO_X Sources, COMAR 26.11.27, is divided in fourteen sections: (.01) Definitions; (.02) Incorporation by Reference; (.03) Applicability; (.04) General Requirements; (.05) Allowance Allocations; (.06) Identification of Authorized Account Representatives; (.07) Allowance Banking; (.08) Emission Monitoring; (.09) Reporting; (.10) Record Keeping; (.11) End-of-Season Reconciliation; (.12) Compliance Certification; (.13) Penalties; (.14) Audit. Polices and Procedures Relating to Maryland's NO_X Budget Program, COMAR 26.11.28, is divided in thirteen sections: (.01) Scope; (.02) Definitions; (.03) Procedures Relating to Compliance Accounts; (.04) Procedures Relating to General Accounts; (.05) Allowance Banking, (.06) Allowance Transfer; (.07) Emissions Monitoring; (.08) Early Reduction Allowances; (.09) Opt-in Procedures; (.10) Audit Provisions; (.11) Allocations to Units in Operation in 1990; (.12) Allocations to Budget Sources Beginning Operation or for Which a Permit Was Issued After 1990 and Before January 1, 1998; (.13) Percent Contribution of Budget by Company.

On November 16, 1999, MDE submitted amendments to its August 28, 1998 SIP revision request. The purpose of these amendments is to change the compliance date of the Maryland NO_X Budget Program from May 1, 1999 to May 1, 2000. The revisions to the August 28, 1998 submittal include amendments to Regulations (.04) General Requirements, (.07) Allowance Banking, and (.11) End-of-Season Reconciliation under COMAR 26.11.27 and the repeal of Regulation (.08) Early Reduction Allowances under COMAR 26.11.28.

On March 20, 2000, MDE submitted amendments to its August 28, 1998 SIP revision request consisting of two enforceable consent agreements between MDE and the Baltimore Gas and Electric Company and the Potomac Electric Power Company. These consent agreements impose special conditions and time lines for both companies regarding the implementation of Maryland's NO_X Budget Trading Program requirements. A more detailed description of Maryland's NO_X Budget Trading Program requirements, the two consent agreements and EPA's rationale for approving them as a SIP revision are provided in the Technical Support Document (TSD) prepared for this rule. Copies of the TSD are available upon request from the EPA Regional office listed in the **ADDRESSES** section of this document.

Proposed Action

EPA is proposing to approve a revision to the Maryland SIP consisting of COMAR 26.11.27, Post RACT Requirements for NO_X Sources (NO_X Budget Program) and COMAR 26.11.28, Polices and Procedures Relating to Maryland's NO_X Budget Program, as submitted on August 28, 1998 and as amended on November 16, 1999 and March 20, 2000. These revisions implement Maryland's portion of Phase II of the OTC's MOU to reduce nitrogen oxides.

Written comments must be received on or before November 9, 2000. EPA calls your attention to the November 9,

2000 deadline date for submittal of comments on this proposed action to approve this SIP revision submitted by the State of Maryland. The EPA is providing a shortened time period for comment for two reasons. As an initial matter, this revision is non-controversial and EPA does not expect comment as Maryland's OTC NO_X Budget Program is based upon the model rule developed by the NESCAUM and MARAMA states. The two enforceable consent agreements between MDE and the Baltimore Gas and Electric Company and the Potomac Electric Power Company are source-specific and affect no other facilities. Moreover, this SIP revision is necessary for full approval of the attainment demonstration SIP for the Metropolitan Washington, D.C. ozone nonattainment area. The EPA is currently under an obligation to complete rulemaking by November 15, 2000 fully approving the attainment demonstration for the Metropolitan Washington, D.C. ozone nonattainment area or, in the alternative, proposing a federal implementation plan.

Administrative Requirements

Under Executive Order 12866 (58 FR 51735, October 4, 1993), this proposed action is not a ''significant regulatory action'' and therefore is not subject to review by the Office of Management and Budget. This action merely proposes to approve state law as meeting federal requirements and imposes no additional requirements beyond those imposed by state law. Accordingly, the Administrator certifies that this proposed rule will not have a significant economic impact on a substantial number of small entities under the Regulatory Flexibility Act (5 U.S.C. 601 *et seq.*). Because this rule proposes to approve pre-existing requirements under state law and does not impose any additional enforceable duty beyond that required by state law, it does not contain any unfunded mandate or significantly or uniquely affect small governments, as described in the Unfunded Mandates Reform Act of 1995 (Public Law 104–4). For the same reason, this proposed rule also does not significantly or uniquely affect the communities of tribal governments, as specified by Executive Order 13084 (63 FR 27655, May 10, 1998). This proposed rule will not have substantial direct effects on the States, on the relationship between the national government and the States, or on the distribution of power and responsibilities among the various levels of government, as specified in Executive Order 13132 (64 FR 43255, August 10, 1999), because it merely proposes to approve a state rule implementing a federal standard, and does not alter the relationship or the distribution of power and responsibilities established in the Clean Air Act. This proposed rule also is not subject to Executive Order 13045 (62 FR 19885, April 23, 1997), because it is not economically significant. In reviewing SIP submissions, EPA's role is to approve state choices, provided that they meet the criteria of the Clean Air Act. In this context, in the absence of a prior existing requirement for the State to use voluntary consensus standards (VCS), EPA has no authority to disapprove a SIP submission for failure to use VCS. It would thus be inconsistent with applicable law for EPA, when it reviews a SIP submission, to use VCS in place of a SIP submission that otherwise satisfies the provisions of the Clean Air Act. Thus, the requirements of section 12(d) of the National Technology Transfer and Advancement Act of 1995 (15 U.S.C. 272 note) do not apply. As required by section 3 of Executive Order 12988 (61 FR 4729, February 7, 1996), in issuing this proposed rule, EPA has taken the necessary steps to eliminate drafting errors and ambiguity, minimize potential litigation, and provide a clear legal standard for affected conduct. EPA has complied with Executive Order 12630 (53 FR 8859, March 15, 1988) by examining the takings implications of the rule in accordance with the ''Attorney General's Supplemental Guidelines for the Evaluation of Risk and Avoidance of Unanticipated Takings' issued under the executive order. This action to propose approval of Maryland NO_X Budget Program rule does not impose an information collection burden under the provisions of the Paperwork Reduction Act of 1995 (44 U.S.C. 3501 *et seq.*).

List of Subjects in 40 CFR Part 52

Environmental protection, Air pollution control, Nitrogen dioxide, Ozone, Reporting and recordkeeping requirements.

Authority: 42 U.S.C. 7401 *et seq.*

Dated: October 13, 2000.

Thomas Voltaggio,

Acting Regional Administrator, Region III.

[FR Doc. 00–26902 Filed 10–18–00; 8:45 am]

BILLING CODE 6560–50–P

ENVIRONMENTAL PROTECTION AGENCY

40 CFR Part 52

[DC048–2022; FRL–6887–8]

Approval and Promulgation of Air Quality Implementation Plans; District of Columbia; Nitrogen Oxides Budget Program

AGENCY: Environmental Protection Agency (EPA).

ACTION: Proposed rule.

SUMMARY: EPA is proposing to approve a State Implementation Plan (SIP) revision submitted by the District of Columbia (the District). This revision implements the District's portion of the Ozone Transport Commission's (OTC) September 27, 1994 Memorandum of Understanding (MOU) which describes a regional nitrogen oxides (NO_X) cap and trade program that will significantly reduce NO_X emissions generated within the Ozone Transport Region (OTR). The intended effect of this action is to propose approval of the District's regulations entitled, NO_X Emissions Budget Program as a SIP revision in accordance with the requirements of the Clean Air Act.

DATES: Written comments must be received on or before November 9, 2000.

ADDRESSES: Written comments may be mailed to David L. Arnold, Chief, Ozone & Mobile Sources Branch, Mailcode 3AP21, U.S. Environmental Protection Agency, Region III, 1650 Arch Street, Philadelphia, Pennsylvania 19103. Copies of the documents relevant to this action are available for public inspection during normal business hours at the Air Protection Division, U.S. Environmental Protection Agency, Region III, 1650 Arch Street, Philadelphia, Pennsylvania 19103; and District of Columbia Department of Public Health, Air Quality Division, 51 N Street, N.E., Washington, DC 20002.

FOR FURTHER INFORMATION CONTACT: Cristina Fernandez, (215) 814–2178, or via e-mail at fernandez.cristina@epa.gov.

SUPPLEMENTARY INFORMATION:

I. Background

On August 28, 2000, the District's Department of Health submitted a revision to its SIP. The revision to the SIP includes the addition of a new Chapter 10, Nitrogen Oxides Emissions Budget Program, to Title 20 of the District of Columbia Municipal Regulations (DCMR).

The District's NO_X Budget Program regulations are part of a regional NO_X

reduction program based upon an MOU drawn between the member states of the OTC. The OTC adopted a MOU on September 27, 1994, committing the signatory states to the development and implementation of a two phase region-wide reduction in NO_X emissions by 1999 and 2003, respectively. As reasonably available control technology (RACT) to reduce NO_X emissions was required to be implemented by May of 1995, the MOU refers to the reduction in NO_X emissions to be achieved by 1999 as Phase II; and the reduction in NO_X emissions to be achieved by 2003 as Phase III. The OTC member states include Maine, New Hampshire, Vermont, Massachusetts, Connecticut, Rhode Island, New York, New Jersey, Pennsylvania, Maryland, Delaware, the northern counties of Virginia, and the District of Columbia. All of the OTC members, with the exception of the Commonwealth of Virginia, signed the September 27, 1994 MOU. The OTC MOU requires a reduction in ozone season NO_X emissions from utility and large industrial combustion facilities within the OTR to further the effort to achieve the health-based National Ambient Air Quality Standard (NAAQS) for ozone. In the MOU, the OTC states agreed to propose regulations for the control of NO_X emissions in accordance with the following guidelines:

1. The level of NO_X required would be established from a 1990 baseline emissions level.

2. The reduction would vary by location, or zone, and would be implemented in two phases utilizing a region wide trading program.

3. The reduction would be determined based on the less stringent of each of the following:

a. By May 1, 1999, the affected facilities in the inner zone shall reduce their rate of NO_X emissions by 65% from baseline, or emit NO_X at a rate no greater than 0.20 pounds per million Btu. (This is a Phase II requirement.)

b. By May 1, 1999, the affected facilities in the outer zone shall reduce their rate of NO_X emissions by 55% from baseline, or shall emit NO_X at a rate no greater than 0.20 pounds per million Btu. (This is a Phase II requirement.)

c. By May 1, 2003, the affected facilities in the inner and outer zones shall reduce their rate of NO_X emissions by 75% from baseline, or shall emit NO_X at a rate no greater than 0.15 pounds per million Btu. (This is a Phase III requirement.)

d. By May 1, 2003, the affected facilities in the Northern zone shall reduce their rate of NO_X emissions by 55% from baseline, or shall emit NO_X at a rate no greater than 0.20 pounds per million Btu. (This is a Phase III requirement.)

A Task Force of representatives from the OTC states, organized through the Northeast States for Coordinated Air Use Management (NESCAUM) and the Mid-Atlantic Regional Air Management Association (MARAMA), was charged with the task of developing a Model Rule that would implement the program defined by the OTC MOU. During 1995 and 1996, the NESCAUM/MARAMA NO_X Budget Task Force worked with EPA and developed a model rule as a template for OTC states to adopt their own rules to implement the OTC MOU. The model was issued May 1, 1996. The model rule was developed by and for the OTC states to implement the Phase II reductions called for in the MOU to be achieved by May 1, 1999. The model rule does not include the implementation of Phase III.

The regulations of the District's NO_X Budget Program, 20 DCMR 1000, are based solely upon the ''NESCAUM/MARAMA NO_X Budget Rule'' issued in May 1, 1996. The model rule was developed by the states in the OTR using the EPA's economic incentive rules (67 FR 16690) which were published on April 7, 1994, as the general regulatory framework.

The District of Columbia's OTC NO_X Budget Program establishes NO_X emission allowances for each ozone season of each year from May 1st through September 30th. This program identifies the budgeted sources and identifies the number of allowances each budget source is allocated.

The District's NO_X Budget Program includes the adoption of a new chapter: Chapter 10—Nitrogen Oxides Emissions Budget Program. Chapter 10—Nitrogen Oxides Emissions Budget Program is divided in fourteen sections: (1000) Applicability; (1001) General Provisions; (1002) Allowance Allocation; (1003) Permits; (1004) Allowance Transfer and Use; (1005) Allowance Banking; (1006) NO_X Allowance Tracking System; (1007) Emission Monitoring; (1008) Record Keeping; (1009) Reporting; (1010) End-of-Season Reconciliation; (1011) Compliance Certification; (1012) Penalties; (1013) Program Audit; (1099) Definitions and Abbreviations.

II. Proposed Action

EPA is proposing to approve the SIP revision request submitted for parallel processing by the District's Department of Health on August 28, 2000. The SIP revision consists of the District's proposed Chapter 10—Nitrogen Oxides Emissions Budget Program, for implementing Phase II of the OTC's MOU to reduce nitrogen oxides.

This revision is being proposed under a procedure called parallel processing, whereby EPA proposes rulemaking action concurrently with a state's procedures for amending its regulations. If the proposed revision is substantially changed in areas other than those identified in this notice, EPA will evaluate those changes and may publish another proposed rulemaking. If no substantial changes are made other than those areas cited in this notice, we will publish a final rulemaking on the revision. The final rulemaking action by EPA will occur only after the SIP revision has been adopted by the District of Columbia and submitted formally to EPA for incorporation into the SIP. Interested parties may participate in the Federal rulemaking procedure by submitting written comments to the EPA Regional office listed in the **ADDRESSES** section of this notice. These comments will be considered before taking any final action. EPA calls your attention to the November 9, 2000 deadline date for submittal of comments on this proposed action to approve this SIP revision submitted by the District of Columbia. The EPA is providing a shortened time period for comment for two reasons. As an initial matter, these revisions are non-controversial and EPA does not expect comment because the District adopted the model rule developed by the NESCAUM and MARAMA states. Moreover, these SIP revisions are necessary for full approval of the attainment demonstration SIP for the Metropolitan Washington, D.C. ozone nonattainment area. The EPA is currently under an obligation to complete rulemaking by November 15, 2000 fully approving the attainment demonstration for the Metropolitan Washington, D.C. ozone nonattainment area or, in the alternative, proposing a federal implementation plan.

III. Administrative Requirements

Under Executive Order 12866 (58 FR 51735, October 4, 1993), this proposed action is not a ''significant regulatory action'' and therefore is not subject to review by the Office of Management and Budget. This action merely proposes to approve state law as meeting federal requirements and imposes no additional requirements beyond those imposed by state law. Accordingly, the Administrator certifies that this proposed rule will not have a significant economic impact on a substantial number of small entities under the Regulatory Flexibility Act (5 U.S.C. 601 *et seq.*). Because this rule proposes to

approve pre-existing requirements under state law and does not impose any additional enforceable duty beyond that required by state law, it does not contain any unfunded mandate or significantly or uniquely affect small governments, as described in the Unfunded Mandates Reform Act of 1995 (Public Law 104–4). For the same reason, this proposed rule also does not significantly or uniquely affect the communities of tribal governments, as specified by Executive Order 13084 (63 FR 27655, May 10, 1998). This proposed rule will not have substantial direct effects on the States, on the relationship between the national government and the States, or on the distribution of power and responsibilities among the various levels of government, as specified in Executive Order 13132 (64 FR 43255, August 10, 1999), because it merely proposes to approve a state rule implementing a federal standard, and does not alter the relationship or the distribution of power and responsibilities established in the Clean Air Act. This proposed rule also is not subject to Executive Order 13045 (62 FR 19885, April 23, 1997), because it is not economically significant. In reviewing SIP submissions, EPA's role is to approve state choices, provided that they meet the criteria of the Clean Air Act. In this context, in the absence of a prior existing requirement for the State to use voluntary consensus standards (VCS), EPA has no authority to disapprove a SIP submission for failure to use VCS. It would thus be inconsistent with applicable law for EPA, when it reviews a SIP submission, to use VCS in place of a SIP submission that otherwise satisfies the provisions of the Clean Air Act. Thus, the requirements of section 12(d) of the National Technology Transfer and Advancement Act of 1995 (15 U.S.C. 272 note) do not apply. As required by section 3 of Executive Order 12988 (61 FR 4729, February 7, 1996), in issuing this proposed rule, EPA has taken the necessary steps to eliminate drafting errors and ambiguity, minimize potential litigation, and provide a clear legal standard for affected conduct. EPA has complied with Executive Order 12630 (53 FR 8859, March 15, 1988) by examining the takings implications of the rule in accordance with the ''Attorney General's Supplemental Guidelines for the Evaluation of Risk and Avoidance of Unanticipated Takings'' issued under the Executive order. This proposed rule to approve the District of Columbia's Nitrogen Oxides Emissions Budget Program regulations to implement Phase II of the OTC MOU does not impose an information collection burden under the provisions of the Paperwork Reduction Act of 1995 (44 U.S.C. 3501 *et seq.*).

List of Subjects in 40 CFR Part 52

Environmental protection, Air pollution control, Nitrogen dioxide, Ozone, Reporting and recordkeeping requirements.

Authority: 42 U.S.C. 7401 *et seq.*

Dated: October 13, 2000.

Thomas Voltaggio,

Acting Regional Administrator, Region III.

[FR Doc. 00–26901 Filed 10–18–00; 8:45 am]

BILLING CODE 6560–50–P

ENVIRONMENTAL PROTECTION AGENCY

40 CFR Part 52

[VA109–5050b; FRL–6887–6]

Approval and Promulgation of Air Quality Implementation Plans; Virginia; Approval of Approval of Removal of TSP Ambient Standards

AGENCY: Environmental Protection Agency (EPA).

ACTION: Proposed rule.

SUMMARY: EPA proposes to approve a State Implementation Plan (SIP) revision submitted by the Commonwealth of Virginia for the purpose of removing references to total suspended particulate (TSP) ambient standards and levels from its regulations for ambient air quality standards and for air pollution episode prevention. In the Final Rules section of this **Federal Register**, EPA is approving the State's SIP submittal as a direct final rule without prior proposal because the Agency views this as a noncontroversial submittal and anticipates no adverse comments. A detailed rationale for the approval is set forth in the direct final rule. If no adverse comments are received in response to this action, no further activity is contemplated. If EPA receives adverse comments, the direct final rule will be withdrawn and all public comments received will be addressed in a subsequent final rule based upon this proposed rule. EPA will not institute a second comment period. Any parties interested in commenting on this action should do so at this time.

DATES: Comments must be received in writing by November 20, 2000.

ADDRESSES: Written comments should be addressed to Mr. Denis Lohman, Acting Chief, Technical Assessment Branch, Mailcode 3AP22, U.S. Environmental Protection Agency, Region III, 1650 Arch Street, Philadelphia, Pennsylvania 19103. Copies of the documents relevant to this action are available for public inspection during normal business hours at the Air Protection Division, U.S. Environmental Protection Agency, Region III, 1650 Arch Street, Philadelphia, Pennsylvania 19103; and Virginia Department of Environmental Quality, 629 East Main Street, Richmond, Virginia, 23219.

FOR FURTHER INFORMATION CONTACT: Ruth E. Knapp, (215) 814–2191, at the EPA Region III address above, or by e-mail at knapp.ruth@epa.gov.

SUPPLEMENTARY INFORMATION: For further information on this SIP revision related to removal of TSP ambient standards and levels from Virginia's regulations, please see the information provided in the direct final action, with the same title, that is located in the ''Rules and Regulations'' section of this **Federal Register** publication.

Dated: October 5, 2000.

Bradley M. Campbell,

Regional Administrator, Region III.

[FR Doc. 00–26909 Filed 10–18–00; 8:45 am]

BILLING CODE 6560–50–P

DEPARTMENT OF HEALTH AND HUMAN SERVICES

Health Care Financing Administration

42 CFR Part 410

[HCFA–1088–P]

RIN 0938–AJ71

Medicare Program; Clinical Social Worker Services

AGENCY: Health Care Financing Administration (HCFA), HHS.

ACTION: Proposed rule.

SUMMARY: This proposed rule would permit separate Medicare Part B payment for certain psychotherapy services of clinical social workers furnished to a skilled nursing facility resident whose stay is not covered by Medicare. This rule would benefit residents of skilled nursing facilities who receive psychological services from clinical social workers.

DATES: We will consider comments if we receive them at the appropriate address, as provided below, no later than 5 p.m. on December 18, 2000.

ADDRESSES: Mail written comments (one original and three copies) to the following address ONLY: Health Care Financing Administration, Department of Health and Human Services,

Attention: HCFA–1088–P, P.O. Box 8013, Baltimore, MD 21244–8013.

If you prefer, you may deliver by courier, your written comments (one original and three copies) to one of the following addresses:

Room 443–G, Hubert H. Humphrey Building, 200 Independence Avenue, SW., Washington, DC 20201 or

Room C5–14–03, Central Building, 7500 Security Boulevard, Baltimore, MD 21244–1850.

Comments mailed to those addresses may be delayed and could be considered late.

Because of staffing and resource limitations, we cannot accept comments by facsimile (FAX) transmission. In commenting, please refer to file code HCFA–1088–P.

Comments received timely will be available for public inspection as they are received, generally beginning approximately 3 weeks after publication of a document, in Room 443–G of the Department's offices at 200 Independence Avenue, SW, Washington, DC, 20201 on Monday through Friday of each week from 8:30 a.m. to 5:00 p.m. (Phone (202) 690–7890).

FOR FURTHER INFORMATION CONTACT: Paul W. Kim, (410) 786–7410.

SUPPLEMENTARY INFORMATION:

I. Background

Section 6113 of the Omnibus Budget Reconciliation Act of 1989 (OBRA 1989) (Public Law 101–239) amended section 1861(s)(2) of the Social Security Act (the Act) to provide coverage of clinical social worker (CSW) services under Medicare Part B. OBRA 1989 also amended section 1861(hh) of the Act and defined CSW services. This definition included services performed by a CSW for the diagnosis and treatment of mental illness but excluded those services furnished to an inpatient of a skilled nursing facility (SNF) that the SNF is required to provide for participation in Medicare.

On December 29, 1993, we published a proposed rule (58 FR 68829) on a number of issues regarding services of CSWs and clinical psychologists (CPs). That proposed rule also solicited public comment to identify any CSW service that a SNF is not already required to provide under section 1819(b)(4)(A) of the Act. Based on the comments we received at that time, we were unable to identify any specific service performed by CSWs for SNF residents that a SNF was not required to provide. Consequently, under the final rule (63 FR 20110) on CSW and CP services published on April 23, 1998, separate Medicare Part B payment would not be made for CSW services furnished to SNF residents beginning June 22, 1998. We decided to delay implementation of the new rule.

II. Provisions of the Proposed Regulations

The SNF certification standards at section 1819(b)(4)(A)(i) through (b)(4)(A)(vii) of the Act contain requirements relating specifically to social services, along with a broader mandate for SNFs to furnish a variety of services to the extent necessary ''* * * to attain or maintain the highest practicable physical, mental, and psychosocial well-being of each resident * * *.'' As we observed in the preamble to the April 23, 1998 final rule, defining the scope of coverage under the Part B CSW benefit as excluding the services required under this more sweeping mandate would effectively preclude any CSW coverage whatsoever in the SNF setting, since this broad mandate could be interpreted to encompass virtually any service that a social worker conceivably could perform in this setting.

Upon further consideration, however, we believe that the manner in which section 1861(hh) was drafted in the original CSW legislation indicates that the statute does not require the exclusion of CSW coverage in this setting to be so absolute. Instead, we believe that it is appropriate to draw a distinction between a set of services that the SNF certification standards require social workers to furnish (and which, thus, fall outside the scope of the CSW benefit) and other services (which remain coverable under the CSW benefit).

We believe one possible approach would be to distinguish between those certification standards that, on the one hand, pertain specifically and exclusively to social workers—that is, the ''medically-related social services'' described in section 1819(b)(4)(A)(ii) of the Act, and the ''social services'' for which section 1819(b)(7) of the Act requires SNFs with more than 120 beds to hire a full-time social worker—and, on the other, those ''specialized rehabilitative services'' described in section 1819(b)(4)(A)(i) of the Act, which can be furnished by a variety of different practitioner types that in some cases may include social workers. We believe that the psychotherapeutic services addressed in this proposed rule belong to the latter category and, as such, should not be subject to the coverage exclusion for CSW services furnished in SNFs.

Under this proposal, we would pay CSWs for the (Physicians') Current Procedural Terminology (CPT) codes (4th Edition, 1999; copyrighted by the American Medical Association) which represent psychotherapy services that are furnished to SNF residents and billed by CPs and that the CSWs are legally authorized to perform under State law. Specifically, we would pay for CPT codes 90801, 90802, 90816, 90818, 90821, 90823, 90826, 90828, 90846, 90847, 90853, and 90857. However, we would not pay under Part B for any other services that CSWs furnish to SNF residents, since we regard these services (for example, care planning and discharge planning) as already required to be furnished by social workers under the SNF participation requirements.

Further, this proposal would not affect payment for CSW services furnished to an SNF resident during the course of an inpatient stay that is covered under Medicare Part A. In accordance with section 1888(e) of the Act, as established by section 4432(a) of the Balanced Budget Act of 1997 (BBA 1997, Public Law 105–33), an SNF receives payment under the prospective payment system (PPS) for virtually all of the services that its residents receive during a covered Part A stay, except for a short list of excluded services specified in section 1888(e)(2)(A)(ii) of the Act. Because CSW services do not appear on this statutory exclusion list, they are included within the global per diem payment that Part A makes to the SNF for the Medicare-covered stay, and the CSW must look to the SNF, rather than to Part B, for payment. Accordingly, we would not make any additional payment under the Part B CSW benefit for services that are furnished to SNF residents during a covered Part A stay, because section 1833(d) of the Act expressly prohibits payment under Part B for any service that is covered under Part A.

Similarly, this proposal would not affect the SNF consolidated billing requirements established by section 4432(b) of the BBA 1997. Under sections 1842(b)(6)(E) and 1862(a)(18) of the Act, a SNF must bill Medicare for both Part A and Part B services that are furnished to its residents, except for those services that the Act specifically excludes, as discussed above. Due to systems constraints in connection with achieving Year 2000 (Y2K) compliance, we have delayed the implementation of SNF consolidated billing with respect to those SNF residents who are not in a covered Part A stay. However, once this aspect of SNF consolidated billing is implemented, Part B bills for Medicare

CSW services furnished to SNF residents during a noncovered stay would have to be submitted by the SNF rather than by the CSW. Exempting CSW services from the SNF consolidated billing provision would require legislation to amend the Act by adding these services to the list of statutory exclusions discussed above.

III. Collection of Information Requirements

This document does not impose any information collection and record keeping requirements subject to the Paperwork Reduction Act of 1995 (PRA). Consequently, it does not need to be reviewed by the Office of Management and Budget (OMB) under the authority of PRA.

IV. Response to Comments

Because of the large number of items of correspondence we normally receive on **Federal Register** documents published for comment, we are not able to acknowledge or respond to them individually. We will consider all comments we receive by the date and time specified in the **DATES** section of this preamble, and, if we proceed with a subsequent document, we will respond to the comments in the preamble to that document.

V. Regulatory Impact Statement

We have examined the impacts of this proposed rule as required by Executive Order (E.O.) 12866 and the Regulatory Flexibility Act (RFA) (Public Law 96–354). E.O. 12866 directs agencies to assess all costs and benefits of available regulatory alternatives and, if regulation is necessary, to select regulatory approaches that maximize net benefits (including potential economic, environmental, public health and safety effects, distributive impacts, and equity). A regulatory impact analysis (RIA) must be prepared for major rules with economically significant effects ($100 million or more annually). We have determined that this proposed rule is not a major rule with economically significant effects. However, we have prepared a voluntary RFA to furnish additional information.

The RFA requires agencies to analyze options for regulatory relief of small businesses. For purposes of the RFA, small entities include small businesses, nonprofit organizations, and governmental agencies. Most hospitals and most other providers and suppliers are small entities, either by nonprofit status or by having revenues of $5 million or less annually. For purposes of the RFA, intermediaries and carriers are not considered to be small entities. Individuals and States are not included in the definition of a small entity. According to estimates provided by the National Association of Social Workers, there were approximately 18,000 clinically trained social workers serving the 1.6 million residents of the nation's 17,000 nursing homes in 1999. Because this proposed rule permits approximately $12 million in annual payments for CSW services that the final rule of April 23, 1998 would have eliminated, this proposed rule would have a significant positive impact on a substantial number of small entitites. This rule would also benefit residents of SNFs who receive mental health services from clinical social workers.

In addition, section 1102(b) of the Act requires us to prepare an RIA if a rule may have a significant impact on the operations of a substantial number of small rural hospitals. This analysis must conform to the provisions of section 603 of the RFA. For purposes of section 1102(b) of the Act, we define a small rural hospital as a hospital that is located outside of a Metropolitan Statistical Area and has fewer than 50 beds. This proposed rule would not have a significant impact on the operations of a substantial number of small rural hospitals.

Section 202 of the Unfunded Mandates Reform Act of 1995 also requires that agencies assess anticipated costs and benefits before issuing any rule that may result in an expenditure in any 1 year by State, local, or tribal governments, in the aggregate, or by the private sector, of $100 million or more. This proposed rule would have no consequential effect on State, local, or tribal governments, and the private sector cost of this rule falls below these thresholds as well.

For these reasons, we are not preparing analyses for either the RFA or section 1102(b) of the Act because we have determined, and we certify, that this rule would not have a significant economic impact on a substantial number of small entities or a significant impact on the operations of a substantial number of small rural hospitals.

In accordance with the provisions of E.O. 12866, this regulation was reviewed by OMB.

We have reviewed this proposed rule under the threshold criteria of E.O. 13132, Federalism. We have determined that the proposed rule would not significantly affect the rights, roles, and responsibilities of States.

List of Subjects in 42 CFR Part 410

Health facilities, Health professions, Kidney diseases, Laboratories, Medicare, Rural areas, X-rays.

For the reasons set forth in the preamble, 42 CFR part 410 is proposed to be amended as set forth below:

PART 410—SUPPLEMENTARY MEDICAL INSURANCE (SMI) BENEFITS

1. The authority citation for part 410 continues to read as follows:

Authority: Secs. 1102 and 1871 of the Social Security Act (42 U.S.C. 1302 and 1395hh).

2. In § 410.73, paragraph (b) introductory text and (b)(2) introductory text are republished, and paragraph (b)(2)(ii) is revised to read as follows:

§ 410.73 Clinical social worker services.

* * * * *

(b) *Covered clinical social worker services.* Medicare Part B covers clinical social worker services.

* * * * *

(2) *Exception.* The following services are not clinical social worker services for purposes of billing Medicare Part B:

* * * * *

(ii) Services furnished by a clinical social worker to an inpatient of a Medicare-participating SNF if the services are required by the requirements for participation for SNFs at §§ 483.15 and 483.45 of this chapter.

* * * * *

(Catalog of Federal Domestic Assistance Program No. 93.773, Medicare—Hospital Insurance; and Program No. 93.774, Medicare—Supplementary Medical Insurance Program)

Dated: February 7, 2000.

Nancy-Ann Min DeParle,

Administrator, Health Care Financing Administration.

Approved: March 27, 2000.

Donna E. Shalala,

Secretary.

Editorial Note: This document was received at the Office of the Federal Register October 13, 2000.

[FR Doc. 00–26737 Filed 10–18–00; 8:45 am]

BILLING CODE 4120–01–P

FEDERAL COMMUNICATIONS COMMISSION

47 CFR Part 73

[MM Docket No. 00–168; FCC 00–345]

Standardized and Enhanced Disclosure of Commercial Television Station Public Interest Obligations

AGENCY: Federal Communications Commission.

ACTION: Proposed rule.

SUMMARY: This document concerns rules and policies on how commercial television broadcast station licensees provide public interest information to the public. This document proposes amendments to the public inspection file rules that would standardize the format used for providing public interest information to the public and make information contained in public inspection files available on the Internet. The intended effect of this action is to propose rules that would make information regarding how television broadcast stations meet their fundamental public interest obligation to serve the needs and interests of their communities of license easier to understand or more accessible to the public.

DATES: Comments must be filed on or before December 18, 2000, and reply comments must be filed on or before January 17, 2001. Written comments by the public on the proposed information collections are due on or before December 18, 2000. Written comments must be submitted by the Office of Management and Budget (OMB) on the proposed information collection(s) on or before December 18, 2000.

ADDRESSES: Address all comments concerning this proposed rule to the Commission's Secretary, Communications Commission, 445 Twelfth Street, SW., Washington DC 20554. In addition to filing comments with the Secretary, a copy of any comments on the information collections contained herein should be submitted to Judy Boley, Federal Communications Commission, Room 1–C804, 445 12th Street, SW., Washington, DC 20554, or via the Internet to *jboley@fcc.gov,* and to Edward C. Springer, OMB Desk Officer, Room 10236 NEOB, 725 17th Street, NW, Washington, DC 20503 or via the Internet to *edward.springer@omb.eop.gov.*

FOR FURTHER INFORMATION CONTACT: Cyndi Thomas, Policy and Rules Division, Mass Media Bureau, at (202) 418–2130, TTY (202) 418–2989. For additional information concerning the information collection(s) contained in this document, contact Judy Boley at 202–418–0214, or via the Internet at *jboley@fcc.gov.*

SUPPLEMENTARY INFORMATION: This is a summary of the *Notice of Proposed Rulemaking* in MM Docket No. 00–168, FCC 00–345, adopted on September 14, 2000, and released on October 5, 2000. The full text of this decision is available for inspection and copying during regular business hours in the FCC Reference Center, 445 Twelfth Street, SW, Room CY–A257, Washington DC, and also may be purchased from the Commission's copy contractor, International Transcription Service, (202) 857–3800, 445 Twelfth Street, SW, Room CY–B402, Washington DC. The complete text is also available under the file name fcc00345.pdf on the Commission's Internet site at *www.fcc.gov.*

This *Notice of Proposed Rulemaking* contains proposed information collection(s) subject to the Paperwork Reduction Act of 1995 (PRA). The general public and other Federal agencies are invited to comment on the proposed information collections contained in this proceeding.

Electronic Access and Filing Addresses

Comments may be filed using the Commission's Electronic Comment Filing System (ECFS) or by filing paper copies via the Internet to *http://www.fcc.gov/e-file/ecfs.html.* Parties may also submit an electronic comment by Internet e-mail. To get filing instructions for e-mail comments, commenters should send an e-mail to *ecfs@fcc.gov,* and should include the following words in the body of the message, ''get form, <your e-mail address>.'' A sample form and directions will be sent in reply.

Paperwork Reduction Act

This *Notice of Proposed Rulemaking* contains a proposed information collection. The Commission, as part of its continuing effort to reduce paperwork burdens, invites the general public and the Office of Management and Budget (OMB) to comment on the information collection(s) contained in this *Notice of Proposed Rulemaking,* as required by the Paperwork Reduction Act of 1995, Public Law 104–13. Public and agency comments are due at the same time as other comments on this *Notice of Proposed Rulemaking;* OMB comments are due 60 days from date of publication of this *Notice of Proposed Rulemaking* in the **Federal Register**. Comments should address (a) whether the proposed collection of information is necessary for the proper performance of the functions of the Commission, including whether the information shall have practical utility; (b) ways to enhance the quality, utility, and clarity of the information collected; (c) ways to minimize the burden of the collection of information on the respondents, including the use of automated collection techniques or other forms of information technology.

OMB Control Number: 3060–XXXX.

Title: Notice of Proposed Rulemaking—Standardized Disclosure Requirements for TV Broadcast Licensee Public Interest Obligations.

Form No.: Undetermined.

Estimated Time Per Response: 52.5–100 hours dependent on final rules.

Total Annual Burden: 86625–165000 hours.

Total Annual Costs: Undetermined.

Needs and Uses: The Commission has proposed in this *Notice of Proposed Rulemaking* to require television broadcast station licensees to use a standardized form to provide information on a quarterly basis on how the station serves the public interest. The information on this standardized form will enhance the public's access to information on how television broadcasters are meeting their public interest obligation.

Synopsis of Notice of Proposed Rulemaking

1. The Commission adopts a *Notice of Proposed Rulemaking* (''*NPRM*'') to address some of the difficulties described in response to the Notice of Inquiry (''*NOI*'') (65 FR 4211, January 26, 2000) in this proceeding, that members of the public have encountered in trying to access information on how television broadcasters are meeting their fundamental public interest obligation to air programming responsive to the needs and interests of its community of license. To meet that obligation in part, under current rules, commercial television broadcast station licensees must provide coverage of issues facing their communities and place lists of programming used in providing significant treatment of those issues (issues/programs lists) in the station's public inspection files on a quarterly basis. The *NPRM* seeks comment on the Commission's tentative conclusion to require television broadcast station licensees to use a standardized form to provide information on a quarterly basis on how the station serves the public interest. The Commission would require that this form be maintained in the station's public inspection file in place of the issues/programs lists. The Commission proposes to enhance the public's ability to access public interest information by requiring licensees to make the contents of their public inspection files, including the form, available on the station's or a state broadcasters association's Internet website. The *NPRM* also seeks comment on the Commission's proposal to encourage, but not mandate the use of station websites to conduct on-line

discussions and facilitate interaction with the public.

2. As the Commission noted in the *NOI*, the discussion of television broadcasters' public interest obligations ''has been renewed by their transition from analog to digital (DTV) technology.'' Some of the issues raised in the *NOI* relate exclusively to broadcasters' use of digital technology. The Commission sought comment generally, however, on ''how broadcasters can meet their public interest obligations on both their analog and digital channels during the transition period, and on various proposals and recommendations that have been made on how broadcasters could better serve their communities of license.'' Television licensees may continue to broadcast in analog format until at least 2006. The mechanisms proposed below do not relate exclusively to digital transmissions. Given the benefits to be derived from the proposals set forth below, the Commission believes it should not wait until after the digital transition is complete to implement them. The Commission recognizes that the application of the proposals in this *NPRM* to analog as well as digital television broadcasters raises the issue of whether we should also consider changes to the disclosure obligations of radio broadcasters. The Commission began this discussion, however, with the *NOI*, which related only to television broadcasters, and is limiting the scope of this proceeding to television.

Standardization of Disclosures

3. The Commission seeks comment on what format a broadcast television licensee should use to provide information to the public regarding how it meets certain public interest obligations. Members of the public currently must contact a station's main studio to review a variety of documents or quarterly reports maintained in the public inspection file that provide information on station operations and management as well as what actions the station has taken to provide community-responsive programming. Station personnel must make the file available to the public at any time during regular business hours and documents must be made available for printing or photocopying upon request made in person. Stations may also maintain all or part of the file in a computer database as long as a computer terminal is made available to the public at the location of the file. Licensees that maintain a station's main studio and public file outside its community of license must provide photocopies of documents to persons within the station's geographic service area by mail upon telephone request.

4. Based upon the comments the Commission received in response to the *NOI*, it appears that members of the public have encountered difficulties accessing information under existing procedures. For example, People for Better TV explains that when its members reviewed public files, ''the most consistent finding is the lack of consistency and uniformity about what is in the files, even within the same community.'' The Commission sought comment in the *NOI* on the recommendation made in the December 18, 1998 report from the President's Advisory Committee on the Public Interest Obligations of Digital Television Broadcasters (Advisory Committee Report) that broadcasters should use a single standardized form to provide information to the public on a station's public interest programming and activities in the community. The Commission also sought comment on the recommendation by People for Better TV and the Advisory Committee Report that broadcasters disclose their public interest programming and activities on a quarterly basis.

5. The Commission tentatively concludes that it should require broadcasters to complete a standardized form that will allow them to disclose how they meet their obligation to serve the public interest. The Commission believes that the use of a standardized disclosure form will facilitate access to information on how licensees are serving the public interest and allow the public to play a more active role in helping a station meet its obligation to provide programming that addresses the community's needs and interests. The Commission further believes that standardized forms will make broadcasters more accountable to the public, and that improving broadcaster accountability will minimize the need for government involvement in monitoring how broadcasters comply with their public interest obligation. The Commission believes standardized disclosure will significantly reduce the time needed to locate information requested by the public and will provide the public with a better mechanism for reviewing a broadcaster's public interest programming and activities. The *NPRM* seeks comment on the Commission's tentative conclusion. The *NPRM* also asks commenters to provide empirical data on any administrative costs or benefits associated with the requirement that broadcasters, especially small broadcasters, provide public interest programming and activity information in a standardized format. Finally, the Commission tentatively concludes that the form be updated on a quarterly basis, and the *NPRM* seeks comment on whether this is the appropriate timeframe.

6. Given that these benefits can be realized today and are not limited to digital broadcasts, the Commission tentatively concludes it should not limit application of this requirement to DTV. The *NPRM* seeks comment on this, as well as on when broadcasters' first quarterly standardized forms must be placed in their public inspection files.

7. While the public inspection file rules will fully apply to analog and DTV broadcasters, the Commission recognizes some overlap in the function of the proposed standardized form and the requirement to maintain issues/programs lists. The Commission tentatively concludes that the proposed standardized public interest disclosure form will replace the requirement that broadcasters maintain issues/programs lists in their public files. The Commission believes that issues/programs lists provide such an assortment of information that the public may have difficulty determining the extent to which the station is serving the public interest. The Commission therefore believes the standardized form as proposed will perform the same intended function as the issues/programs list, while providing better and more easily accessible information on a station's public interest obligations. The *NPRM* seeks comment on this tentative conclusion. The Commission notes that this proceeding does not affect the other requirements of its public inspection file rules, because these requirements are not made redundant by the proposed standardized form.

Types of Disclosures

8. The Commission sought comment in the *NOI* on recommendations made by People for Better TV and the Advisory Committee Report to require licensees to provide specific types of public interest information. The Advisory Committee Report recommends that the enhanced disclosures ''include but not be limited to contributions to political discourse, public service announcements, children's and educational programming, local programming, programming that meets the needs of underserved communities, and community-specific activities.'' People for Better TV advocates requiring broadcasters to ''disclose their public

interest programming and activities * * * matched against ascertained community needs and interests.'' The Commission also sought comment on whether public files should contain information on programming aired with closed captioning and video description. Finally, the Commission asked parties to address the extent to which the Advisory Committee's and People for Better TV's proposals parallel the Commission's previous ascertainment requirements, which the Commission repealed in the 1980s, and it asked parties to address whether its reasons for eliminating those requirements apply to its consideration of these proposals.

9. As noted above, the current issues/programs lists provide such an assortment of information that the public may have difficulty determining the extent to which the station is serving the public interest. The Commission therefore invites further comment on whether the public interest would be better served by requiring television broadcasters to provide information relating to various concrete ways in which they meet certain public interest obligations.

10. *Community-responsive programming.* The Commission tentatively concludes that the standardized form should ask questions about categories of programming. The Commission believes that categorization will serve the goal of this proceeding—to make disclosures about public interest efforts more uniform, easier to understand, and more accessible to the public. The *NPRM* seeks comment on what categories should be included on the standardized form. The Advisory Committee, for example, proposes to include local and national news programming, local and national public affairs programming, programming that meets the needs of underserved communities, programming that contributes to political discourse, other local programming that is not otherwise addressed in the form, and public service announcements. In addition to any defined categories, the Commission proposes to include a ''catch-all'' category to ensure that the form enables broadcasters to reflect any public interest programming they aired that does not fit neatly into one of the defined categories. While the Commission would expect that the scope of defined categories would be commonly understood and that broadcasters could exercise discretion as to which programs belong under which categories, the *NPRM* welcomes comment on any benefits to the public and to broadcasters of defining the proposed programming categories.

11. The proposed form is intended to standardize the format and enhance disclosure of the information broadcasters should already be compiling on their issues/programs lists. Consistent with the current requirement for maintaining issues/programs lists, the Commission therefore would expect that licensees would provide a brief narrative description in each category, including a list of the program titles aired, as well as the time, date, and duration of the programs. The Commission does not believe this will impose a substantial additional burden on broadcasters. The *NPRM* seeks comment on the burden of providing this type of information on a standardized form.

12. *Closed captioning and video description.* In 1998, the Commission adopted a transition period during which television broadcasters must meet certain benchmarks for providing closed captioning for nonexempt video programming. The Commission has also recently adopted rules for providing video description of programming for the benefit of persons with visual disabilities. The Commission sought comment in the *NOI* on whether the public file should contain information on programming aired with closed captioning and video description. One commenter states that the Commission ''previously rejected requests to adopt recordkeeping or reporting requirements with respect to closed captioning.'' Another commenter asserts that consumers who rely on captions have become increasingly frustrated with the lack of information about which programs are closed captioned. The Commission tentatively concludes that the standardized disclosure form should include information on broadcasters' provision of closed captioning and video description. The *NPRM* seeks comment on this approach and on what specific information should be provided.

13. *Identifying community needs and interests.* The Advisory Committee recommends including information on the efforts licensees take to identify the programming needs of various segments of their communities. In the *NOI*, the Commission sought comment on the extent to which the Advisory Committee's and People for Better TV's proposals parallel the Commission's previous ascertainment requirements, which the Commission repealed in the 1980s. The Commission also asked parties to address whether the Commission's reasons for eliminating its formal ascertainment requirements apply to its consideration of these proposals.

14. The *NPRM* invites further comment on whether licensees should provide a narrative description on the standardized form of the actions taken, in the normal course of business, to assess a community's programming needs and interests. The Commission believes this requirement would differ from the former ascertainment requirements, which included detailed methodologies for ascertaining the problems, needs and interests of the public within the station's service area. Licensees were required to provide demographic information on a station's community of license, conduct interviews with community leaders and members of the general public to ascertain the community's needs and interests, and provide programming responsive to those ascertained needs and interests.

15. In contrast to these formal and detailed requirements, under the Commission's proposal licensees would only provide the public with information on how, in the normal course of business, they assess community needs and interests. The Commission agrees with one commenter that repeal of the formal ascertainment requirements was not intended to alter a broadcaster's obligation to meet community needs. The Commission recognizes that in adopting the requirement to provide quarterly issues/programs lists, the Commission determined that it was not concerned with how a broadcaster became aware of community issues so long as the issues were identified and adequate responsive programming was offered or proposed. As a result, the Commission eliminated the requirement to include in the issues/programs list a description or explanation of the means by which a licensee determined any given issue as one facing its community. The Commission notes the concerns expressed, however, by another commenter, for example, that broadcasters ''ignore certain communities.'' The Commission also recognizes that disclosure to a community of how local broadcasters identify its needs will promote the kind of dialogue between broadcasters and communities intended by its rules without the need for government intervention. The *NPRM* seeks comment on the benefits and burdens of these proposals.

16. *Community service activities.* The Advisory Committee recommends including on the form a description of a licensee's ''community service programs, community outreach, or other

similar non-broadcast activities directed to serving the community of license.'' One commenter describes local broadcasters as providing important support for fundraising and awareness campaigns for community organizations such as hospitals and homeless and domestic violence shelters; supporting and organizing community events such as blood drives and food as well as clothing drives for the needy; and promoting and organizing awareness campaigns covering the full range of issues confronting communities today, including AIDS awareness and prevention, alcohol abuse, and public safety. The *NPRM* seeks comment on whether these types of activities should be considered in assessing whether a licensee has served the public interest under the Communications Act and whether they should be listed on an attachment to the standardized form.

Access to Public Interest Information

17. In addition to standardizing the information currently required on a station's community-responsive programming, the *NPRM* proposes to enhance the public's access to public interest information by requiring broadcast television licensees to maintain a hard copy of the standardized form in their public inspection files and to make a station's public inspection file, including the form, available on the Internet. The *NPRM* seeks comment on this proposal and on whether licensees should forward an electronic copy of the disclosure form to the Commission for inclusion in the license file.

18. *Public inspection file.* Consistent with the current requirements for issues/programs lists, the Commission tentatively concludes that licensees must place a paper copy of the standardized disclosure form and attachments in their public inspection files each quarter and retain those forms until final action on the next renewal application. The *NPRM* seeks comment on this tentative conclusion.

19. *Websites.* The Commission currently allows licensees to maintain their public inspection file in computer databases. Stations that maintain all or part of the file in a computer database must also make a computer terminal available to the public at the location of the file. The Commission also encourages licensees to post their electronic file on any websites they maintain. In the *NOI*, the Commission asked for information on how many broadcasters provide their public file in electronic format, and the costs and benefits of doing so. The Commission did not receive any specific information in response to these questions. The Commission also sought comment on whether broadcasters should be required to make their public files available on the Internet.

20. The Commission tentatively concludes that each licensee must, each quarter, post the proposed standardized form and the other contents of its public inspection file on its website or its state broadcasters association's website. The Commission believes that converting the public inspection file into an electronic format and placing it and the standardized form on a website will not be unduly burdensome. Making the information available on the Internet will provide 24-hour access to it and, therefore, greatly increase public access to information on actions a station has taken to meet its public interest obligation. In contrast, the public currently only has access to public inspection files during a main studio's regular business hours. To the extent individuals do not have access to the Internet or do not want to access the information over the Internet, however, they still have the option of contacting the station's main studio. The *NPRM* seeks comment on this tentative conclusion. The *NPRM* asks commenters to provide detailed information on the cost of requiring stations that do not already maintain a website to do so. The *NPRM* also seeks comment on whether state broadcasters associations' websites are appropriate vehicles for posting the disclosure forms and public files and what costs may be involved. The *NPRM* also seeks comment on its tentative conclusion that broadcasters must maintain the disclosure forms on the website until final action has been taken on the station's next renewal license.

21. *Access to persons with disabilities.* In the *NOI*, the Commission sought comment on how websites could be made accessible to persons with disabilities. Commenters urge the Commission to ensure that broadcasters design and maintain their websites in a manner that meets the World Wide Web Consortium's Web Accessibility Initiative (W3C/WAI) guidelines. The guidelines, as well as extensive information on the guidelines, can be accessed at *http://www.w3.org/WAI.* The *NPRM* seeks comment on whether the Commission should require or encourage television broadcasters to design new or make existing websites on which they post the proposed form and public file accessible to persons with disabilities using the W3C/WAI guidelines. The *NPRM* also seeks comment on other ways in which broadcasters could make the disclosure form accessible over the Internet to persons with disabilities.

22. *Electronic filing of the Standardized Form with the Commission.* The Commission is not inclined, at this time, to require licensees to file the proposed standardized form electronically with the Commission. While licensees must maintain certain material in a station's public inspection file, they are generally not required to file such information or reports with the Commission. One commenter proposes that broadcasters should be required to file public interest reports electronically with the Commission and that the Commission should post a link to the filed reports on its own website. The Commission believes that its tentative conclusion to require licensees to make disclosure forms available on individual websites will afford both the Commission and the public adequate access to public interest information. The Commission recognizes that this approach differs from that taken in the children's television context, and seeks comment on whether the proposed standardized public interest disclosure forms should receive different treatment.

23. *Other methods for distributing public interest information to the public.* Commenters also provide other suggestions for how licensees might make public interest information available to the public, including on-air notifications and providing public interest information in newspapers and local-programming guides. The Commission proposes not to make any of these methods of distribution mandatory, but again encourages television broadcasters to provide information to the public under any of these proposals. The *NPRM* seeks comment on this approach.

24. *Licensee interaction with the public through Internet websites.* While licensees may already interact with the public through telephone calls and visits in person to assess a community's programming needs and interests, the Commission sought comment in the *NOI* on whether it should require licensees to use Internet websites to ensure that they are responsive to the needs of the public. The Commission believes licensees could make very effective use of the Internet to maintain a continuous dialogue with their communities. At this time, however, the Commission is inclined not to mandate interaction with the public through Internet websites, but to encourage broadcasters to use their websites to conduct discussions with members of the public. The *NPRM* seeks comment on this approach.

Administrative Matters

25. *Comments and Reply Comments.* Pursuant to Sections 1.415 and 1.419 of the Commission's rules, 47 CFR 1.415, 1.419, interested parties may file comments on or before December 18, 2000, and reply comments on or before January 17, 2001. Comments may be filed using the Commission's Electronic Filing System (ECFS) or by filing paper copies. See Electronic Filing of Documents in Rulemaking Proceedings, 63 FR 24121, May 1, 1998.

26. Comments filed through the ECFS can be sent as an electronic file via the Internet to *http://www.fcc.gov/e-file/ecfs.html.* Generally, only one copy of an electronic submission must be filed. If multiple docket or rulemaking numbers appear in the caption of this proceeding, however, commenters must transmit one electronic copy of the comments to each docket or rulemaking number referenced in the caption. In completing the transmittal screen, commenters should include their full name, postal service mailing address, and the applicable docket or rulemaking number. Parties may also submit an electronic comment by Internet e-mail. To get filing instructions for e-mail comments, commenters should send an e-mail to *ecfs@fcc.gov,* and should include the following words in the body of the message, ''get form, <your e-mail address>.'' A sample form and directions will be sent in reply.

27. Parties who choose to file by paper should also submit comments on diskette. These diskettes should be submitted to: Wanda Hardy, 445 Twelfth Street, S.W., Room 2–C221, Washington, D.C. 20554. Such a submission should be on a 3.5 inch diskette formatted in an IBM compatible format using WORD 97 or compatible software. The diskette should be accompanied by a cover letter and should be submitted in ''read only'' mode. The diskette should be clearly labeled with the commenter's name, proceeding (including the docket number (MM Docket No. 00–168)), type of pleading (comment or reply comment), date of submission, and the name of the electronic file on the diskette. The label should also include the following phrase: ''Disk Copy—Not an Original.'' Each diskette should contain only one party's pleadings, preferably in a single electronic file. In addition, commenters must send diskette copies to the Commission's copy contractor, International Transcription Service, Inc., 445 Twelfth Street, S.W., Room CY–B402, Washington, D.C. 20554.

28. *Ex Parte Rules.* This proceeding will be treated as a ''permit-but-disclose'' proceeding, subject to the ''permit-but-disclose'' requirements under Section 1.1206(b) of the rules, 47 CFR 1.1206(b), as revised. *Ex parte* presentations are permissible if disclosed in accordance with Commission rules, except during the Sunshine Agenda period when presentations, *ex parte* or otherwise, are generally prohibited. Persons making oral *ex parte* presentations are reminded that a memorandum summarizing a presentation must contain a summary of the substance of the presentation and not merely a listing of the subjects discussed. More than a one or two sentence description or the views and arguments presented is generally required. 47 CFR 1.1206(b)(2), as revised. Additional rules pertaining to oral and written presentations are set forth in Section 1.1206(b) of the Commission's rules.

29. *Initial Regulatory Flexibility Analysis.* An Initial Regulatory Flexibility Analysis (IRFA) is contained in Appendix B of the *NPRM.* As required by Section 603 of the Regulatory Flexibility Act, 5 U.S.C. 603, the Commission has prepared an IRFA of the expected impact on small entities of the proposals contained in this *NPRM.* Written public comments are requested on the IRFA. To fulfill the mandate of the Contract with America Advancement Act of 1996 regarding the Final Regulatory Flexibility Analysis, the Commission asks a number of questions in its IRFA regarding the prevalence of small business in the television broadcasting industry. Comments on the IRFA must be filed in accordance with the same filing deadlines as comments on the *NPRM*, but they must have a distinct heading designating them as responses to the IRFA. The Commission's Reference Information Center, Consumer Information Bureau, will send a copy of this *NPRM*, including the IRFA, to the Chief Counsel for Advocacy of the Small Business Administration in accordance with Section 603(a) of the Regulatory Flexibility Act, Public Law 96–354, 94 Stat. 1164, 5 U.S.C. 601 *et seq.* (1981), as amended.

30. *Initial Paperwork Reduction Act Analysis.* This *NPRM* may contain either proposed or modified information collections. As part of our continuing effort to reduce paperwork burdens, the Commission invites the public to take this opportunity to comment on the information collections contained in this *NPRM*, as required by the Paperwork Reduction Act of 1996. Public and agency comments are due at the same time as other comments on the *NPRM.* Comments should address: (a) Whether the proposed collection of information is necessary for the proper performance of the functions of the Commission, including whether the information shall have practical utility; (b) ways to enhance the quality, utility, and clarity of the information collected; (c) ways to minimize the burden of the collection of information on the respondents, including the use of automated collection techniques or other forms of information technology. In addition to filing comments with the Secretary, a copy of any comments on the information collections contained in this *NPRM* should be submitted to Judy Boley, Federal Communications Commission, 445 Twelfth Street, S.W., Room 1–C804, Washington, D.C. 20554, or over the Internet to *jboley@fcc.gov* and to Edward Springer, OMB Desk Officer, 10236 NEOB, 725 17th Street, N.W., Washington, D.C. 20503 or over the Internet to *edward.springer@omb.eop.gov.*

31. *Additional Information.* For additional information on this proceeding, please contact Cyndi Thomas, Legal Branch, Policy and Rules Division, Mass Media Bureau, (202) 418–2130.

Initial Regulatory Flexibility Analysis

As required by the Regulatory Flexibility Act (RFA), the Commission has prepared this Initial Regulatory Flexibility Analysis (IRFA) of the possible significant economic impact on small entities by the policies and rules proposed in this *Notice of Proposed Rulemaking* (''*NPRM*''). Written public comments are requested on this IRFA. Comments must be identified as responses to the IRFA and must be filed by the deadlines for comments as provided in the *NPRM.* The Commission will send a copy of the *NPRM*, including this IRFA, to the Chief Counsel for Advocacy of the Small Business Administration (SBA). In addition, the NRPM and IRFA (or summaries thereof) will be published in the **Federal Register**.

Need for and Objectives of the Proposed Rules

On December 20, 1999, the Commission released a *Notice of Inquiry* (''*NOI*'') seeking comment on several issues related to how broadcasters might best serve the public interest during and after the transition from analog to digital television (DTV). One of a television broadcaster's fundamental public interest obligations is to air programming responsive to the needs and interests of its community of

license. As part of this obligation, commercial television broadcast station licensees must currently provide coverage of issues facing their communities and place lists of programming used in providing significant treatment of those issues (issues/programs lists) in the station's public inspection files on a quarterly basis. The record developed in response to the *NOI*, however, provides information on the ''lack of consistency and uniformity'' in accessing information in a station's public inspection files.

The Commission is now proposing to require analog and DTV broadcast station licensees to use a standardized form to provide certain information on how stations serve the public interest. The form would be provided on a quarterly basis and maintained in the station's public inspection file in place of the issues/programs lists. The Commission is also proposing to require that licensees make the contents of their public inspection files, including the standardized form, available on the station's or a state broadcasters association's Internet website. The Commission believes that making information, regarding how a television broadcast station serves the public interest easier to understand and more accessible will promote discussion between the licensee and its community, lessening the need for government involvement in ensuring that a station is meeting its public interest obligation.

Legal Basis

Authority for the actions proposed in this *NPRM* may be found in Sections 4(i), 303, 307, 309, and 336 of the Communications Act of 1934, as amended, 47 U.S.C. 154(i), 303, 307, 309, and 336, and Sections 1.412, 1.413, and 1.415 of the Commission's rules, 47 CFR 1.412, 1.413, and 1.415.

Description and Estimate of the Number of Small Entities to Which the Proposed Rules Will Apply

The RFA directs agencies to provide a description of, and, where feasible, an estimate of the number of small entities that may be affected by the proposed rules, if adopted. The RFA defines the term ''small entity'' as having the same meaning as the terms ''small business,'' ''small organization,'' and ''small governmental jurisdiction.'' In addition, the term ''small business'' has the same meaning as the term ''small business concern'' under Section 3 of the Small Business Act. A small business concern is one which: (1) Is independently owned and operated; (2) is not dominant in its field of operation; and (3) satisfies any additional criteria established by the SBA.

The statutory definition of a small business applies ''unless an agency after consultation with the Office of Advocacy of the SBA and after opportunity for public comment, establishes such definition(s) in the **Federal Register**. A ''small organization'' is generally ''any not-for-profit enterprise which is independently owned and operated and is not dominant in its field''. Nationwide, as of 1992, there were approximately 275,801 small organizations.

The SBA defines a television broadcasting station that has $10.5 million or less in annual receipts as a small business. A television broadcasting station is an establishment primarily engaged in broadcasting visual programs to the public, except cable and other pay television stations. Included in this industry are commercial, religious, educational, and other television stations. According to Commission staff review of the BIA Publications, Inc., Master Access Television Analyzer Database on July 11, 2000, fewer than 800 commercial television broadcast stations (65%) subject to our proposal have revenues of less than $10.5 million. We note, however, that under SBA's definition, revenues of affiliates that are not television stations should be aggregated with the television station revenues in determining whether a concern is small. Our estimate, therefore, may overstate the number of small entities because the revenue figure on which it is based does not include or aggregate revenues from non-television affiliated companies. It would appear that there would be no more than 800 entities affected.

Description of Projected Reporting, Recordkeeping, and Other Compliance Requirements

Licensees must currently maintain in their station's public inspection files quarterly issues/programs lists, records that substantiate certification of compliance with the commercial limits on children's programming and quarterly Children's Television Programming Reports (FCC Form 398). Television and radio broadcast station licensees must also maintain information in their public inspection files on applications, authorizations, citizens agreements, service contour maps, ownership reports, annual employment reports, written correspondence with the public on station operations, material related to Commission investigations or complaints, and certification that the licensee is complying with its requirements for local public notice announcements. In addition, broadcast licensees must maintain a separate file within the public inspection file concerning requests by political candidates for broadcast time on the station.

The Commission is proposing to standardize and enhance disclosure of information from these public inspection files. Specifically, the Commission proposes to replace the issues/programs list with a standardized form and to require broadcasters to indicate their compliance with closed captioning and video description requirements as well as describe how, in the normal course of business, they assess community needs and interests. In addition, the Commission proposes to require broadcasters to make their public inspection files, including the forms, available on the Internet. This endeavor would not require broadcasters to collect any new information. Rather, the proposals would require television broadcasters to provide public interest information in a new format—on a standardized form as well as on the Internet. The proposals would require the same reporting, recordkeeping, and other compliance requirements for small television station broadcasters as large broadcasters. The *NPRM* seeks comment on these issues, including comment specifically directed toward the possible effects of the requirements on small entities.

Steps Taken To Minimize Significant Economic Impact on Small Entities, and Significant Alternatives Considered

The RFA requires an agency to describe any significant alternatives that it has considered in reaching its proposed approach, which may include the following four alternatives (among others): (1) The establishment of differing compliance or reporting requirements or timetables that take into account the resources available to small entities; (2) the clarification, consolidation, or simplification of compliance or reporting requirements under the rule for small entities; (3) the use of performance, rather than design, standards; and (4) an exemption from coverage of the rule, or any part thereof, for small entities.

The *NPRM* requests comment on the Commission's tentative conclusion to replace the issues/programs list with a standardized form. An alternative to the proposed use of a standardized form would be to leave the issues/programs list as it currently exists. Based on comments to the *NOI,* however, we believe that a standardized disclosure

would simplify the process of providing requested information. This simplification would significantly reduce the time licensees, including small broadcast television station licensees, need to locate information requested by the public. The *NPRM* specifically asks for cost information associated with the requirement that broadcasters, especially small broadcasters, provide public interest information in a standardized format.

By definition, the standardized disclosure form would ask questions about defined categories of programming. Accordingly, the *NPRM* seeks comment on what categories should be included on the form. While categories should be defined, the Commission believes it is not necessary to define what type of programming would fall within any category, leaving it to the broadcasters' discretion to determine which programs belong under which categories. The *NPRM* also seeks comment on the Commission's tentative view only to require that licensees certify on the standardized form compliance with the minimum requirements for closed captioning and video description.

The *NPRM* invites further comment on whether licensees should provide a narrative description on the standardized form of the actions taken, in the normal course of business, to assess a community's programming needs and interests. This requirement would be much less burdensome than the Commission's former ascertainment requirements, which included detailed methodologies for ascertaining the problems, needs and interests of the public within the station's service area. Finally, the *NPRM* seeks comment on whether a licensee's activities in its community, including supporting and organizing community events and promoting and organizing awareness campaigns, should be considered in assessing whether a licensee has served the public interest under the Communications Act and whether they should be listed on an attachment to the standardized form. The alternative to this requirement would be to leave the rule as is. Based on our experience and the comments to the *NOI,* we believe that it serves an important public interest to make the information available in a clear and easy to understand format.

The *NPRM* also requests comment on the Commission's tentative conclusion to require licensees each quarter to place a paper copy of the standardized form in their public inspection files and to make their public inspection files, including the standardized forms, available on the Internet until final action has been taken on the station's next renewal license. As an alternative to posting the information on each station's website, the Commission has proposed allowing licensees to make the public inspection file available on state broadcasters associations' websites. The Commission has asked for cost information on creating new websites as well as using a licensee's state broadcasters association's website. The *NPRM* seeks comment on whether television broadcasters should be encouraged or required to make websites on which they post the proposed form and public file accessible to persons with disabilities and proposes not to require licensees to file the proposed form with the Commission. One alternative that the Commission considered was a requirement to mandate this type of interaction with the public. As the *NPRM* states, however, the Commission is disinclined to mandate interaction with the public through Internet websites, but encourages broadcasters to use their websites to conduct discussions with members of the public. The Commission is seeking comment on these proposed alternatives so as to minimize the effect of the proposed rules on small businesses.

Federal Rules That May Duplicate, Overlap, or Conflict With the Proposed Rules

None.

Ordering Clauses

32. This *Notice of Proposed Rulemaking* is issued pursuant to the authority contained in Sections 4(i), 303, 307, 309, and 336 of the Communications Act of 1934, as amended, 47 U.S.C. 154(i), 303, 307, 309, and 336, and Sections 1.412, 1.413, and 1.415 of the Commission's rules, 47 CFR 1.412, 1.413, and 1.415.

33. The Commission's Consumer Information Bureau, Reference Information Center, *shall send* a copy of this *NPRM,* including the Initial Regulatory Flexibility Analysis, to the Chief Counsel for Advocacy of the Small Business Administration.

List of Subjects in 47 CFR Part 73

Television broadcasting.

Federal Communications Commission.

Magalie Roman Salas,

Secretary.

[FR Doc. 00–26785 Filed 10–18–00; 8:45 am]

BILLING CODE 6712–01–P

DEPARTMENT OF THE INTERIOR

Fish and Wildlife Service

50 CFR Part 17

RIN 1018–AG32

Endangered and Threatened Wildlife and Plants; Extending of Comment Period on Proposed Determination of Critical Habitat for the California Red-Legged Frog *(Rana aurora draytonii).*

AGENCY: Fish and Wildlife Service, Interior.

ACTION: Proposed rule; reopening of comment period.

SUMMARY: The U.S. Fish and Wildlife Service (Service) gives notice of the extension of the comment period on the proposed rule to designate critical habitat for the California Red-Legged Frog *(Rana aurora draytonii).* The extension of the comment period will be for 30 additional days. The extension of the comment period will allow all interested parties to submit written comments on the proposal. We are seeking comments or suggestions from the public, other concerned governmental agencies, the scientific community, industry, or any other interested parties concerning the proposed rule. Comments already submitted on the proposed rule need not be resubmitted as they will be fully considered in the final determination.

DATES: The comment period for this proposal now closes on November 20, 2000. Any comments received by the closing date will be considered in the final decision on this proposal.

ADDRESSES: Comments and materials concerning this proposal should be sent to the Field Supervisor, Sacramento Fish and Wildlife Office, U.S. Fish and Wildlife Service, 2800 Cottage Way, Suite W–2605, Sacramento, California 95825. Comments and materials received will be available for public inspection, by appointment, during normal business hours at the above address.

If you wish to comment, you may submit your comments and materials concerning this proposal by any one of several methods.

1. You may submit written comments and information to the Field Supervisor, Sacramento Fish and Wildlife Office, U.S. Fish and Wildlife Service, 2800 Cottage Way, Suite W–2605, Sacramento, California 95825.

2. You may also send comments by electronic mail (e-mail) to fw1crfch@fws.gov. See the Public Comments Solicited section below for

file format and other information about electronic filing.

3. You may hand-deliver comments to our Sacramento Fish and Wildlife Office, U.S. Fish and Wildlife Service, 2800 Cottage Way, Suite W. 2605, Sacramento, California 95825.

FOR FURTHER INFORMATION CONTACT: Curt McCasland or Stephanie Brady, at the above address, phone 916–414–6600, facsimile 916–414–6710.

For information about Monterey, Los Angeles, San Benito, San Luis Obispo, Santa Barbara, Santa Cruz, and Ventura counties, contact Diane Noda, Ventura Fish and Wildlife Office, U.S. Fish and Wildlife Service, 2394 Portola Road, Suite B, Ventura, California 93003 (telephone 805/644–1766; facsimile 805/644–3958).

For information about areas in the San Gabriel Mountains of Los Angeles County or Riverside and San Diego counties, contact Ken Berg, Carlsbad Fish and Wildlife Office, U.S. Fish and Wildlife Service, 2730 Loker Avenue West, Carlsbad, California 92008 (telephone 760/431–9440; facsimile 760/431–9624).

SUPPLEMENTARY INFORMATION: Comments from the public regarding the accuracy of this proposed rule are sought, especially regarding:

(1) The reasons why any habitat should or should not be determined to be critical habitat for California red-legged frogs as provided by section 4 of the Act, including whether the benefits of designation will outweigh any benefits of exclusion;

(2) Specific information on the distribution of California red-legged frogs, the amount and distribution of the species' habitat, and what habitat is essential to the conservation of the species, and why;

(3) Land use practices and current or planned activities in the subject areas and their possible impacts on proposed critical habitat;

(4) Any foreseeable economic or other impacts resulting from the proposed designation of critical habitat, including, in particular, any impacts on small entities or families; and

(5) Economic and other values associated with designating critical habitat for California red-legged frogs, such as those derived from nonconsumptive uses (e.g., hiking, camping, bird-watching, enhanced watershed protection, improved air quality, increased soil retention, ''existence values'', and reductions in administrative costs).

Background

On September 11, 2000, the Service published a proposed rule to designate critical habitat for the California Red-legged frog in the **Federal Register** (65 FR 54892). The original comment period closed on October 11, 2000. The comment period now closes on November 20, 2000. Written comments should be submitted to the Service (see **ADDRESSES** section).

Approximately 2,175,000 hectares (5,373,650 acres) of land fall within the boundaries of the proposed critical habitat designation. Specifically, aquatic and upland areas where suitable breeding and nonbreeding habitat is interspersed throughout the landscape and is interconnected by unfragmented dispersal habitat are areas proposed as critical habitat. Proposed critical habitat is located in Alameda, Butte, Calaveras, Contra Costa, El Dorado, Fresno, Kern, Los Angeles, Marin, Mariposa, Merced, Monterey, Napa, Plumas, Riverside, San Benito, San Diego, San Joaquin, San Luis Obispo, San Mateo, Santa Barbara, Santa Clara, Santa Cruz, Sierra, Solano, Sonoma, Stanislaus, Tehama, Tuolumne, Ventura, and Yuba counties, California. Critical habitat receives protection from destruction or adverse modification through required consultation under section 7 of the Act with regard to actions carried out, funded, or authorized by a Federal agency. Section 4 of the Act requires us to consider economic and other relevant impacts when specifying any particular area as critical habitat.

The comment period on this proposal now closes on November 20, 2000. Written comments should be submitted to the Service office listed in the **ADDRESSES** section.

Author: The primary authors of this notice are Curt McCasland and Stephanie Brady (see **ADDRESSES** section).

Authority: The authority for this action is the Endangered Species Act of 1973 (16 U.S.C. 1531 *et seq.*).

Dated: October 12, 2000.

Elizabeth H. Stevens,

Acting Manager.

[FR Doc. 00–26704 Filed 10–18–00; 8:45 am]

BILLING CODE 4310–55–P

DEPARTMENT OF THE INTERIOR

Fish and Wildlife Service

50 CFR Part 17

RIN 1018–AG17

Endangered and Threatened Wildlife and Plants; Reopening of Comment Period and Notice of Availability of Draft Economic Analysis on Proposed Critical Habitat Determination for the Peninsular Bighorn Sheep. Notice of Availability of Peninsular Bighorn Sheep Distribution Map

AGENCY: Fish and Wildlife Service, Interior.

ACTION: Proposed rule; reopening of comment period and notice of availability of draft economic analysis and notice of availability of Peninsular bighorn sheep distribution map.

SUMMARY: The U.S. Fish and Wildlife Service (Service) announces the availability of a draft economic analysis for the proposed designation of critical habitat for the Peninsular bighorn sheep *(Ovis canadensis)*. We also provide notice of the reopening of the comment period for the proposal to designate critical habitat for the Peninsular bighorn sheep to allow all interested parties to submit written comments on the proposed rule and on the draft economic analysis. Comments previously submitted need not be resubmitted as they will be incorporated into the public record as a part of this reopening and will be fully considered in the final rule. We also provide notice of the availability of distribution map for the Peninsular bighorn sheep.

DATES: The original comment period on the critical habitat proposal closed on August 31, 2000. The comment period is again reopened and we will accept comments until November 20, 2000. Comments must be received by the closing date. Any comments that are received after the closing date may not be considered in the final decision on this proposal.

ADDRESSES: Copies of the draft economic analysis are available on the Internet at ''http://pacific.fws.gov/crithab/pbsh'' or by writing to the Field Supervisor, U.S. Fish and Wildlife Service, Carlsbad Fish and Wildlife Office, 2730 Loker Avenue West, Carlsbad, California, 92008. Written comments should be sent to the Field Supervisor. You may also send comments by electronic mail (e-mail) to *fw1pbsh@fws.gov*. Please submit comments in ASCII file format and avoid the use of special characters and

encryption. Please include ''Attn: RIN 1018–AG17'' and your name and return address in your e-mail message. Comments and materials received will be available for public inspection, by appointment, during normal business hours at the above Service address. Copies of the distribution map for the Peninsular bighorn sheep are available by contacting the Carlsbad Fish and Wildlife Office or by appointment during normal business hours.

FOR FURTHER INFORMATION CONTACT: The Carlsbad Fish and Wildlife Office, at the above address (telephone 760–431–9440; facsimile 760–431–9618).

SUPPLEMENTARY INFORMATION:

Background

Bighorn sheep *(Ovis canadensis)* are found along the Peninsular Mountain Ranges from the San Jacinto Mountains of southern California south into the Volcan Tres Virgenes Mountains near Santa Rosalia, Baja California, Mexico, a total distance of approximately 800 kilometers (km) (500 miles (mi)). The Peninsular bighorn sheep is similar in appearance to other desert bighorn sheep. The coat is pale brown, and the permanent horns, which become rough and scarred with age, vary in color from yellowish-brown to dark brown. The Peninsular bighorn sheep occurs on steep, open slopes, canyons, and washes in hot and dry desert regions where the land is rough, rocky, and sparsely vegetated. Most of these sheep live between 91 and 1,219 meters (m) (300 and 4,000 feet (ft)) in elevation, where average annual precipitation is less than 10 centimeters (cm) (4 inches (in)) and daily high temperatures average 104° Fahrenheit in the summer. Alluvial fans (sloping masses of gravel, sand, clay, and other sediments that widen out like fans at the base of canyons and washes) are used for breeding, feeding, and movement. Peninsular bighorn sheep use a wide variety of plant species as their food source. Peninsular bighorn sheep typically produce only one lamb per year. Bighorn ewes exhibit a high degree of site fidelity to their home range; this behavior is learned by their offspring. From May through October, Peninsular bighorn sheep are typically more localized in distribution around permanent water sources.

The decline of the Peninsular bighorn sheep is attributed to a combination of factors, including: (1) Relatively low adult survivorship from predation and human-related causes; (2) the effects of disease and parasitism; (3) low lamb recruitment; and (4) habitat loss, degradation, and fragmentation. The Peninsular bighorn sheep in the United States declined from an estimated 1,171 individuals in 1971 to about 570 individuals in 1991 (Bleich *et al.* 1992). Recent estimates now number the population at approximately 335 adults in about eight ewe groups in the wild in the United States. The habitat still remaining for the Peninsular bighorn sheep in the United States is managed by the California Department of Parks and Recreation, California Department of Fish and Game, Bureau of Land Management, private landowners, Trust lands, U.S. Forest Service, and other State and local entities.

Section 4(b)(2) of the Act requires that the Secretary shall designate or revise critical habitat based upon the best scientific data available and after taking into consideration the economic impact of specifying any particular area as critical habitat. Based upon the previously published proposal to designate critical habitat for the Peninsular bighorn sheep and comments received during previous comment period, we have conducted a draft economic analysis of the proposed critical habitat designation. The draft economic analysis is available at the above Internet and mailing address (see **ADDRESSES** section). To accept the best and most current scientific data regarding the critical habitat proposal and the draft economic analysis of the proposal, we reopen the comment period at this time. Previously submitted oral or written comments on this critical habitat proposal need not be resubmitted. The current comment period on this proposal closes on November 20, 2000. Written comments may be submitted to the Service office in the **ADDRESSES** section.

The distribution map for Peninsular bighorn sheep represents a recent compilation of data from numerous sources that depicts the distributional range of bighorn sheep in the Peninsular Ranges of southern California. The mapped information was compiled through an interagency recovery planning program. The map is being made available to provide the public with additional information on the biology of the Peninsular bighorn sheep.

Author

The primary author of this notice is the Carlsbad Fish and Wildlife Office (see **ADDRESSES** section).

Authority

The authority for this action is the Endangered Species Act of 1973 (16 U.S.C. 1531 *et seq.*).

Dated: October 11, 2000.

Anne Badgley,

Regional Director, Region 1.

[FR Doc. 00–26877 Filed 10–18–00; 8:45 am]

BILLING CODE 4310–55–U

DEPARTMENT OF COMMERCE

National Oceanic and Atmospheric Administration

50 CFR Part 660

[Docket No. 001012284–0284–01; I.D. 092100B]

RIN 0648–AO50

Fisheries off West Coast States and in the Western Pacific; Western Pacific Pelagic Fisheries; American Samoa; Control Date

AGENCY: National Marine Fisheries Service (NMFS), National Oceanic and Atmospheric Administration (NOAA), Commerce.

ACTION: Advance notice of proposed rulemaking; request for comments.

SUMMARY: NMFS announces that persons who enter the pelagic longline fishery in the exclusive economic zone around American Samoa after July 15, 2000 (''control date'') are not guaranteed future participation in the fishery if the Western Pacific Fishery Management Council (Council) prepares and NMFS approves a program limiting entry or effort. This action does not commit the Council or NMFS to limit effort or to prevent any other date from being selected for eligibility to participate in the American Samoa pelagic fishery. The Council or NMFS also may use other criteria to limit fishing effort or participation in a limited entry program if one is developed in the future.

DATES: Comments must be submitted in writing by November 20, 2000.

ADDRESSES: Comments may be mailed to Dr. Charles Karnella, Administrator, NMFS, Pacific Islands Area Office (PIAO), 1601 Kapiolani Blvd., Suite 1110, Honolulu, HI 96814–4700; or faxed to 808-973-2941. Comments will not be accepted if submitted via e-mail or Internet.

FOR FURTHER INFORMATION CONTACT: Alvin Katekaru, Fishery Management Specialist, PIAO, 808-973-2937.

SUPPLEMENTARY INFORMATION: Since 1996, the pelagic fishery around American Samoa has undergone a change from essentially a troll fishery to a commercial, small-scale longline fishery. Currently, the pelagic longline fishery consists mostly of ''alias'' (small catamarans), about 30 ft (9.1 m) long

and powered by gasoline outboard engines, that use monofilament longline gear to target albacore tuna. In 1996, 13 alias landed 232,721 lbs (105.56 mt) of albacore. At present about 25 alias are actively engaged in the fishery; however, 63 alias are registered with longline general permits. As for large fishing vessels, in 1997 the fishery consisted of four longliners ranging in length from 65 to 109 ft (19.8 to 33.2 m); today there are 15 large longline vessels in the American Samoa pelagic fishery.

In response to the influx of large longliners into American Samoa's pelagic fishery and the potential for conflict between the large vessels and small alias, the Council established November 13, 1997, as a control date to further restrict the participation of large fishing vessels in the fishery, if the Council decided to limit entry or effort, by establishing area closures to large fishing vessels (63 FR 3532, January 23, 1998). At its meeting in June 2000, the Council voted to: (1) establish 50-nm fishing area closures around the islands of American Samoa to commercial fishing vessels larger than 50 ft (15.2 m) in length targeting pelagic management unit species, (2) allow vessels registered for use with a Federal general longline permit and a documented landing of pelagic management unit species, prior to the control date of November 13, 1997, to use longline gear within a 50-nm area closure around American Samoa, and (3) establish a new control date of July 15, 2000, for permit eligibility, which supersedes the control date of November 13, 1997, if the Council decides to develop a limited entry program for the American Samoa longline fishery.

The Council believes that there is a risk of speculative entry into the longline fishery while the Council further evaluates the potential benefits and costs of limited entry alternatives. The control date is designed to discourage speculative entry during this period of analysis. The control date does not commit the Council or NMFS to any particular management regime or criteria for entry into the American Samoa longline fishery. Fishermen are not guaranteed future participation in this fishery, regardless of their level of participation before or after the control date. The Council may choose a different control date or it may choose a management regime that does not involve a control date. Other criteria, such as documentation of commercial landings and sales, may be used to determine eligibility for participation in the fishery. The Council also may choose to take no further action to control entry or access to the fishery, in which case the control date may be rescinded.

Authority: 16 U.S.C. 1801 *et seq.*

Dated: October 13, 2000.

Penelope D. Dalton,

Assistant Administrator for Fisheries, National Marine Fisheries Service.

[FR Doc. 00–26936 Filed 10–18–00; 8:45 am]

BILLING CODE 3510–22–S

Notices

Federal Register

Vol. 65, No. 203

Thursday, October 19, 2000

This section of the FEDERAL REGISTER contains documents other than rules or proposed rules that are applicable to the public. Notices of hearings and investigations, committee meetings, agency decisions and rulings, delegations of authority, filing of petitions and applications and agency statements of organization and functions are examples of documents appearing in this section.

DEPARTMENT OF AGRICULTURE

Forest Service

Opal Creek Scenic Recreation Area (SRA) Advisory Council

AGENCY: Forest Service, USDA.

ACTION: Forest Service Notice of Meeting.

SUMMARY: An Opal Creek Scenic Recreation Area Advisory Council meeting will convene in Salem, Oregon on Saturday, November 4, 2000. The meeting is scheduled to begin at 9 a.m., and will conclude at approximately 2 p.m. The meeting will be held at the Salem City Hall, Room 220, located on 555 Liberty Street SE in Salem, OR.

The Opal Creek Wilderness and Opal Creek Scenic Recreation Area Act of 1996 (Opal Creek Act) (Pub. L. 104–208) directed the Secretary of Agriculture to establish the Opal Creek Scenic Recreation Area Advisory Council. The Advisory Council is comprised of thirteen members representing state, county and city governments, and representatives of various organizations, which include mining industry, environmental organizations, inholders in Opal Creek Scenic Recreation Area, economic development, Indian tribes, adjacent landowners and recreation interests. The council provides advice to the Secretary of Agriculture on preparation of a comprehensive Opal Creek Management Plan for the SRA, and consults on a periodic and regular basis on the management of the area. The tentative agenda includes:

(1) Issue Development, (2) public involvement strategy, and (3) other topic items identified at the October 16, 2000 advisory council meeting.

The public comment period is tentatively scheduled to begin at 1 p.m. Time allotted for individual presentations will be limited to 3 minutes. Written comments are encouraged, particularly if the material cannot be presented within the time limits of the comment period. Written comments may be submitted prior to the November 4 meeting by sending them to Designated Federal Official Stephanie Phillips at the address given below.

FOR FURTHER INFORMATION CONTACT: For more information regarding this meeting, contact Designated Federal Official Stephanie Phillips; Willamette National Forest, Detroit Ranger District, HC 73 Box 320, Mill City, OR 97360; (503) 854–3366.

Dated: October 13, 2000.

Sue Olson,

Acting Forest Supervisor.

[FR Doc. 00–26874 Filed 10–18–00; 8:45 am]

BILLING CODE 3410–11–M

DEPARTMENT OF AGRICULTURE

Forest Service

Opal Creek Scenic Recreation Area (SRA) Advisory Council

AGENCY: Forest Service, USDA

ACTION: Forest Service; Notice of Meeting.

SUMMARY: An Opal Creek Scenic Recreation Area Advisory Council meeting will convene in Stayton, Oregon on Monday, November 13, 2000. The meeting is scheduled to begin at 6 p.m., and will conclude at approximately 8:30 p.m. The meeting will be held in the South Room of the Stayton Community Center located on 400 West Virginia Street in Stayton, OR.

The Opal Creek Wilderness and Opal Creek Scenic Recreation Area Act of 1996 (Opal Creek Act) (Pub. L. 104–208) directed the Secretary of Agriculture to establish the Opal Creek Scenic Recreation Area Advisory Council. The Advisory Council is comprised of thirteen members representing state, county and city governments, and representatives of various organizations, which include mining industry, environmental organizations, inholders in Opal Creek Scenic Recreation Area, economic development, Indian tribes, adjacent landowners and recreation interests. The council provides advice to the Secretary of Agriculture on preparation of a comprehensive Opal Creek Management Plan for the SRA, and consults on a periodic and regular basis on the management of the area. The tentative agenda will include refining issue statements and describing the desired future condition of the SRA.

The public comment period is tentatively scheduled to begin at 8 p.m. Time allotted for individual presentations will be limited to 3 minutes. Written comments are encouraged, particularly if the material cannot be presented within the time limits of the comment period. Written comments may be submitted prior to the November 13 meeting by sending them to Designated Federal Official Stephanie Phillips at the address given below.

FOR FURTHER INFORMATION CONTACT: For more information regarding this meeting, contact Designated Federal Official Stephanie Phillips; Willamette National Forest, Detroit Ranger District, HC 73 Box 320, Mill City, OR 97360; (503) 854–3366.

Dated: October 13, 2000.

Sue Olson,

Acting Forest Supervisor.

[FR Doc. 00–26875 Filed 10–18–00; 8:45 am]

BILLING CODE 3410–11–M

DEPARTMENT OF COMMERCE

Membership of the Departmental Performance Review Board

AGENCY: Department of Commerce.

ACTION: Notice of membership of Department Performance Review Board.

SUMMARY: In accordance with 5 U.S.C. 4314(c)(4), the Department of Commerce announces the appointment of persons to serve as members of the Department Performance Review Board (DPRB). The DPRB is responsible for reviewing performance appraisals and ratings of Senior Executive Service (SES) members and serves as the higher level review for executives who report to an appointing authority. Such reviews are conducted only at the executive's request. The appointment of these members to the DPRB will be for a period of 24 months.

EFFECTIVE DATE: The effective date of service of appointees to the DPRB is October 1, 2000.

FOR FURTHER INFORMATION CONTACT: Deborah Jefferson, Director, Office of Executive Resources, Office of Human Resources Management, Office of the Director, 14th and Constitution Avenue, NW., Washington, DC 20230, (202) 482–8075.

SUPPLEMENTARY INFORMATION: The names and position titles of the members of the DPRB are set forth below by organization:

Chief of Staff and Chief Financial Officer and Assistant Secretary for Administration

Roger W. Baker, Chief Information Officer
John S. Gray, III, Director, Office of Business Liaison
K. David Holmes, Jr., Deputy Assistant Secretary for Security
Raul Perea-Henze, Deputy Assistant Secretary for Administration

General Counsel

Barbara S. Fredericks, Assistant General Counsel for Administration
Mary M. Street, Deputy General Counsel

Economics and Statistics Administration (ESA)

James L. Price, Deputy Under Secretary for Economic Affairs
James K. White, Under Secretary for Management
William G. Barron, Jr., Deputy Director, Bureau of the Census
Marvin D. Raines, Associate Director for Field Operations, Bureau of the Census
J. Steven Landefeld, Director of Bureau of Economic Analysis
Cynthia Z. F. Clark, Associate Director for Methodology and Standards, Bureau of the Census

National Telecommunications and Information Administration

Bernadette McGuire-Rivera, Associate Administrator for Telecommunications and Information Applications
John F. Sopko, Deputy Assistant Secretary for Administration

International Trade Administration

Jonathan C. Menes, Director, Office of Trade and Economic Analysis, Trade Development
Susan H. Kuhbach, Senior Director, Import Administration
Stephen P. Jacobs, Deputy Assistant Secretary for Agreements Compliance, Market Access and Compliance
Elizabeth Sears, Deputy Assistant Secretary, U.S. & Foreign Commercial Service
Linda Cheatham, Chief Financial Officer and Director of Administration
Leslie R. Doggett, Deputy Assistant Secretary for Tourism Industries, Trade Development
Edward J. Casselle, Deputy Assistant Secretary for Africa, Market Access and Compliance

National Oceanic and Atmospheric Administration

Susan B. Fruchter, Counselor to the Under Secretary; Director, Office of Policy and Strategic Planning
William B. Wheler, Director, Office of Legislative Affairs
Penelope D. Dalton, Assistant Administrator, National Marine Fisheries Service
Rear Admiral Evelyn J. Fields, Director, Office of Marine and Aviation Operations; Director, NOAA Commissioned Corps
John Jones, Deputy Assistant Administrator, National Weather Service
Stewart S. Remer, Deputy Chief Administrative Officer, Office of Finance and Administration
Mary Glackin, Deputy Assistant Administrator, National Environmental Satellite and Data Information Service

Bureau of Export Administration

Eileen M. Albanese, Director, Office of Exporter Services
Steven Goldman, Director, Office of Chemical and Biological Controls and Treaty Compliance
Dexter M. Price, Director, Office of Antiboycott Compliance

Dated: October 3, 2000.

Deborah Jefferson,

Executive Secretary, DPRB.

[FR Doc. 00–26806 Filed 10–18–00; 8:45 am]

BILLING CODE 3510–BS–M

DEPARTMENT OF COMMERCE

International Trade Administration

[A–428–821]

Large Newspaper Printing Presses and Components Thereof, Whether Assembled or Unassembled, from Germany: Preliminary Results and Rescission in Part of Antidumping Duty Administrative Reviews and Final Determinations of Scope Inquiries

AGENCY: Import Administration, International Trade Administration, Department of Commerce.

ACTION: Notice of preliminary results of antidumping duty administrative reviews.

SUMMARY: In response to requests by the respondent MAN Roland Druckmaschinen AG and the petitioner Goss Graphic Systems, Inc., the Department of Commerce is conducting administrative reviews of the antidumping duty order on large newspaper printing presses and components thereof, whether assembled or unassembled, from Germany. These reviews cover MAN Roland Druckmaschinen AG and Koenig & Bauer AG, manufacturers/exporters of the subject merchandise to the United States. The periods of review for Koenig & Bauer AG are September 1, 1997, through August 31, 1998, and September 1, 1998, through August 31, 1999. The period of review for MAN Roland Druckmaschinen AG is September 1, 1998, through August 31, 1999.

We preliminarily determine that sales have not been made below normal value for MAN Roland Druckmaschinen AG. If these preliminary results are adopted in our final results of administrative review, we will instruct the Customs Service not to assess antidumping duties on all appropriate entries. Interested parties are invited to comment on these preliminary results.

In accordance with 19 CFR 351.213(d)(3), the Department of Commerce is rescinding these reviews in part as to Koenig & Bauer AG because we verified that it made no sales or shipments of subject merchandise during the review periods. In addition, we determine that certain LNPP parts imported by KBA North America Inc. Web Press Division from Germany during the period 1998 through 1999, pursuant to contracts for the sale of LNPP systems to Dayton Newspapers, Inc. and Fayetteville Publishing Company, are outside the scope of the order.

EFFECTIVE DATE: October 19, 2000.

FOR FURTHER INFORMATION CONTACT: David J. Goldberger, Barbara Wojcik-Betancourt, or Kate Johnson, Office 2, AD/CVD Enforcement Group I, Import Administration-Room B099, International Trade Administration, U.S. Department of Commerce, 14th Street and Constitution Avenue, NW., Washington, DC 20230; telephone: (202) 482–4136, 482–0629, or 482–4929, respectively.

SUPPLEMENTARY INFORMATION:

The Applicable Statute

Unless otherwise indicated, all citations to the Tariff Act of 1930, as amended (the Act), are references to the provisions effective January 1, 1995, the effective date of the amendments made to the Act by the Uruguay Round Agreements Act (URAA). In addition, unless otherwise indicated, all citations to the Department of Commerce's (the Department's) regulations are to 19 CFR Part 351 (April 1999).

Background

On July 23, 1996, the Department published in the **Federal Register**, 61 FR 38166, the final affirmative antidumping duty determination on large newspaper printing presses and components thereof, whether assembled or unassembled (LNPP), from Germany. We published an antidumping duty order on September 4, 1996 (61 FR 46623).

On July 21, 1997, the Department published *Scope Inquiry Instructions and Revision of Suspension of Liquidation Procedures for Entries of LNPP Elements Outside the Scope of the Antidumping Duty Order,* 62 FR 38975 (*Scope Inquiry Instructions*).

During 1997, 1998, and 1999, KBA North America Inc. Web Press Division (KBA NA), an importer of LNPP elements (*i.e.*, parts and subcomponents) from Germany, filed several scope inquiries pursuant to the procedures the Department developed subsequent to the issuance of the antidumping duty order (*see Scope Inquiry Instructions,* 62 FR at 38975).

On September 30, 1998, Goss Graphic Systems, Inc. (the petitioner) requested that the Department defer for one year the initiation of its review of entries by Koenig & Bauer AG (KBA) subject to the above-referenced order covering the period September 1, 1997, to August 31, 1998. On October 29, 1998, we granted the petitioner's request and deferred this review accordingly. *See Initiation of Antidumping Duty and Countervailing Duty Administrative Reviews, Requests for Revocation in Part, and Deferral of Administrative Reviews,* 63 FR 58009 (October 29, 1998).

On September 9, 1999, the Department published in the **Federal Register** a notice advising of the opportunity to request an administrative review of this order for the period September 1, 1998, through August 31, 1999 (64 FR 48980). The Department received requests for an administrative review of KBA [1] and MAN Roland Druckmaschinen AG and its U.S. affiliate MAN Roland Inc. (collectively MAN Roland). We published a notice of initiation of these reviews, including the deferred review, on November 4, 1999 (64 FR 60161).

On November 24, 1999, we issued an antidumping questionnaire to the two respondents. We received responses during the period December 1999 through January 2000. We issued supplemental questionnaires in March, April and June 2000. We received responses during the period April through July 2000.

On March 13, 2000, the Department extended the time limit for the preliminary results in these reviews until September 29, 2000. *See Postponement of Preliminary Results of Antidumping Duty Administrative Reviews,* 65 FR 13364.

On June 1 and 2, 2000, the petitioner alleged, based on shipment manifest data, that KBA NA may have failed to report all of its German parts importations for its U.S. press sales that were the subject of several scope inquiry requests in 1997, 1998, and 1999. Specifically, it alleged that KBA NA may have imported printing units of German origin, but never requested a scope ruling for these parts prior to importation. The petitioner requested that the Department send a supplemental questionnaire soliciting additional information on this issue.

On June 6, 2000, KBA responded to the petitioner's allegations arguing that the merchandise at issue was not of German origin. On June 14, 2000, we issued a supplemental questionnaire to KBA NA soliciting additional information on this topic. We received a response to this supplemental questionnaire on June 21, 2000.

The Department conducted verification of KBA's responses during the period June 26 through August 4, 2000, pursuant to section 782(i) of the Act. In August and September 2000, the Department issued its verification reports.

Scope of the Reviews

The products covered by these reviews are large newspaper printing presses, including press systems, press additions and press components, whether assembled or unassembled, whether complete or incomplete, that are capable of printing or otherwise manipulating a roll of paper more than two pages across. A page is defined as a newspaper broadsheet page in which the lines of type are printed perpendicular to the running of the direction of the paper or a newspaper tabloid page with lines of type parallel to the running of the direction of the paper.

In addition to press systems, the scope of these reviews includes the five press system components. They are: (1) A printing unit, which is any component that prints in monocolor, spot color and/or process (full) color; (2) a reel tension paster (RTP), which is any component that feeds a roll of paper more than two newspaper broadsheet pages in width into a subject printing unit; (3) a folder, which is a module or combination of modules capable of cutting, folding, and/or delivering the paper from a roll or rolls of newspaper broadsheet paper more than two pages in width into a newspaper format; (4) conveyance and access apparatus capable of manipulating a roll of paper more than two newspaper broadsheet pages across through the production process and which provides structural support and access; and (5) a computerized control system, which is any computer equipment and/or software designed specifically to control, monitor, adjust, and coordinate the functions and operations of large newspaper printing presses or press components.

A press addition is comprised of a union of one or more of the press components defined above and the equipment necessary to integrate such components into an existing press system.

Because of their size, large newspaper printing press systems, press additions, and press components are typically shipped either partially assembled or unassembled, complete or incomplete, and are assembled and/or completed prior to and/or during the installation process in the United States. Any of the five components, or collection of components, the use of which is to fulfill a contract for large newspaper printing press systems, press additions, or press components, regardless of degree of assembly and/or degree of combination with non-subject elements before or after importation, is included in the scope of these reviews. Also included in the scope are elements of a LNPP system, addition or component, which taken altogether, constitute at least 50 percent of the cost of manufacture of any of the five major LNPP components of which they are a part.

For purposes of these reviews, the following definitions apply irrespective of any different definition that may be found in Customs rulings, U.S. Customs law or the *Harmonized Tariff Schedule of the United States* (HTSUS): the term ''unassembled'' means fully or partially unassembled or disassembled; and (2) the term ''incomplete'' means lacking one or more elements with which the LNPP is intended to be equipped in order to fulfill a contract for a LNPP system, addition or component.

This scope does not cover spare or replacement parts. Spare or replacement parts imported pursuant to a LNPP contract, which are not integral to the original start-up and operation of the LNPP, and are separately identified and valued in a LNPP contract, whether or

[1] The administrative review of KBA includes the period September 1, 1998–August 31, 1999, as well as the deferred period September 1, 1997–August 31, 1998.

not shipped in combination with covered merchandise, are excluded from the scope of these reviews. Used presses are also not subject to this scope. Used presses are those that have been previously sold in an arm's-length transaction to a purchaser that used them to produce newspapers in the ordinary course of business.

Further, these reviews cover all current and future printing technologies capable of printing newspapers, including, but not limited to, lithographic (offset or direct), flexographic, and letterpress systems. The products covered by these reviews are imported into the United States under subheadings 8443.11.10, 8443.11.50, 8443.30.00, 8443.59.50, 8443.60.00, and 8443.90.50 of the HTSUS. Large newspaper printing presses may also enter under HTSUS subheadings 8443.21.00 and 8443.40.00. Large newspaper printing press computerized control systems may enter under HTSUS subheadings 8471.49.10, 8471.49.21, 8471.49.26, 8471.50.40, 8471.50.80, and 8537.10.90. Although the HTSUS subheadings are provided for convenience and customs purposes, our written description of the scope of these reviews is dispositive.

Final Scope Rulings for KBA NA

In separate preliminary scope inquiry segments of the proceeding, the Department preliminarily determined, pursuant to the special procedures developed subsequent to the issuance of the antidumping duty order (*see Scope Inquiry Instructions,* 62 FR at 38975), that various LNPP parts or subcomponents for the production of a LNPP system sold to Dayton Newspapers, Inc. and to Fayetteville Publishing Company were found to be outside the scope of the order, and subsequently instructed the Customs Service to suspend preliminarily liquidation of these parts or subcomponents at a zero deposit rate.[2] The Department stated in its preliminary scope ruling memoranda that it would make final determinations with respect to KBA's LNPP parts importations in the context of an administrative review, if one was requested, for a period which captured entries of the merchandise at issue and the completion (*i.e.,* production, assembly and installation) of the LNPP components of which they are a part. Thus, the Department determined, in the context of these administrative reviews, that various LNPP parts or subcomponents for the production of a LNPP system sold to Dayton Newspapers, Inc. and to Fayetteville Publishing Company are outside the scope of the order because, when taken altogether, they constitute less than 50 percent of the cost of manufacture of the major LNPP components of which they are a part. With respect to petitioner's allegation that KBA NA may have inported printing units of German origin, we verified that these printing units were not of German origin. *See* Memorandum From Peter Scholl and Laurens van Houten to Neal Halper on *Verification of the Cost of Manufacturing of Koenig and Bauer Modling-Modling, Austria,* dated September 15, 2000. For complete analysis, *see Recommendation Memorandum—Final Ruling on Requests by KBA NA for Exclusion of Certain LNPP Parts from the Scope of the Antidumping Duty Order on Large Newspaper Printing Presses and Components Thereof, Whether Assembled or Unassembled, from Germany,* dated September 29, 2000.

Recission in Part of Reviews

In its December 22, 1999, Section A questionnaire response, KBA stated that KBA NA did not import and KBA did not export subject merchandise to the United States during the periods of review. The Department verified that neither KBA nor KBA NA made sales or shipments of subject merchandise during the review periods. (*See* Memorandum For The File From Barbara Wojcik-Betancourt and Kate Johnson on *Verification of the Questionnaire Responses of Koenig & Bauer AG and KBA North America Inc. Web Press Division in the Antidumping Duty Administrative Review of Large Newspaper Printing Presses and Components Thereof, Whether Assembled of Unassembled, from Germany,* dated August 25, 2000 at pages 6–8). Therefore, in accordance with 19 CFR 351.213(d)(3), we are rescinding in part these reviews of the antidumping duty order on LNPPs from Germany with respect to KBA.

Product Comparisons

Although MAN Roland's home market was viable, in accordance with section 773 of the Act and our normal practice in this proceeding and in the companion proceeding involving Japan, we based normal value on constructed value because we determined that, even though the general product characteristics of LNPP systems are comparable enough for them to be considered a foreign like product, the physical differences in the sub-component specifications between LNPPs sold in the United States and the home market are so great that meaningful price-to-price comparisons cannot be made. *See Large Newspaper Printing Presses and Components Thereof, Whether Assembled or Unassembled, from Japan: Preliminary Results of Antidumping Duty Administrative Reviews,* 64 FR 55243, 55245 (October 12, 1999), followed in *Large Newspaper Printing Presses and Components Thereof, Whether Assembled or Unassembled, from Japan: Final Results of Antidumping Duty Administrative Review and Partial Rescission of Administrative Reviews,* 65 FR 7492, 7495 (February 15, 2000) and *Notice of Preliminary Determination of Sales at Less Than Fair Value and Postponement of Final Determination: Large Newspaper Printing Presses and Components Thereof: Whether Assembled or Unassembled, from Germany,* 61 FR 8035, 8037 (March 1, 1996), followed in *Notice of Final Determination of Sales at Less Than Fair Value: Large Newspaper Printing Presses and Components Thereof, Whether Assembled or Unassembled, from Germany,* 61 FR 38166 (July 23, 1996) (*Final Determination*).

Home Market Sales Used To Calculate Constructed Value Profit and Selling Expenses

On June 23, 2000, the petitioner submitted a letter stating that Mitsubishi Heavy Industries, Inc. (MHI), a respondent in the companion Japan case, did not report home market sales that are contemporaneous with the date of its U.S. sale. On June 30, 2000, we asked MHI to report additional home market sales to the Department. Because this issue is not limited to MHI alone, we also requested additional home market sales from MAN Roland and from Tokyo Kikai Seisakusho, Ltd., the other respondent in the companion Japan case.

Upon analysis of the home market sales on the record for MAN Roland as well as the respondents in the companion Japan case, we determined that the appropriate universe of home market sales used to calculate constructed value profit and selling expenses should comprise all sales made during the period beginning with three months prior to the respondent's

[2] *See* Memoranda From The Team to Richard Moreland dated December 22, 1997, and January 27, 1998; Memoranda From The Team to Maria H. Tildon dated June 17, 1998, and August 4, 1998; Memoranda From The Team To Holly A. Kuga dated December 30, 1998, January 14, 1999, and February 1, 1999.

U.S. sale (June 1997),[3] and then the nine subsequent months, including the month of sale (March 1, 1997-February 28, 1998). *See* the September 29, 2000, memorandum from the team to Richard W. Moreland on *Universe of Home Market Sales Used to Calculate Profit and Selling Expenses for Constructed Value* for further discussion.

Normal Value Comparisons

To determine whether MAN Roland's sale of a LNPP to the United States was made at less than normal value, we compared constructed export price (CEP) to the normal value, as described below.

Constructed Export Price and Further Manufacturing

MAN Roland

We calculated CEP, in accordance with sections 772(b), (c) and (d) of the Act, for MAN Roland's period of review (POR) sale because the contract governing the U.S. sale was executed in the United States by MAN Roland's affiliated U.S. sales agent and the affiliated U.S. sales agent coordinated rigging and installation support, which we have classified as further manufacturing.

We calculated CEP based on the packed, installed price to an unaffiliated customer in the United States. We made deductions for the following charges: foreign inland freight charges; combined German inland insurance, marine insurance and U.S. inland insurance expenses; German handling, ocean freight, U.S. handling and U.S. inland freight expenses; U.S. brokerage; and U.S. Customs duty (including harbor maintenance and merchandise processing fees). Although MAN Roland reported international movement expenses in U.S. dollars, a review of source documents indicated that the expenses were actually incurred in German currency. Accordingly, we used the expenses incurred in German currency for purposes of the preliminary results. We also made deductions for commissions, imputed credit, warranty, direct training expenses, and other direct selling expenses. We deducted further those indirect selling expenses that related to economic activity in the United States.

In addition, we deducted the cost of further manufacturing or assembly, including installation expenses. We classified installation charges as part of further manufacturing, because the U.S. installation process involves extensive technical activities on the part of engineers and installation supervisors. *See Mitsubishi Heavy Industries* v. *United States,* 15 F. Supp. 2d 807, 815–17 (CIT 1998) (*Mitsubishi*).

Further, we made an adjustment for CEP profit in accordance with section 772(d)(3) of the Act.

Cost of Production (COP) Analysis

The Department disregarded certain sales made by MAN Roland during the less-than-fair-value (LTFV) investigation pursuant to the results of a cost test. Thus, in accordance with section 773(b)(2)(A)(ii) of the Act, there are reasonable grounds to believe or suspect that MAN Roland made sales in the home market at prices below the cost of producing the merchandise in the current review period. As a result, the Department initiated an investigation to determine whether MAN Roland made home market sales during the POR at prices below its COP within the meaning of section 773(b) of the Act.

We compared the COP figures to home market sales of the foreign like product, as required under section 773(b) of the Act, in order to determine whether these sales were made at prices below the COP. In determining whether to disregard home market sales made at prices below the COP, we examined whether: (1) within an extended period of time, such sales were made in substantial quantities; and (2) such sales were made at prices which permitted the recovery of all costs within a reasonable period of time.

The results of our cost test for MAN Roland indicated that certain home market sales were at prices below COP within an extended period of time, were made in substantial quantities, and would not permit the full recovery of all costs within a reasonable period of time. In accordance with section 773(b)(1) of the Act, we therefore excluded from our analysis the sales that failed the cost test and used the remaining above-cost sales as the basis for determining selling expenses and profit.

Normal Value

Constructed Value

MAN Roland

In accordance with section 773(e) of the Act, we calculated constructed value based on the sum of MAN Roland's cost of materials, fabrication, selling, general and administrative (SG&A) expenses and U.S. packing costs as reported in the U.S. sales database. In accordance with section 773(e)(2)(A), we based SG&A and profit on the amounts incurred and realized by MAN Roland in connection with the production and sale of the foreign like product in the ordinary course of trade, for consumption in the home market.

In accordance with section 773(e)(3) of the Act, we added the U.S. packing costs to a constructed value net of packing.

Price-to-Constructed Value Comparison

For the CEP to constructed value comparison, we deducted from constructed value the weighted-average home market imputed credit expenses, pursuant to section 773(a)(8) of the Act. We imputed credit expenses for constructed value using the weighted-average, German-currency-based, short-term interest rate reported for the POR, since home market sales were denominated in German currency.

Level of Trade and CEP Offset

In accordance with section 773(a)(1)(B) of the Act, to the extent practicable, we determine normal value based on sales in the comparison market at the same level of trade (LOT) as the export price or CEP transaction. The normal value LOT is that of the starting-price sales in the comparison market or, when normal value is based on constructed value, as is the case in these reviews, that of the sales from which we derive SG&A expenses and profit. For export price, the U.S. LOT is also the level of the starting-price sale, which is usually from the exporter to an unaffiliated U.S. customer. For CEP, it is the level of the constructed sale from the exporter to an affiliated importer, after the deductions required under section 772(d) of the Act.

To determine whether normal value sales are at a different LOT than export price or CEP sales, we examine stages in the marketing process and selling functions along the chain of distribution between the producer and the unaffiliated customer. If the comparison-market sales are at a different LOT, and the difference in LOT involves the performance of different selling activities and is demonstrated to affect price comparability, as manifested in a pattern of consistent price differences between the sales on which normal value is based and comparison-market sales at the LOT of the export transaction, we make an LOT adjustment under section 773(a)(7)(A) of the Act. For CEP sales, if the normal value level is more remote from the factory than the CEP level and there is no basis for determining whether the difference in the levels between normal value and CEP affects price

[3] Each of the respondents in the Japan administrative review and MAN Roland in the Germany administrative review shipped/entered only one LNPP into the United States during the POR that was completely assembled and installed.

comparability, we adjust normal value under section 773(a)(7)(B) of the Act (the CEP offset provision). The CEP offset is calculated as the lesser of the following:

1. The indirect selling expenses on the comparison market sale, or

2. The indirect selling expenses deducted from the starting price in calculating CEP. *See Notice of Final Determination of Sales of Less Than Fair Value: Certain Cut-to-Length Carbon Steel Plate from South Africa,* 62 FR 61731 (November 19, 1997).

We note that the U.S. Court of International Trade (CIT) has held that the Department's practice of determining LOTs for CEP transactions after CEP deductions is an impermissible interpretation of section 772(d) of the Act. *See Borden, Inc.* v. *United States,* 4 F. Supp. 2d 1221, 1241–42 (CIT 1998) (*Borden*). The Department believes, however, that its practice is in full compliance with the statute. On June 4, 1999, the CIT entered final judgement in *Borden* on the LOT issue. *See Borden Inc.* v. *United States,* Court No. 96–08–01970, Slip Op. 99–50 (CIT June 4, 1999). The government has filed an appeal of *Borden* which is pending before the U.S. Court of Appeals for the Federal Circuit. Consequently, the Department has continued to follow its normal practice of adjusting CEP under section 772(d) prior to starting a LOT analysis, as articulated by the Department's regulations at section 351.412.

In its questionnaire response, MAN Roland reported that sales to the unaffiliated customers were made at the same level of trade in both the United States and the home market. However, MAN Roland contends that, in the event that the Department classifies its U.S. sale as a CEP sale, then a LOT adjustment is appropriate to account for the differences between the actual LOT of the home market sales and the constructed LOT of the U.S. sale.

As discussed above, we have determined that MAN Roland's U.S. sale under review is properly classified as a CEP sale. To determine whether sales in the comparison market were at a different LOT than CEP sales, we normally examine the selling functions performed at the CEP level, after making the appropriate deductions under section 772(d) of the Act, and compare those selling functions to the selling functions performed in the home market LOT. However, despite our requests, MAN Roland did not submit sufficient information pertaining to selling functions in the U.S. market for purposes of this review. Accordingly, we were unable to perform a LOT analysis on MAN Roland's sales. Therefore, we did not make a LOT adjustment to normal value.

Currency Conversion

We made a currency conversion, in accordance with section 773A(a) of the Act, based on the official exchange rate in effect on the date of the U.S. sale as certified by the Federal Reserve Bank of New York.

Preliminary Results of Review

As a result of these reviews, we preliminarily determine that the weighted-average dumping margin for the 1998–1999 POR is:

Manufacturer/ exporter	Period	Margin
MAN Roland	9/1/98–8/31/99	0.00

We will disclose the calculations used in our analysis to parties to this proceeding within five days of the publication date of this notice. *See* 19 CFR 351.224(b). Any interested party may request a hearing within 30 days of publication. *See* 19 CFR 351.310(c). If requested, a hearing will be held 44 days after the publication of this notice, or the first workday thereafter.

Issues raised in the hearing will be limited to those raised in the respective case briefs and rebuttal briefs. *See* 19 CFR 351.310(c). Case briefs from interested parties and rebuttal briefs, limited to the issues raised in the respective case briefs, may be submitted not later than 30 days and 35 days, respectively, from the date of publication of these preliminary results. *See* 19 CFR 351.309(c) and (d). Parties who submit case briefs or rebuttal briefs in this proceeding are requested to submit with each argument (1) a statement of the issue and (2) a brief summary of the argument. Parties are also encouraged to provide a summary of the arguments not to exceed five pages and a table of statutes, regulations, and cases cited.

The Department will issue the final results of these administrative reviews, including the results of its analysis of issues raised in any written briefs or at the hearing, if held, not later than 120 days after the date of publication of this notice.

Interested parties who wish to request a hearing or to participate if one is requested, must submit a written request to the Assistant Secretary for Import Administration, Room B–099, within 30 days of the date of publication of this notice. Requests should contain: (1) The party's name, address and telephone number; (2) the number of participants; and (3) a list of issues to be discussed.

Assessment Rates

Upon completion of this administrative review, the Department shall determine, and the Customs Service shall assess, antidumping duties on all appropriate entries. The Department will issue appropriate appraisement instructions directly to the Customs Service upon completion of these reviews. The final results of these reviews shall be the basis for the assessment of antidumping duties on entries of merchandise covered by the final results of these reviews and for future deposits of estimated duties. Pursuant to 19 CFR 351.106(c)(2), we will instruct the Customs Service to liquidate without regard to antidumping duties all entries for any importer for whom the assessment rate is *de minimis* (*i.e.*, less than 0.50 percent). For assessment purposes, we intend to calculate an importer-specific assessment rate for the subject merchandise by dividing the dumping margin calculated for the U.S. sale examined by the total entered value of the sale examined.

With regard to KBA NA's entries of LNPP parts in 1998 and 1999 pursuant to contracts for the sale of LNPPs to Dayton Newspapers Inc. and Fayetteville Publishing Company, which were determined to be outside the scope of the order, we will instruct the Customs Service to liquidate these entries without regard to antidumping duties.

This notice also serves as a preliminary reminder to importers of their responsibility under 19 CFR 351.402(f)(2) to file a certificate regarding the reimbursement of antidumping duties prior to liquidation of the relevant entries during these review periods. Failure to comply with this requirement could result in the Secretary's presumption that reimbursement of antidumping duties occurred and the subsequent assessment of double antidumping duties.

Cash Deposit Requirements

The following cash deposit requirements will be effective for all shipments of the subject merchandise entered, or withdrawn from warehouse, for consumption on or after the publication date of the final results of these administrative reviews, as provided by section 751(a)(1) of the Act: (1) The cash deposit rate for the reviewed company (MAN Roland) will be that established in the final results of these reviews, except if the rate is less than 0.50 percent, and therefore, *de*

minimis within the meaning of 19 CFR 351.106(c)(1), in which case the cash deposit rate will be zero; (2) for previously reviewed or investigated companies not listed above, the cash deposit rate will continue to be the company-specific rate published for the most recent period; (3) if the exporter is not a firm covered in these reviews, a prior review, or the original LTFV investigation, but the manufacturer is, the cash deposit rate will be the rate established for the most recent period for the manufacturer of the merchandise; and (4) the cash deposit rate for all other manufacturers or exporters will continue to be 30.72 percent, the ''All Others'' rate made effective by the LTFV investigation. These requirements, when imposed, shall remain in effect until publication of the final results of the next administrative review.

These administrative reviews and notice are published in accordance with sections 751(a)(1) and 777(i)(1) of the Act.

Dated: September 29, 2000.

Troy H. Cribb,

Acting Assistant Secretary for Import Administration.

[FR Doc. 00–25789 Filed 10–18–00; 8:45 am]

BILLING CODE 3510–DS–P

DEPARTMENT OF COMMERCE

International Trade Administration

A–588–837

Large Newspaper Printing Presses and Components Thereof, Whether Assembled or Unassembled, From Japan: Preliminary Results of Antidumping Duty Administrative Review

AGENCY: Import Administration, International Trade Administration, Department of Commerce.

ACTION: Notice of preliminary results of antidumping duty administrative review.

SUMMARY: In response to a request by the petitioner and two producers/exporters of the subject merchandise, the Department of Commerce is conducting an administrative review of the antidumping duty order on large newspaper printing presses and components thereof, whether assembled or unassembled, from Japan. This review covers two manufacturers/exporters of the subject merchandise to the United States (Mitsubishi Heavy Industries, Ltd. and Tokyo Kikai Seisakusho, Ltd.). The period of review is September 1, 1998 through August 31, 1999.

We preliminarily determine that sales have been made below the normal value for one of the two companies subject to this review. If these preliminary results are adopted in our final results of this administrative review, we will instruct the Customs Service to assess antidumping duties on all appropriate entries.

We invite interested parties to comment on these preliminary results. Parties who wish to submit comments in this proceeding are requested to submit with each argument: (1) A statement of the issue; and (2) a brief summary of the argument. Parties are also encouraged to provide a summary of the arguments not to exceed five pages and a table of statutes, regulations, and cases cited.

EFFECTIVE DATE: October 19, 2000.

FOR FURTHER INFORMATION CONTACT: James Nunno or Christopher Priddy, AD/CVD Enforcement Group I, Office 2, Import Administration, International Trade Administration, U.S. Department of Commerce, 14th Street and Constitution Avenue, NW., Washington, DC 20230; telephone: (202) 482–0783 or (202) 482–1130, respectively.

SUPPLEMENTARY INFORMATION:

Period of Review

The period of review (POR) is September 1, 1998 through August 31, 1999.

The Applicable Statute

Unless otherwise indicated, all citations to the Tariff Act of 1930, as amended (the Act) are references to the provisions effective January 1, 1995, the effective date of the amendments made to the Act by the Uruguay Round Agreements Act (URAA). In addition, unless otherwise indicated, all citations to the Department's regulations are to 19 CFR part 351 (1999).

Background

During the previous administrative review period, covering sales of the subject merchandise for the period September 1, 1997 through August 31, 1998, Mitsubishi Heavy Industries, Ltd. (MHI) reported a U.S. sale to the Bergen Record which was entered into contract during that review period. *See* MHI's section A questionnaire response, dated January 7, 1999, at Exhibit 1. However, we deferred review of this sale until this administrative review period because the entries relating to this sale were not fully delivered and installed by the conclusion of that review period.

On September 9, 1999, the Department of Commerce (the Department) published in the **Federal Register** a notice of ''Opportunity to Request an Administrative Review'' of the antidumping duty order on large newspaper printing presses and components thereof, whether assembled or unassembled (LNPP), from Japan covering the period September 1, 1998, through August 31, 1999. *See Antidumping or Countervailing Duty Order, Finding, or Suspended Investigation; Opportunity to Request Administrative Review,* 64 FR 48980 (Sept. 9, 1999).

On July 31, 1999, in accordance with 19 CFR 351.213(b), the petitioner, Goss Graphic Systems, Inc., requested an administrative review of the antidumping duty order for the following producers/exporters of LNPP: MHI and Tokyo Kikai Seisakusho, Ltd. (TKS). We also received requests for a review from MHI and TKS on July 31, 1999. We published a notice of initiation of this review on August 30, 1999. *See Initiation of Antidumping and Countervailing Duty Administrative Reviews and Requests for Revocation in Part*, 64 FR 60161 (Nov. 4, 1999).

On November 24, 1999, we issued antidumping questionnaires to the two respondents. We received responses to these questionnaires in December 1999 and January 2000.

On December 14, 1999, TKS requested that it defer reporting a sale to Dow Jones & Company (Dow Jones) until the next administrative review because, although TKS entered into an LNPP sales contract with Dow Jones during the POR, the entries relating to this sale will not be fully delivered and installed by the conclusion of the present review. On December 21, 1999, we notified TKS that it may report data on the Dow Jones sale after it is completed, during the next administrative review.

On March 13, 2000, the Department extended the time limit for the preliminary results in this review until September 29, 2000. *See Large Newspaper Printing Presses from Japan and Germany: Postponement of Preliminary Results of Antidumping Duty Administrative Reviews*, 65 FR 13364 (Mar. 13, 2000).

We issued supplemental questionnaires to MHI in April and May 2000, and received responses to these questionnaires in May and June 2000. We issued supplemental questionnaires to TKS in March, May, July and August 2000, and received responses to these questionnaires in May, June, July and September 2000.

On June 23, 2000, the petitioner submitted a letter stating that MHI did not report home market sales that are contemporaneous with the date of its

U.S. sale. In June and July 2000, we asked both MHI and TKS to report additional home market sales to the Department. MHI and TKS reported this additional sales and cost information in July and August 2000. *See* the ''Home Market Sales Used to Calculate Constructed Value Profit and Selling Expenses'' section of the notice below for further discussion.

Pursuant to section 782(i)(3) of the Act, we conducted verification of MHI's sales and cost responses in Japan in July and August 2000. In addition, we conducted verification of MHI's U.S. sales responses in September 2000.

Scope of the Review

The products covered by this review are large newspaper printing presses, including press systems, press additions, and press components, whether assembled or unassembled, whether complete or incomplete, that are capable of printing or otherwise manipulating a roll of paper more than two pages across. A page is defined as a newspaper broadsheet page in which the lines of type are printed perpendicular to the running of the direction of the paper or a newspaper tabloid page with lines of type parallel to the running of the direction of the paper.

In addition to press systems, the scope of this review includes the five press system components. They are: (1) A printing unit, which is any component that prints in monocolor, spot color, and/or process (full) color; (2) a reel tension paster, which is any component that feeds a roll of paper more than two newspaper broadsheet pages in width into a subject printing unit; (3) a folder, which is a module or combination of modules capable of cutting, folding, and/or delivering the paper from a roll or rolls of newspaper broadsheet paper more than two pages in width into a newspaper format; (4) conveyance and access apparatus capable of manipulating a roll of paper more than two newspaper broadsheet pages across through the production process and which provides structural support and access; and (5) a computerized control system, which is any computer equipment and/or software designed specifically to control, monitor, adjust, and coordinate the functions and operations of large newspaper printing presses or press components.

A press addition is comprised of a union of one or more of the press components defined above and the equipment necessary to integrate such components into an existing press system.

Because of their size, large newspaper printing press systems, press additions, and press components are typically shipped either partially assembled or unassembled, complete or incomplete, and are assembled and/or completed prior to and/or during the installation process in the United States. Any of the five components, or collection of components, the use of which is to fulfill a contract for large newspaper printing press systems, press additions, or press components, regardless of degree of assembly and/or degree of combination with non-subject elements before or after importation, is included in the scope of this review. Also included in the scope are elements of a LNPP system, addition, or component, which taken altogether, constitute at least 50 percent of the cost of manufacture of any of the five major LNPP components of which they are a part.

For purposes of this review, the following definitions apply irrespective of any different definition that may be found in Customs rulings, U.S. Customs law or the *Harmonized Tariff Schedule of the United States* (HTSUS): the term ''unassembled'' means fully or partially unassembled or disassembled; and (2) the term ''incomplete'' means lacking one or more elements with which the LNPP is intended to be equipped in order to fulfill a contract for a LNPP system, addition or component.

This scope does not cover spare or replacement parts. Spare or replacement parts imported pursuant to a LNPP contract, which are not integral to the original start-up and operation of the LNPP, and are separately identified and valued in a LNPP contract, whether or not shipped in combination with covered merchandise, are excluded from the scope of this review. Used presses are also not subject to this scope. Used presses are those that have been previously sold in an arm's-length transaction to a purchaser that used them to produce newspapers in the ordinary course of business.

Also excluded from the scope, in accordance with the Department's determination in a changed-circumstances antidumping duty administrative review of this order with respect to MHI which resulted in the partial revocation of the order with respect to certain merchandise, are elements and components of LNPP systems, and additions thereto, which feature a 22 inch cut-off, 50 inch web width and a rated speed no greater than 75,000 copies per hour. *See Large Newspaper Printing Presses Components Thereof, Whether Assembled or Unassembled, from Japan: Final Results of Changed Circumstances Antidumping Duty Administrative Review and Intent to Revoke Antidumping Duty Order, In Part*, 64 FR 72315 (Dec. 27, 1999). In addition to the specifications set out in this paragraph, all of which must be met in order for the product to be excluded from the scope of the order, the product must also meet all of the specifications detailed in the five numbered sections following this paragraph. If one or more of these criteria is not fulfilled, the product is not excluded from the scope of the order.

1. *Printing Unit:* A printing unit which is a color keyless blanket-to-blanket tower unit with a fixed gain infeed and fixed gain outfeed, with a rated speed no greater than 75,000 copies per hour, which includes the following features:

- Each tower consisting of four levels, one or more of which must be populated.
- Plate cylinders which contain slot lock-ups and blanket cylinders which contain reel rod lock-ups both of which are of solid carbon steel with nickel plating and with bearers at both ends which are configured in-line with bearers of other cylinders.
- Keyless inking system which consists of a passive feed ink delivery system, an eight roller ink train, and a non-anilox and non-porous metering roller.
- The dampener system which consists of a two nozzle per page spraybar and two roller dampener with one chrome drum and one form roller.
- The equipment contained in the color keyless ink delivery system is designed to achieve a constant, uniform feed of ink film across the cylinder without ink keys. This system requires use of keyless ink which accepts greater water content.

2. *Folder:* A module which is a double 3:2 rotary folder with 160 pages collect capability and double (over and under) delivery, with a cut-off length of 22 inches. The upper section consists of three-high double formers (total of 6) with six sets of nipping rollers.

3. *RTP:* A component which is of the two-arm design with core drives and core brakes, designed for 50 inch diameter rolls; and arranged in the press line in the back-to-back configuration (left and right hand load pairs).

4. *Conveyance and Access Apparatus:* Conveyance and access apparatus capable of manipulating a roll of paper more than two newspaper broadsheets across through the production process, and a drive system which is of conventional shafted design.

5. *Computerized Control System:* A computerized control system, which is any computer equipment and/or software designed specifically to control, monitor, adjust, and coordinate the functions and operations of large newspaper printing presses or press components.

Further, this review covers all current and future printing technologies capable of printing newspapers, including, but not limited to, lithographic (offset or direct), flexographic, and letterpress systems. The products covered by this review are imported into the United States under subheadings 8443.11.10, 8443.11.50, 8443.30.00, 8443.59.50, 8443.60.00, and 8443.90.50 of the HTSUS. Large newspaper printing presses may also enter under HTSUS subheadings 8443.21.00 and 8443.40.00. Large newspaper printing press computerized control systems may enter under HTSUS subheadings 8471.49.10, 8471.49.21, 8471.49.26, 8471.50.40, 8471.50.80, and 8537.10.90. Although the HTSUS subheadings are provided for convenience and customs purposes, our written description of the scope of this review is dispositive.

Home Market Sales To Calculate Constructed Value Profit and Selling Expenses

On June 23, 2000, Goss Graphic Systems, Inc., the petitioner in this proceeding, submitted a letter stating that MHI did not report home market sales that are contemporaneous with the date of its U.S. sale. On June 30, 2000, we asked MHI to report additional home market sales to the Department. Because this issue is not limited to MHI alone, we also requested additional sales from TKS.

Upon analysis of the home market sales on the record for both MHI and TKS in this administrative review, we determined that the appropriate universe of home market sales used to calculate constructed value (CV) profit and selling expenses should comprise all sales made during the period beginning with three months prior to the respondent's U.S. sale,[1] and then the nine subsequent months, including the month of sale. *See* the September 29, 2000, memorandum from the team to Richard W. Moreland entitled ''Universe of Home Market Sales Used to Calculate Profit and Selling Expenses for Constructed Value'' for further discussion.

[1] Both of the respondents in this administrative review shipped/entered only one LNPP into the United States during the POR that was completely assembled and installed.

Normal Value Comparisons

To determine whether MHI's and TKS's sales of LNPPs to the United States were made at less than normal value (NV), we compared constructed export price (CEP) to the NV, as described in the ''Constructed Export Price'' and ''Normal Value'' sections of this notice.

Although the home market was viable for both respondents, in accordance with section 773 of the Act, we based NV on CV because we determined that the unique, custom-built nature of each LNPP sold does not permit proper price-to-price comparisons. *See Large Newspaper Printing Presses and Components Thereof, Whether Assembled or Unassembled, From Japan: Preliminary Results of Antidumping Duty Administrative Reviews*, 64 FR 55243, 55245 (Oct. 12, 1999) *(LNPP Preliminary 1997–1998)* followed in *Large Newspaper Printing Presses and Components Thereof, Whether Assembled or Unassembled, From Japan: Final Results of Antidumping Duty Administrative Review and Partial Rescission of Administrative Reviews*, 65 FR 7492, 7495 (Feb. 15, 2000) *(LNPP Final 1997–1998)*.

Constructed Export Price

For both MHI and TKS, we based the U.S. price on CEP, in accordance with sections 772(b), (c), and (d) of the Act, because: (1) the sales contracts were executed by the respondents' affiliated U.S. sales agents; and (2) the respondents' affiliated U.S. sales agents engaged in a broad range of activities including coordination of installation, testing, and technical service expenses, which we have classified as further manufacturing. For MHI, we revised the reported data based on our findings at verification.

A. MHI

We calculated CEP based on the packed, installed price to an unaffiliated customer in the United States. We made deductions from the starting price, where appropriate, for foreign inland freight charges, foreign brokerage and handling charges, Japanese export insurance, international freight expenses, marine insurance, U.S. Customs duty, U.S. brokerage and handling charges, U.S. inland freight, and U.S. inland insurance, in accordance with section 772(c)(2)(A) of the Act.

We made additional deductions from CEP, where appropriate, for warranty, imputed credit, direct training expenses, and U.S. indirect selling expenses, including indirect warranty expenses and other indirect selling expenses incurred by MHI and its U.S. affiliate associated with economic activity occurring in the United States, in accordance with section 772(d)(1) of the Act.

As in prior segments of this proceeding, we calculated an imputed credit expense by multiplying an interest rate by the net balance of production costs incurred, and progress payments made, during the construction period. MHI reported this expense using a U.S.-dollar-denominated, short-term interest rate for the entire balance, consistent with our imputed credit expense methodology that relies on the interest rate applicable to the currency in which the sale is made. MHI used interest rates obtained from the Federal Reserve in their credit calculation. However, we recalculated MHI's imputed credit expense calculation using the U.S. interest rate based on MLP U.S.A. Inc.'s actual borrowing experience rather than interest rates obtained from the Federal Reserve. For a detailed explanation of this analysis, see the calculation memorandum issued for the preliminary results of this review, dated September 29, 2000.

In addition, we deducted the cost of further manufacturing or assembly, including installation expenses, in accordance with section 772(d)(2) of the Act. We classified installation charges as part of further manufacturing, because the U.S. installation process involves extensive technical activities on the part of engineers and installation supervisors. *See Mitsubishi Heavy Industries* v. *United States*, 15 F. Supp. 2d 807, 815–16 (CIT 1998) *(Mitsubishi)*. We relied on MHI's reported amount for further manufacturing except that we revised the calculation of the further manufacturing general and administrative (G&A) expense rate by using weighted-averages of MLP U.S.A. Inc.'s company wide G&A expenses and costs of goods sold based on its December 31, 1998 and December 31, 1999 financial statements.

Pursuant to section 772(d)(3) of the Act, we further reduced the starting price by an amount for profit, to arrive at CEP. In accordance with section 772(f) of the Act, we calculated the CEP profit rate using the expenses incurred by MHI and its affiliate on their sales of the subject merchandise in the United States and the foreign like product in the home market and the profit associated with those sales.

B. TKS

We calculated CEP based on the packed price to an unaffiliated customer

in the United States. We made deductions from the starting price, where appropriate, for foreign inland freight to port in Japan, foreign brokerage and handling, Japanese export insurance, international freight expenses, marine insurance, U.S. Customs duty, U.S. brokerage and handling, and unloading expenses, in accordance with section 772(c)(2)(A) of the Act.

We made additional deductions from CEP, where appropriate, for warranty, imputed credit, direct training expenses, and U.S. indirect selling expenses, including other indirect selling expenses incurred by TKS and its U.S. affiliate associated with economic activity occurring in the United States, in accordance with section 772(d)(1) of the Act. We calculated an imputed credit expense using the same methodology as discussed above for MHI.

In addition, we deducted the cost of any further manufacturing or assembly, including testing and technical service expenses in accordance with section 772(d)(2) of the Act. We classified testing and technical service expenses as part of further manufacturing, because the U.S. installation process involves extensive technical activities on the part of engineers and installation supervisors *(see Mitsubishi)*.

Pursuant to section 772(d)(3) of the Act, we further reduced the starting price by an amount for profit, to arrive at CEP. In accordance with section 772(f) of the Act, we calculated the CEP profit rate using the expenses incurred by TKS and its affiliate on their sales of the subject merchandise in the United States and the foreign like product in the home market and the profit associated with those sales.

Normal Value

As noted above under the ''Normal Value Comparisons'' section of this notice, we based NV on CV in accordance with section 773 of the Act because we determined that the unique, custom-built nature of each LNPP sold does not permit proper price-to-price comparisons, even though the home market was viable for both respondents.

Cost of Production Analysis and Constructed Value

Pursuant to section 773(b)(2)(A)(ii) of the Act, there are reasonable grounds to believe or suspect MHI and TKS made sales in the home market at prices below their cost of production (COP) in this review because the Department disregarded certain sales made by MHI and TKS during the less-than-fair-value (LTFV) investigation and during the previous administrative reviews pursuant to a finding that sales were made below cost. *See Notice of Final Determination of Sales at Less Than Fair Value: Large Newspaper Printing Presses and Components Thereof, Whether Assembled or Unassembled, From Japan*, 61 FR 38139, 38145 (July 23, 1996); and *LNPP Preliminary 1997–1998*, 64 FR at 55246 followed in *LNPP Final 1997–1998*. As a result, the Department initiated investigations to determine whether the respondents made home market sales during the POR at prices below their COP within the meaning of section 773(b) of the Act.

We calculated the COP based on the sum of each respondent's cost of materials and fabrication for the foreign like product, plus amounts for G&A and financial expenses, in accordance with section 773(b)(3) of the Act.

We compared the COP figures to home market prices of the foreign like product, as required under section 773(b) of the Act, in order to determine whether these sales had been made at prices below the COP. On a contract-specific basis, we compared the COP to home market prices, less any applicable movement charges, direct and indirect selling expenses, and packing expenses.

In determining whether to disregard home market sales made at prices below the COP, we examined whether such sales were made: (1) in substantial quantities within an extended period of time; and (2) at prices which permitted the recovery of all costs within a reasonable period of time in the normal course of trade. *See* section 773(b)(1) of the Act.

The results of our cost tests for both MHI and TKS indicated that certain home market sales were at prices below COP within an extended period of time, were made in substantial quantities, and would not permit the full recovery of all costs within a reasonable period of time. In accordance with section 773(b)(1) of the Act, we therefore excluded the below-cost sales from our analysis and used the remaining above-cost sales as the basis for determining selling expenses and profit.

In accordance with section 773(e) of the Act, we calculated CV based on the sum of each respondent's cost of materials, fabrication, selling, general and administrative (SG&A) expenses and U.S. packing costs. In accordance with section 773(e)(2)(A), we based SG&A expenses and profit on the amounts incurred and realized by each respondent in connection with the production and sale of the foreign like product in the ordinary course of trade, for consumption in the foreign country.

Company-specific calculations are discussed below.

A. MHI

We relied on MHI's reported COP and CV amounts, except in the following instances in which the costs were not appropriately quantified or valued:

1. We revised the calculation of the G&A expense rate by including pension expenses and past service costs in the numerator of the calculation.
2. We further revised the calculation of the G&A expense rate by dividing the weighted-average of unconsolidated G&A expenses by the unconsolidated cost of goods sold from MHI's financial statements for the fiscal years ended March 31, 1999, and March 31, 2000.
3. We revised the calculation of the financial expense rate to exclude offsets from short-term interest income earned on accounts receivable.
4. We recalculated the financial expense rate (revised as noted above) using the weighted-average expenses and cost of sales from MHI's consolidated financial statements for the fiscal years ended March 31, 1999, and March 31, 2000.
5. We recalculated the calculation of the sundry expense rate using the weighted-average expenses and cost of sales from MHI's unconsolidated financial statements for the fiscal years ended March 31, 1999, and March 31, 2000.
6. We added the cost for spare parts to CV.

See the September 29, 2000, memorandum from Michael P. Harrison to Neal Halper entitled ''Constructed value calculation adjustments for the preliminary determination'' for further discussion.

For CEP to CV comparisons, where appropriate, we deducted imputed credit, in accordance with sections 773(a)(6)(C)(iii) and 773(a)(8) of the Act. We calculated imputed credit for CV purposes in accordance with the methodology explained in the ''Constructed Export Price'' section of this notice. We imputed credit expenses for CV using the weighted-average, yen-based, short-term interest rate reported for the POR, since home market sales were denominated in yen.

We made a CEP offset adjustment to NV, as explained below, in accordance with section 773(a)(7)(B) of the Act, by deducting the home market indirect selling expenses, including indirect training, warranty, and technical service expenses, up to the amount of indirect selling expenses incurred on U.S. sales. Where applicable, we offset any home market commission using the amount of indirect selling expenses incurred on

the U.S. sale remaining after the deduction for the CEP offset, up to the amount of the home market commission, in accordance with 19 CFR 351.410(e).

B. TKS

We relied on TKS's reported COP and CV amounts except that we revised the total cost of manufacturing to reflect the fixed overhead costs recorded in the company's normal books and records for the fiscal period when manufacturing took place. *See* the September 29, 2000, memorandum from LaVonne Jackson to Neal Halper entitled ''Cost of Production and Constructed Value Calculation Adjustments for the Preliminary Determination'' for further discussion.

For CEP to CV comparisons, where appropriate, we deducted imputed credit, in accordance with sections 773(a)(6)(C)(iii) and 773(a)(8) of the Act. We calculated imputed credit for CV purposes in accordance with the methodology explained in the ''Constructed Export Price'' section of this notice. We imputed credit expenses for CV using the weighted-average, yen-based, short-term interest rate reported for the POR, since home market sales were denominated in yen.

We also made a CEP offset adjustment to NV, as explained below, in accordance with section 773(a)(7)(B) of the Act, by deducting the home market indirect selling expenses, up to the amount of indirect selling expenses incurred on U.S. sales.

Level of Trade and CEP Offset

In accordance with section 773(a)(1)(B) of the Act, to the extent practicable, we determine NV based on sales in the comparison market at the same level of trade as the export price (EP) or CEP transaction. The NV level of trade is that of the starting-price sales in the comparison market or, when NV is based on CV, that of the sales from which we derive SG&A expenses and profit. For EP, the level of trade is also that of the starting-price sale, which is usually from exporter to importer. For CEP, it is the level of the constructed sale from the exporter to the importer, after the deductions required under section 772(d) of the Act.

To determine whether NV sales are at a different level of trade than EP or CEP sales, we examine stages in the marketing process and selling functions along the chain of distribution between the producer and the unaffiliated customer in the comparison market. If the comparison-market sales are at a different level of trade and the difference affects price comparability, as manifested in a pattern of consistent price differences between the sales on which NV is based and comparison-market sales at the level of trade of the export transaction, we make a level of trade adjustment under section 773(a)(7)(A) of the Act. Finally, for CEP sales, if the NV level is more remote from the factory than the CEP level and there is no basis for determining whether the difference in the levels between NV and CEP affects price comparability, we adjust NV under section 773(a)(7)(B) of the Act (the CEP-offset provision). *See Notice of Final Determination of Sales at Less Than Fair Value: Certain Cut-to-Length Carbon Steel Plate from South Africa*, 62 FR 61731 (Nov. 19, 1997).

We note that the U.S. Court of International Trade (CIT) has held that the Department's practice of determining levels of trade for CEP transactions after CEP deductions is an impermissible interpretation of section 772(d) of the Act. *See Borden, Inc.* v. *United States*, 4 F. Supp. 2d 1221, 1241–42 (CIT 1998) (*Borden*.) The Department believes, however, that its practice is in full compliance with the statute. On June 4, 1999, the CIT entered final judgement in *Borden* on the level of trade issue. *See Borden Inc.* v. *United States*, Court No. 96–08–01970, Slip Op. 99–50 (CIT June 4, 1999). The government has filed an appeal of Borden which is pending before the U.S. Court of Appeals for the Federal Circuit. Consequently, the Department has continued to follow its normal practice of adjusting CEP under section 772(d) prior to starting a level of trade analysis, as articulated by the Department's regulations at section 351.412.

Both MHI and TKS claimed that they made home market sales at only one level of trade (*i.e.*, direct sales to end users), which is more advanced than the level of trade in the U.S. market (*i.e.*, CEP sales to the U.S. affiliate). According to MHI and TKS, the level of trade in the home market is not comparable to the CEP level of trade because the majority of the selling functions with respect to their U.S. sales were performed by their U.S. affiliates at a more remote level of trade than those selling functions relating to their home market sales. The respondents also claimed that the selling functions between the two markets differ even further once the applicable selling expenses are deducted from the CEP starting price. Therefore, both MHI and TKS requested that the Department grant them a CEP offset under section 773(a)(7)(B) of the Act.

In order to determine whether NV was established at a different LOT than CEP sales, we examined stages in the marketing process and selling functions along the chains of distribution between the respondents and their home market customers. We compared the selling functions performed for home market sales with those performed with respect to the CEP transaction, exclusive of economic activities occurring in the United States, pursuant to section 772(d) of the Act, to determine if the home market level of trade constituted a different and more advanced stage of distribution than the CEP level of trade.

Both respondents reported that they sold through one channel of distribution in the home market, and through a different channel in the United States. In Japan, MHI and TKS sold subject merchandise directly to unaffiliated customers, while in the United States, they both sold the subject merchandise through their affiliates, MLP U.S.A., Inc. and TKS (U.S.A.), respectively, who then sold the subject merchandise directly to unaffiliated purchasers.

We compared the selling functions and the level of activity in each distribution channel for each respondent, and found that several of the functions performed in the comparison market either were not performed in connection with the U.S. sale at the export level of trade, or were performed at a significantly lower level of activity on the part of MHI or TKS.

Moreover, as we have determined that installation expenses incurred on the U.S. sales should be treated as further manufacturing expenses, the CEP after deduction for all expenses under section 772(d) of the Act reflects an uninstalled LNPP. Supporting this contention is the fact that many of the same selling functions that are performed at the comparison market level of trade are performed not at the export level of trade, but by the respondents' U.S. affiliates. Based on this analysis, we conclude that the comparison market and U.S. channels of distribution and the sales functions associated with each are sufficiently different so as to constitute two different levels of trade, and we find that the comparison market sales are made at a more advanced level of trade than are CEP sales. Because MHI and TKS made sales in the home market at only one level of trade, the difference in the level of trade cannot be quantified. Further, we do not have information which would allow us to examine pricing patterns based on the respondents' sales of other products, and there are no other respondents or other record information on which such an analysis could be based. Accordingly, because the data available do not form an appropriate basis for

making a level of trade adjustment, but the level of trade in the home market is at a more advanced stage of distribution than the level of trade of the CEP, we have made a CEP offset to NV in accordance with section 773(a)(7)(B) of the Act.

Currency Conversion

We made currency conversions, in accordance with section 773(A)(a) of the Act, based on the official exchange rates in effect on the dates of the U.S. sales as certified by the Federal Reserve Bank of New York.

Preliminary Results of Review

As a result of our review, we preliminarily determine that the following margins exist for the period September 1, 1998, through August 31, 1999:

Manufacturer/exporter	Percent margin
Mitsubishi Heavy Industries, Ltd ..	3.88
Tokyo Kikai Seisakusho, Ltd	0.00

The Department will disclose to parties the calculations performed in connection with these preliminary results within five days of the date of publication of this notice. Interested parties may request a hearing within 30 days of the publication. Any hearing, if requested, will be held 44 days after the publication of this notice, or the first workday thereafter. Interested parties may submit case briefs not later than 30 days after the date of publication of this notice. Rebuttal briefs, limited to issues raised in the case briefs, may be filed not later than 35 days after the date of publication of this notice. The Department will publish a notice of the final results of this administrative review, which will include the results of its analysis of issues raised in any such case briefs, within 120 days of the publication of these preliminary results.

Assessment Rates

Upon completion of this administrative review, the Department shall determine, and the Customs Service shall assess, antidumping duties on all appropriate entries. For assessment purposes, we calculated an importer-specific assessment rate for the subject merchandise by dividing the dumping margin calculated for the U.S. sale examined by the total entered value of the sale examined. Pursuant to 19 CFR 351.106(c)(2), we will instruct the Customs Service to liquidate without regard to antidumping duties all entries for any importer for whom the assessment rate is de minimis (*i.e.*, less than 0.50 percent). The Department will issue appraisement instructions directly to the Customs Service.

Cash Deposit Instructions

The following cash deposit requirements will be effective for all shipments of the subject merchandise entered, or withdrawn from warehouse, for consumption on or after the publication date of the final results of this administrative review, as provided by section 751(a)(1) of the Act: (1) the cash deposit rates for MHI and TKS will be those established in the final results of this review, except if the rate is less than 0.50 percent, and therefore, *de minimis* within the meaning of 19 CFR 351.106(c)(1), in which case the cash deposit rate will be zero; (2) for previously reviewed or investigated companies not listed above, the cash deposit rate will continue to be the company-specific rate published for the most recent period; (3) if the exporter is not a firm covered in this review, a prior review, or the original LTFV investigation, but the manufacturer is, the cash deposit rate will be the rate established for the most recent period for the manufacturer of the merchandise; and (4) the cash deposit rate for all other manufacturers or exporters will continue to be 58.69 percent, the ''All Others'' rate made effective by the LTFV investigation. These requirements, when imposed, shall remain in effect until publication of the final results of the next administrative review.

This notice also serves as a preliminary reminder to importers of their responsibility under 19 CFR 351.402(f) to file a certificate regarding the reimbursement of antidumping duties prior to liquidation of the relevant entries during these review periods. Failure to comply with this requirement could result in the Secretary's presumption that reimbursement of antidumping duties occurred and the subsequent assessment of double antidumping duties.

We are issuing and publishing this determination in accordance with sections 751(a)(1) and 777(i)(1) of the Act.

Dated: September 29, 2000.

Troy H. Cribb,

Acting Assistant Secretary for Import Administration.

[FR Doc. 00–25790 Filed 10–18–00; 8:45 am]

BILLING CODE 3510–DS–P

DEPARTMENT OF COMMERCE

National Oceanic and Atmospheric Administration

[I.D. 101200E]

Pacific Fishery Management Council; Public Meeting

AGENCY: National Marine Fisheries Service (NMFS), National Oceanic and Atmospheric Administration (NOAA), Commerce.

ACTION: Notice of public meeting.

SUMMARY: The Pacific Fishery Management Council's (Council) Highly Migratory Species Plan Development Team (HMSPDT) will hold a work session which is open to the public.

DATES: The work session will be Tuesday, November 14, 2000, 8 a.m. to 5 p.m.; Wednesday, November 15, 2000, 8 a.m. to 5 p.m.; and Thursday, November 16, 2000, from 8 a.m. until business for the day is completed.

ADDRESSES: The work session will be held in the large conference room at NMFS Southwest Fisheries Science Center, 8604 La Jolla Shores Drive, Room D-203, La Jolla, CA 92038-0271; telephone: (619) 546-7000.

Council address: Pacific Fishery Management Council, 2130 SW Fifth Avenue, Suite 224, Portland, OR 97201.

FOR FURTHER INFORMATION CONTACT: Dan Waldeck, Pacific Fishery Management Council; (503) 326-6352.

SUPPLEMENTARY INFORMATION: The primary purpose of the work session is to continue development of the draft fishery management plan (FMP) for highly migratory species (HMS). Specific agenda topics may include: species landed by HMS gears, bycatch species, data collection species, management issues and options, research and data collection programs, and review of draft FMP sections.

Management measures that may be adopted in the FMP for HMS fisheries off the West Coast include permit and reporting requirements for commercial and recreational harvest of HMS resources, time and/or area closures to minimize gear conflicts or bycatch, adoption or confirmation of state regulations for HMS fisheries, and allocations of some species to noncommercial use. The FMP is likely to include a framework management process to add future new measures, including the potential for collaborative management efforts with other regional fishery management councils with interest in HMS resources. It would also include essential fish habitat and habitat areas of particular concern, including

fishing and nonfishing threats, as well as other components of FMPs required under the Magnuson-Stevens Fishery Conservation and Management Act (Magnuson-Stevens Act).

The proposed FMP and its associated regulatory analyses would be the Council's fourth FMP for the exclusive economic zone off the West Coast. Development of the FMP is timely, considering the new mandates under the Magnuson-Stevens Act, efforts by the United Nations to promote conservation and management of HMS resources through domestic and international programs, and the increased scope of activity of the Inter-American Tropical Tuna Commission in HMS fisheries in the eastern Pacific Ocean.

Although non-emergency issues not contained in the HMSPDT meeting agenda may come before the HMSPDT for discussion, those issues may not be the subject of formal HMSPDT action during these meetings. HMSPDT action will be restricted to those issues specifically listed in this document and any issues arising after publication of this document that require emergency action under section 305(c) of the Magnuson-Stevens Act, provided the public has been notified of the HMSPDT's intent to take final action to address the emergency.

Special Accommodations

The meeting is physically accessible to people with disabilities. Requests for sign language interpretation or other auxiliary aids should be directed to Ms. Carolyn Porter at (503) 326-6352 at least 5 days prior to the meeting date.

Dated: October 12, 2000.

Richard W. Surdi,

Acting Director, Office of Sustainable Fisheries, National Marine Fisheries Service.

[FR Doc. 00–26939 Filed 10–18–00; 8:45 am]

BILLING CODE 3510–22–S

DEPARTMENT OF COMMERCE

National Oceanic and Atmospheric Administration

[Docket No. 000817236-0236-01; I.D. 091100B]

RIN 0648-ZA92

General Grant Administration Terms and Conditions of the CoastalOcean Program

AGENCY: Center for Sponsored Coastal Ocean Research/Coastal Ocean Program (CSCOR/COP), National Ocean Service (NOS), National Oceanic and Atmospheric Administration (NOAA), Commerce.

ACTION: Notice for financial assistance for project research grants and cooperative agreements.

SUMMARY: It is the intent of NOAA/NOS/CSCOR/COP to provide direct financial assistance in the form of discretionary research grants and cooperative agreements under its program for the management of coastal ecosystems.

This document does not solicit proposals but rather describes the general grant administration terms and conditions of the CSCOR/COP program for fiscal year 2001. It is CSCOR/COP's intent to issue supplemental Announcements of Opportunities (AOs) to request proposals on specific projects throughout the year on an as-needed basis. Any AOs will be issued through the Federal Register. Information regarding these announcements will be made available on the CSCOR/COP Home Page and CSCOR/COP's e-mail list. These announcements will provide specific program descriptions.

CSCOR/COP supports research on critical issues that exist in the Nation's estuaries, coastal waters, and the Great Lakes and translates research findings into accessible information for coastal managers, planners, lawmakers, and the public. CSCOR/COP's projects are multi-disciplinary, large in scale, and long in duration (usually 3 to 5 years.) Projects covering more than 1 year will usually be funded on an annual basis.

DATES: Effective October 19, 2000.

ADDRESSES: Center for Sponsored Coastal Ocean Research/Coastal Ocean Program, National Oceanic and Atmospheric Administration, 1315 East West Highway, Room 9700, Silver Spring, MD 20910-3282

FOR FURTHER INFORMATION CONTACT: Leslie McDonald, CSCOR/COP Grants Administrator,(301)713-3338/x137.

NOAA Standard Form and COP-specific application forms are accessible with instructions on the following COP Internet Site: http://www.cop.noaa.gov, under the COP Grants Support section, Part D, Application Forms for Initial Proposal Submission. If you are unable to access this information, you may call COP at 301-713-3338 to leave a mailing request. Further information on this program may be viewed at the same web site.

SUPPLEMENTARY INFORMATION:

Background

(1) *Program Authority(s)*: 16 U.S.C 1456c, 33 U.S.C 1121 *et seq.*; 33 U.S.C 883a *et seq.*; 33 U.S.C 1442; and Pub. L. 105-383.

(2) *Catalog of Federal Domestic Assistance (CFDA)*: 11.478 Coastal Ocean Program.

(3) *Program Description*: NOAA's CSCOR/COP provides predictive capability for managing coastal ecosystems through sponsorship of research. CSCOR/COP seeks to deliver the highest quality science in a timely manner for important coastal decisions. It supports research on critical issues that exist in the Nation's estuaries, coastal waters, and Great Lakes and translates its findings into accessible information for coastal managers, planners, lawmakers, and the public. The COP also supports educational activities at the graduate and undergraduate level to facilitate the development of qualified professionals in the fields of coastal science, management, and policy.

Coastal Ecosystem Oceanography

CSCOR/COP supports the conservation and management of marine ecosystems through sponsorship of improved ecological and oceanographic predictions for resource management. Studies focus on (1) understanding critical processes that control the abundance, distribution, and replenishment of fishery resources; (2) determining critical habitat processes that influence fishery ecosystems; and (3) quantifying ecosystem species interactions to develop models that can be used in management decisions. Current efforts support studies dealing with Bering Sea pollock, cod and haddock on Georges Bank, salmon in the Pacific Northwest, and the finfish and shellfish resources of the Gulf of Mexico.

Cumulative Coastal Impacts

CSCOR/COP sponsors a series of regional watershed projects on the causes and impacts of multiple stresses on coastal ecosystems. Studies focus on (l) developing indicators of stress; (2) predicting impacts of multiple stresses (3) valuing natural resources in ecological and economical terms; and (4) predicting the outcomes of management strategies. Current efforts are located in Chesapeake Bay, Florida Bay and the Keys, the Great Lakes and coastal areas of South Carolina, the Pacific Northwest, and coral reefs in Florida and Hawaii.

Harmful Algal Blooms (HABs) and Hypoxia

CSCOR/COP also sponsors studies on the ecology and oceanography of harmful algal blooms (HABs), focusing on identifying and modeling linkages between the physiology, ecology,

behavior and toxicity of HABs and local/regional circulation patterns and water quality. These results will not only generate greater general knowledge of problematic species in the U.S. coastal waters, but also provide a foundation for development of regional HAB forecasting capabilities, eventually providing a means to assess the effectiveness of prevention, control, and mitigation strategies developed in the programs. Current regional efforts are located in the Gulf of Maine, eastern Long Island, the coastal regions of the mid-Atlantic States, and the western coast of Florida.

Eutrophication and resulting hypoxia have become common problems affecting living marine resources and recreational uses of coastal waters. The CSCOR/COP supports research examining the influences of nutrient loading, physical forcing, climate change, and extent of hypoxic conditions (i.e., the ''dead zone'') on the ecosystem and fisheries of the northern Gulf of Mexico.

Benefits of the CSCOR/COP

Continued population pressures on the Nation's coastal areas and ongoing changes in the environment will continue to stress our coastal waters, bays, and estuaries and the Great Lakes. CSCOR/COP has focused on developing information for longer range U.S. management and policy at large and complex scales. CSCOR/COP research will help the U.S. respond to the major challenges of the next century and to balance the needs of economic growth with those of conserving the environment and its coastal resources.

(4) *Funding Availability*: On average, annual funding for each Announcement of Opportunity is approximately $l,000,000. Each CSCOR/COP project generally consists of several coordinated investigations with separate awards, ranging from $5,000 to $500,000. Actual funding levels will depend upon the final budget appropriations for the fiscal year. Individual AOs will be released with specific applicable dollar amounts.

The financial history of CSCOR/COP grants, interagency agreements, and intra-NOAA funding transfers is as follows: FY97 $10.00M; FY98 $8.5M; FY99 $8.5M, and FY00 $8.5M. Publication of this notice does not obligate Commerce/NOAA to any specific award or to obligate any part of the entire amount of funds available. Recipients and subrecipients are subject to all Federal laws and agency policies, regulations, and procedures applicable to Federal financial assistance awards.

If an application for a financial assistance award is selected for funding, CSCOR/COP has no obligation to provide any additional prospective funding in connection with that award in subsequent years.

(5) *Matching Requirements*: None.

(6) *Type of Funding Instrument*: They are project grants and cooperative agreements, interagency agreements and transfers, and intra-NOAA funding transfers.

In an effort to maximize the use of limited resources, applications from non-Federal, non-NOAA Federal and NOAA applicants will be competed against each other. Research proposals selected for funding from non-Federal researchers will be funded through a project grant. Research proposals selected for funding from non-NOAA Federal applicants will be funded through an interagency transfer, provided legal authority exists for the Federal applicant to receive funds from another agency. Support may be solely through COP or partnered with other Federal offices and agencies.

(7) *Eligibility Criteria*: CSCOR/COP funding opportunities are open to all interested, qualified, non-Federal, and Federal researchers. Researchers must be affiliated with a not-for-profit institution, and proposals must be submitted through a not-for-profit institution. Non-Federal researchers should comply with their institutional requirements for proposal submission.

Non-NOAA Federal applicants will be required to submit certifications or documentation showing that they have specific legal authority to receive funds from the Department of Commerce (DOC) for this research. Foreign researchers must subcontract with U.S. proposers. Non-Federal researchers affiliated with NOAA-University Joint Institutes should comply with joint institutional requirements; they will be funded through grants either to their institutions or to joint institutes.

Proposals deemed acceptable from Federal researchers will be funded through a mechanism other than a grant or cooperative agreement, where legal authority allows for such funding. DOC requirements will prevail if there is a conflict between DOC requirements and institutional requirements.

(8) *Award Period*: Typically, CSCOR/COP's projects average 1 to 5 years in length. Projects covering more than 1 year will usually be funded on an annual basis.

(9) *Application Forms*: When applying for financial assistance under a published AO, applicants will be able to obtain both the standard NOAA application forms and COP-specific application forms at the COP home page. Forms may be viewed and, in most cases, filled in by computer. All forms must be printed, completed, and mailed to CSCOR/COP with original signatures in blue ink. If you are unable to access this information, you may also call (301)713-3338 to leave a mail request. At time of submission, the applicant will follow the proposal requirements presented in the funding announcement.

At time of original application for financial assistance, all proposers are required to submit the NOAA Standard Form 424 (Rev July 1997), ''Application for Federal Assistance'' and a COP Summary Proposal Budget Form for each fiscal year increment in lieu of the NOAA Standard Form 424A (Rev July 1997),''Budget Information for Non-Construction Programs.'' Applicants shall also include a budget narrative/justification that supports all proposed budget categories. The SF-424A shall be requested only those recipients subsequently recommended for award.

Multi-institution proposals must include a Summary Proposal Budget Form from each institution. Applications not adhering to these stated guidelines will be returned to the applicant without further review.

In addition, other forms required as part of a complete application package from only those recipients subsequently recommended for award include the NOAA Standard Form 424-B, ''Assurances for Non-Construction Programs''; the CD-511, ''Certifications Regarding Debarment, Suspension and Other Responsibility Matters; Drug-Free Workplace Requirements and Lobbying''; the CD-512, ''Certification Regarding Debarment, Suspension, Ineligibility and Voluntary Exclusion-Lower Tier Covered Transactions and Lobbying'' (this certification is to remain with the recipient and is not forwarded to the Grants Officer); and the SF-LLL,''Disclosure of Lobbying Activities'' (if applicable).

(10) *Project Funding Priorities*: Priority considerations will be given to proposals that promote balanced coverage of the science objective stated in the later AOs, avoid duplication of completed or ongoing work, and increase geographic diversity. Additional and/or other priorities may be detailed in CSCOR/COP AOs.

(11) *Evaluation Criteria*: Unless otherwise stated in an individual funding announcement, the following criteria and evaluation weightings will be used for evaluating both solicited and unsolicited proposals:

(a) Scientific Merit (20 percent): Intrinsic scientific value of the proposed work and the likelihood that it will lead to fundamental advancements, new

discoveries or will have substantial impact on progress in that field;

(b) Research Performance Competence (20 percent): The capability of the investigator and collaborators to complete the proposed work as evidenced by past research accomplishments, previous cooperative work, timely communication, and the sharing of findings, data, and other research products;

(c) Relevance (20 percent): Likelihood that the research will make substantial contributions or develop products leading to improved management of coastal resources;

(d) Technical Approach (20 percent): The proposed work has focused science objectives and a complete and efficient strategy for making measurements and observations in support of the objectives. The approach is sound and logically planned throughout the cycle of the proposed work;

(e) Linkages (10 percent): Connections to existing or planned studies, or demonstrated cooperative arrangements to provide or use data or other research results to achieve the objectives.

(f) Costs (10 percent): Adequacy of the proposed resources to accomplish the proposed work, and the appropriateness of the requested funding with respect to the total available funds.

(12) *Selection Procedures*: All proposals will be evaluated and ranked individually in accordance with the assigned weights of the above evaluation criteria by independent peer mail review and/or by independent peer panel review. Both Federal and non-Federal experts in the field may be used in this process. The peer mail reviewers will be several individuals with expertise in the subjects addressed by particular proposals. Each mail reviewer will see only certain individual proposals within his or her area of expertise, and rank them individually on a scale of one to five, where scores represent respectively: Excellent, Very Good, Good, Fair, Poor.

The peer panel will comprise of 6 to 12 individuals, with each individual having expertise in a separate area, so that the panel, as a whole, covers a range of scientific expertise. The panel will have access to all mail reviews of proposals, and will use the mail reviews in discussion and evaluation of the entire slate of proposals.

The program officer(s) will neither vote or rank proposals as part of the independent peer panel nor participate in discussion of the merits of the proposal. Those proposals receiving an average panel rank of ''Fair'' or ''Poor'' will not be given further consideration, and proposers will be notified of non-selection.

For the proposals rated by the panel as either ''Excellent,'' ''Very Good,'' or ''Good'', the program managers will ,first, select the proposals to be recommended for funding by applying the project funding priorities listed in section 10 and specific objectives published in the AO; second, determine the total duration of funding for each proposal; and, third, determine the amount of funds available for each proposal. Because of consideration of the project funding priorities, awards may not necessarily be made in rank order.

Investigators may be asked to modify objectives, work plans or budgets, and provide supplemental information required by the agency prior to the award. When a decision has been made (whether an award or declination), verbatim anonymous copies of reviews and summaries of review panel deliberations, if any, will be made available to the proposer.

(13) *Other Requirements*:

(a) Federal Policies and Procedures: Recipients and subrecipients are subject to all Federal laws and Federal and DOC policies, regulations, and procedures applicable to Federal financial assistance awards.

(b) Past Performance: Unsatisfactory performance by a recipient under prior Federal awards may result in an application not being considered for funding.

(c) Preaward Activities: If applicants incur any costs prior to an award being made, they do so solely at their own risk. Notwithstanding any verbal assurance that they may have received regarding an award, there is no obligation on the part of the Department of Commerce to cover pre-award expenditures unless approved by the Grants Officer, in writing, as part of the terms when the award is made.

(d) No Obligation for Future Funding: If an application is selected for funding, DOC/NOAA has no obligation to provide any additional future funding in connection with that award. Amendment of an award to increase funding or, unless the award specifically provides to the contrary, to extend the period of performance is at the total discretion of DOC/NOAA.

(e) Delinquent Federal Debts: No award of Federal funds shall be made to an applicant who has an outstanding delinquent Federal debt until:

(i) The delinquent account is paid in full.

(ii) A negotiated repayment schedule is established, and at least one payment is received, or

(iii) Other arrangements satisfactory to the Department of Commerce are made.

(f) Name Check Review: All non-profit and for-profit applicants are subject to a name check review process. Name checks are intended to reveal if any key individuals associated with the applicant have been convicted of, or are presently facing criminal charges such as fraud, theft, perjury, or other matters that significantly reflect on the applicant's management honesty or financial integrity.

(g) Debarment, Suspension, Drug-Free Workplace, and Lobbying Provisions: All applicants must comply with the requirements of l5 CFR part 26, ''Government-wide Debarment and Suspension (nonprocurement) and Government-wide Requirements for Drug-Free Workplace (Grants)'' and with l5 CFR part 28, ''New Restrictions on Lobbying,'' including the submission of required forms and the acquisition of certifications from lower tier applicants/bidders.

(h) False Statements: A false statement on an application is grounds for denial or termination of funds andgrounds for possible punishment by a fine or imprisonment as provided in 18 U.S.C. l00l.

(i) Intergovernmental Review: Applications under this program are not subject to Executive Order l2372, ''Intergovernmental Review of Federal Programs.''

(j) Executive Order 12866: This action was determined to be not significant for purposes of Executive Order 12866.

(k) Minority Serving Institutions: Pursuant to Executive Orders 12876, 12900, and 13021, the Department of Commerce, National Oceanic and Atmospheric Administration (DOC/NOAA), is strongly committed to broadening the participation of Historically Black Colleges and Universities, Hispanic Serving Institutions, and Tribal Colleges and Universities in its educational and research programs. The DOC/NOAA vision, mission, and goals are to achieve full participation by Minority Serving Institutions (MSI) in order to advance the development of human potential, to strengthen the nation's capacity to provide high-quality education, and to increase opportunities for MSIs to participate in, and benefit from, Federal Financial Assistance programs. DOC/NOAA encourages all applicants to include meaningful participation of MSIs.

(l) Buy America: Applicants are hereby notified that they are encouraged, to the greatest practicable extent, to purchase American-made

equipment and products with funding provided under this program.

(m) Data Archiving: Any data collected in projects supported by CSCOR/COP must be delivered to a National Data Center (NDC), such as the National Oceanographic Data Center (NODC), in an electronic format to be determined by the institution, the NODC, and Program Officer. It is the responsibility of the institution for the delivery of these data; the DOC will not provide additional support for delivery beyond the award. Additionally, all biological cultures established, molecular probes developed, genetic sequences identified, mathematical models constructed, or other resulting information products established through support provided by CSCOR/COP must be made available to the general research community at no or modest handling charge (to be determined by the institution, Program Officer, and DOC). For more details, refer to CSCOR/COP data policy posted at the COP home page.

(n) Please note that NOAA is developing a policy on internal overhead charges, NOAA scientists considering submission of proposals should contact the appropriate CSCOR/COP Program Manager for the latest information.

(o) Paperwork Reduction Act: This notification involves collection-of-information requirements subject to the Paperwork Reduction Act. The use of Standard Forms 424, 424A, 424B, and SF-LLL has been approved by the Office of Management and Budget (OMB) under control numbers 0348-0043, 0348-0044, 0348-0040 and 0348-0046.

The COP Grants Application Package has been approved by OMB under control number 0648-0384 and includes the following information collections: a Summary Proposal Budget Form, a Project Summary Form, standardized formats for the Annual Performance Report and the Final Report, and the submission of up to 20 copies of proposals. Copies of these forms and formats can be found on the COP Home Page.

Notwithstanding any other provision of law, no person is required to respond to, nor shall any person be subject to a penalty for failure to comply with a collection of information subject to the requirements of the Paperwork Reduction Act, unless that collection displays a currently valid OMB control number.

Dated: October 12, 2000.

Margaret A. Davidson,

Acting Assistant Administrator for Ocean Services and Coastal Zone Management.

[FR Doc. 00–26937 Filed 10–18–00; 8:45 am]

BILLING CODE 3510–JS–S

DEPARTMENT OF COMMERCE

National Oceanic and Atmospheric Administration

[I.D. 101200D]

South Atlantic Fishery Management Council; Public Meeting

AGENCY: National Marine Fisheries Service (NMFS), National Oceanic and Atmospheric Administration (NOAA), Commerce.

ACTION: Notice of public meetings.

SUMMARY: The South Atlantic Fishery Management Council's (Council) Scientific and Statistical Committee (SSC) will meet.

DATES: The SSC meeting will be held on November 8, 2000, from 1:30 p.m. to 5 p.m., and on November 9, 2000, from 9 a.m. to 3 p.m.

ADDRESSES: The meetings will be held at the Town & Country Inn, 2008 Savannah Highway, Charleston, SC 29407; telephone: (843) 571-1000 or 1-800/334-6660.

FOR FURTHER INFORMATION CONTACT: Kim Iverson, Public Information Officer, telephone: (843) 571-4366; fax: (843) 769-4520; email: kim.iverson@noaa.gov.

SUPPLEMENTARY INFORMATION: The SSC will review and provide comments and guidance on the following: proposed Maximum Sustainable Yield and overfishing definitions to meet Sustainable Fisheries Act requirements; presentations on population assessments and age/growth comparisons for white grunt off the Southeastern coast and age, growth and mortality of gray snapper from the East coast of Florida; status of the vessel capacity program; a report on the status of the spiny lobster fishery in Florida; the status of the Council's activities regarding marine reserves; the rock shrimp limited entry options paper; a report on an ethnographic social network tracing study; a report on the Council/NMFS cost and returns study; and a review of the information available on the use of powerheads to harvest snapper/grouper species.

Although non-emergency issues not contained in this agenda may come before this group for discussion, those issues may not be the subject of formal action during this meeting. Action will be restricted to those issues specifically identified in this notice and any issues arising after publication of this notice that require emergency action under section 305(c) of the Magnuson-Stevens Fishery Conservation and Management Act, provided the public has been notified of the Council's intent to take final action to address the emergency.

Special Accommodations

These meetings are physically accessible to people with disabilities. Requests for sign language interpretation or other auxiliary aids should be directed to the Council office (see **ADDRESSES**) by October 30, 2000.

Dated: October 12, 2000.

Richard W. Surdi,

Acting Director, Office of Sustainable Fisheries, National Marine Fisheries Service.

[FR Doc. 00–26938 Filed 10–18–00; 8:45 am]

BILLING CODE 3510–22–S

DEPARTMENT OF COMMERCE

National Oceanic and Atmospheric Administration

[I.D. 101200B]

Endangered Species; Permits

AGENCY: National Marine Fisheries Service (NMFS), National Oceanic and Atmospheric Administration (NOAA), Commerce.

ACTION: Receipt of application for a research/enhancement permit (1266); issuance of permits (1236, 1200, 1258).

SUMMARY: Notice is hereby given of the following actions regarding permits for takes of endangered and threatened species for the purposes of scientific research and/or enhancement: NMFS has received a research/enhancement permit application from John Glass of REMSA, Inc. (REMSA) (1266); and NMFS has issued permits to: Dr. Jack Musick, Virginia Institute of Marine Science (VIMS) (1236); David Stier, Springfield Science Museum (SSM) (1200) and David Jones, North Carolina Zoological Park (NCZoo)(1258).

DATES: Comments or requests for a public hearing on any of the new applications or modification requests must be received at the appropriate address or fax number no later than 5 pm eastern standard time on November 20, 2000.

ADDRESSES: Written comments on any of the new applications or modification requests should be sent to the appropriate office as indicated below. Comments may also be sent via fax to the number indicated for the application

or modification request. Comments will not be accepted if submitted via e-mail or the Internet. The applications and related documents are available for review in the indicated office, by appointment:

Endangered Species Division, Office of Protected Resources, NMFS, 1315 East-West Highway, Silver Spring, MD, 20910 301-713-1401.

FOR FURTHER INFORMATION CONTACT: Terri Jordan (ph: 301-713-1401, fax: 301-713-0376, e-mail: Terri.Jordan@noaa.gov).

SUPPLEMENTARY INFORMATION:

Authority

Issuance of permits and permit modifications, as required by the Endangered Species Act of 1973 (16 U.S.C. 1531-1543) (ESA), is based on a finding that such permits/modifications: (1) are applied for in good faith; (2) would not operate to the disadvantage of the listed species which are the subject of the permits; and (3) are consistent with the purposes and policies set forth in section 2 of the ESA. Authority to take listed species is subject to conditions set forth in the permits. Permits and modifications are issued in accordance with and are subject to the ESA and NMFS regulations governing listed fish and wildlife permits (50 CFR parts 222-226).

Those individuals requesting a hearing on an application listed in this notice should set out the specific reasons why a hearing on that application would be appropriate (see **ADDRESSES**). The holding of such hearing is at the discretion of the Assistant Administrator for Fisheries, NOAA. All statements and opinions contained in the permit action summaries are those of the applicant and do not necessarily reflect the views of NMFS..

Species Covered in This Notice

The following species are covered in this notice:

Sea Turtles

Green turtle (*Chelonia mydas*), Hawksbill turtle (*Eretmochelys imbricata*), Kemp's ridley turtle (*Lepidochelys kempii*), Leatherback turtle (*Dermochelys coriacea*), Loggerhead turtle (*Caretta caretta*).

Fish

Shortnose Sturgeon (*Acipenser brevirostrum*)

New Applications Received

Application 1266: The applicant has requested a 5-year permit to take 30 loggerhead; seven green; five Kemp's ridley; four hawksbill and four leatherback turtles from the Atlantic Ocean and Gulf of Mexico in conjunction with US Army Corps of Engineer Dredging projects for scientific research and enhancement purposes.

Permits Issued

Permit 1236: Notice was published on April 14, 2000 (65 FR 20138), that NMFS received an application from VIMS for a research permit. The applicant requested a 5-year permit to take listed sea turtles in the coastal waters of the US Virgin Islands. Research conducted in the US Virgin Islands will study habitat utilization of juvenile Hawksbill turtles at the Buck Island Reef National Monument off of St. Croix, USVI. The study will capture, handle, tag (PIT, flipper, satellite, radio and acoustic), collect biological samples (via humeral bone biopsy, blood samples and laparoscopy) and release loggerhead, green , Kemp's ridley, hawksbill and leatherback turtles. Permit 1236 was issued on October 10, 2000, authorizing take of listed species. Permit 1236 expires June 30, 2005.

Permit 1200: Notice was published on February 19, 1999 (64 FR 8331), that the SSM applied for a enhancement permit (1200). The applicant had requested permission to maintain up to five (5) endangered shortnose sturgeon in captivity for educational purposes. The sturgeon will be captive sturgeon received from the Conte Anadromous Research Center that have been classified as ''non-releasable'' by NMFS. Permit 1200 was issued on October 12, 2000, authorizing take of listed species. Permit 1200 expires September 30, 2005.

Permit 1258: Notice was published on June 9, 2000 (65 FR 36666), that the NCZoo applied for a enhancement permit (1258). The applicant requested a 5-year permit to continue to maintain four (4) adult shortnose sturgeon in captivity for enhancement purposes. The NCZoo currently possesses four adult shortnose sturgeon received from the US Fish and Wildlife Service hatchery at Warm Springs Georgia in November 1996 under scientific research permit #986. These sturgeon have been classified as ''non-releasable'' by NMFS. Permit 986 will expire on December 31, 2000 and the permit holder does not wish to renew the enhancement aspects of his permit. As a direct result, the North Carolina Zoological Park is applying for an individual permit to continue maintenance of these fish. Permit 1258 was issued on October 12, 2000, authorizing take of listed species. Permit 1258 expires July 31, 2005.

Dated: October 12, 2000.

Wanda L. Cain,

Chief, Endangered Species Division, Office of Protected Resources, National Marine Fisheries Service.

[FR Doc. 00–26941 Filed 10–18–00; 8:45 am]

BILLING CODE 3510–22–S

DEPARTMENT OF COMMERCE

National Oceanic and Atmospheric Administration

[I.D. 101100B]

Permits; Foreign Fishing

AGENCY: National Marine Fisheries Service (NMFS), National Oceanic and Atmospheric Administration (NOAA), Commerce.

ACTION: Notice of receipt of foreign fishing application.

SUMMARY: NMFS publishes for public review and comment a summary of an application submitted by the Government of the Russian Federation requesting authorization to conduct fishing operations in the U.S. Exclusive Economic Zone (EEZ) in 2001 under provisions of the Magnuson-Stevens Fishery Conservation and Management Act (Magnuson-Stevens Act).

ADDRESSES: Comments may be submitted to NMFS, Office of Sustainable Fisheries, International Fisheries Division, 1315 East-West Highway, Silver Spring, MD 20910; and/or to the Regional Fishery Management Councils listed here:

Paul J. Howard, Executive Director, New England Fishery Management Council, 50 Water Street, Mill 2, Newburyport, MA 01905, Phone (978) 465-0492, Fax (978) 465-3116;

Daniel T. Furlong, Executive Director, Mid-Atlantic Fishery Management Council, Federal Building, Room 2115, 300 South New Street, Dover, DE 19904, Phone (302) 674-2331, Fax (302) 674-4136.

FOR FURTHER INFORMATION CONTACT: Robert A. Dickinson, Office of Sustainable Fisheries, (301) 713-2276.

SUPPLEMENTARY INFORMATION: In accordance with a Memorandum of Understanding with the Secretary of State, NMFS publishes, for public review and comment, summaries of applications received by the Secretary of State requesting permits for foreign fishing vessels to fish in the U.S. EEZ under provisions of the Magnuson-Stevens Act (16 U.S.C. 1801 *et seq.*).

This notice concerns the receipt of an application from the Government of the Russian Federation requesting

authorization to conduct joint venture (JV) operations in 2001 in the Northwest Atlantic Ocean for Atlantic mackerel and Atlantic herring. The large stern trawler/processors BREEZE, PASSAT and VASILIY LOZOVSKIY are identified as the Russian vessels that would receive Atlantic mackerel and Atlantic herring from U.S. vessels in JV operations. The application also requests an allocation of 1,000 metric tons (mt) of Atlantic mackerel and 2,000 mt of Atlantic herring for harvest by the VASILIY LOZOVSKIY in 2001.

Dated: October 12, 2000.

Bruce C. Morehead,

Acting Director, Office of Sustainable Fisheries, National Marine Fisheries Service.

[FR Doc. 00–26940 Filed 10–18–00; 8:45 am]

BILLING CODE 3510–22–S

COMMITTEE FOR THE IMPLEMENTATION OF TEXTILE AGREEMENTS

Adjustment of Import Limits for Certain Cotton and Man-Made Fiber Textile Products Produced or Manufactured in Nepal

October 13, 2000.

AGENCY: Committee for the Implementation of Textile Agreements (CITA).

ACTION: Issuing a directive to the Commissioner of Customs adjusting limits.

EFFECTIVE DATE: October 20, 2000.

FOR FURTHER INFORMATION CONTACT: Roy Unger, International Trade Specialist, Office of Textiles and Apparel, U.S. Department of Commerce, (202) 482–4212. For information on the quota status of these limits, refer to the Quota Status Reports posted on the bulletin boards of each Customs port, call (202) 927–5850, or refer to the U.S. Customs website at http://www.customs.gov. For information on embargoes and quota re-openings, call (202) 482–3715.

SUPPLEMENTARY INFORMATION:

Authority: Section 204 of the Agricultural Act of 1956, as amended (7 U.S.C. 1854); Executive Order 11651 of March 3, 1972, as amended.

The current limits for certain categories are being adjusted for swing, carryover, carryforward and special carryforward.

A description of the textile and apparel categories in terms of HTS numbers is available in the CORRELATION: Textile and Apparel Categories with the Harmonized Tariff Schedule of the United States (see **Federal Register** notice 64 FR 71982, published on December 22, 1999). Also see 64 FR 54871, published on October 8, 1999.

Richard B. Steinkamp,

Acting Chairman, Committee for the Implementation of Textile Agreements.

Committee for the Implementation of Textile Agreements

October 13, 2000.

Commissioner of Customs,

Department of the Treasury, Washington, DC 20229.

Dear Commissioner: This directive amends, but does not cancel, the directive issued to you on October 4, 1999, by the Chairman, Committee for the Implementation of Textile Agreements. That directive concerns imports of certain cotton and man-made fiber textile products, produced or manufactured in Nepal and exported during the twelve-month period which began on January 1, 2000 and extends through December 31, 2000.

Effective on October 20, 2000, you are directed to adjust the current limits for the following categories, as provided for under the terms of the current bilateral textile agreement between the Governments of the United States and Nepal:

Category	Adjusted twelve-month limit [1]
341	1,145,018 dozen.
347/348	1,038,829 dozen.
363	9,057,676 numbers.
369–S [2]	1,042,461 kilograms.
640	159,278 dozen.

[1] The limits have not been adjusted to account for any imports exported after December 31, 1999.

[2] Category 369–S: only HTS number 6307.10.2005.

The Committee for the Implementation of Textile Agreements has determined that these actions fall within the foreign affairs exception of the rulemaking provisions of 5 U.S.C. 553(a)(1).

Sincerely,

Richard B. Steinkamp,

Acting Chairman, Committee for the Implementation of Textile Agreements.

[FR Doc. 00–26919 Filed 10–18–00; 8:45 am]

BILLING CODE 3510–DR–F

COMMITTEE FOR THE IMPLEMENTATION OF TEXTILE AGREEMENTS

Adjustment of an Import Limit for Certain Cotton Textile Products Produced or Manufactured in Qatar

October 13, 2000.

AGENCY: Committee for the Implementation of Textile Agreements (CITA).

ACTION: Issuing a directive to the Commissioner of Customs adjusting a limit.

EFFECTIVE DATE: October 20, 2000.

FOR FURTHER INFORMATION CONTACT: Roy Unger, International Trade Specialist, Office of Textiles and Apparel, U.S. Department of Commerce, (202) 482–4212. For information on the quota status of this limit, refer to the Quota Status Reports posted on the bulletin boards of each Customs port, call (202) 927–5850, or refer to the U.S. Customs website at http://www.customs.gov. For information on embargoes and quota re-openings, call (202) 482–3715.

SUPPLEMENTARY INFORMATION:

Authority: Section 204 of the Agricultural Act of 1956, as amended (7 U.S.C. 1854); Executive Order 11651 of March 3, 1972, as amended.

The current limit for Categories 347/348 is being increased for carryforward.

A description of the textile and apparel categories in terms of HTS numbers is available in the CORRELATION: Textile and Apparel Categories with the Harmonized Tariff Schedule of the United States (see **Federal Register** notice 64 FR 71982, published on December 22, 1999). Also see 64 FR 70223, published on December 16, 1999.

Richard B. Steinkamp,

Acting Chairman, Committee for the Implementation of Textile Agreements.

Committee for the Implementation of Textile Agreements

October 13, 2000.

Commissioner of Customs,

Department of the Treasury, Washington, DC 20229.

Dear Commissioner: This directive amends, but does not cancel, the directive issued to you on December 10, 1999, by the Chairman, Committee for the Implementation of Textile Agreements. That directive concerns imports of certain cotton and man-made fiber textile products, produced or manufactured in Qatar and exported during the twelve-month period beginning on January 1, 2000 and extending through December 31, 2000.

Effective on October 20, 2000, you are directed to increase the current limit for Categories 347/348 to 672,888 dozen [1], as provided for under the Uruguay Round Agreement on Textiles and Clothing:

The Committee for the Implementation of Textile Agreements has determined that this action falls within the foreign affairs exception of the rulemaking provisions of 5 U.S.C. 553(a)(1).

Sincerely,

Richard B. Steinkamp,

[1] The limit has not been adjusted to account for any imports exported after December 31, 1999.

Acting Chairman, Committee for the Implementation of Textile Agreements.

[FR Doc. 00–26920 Filed 10–18–00; 8:45 am]

BILLING CODE 3510–DR–F

COMMITTEE FOR THE IMPLEMENTATION OF TEXTILE AGREEMENTS

Adjustment of an Import Limit for Certain Wool Textile Products Produced or Manufactured in Russia

October 13, 2000.

AGENCY: Committee for the Implementation of Textile Agreements (CITA).

ACTION: Issuing a directive to the Commissioner of Customs increasing a limit.

EFFECTIVE DATE: October 20, 2000.

FOR FURTHER INFORMATION CONTACT: Naomi Freeman, International Trade Specialist, Office of Textiles and Apparel, U.S. Department of Commerce, (202) 482–4212. For information on the quota status of this limit, refer to the Quota Status Reports posted on the bulletin boards of each Customs port, call (202) 927–5850, or refer to the U.S. Customs website at http://www.ustreas.gov. For information on embargoes and quota re-openings, call (202) 482–3715.

SUPPLEMENTARY INFORMATION:

Authority: Section 204 of the Agricultural Act of 1956, as amended (7 U.S.C. 1854); Executive Order 11651 of March 3, 1972, as amended.

The current limit for Category 435 is being increased for carryover.

A description of the textile and apparel categories in terms of HTS numbers is available in the CORRELATION: Textile and Apparel Categories with the Harmonized Tariff Schedule of the United States (see **Federal Register** notice 64 FR 71982, published on December 22, 1999). Also see 64 FR 50498, published on September 17, 1999.

Richard B. Steinkamp,

Acting Chairman, Committee for the Implementation of Textile Agreements.

Committee for the Implementation of Textile Agreements

October 13, 2000.

Commissioner of Customs,

Department of the Treasury, Washington, DC 20229.

Dear Commissioner: This directive amends, but does not cancel, the directive issued to you on September 13, 1999, by the Chairman, Committee for the Implementation of Textile Agreements. That directive concerns imports of certain wool textile products, produced or manufactured in Russia and exported during the twelve-month period which began on January 1, 2000 and extends through December 31, 2000.

Effective on October 20, 2000, you are directed to increase the current limit for Category 435 to 60,075 dozen [1], as provided for under the terms of the current bilateral agreement between the Governments of the United States and the Russian Federation.

The Committee for the Implementation of Textile Agreements has determined that this action falls within the foreign affairs exception of the rulemaking provisions of 5 U.S.C. 553(a)(1).

Sincerely,

Richard B. Steinkamp,

Acting Chairman, Committee for the Implementation of Textile Agreements.

[FR Doc. 00–26921 Filed 10–18–00; 8:45 am]

BILLING CODE 3510–DR–F

[1] The limit has not been adjusted to account for any imports exported after December 31, 1999.

DEPARTMENT OF EDUCATION

Notice of Proposed Information Collection Requests

AGENCY: Department of Education.

ACTION: Notice of proposed information collection requests.

SUMMARY: The Leader, Regulatory Information Management, Office of the Chief Information Officer, invites comments on the proposed information collection requests as required by the Paperwork Reduction Act of 1995.

DATES: An emergency review has been requested in accordance with the Act (44 U.S.C. Chapter 3507 (j)), since public harm is reasonably likely to result if normal clearance procedures are followed. Approval by the Office of Management and Budget (OMB) has been requested by October 18, 2000. A regular clearance process is also beginning. Interested persons are invited to submit comments on or before December 18, 2000.

ADDRESSES: Written comments regarding the emergency review should be addressed to the Office of Information and Regulatory Affairs, Attention: Lauren Wittenberg, Desk Officer: Department of Education, Office of Management and Budget; 725 17th Street, NW, Room 10235, New Executive Office Building, Washington, DC 20503 or should be electronically mailed to the internet address Lauren_Wittenberg@omb.eop.gov.

SUPPLEMENTARY INFORMATION: Section 3506 of the Paperwork Reduction Act of 1995 (44 U.S.C. Chapter 35) requires that the Director of OMB provide interested Federal agencies and the public an early opportunity to comment on information collection requests. The Office of Management and Budget (OMB) may amend or waive the requirement for public consultation to the extent that public participation in the approval process would defeat the purpose of the information collection, violate State or Federal law, or substantially interfere with any agency's ability to perform its statutory obligations. The Leader, Information Management Group, Office of the Chief Information Officer, publishes this notice containing proposed information collection requests at the beginning of the Departmental review of the information collection.

Each proposed information collection, grouped by office, contains the following: (1) Type of review requested, *e.g.,* new, revision, extension, existing or reinstatement; (2) title; (3) summary of the collection; (4) description of the need for, and proposed use of, the information; (5) respondents and frequency of collection; and (6) reporting and/or recordkeeping burden. ED invites public comment.

The Department of Education is especially interested in public comment addressing the following issues: (1) Is this collection necessary to the proper functions of the Department; (2) will this information be processed and used in a timely manner; (3) is the estimate of burden accurate; (4) how might the Department enhance the quality, utility, and clarity of the information to be collected; and (5) how might the Department minimize the burden of this collection on respondents, including through the use of information technology.

Dated: October 13, 2000.

John Tressler,

Leader Regulatory Information Management, Office of the Chief Information Officer.

Office of Special Education and Rehabilitative Services

Type of Review: Reinstatement.

Title: Grantee Reporting Form.

Abstract: Rehabiliation Services Administration (RSA) training grants provide stipends to ''RSA Scholars'' in order to train skilled rehabilitation personnel. Grantees are required to ''track'' Scholars relative to the ''payback'' provision in the Rehabilitation Act. Data collection is reported annually to RSA in order to monitor performance and report progress to Congress.

Additional Information: The Grantee Reporting Form is a comprehensive and concise summary of the status of ''current'' and ''exited'' RSA scholars

who are the recipients of training funds under the Act.

Frequency: Annually.

Affected Public: Individuals or household; not-for-profit institutions; State, local, or Tribal Gov't, SEAs or LEAs.

Reporting and Recordkeeping Hour Burden: Responses: 165; Burden Hours: 165.

Requests for copies of the proposed information collection request should be addressed to Vivian Reese, Department of Education, 400 Maryland Avenue, SW, Room 4050, Regional Office Building 3, Washington, DC 20202–4651; or should be electronically mailed to the internet address OCIO_IMG_Issues@ed.gov, or should be faxed to 202–708–9346.

Comments regarding burden and/or the collection activity requirements, contact Sheila Carey at (202) 708–6287 or via her internet address Sheila_Carey@ed.gov. Individuals who use a telecommunications device for the deaf (TDD) may call the Federal Information Relay Service (FIRS) at 1–800–877–8339.

[FR Doc. 00–26853 Filed 10–18–00; 8:45 am]

BILLING CODE 4000–01–U

DEPARTMENT OF EDUCATION

Submission for OMB Review; Comment Request

AGENCY: Department of Education.

SUMMARY: The Leader, Regulatory Information Management Group, Office of the Chief Information Officer invites comments on the submission for OMB review as required by the Paperwork Reduction Act of 1995.

DATES: Interested persons are invited to submit comments on or before November 20, 2000.

ADDRESSES: Written comments should be addressed to the Office of Information and Regulatory Affairs, Attention: Lauren Wittenberg, Acting Desk Officer, Department of Education, Office of Management and Budget, 725 17th Street, NW, Room 10235, New Executive Office Building, Washington, DC 20503 or should be electronically mailed to the internet address Lauren_Wittenberg@omb.eop.gov.

SUPPLEMENTARY INFORMATION: Section 3506 of the Paperwork Reduction Act of 1995 (44 U.S.C. Chapter 35) requires that the Office of Management and Budget (OMB) provide interested Federal agencies and the public an early opportunity to comment on information collection requests. OMB may amend or waive the requirement for public consultation to the extent that public participation in the approval process would defeat the purpose of the information collection, violate State or Federal law, or substantially interfere with any agency's ability to perform its statutory obligations. The Leader, Regulatory Information Management Group, Office of the Chief Information Officer, publishes that notice containing proposed information collection requests prior to submission of these requests to OMB.

Each proposed information collection, grouped by office, contains the following: (1) Type of review requested, *e.g.* new, revision, extension, existing or reinstatement; (2) title; (3) summary of the collection; (4) description of the need for, and proposed use of, the information; (5) respondents and frequency of collection; and (6) reporting and/or recordkeeping burden. OMB invites public comment.

Dated: October 13, 2000.

John Tressler,

Leader, Regulatory Information Management, Office of the Chief Information Officer.

Office of Student Financial Assistance Programs

Type of Review: Extension.

Title: Student Right-to-Know Act (SRK).

Frequency: Annually.

Affected Public: Businesses or other for-profit; Not-for-profit institutions; Individuals or household.

Reporting and Recordkeeping Hour Burden: Responses: 8,500, Burden Hours: 228,150.

Abstract: The SRK requires institutions that participate in any program under Title IV of the HEA to make available to students and prospective student-athletes and their parents, high school coaches and high school counselors the aforementioned graduation rates as well as enrollment data and the graduation rates of student athletes, by race, gender, and sport.

Requests for copies of the proposed information collection request may be accessed from *http://edicsweb.ed.gov,* or should be addressed to Vivian Reese, Department of Education, 400 Maryland Avenue, SW, Room 4050, Regional Office Building 3, Washington, D.C. 20202–4651. Requests may also be electronically mailed to the internet address OCIO_IMG_Issues@ed.gov or faxed to 202–708–9346. Please specify the complete title of the information collection when making your request.

Comments regarding burden and/or the collection activity requirements should be directed to Joseph Schubart at (202) 708–9266 or via his internet address Joe_Schubart@ed.gov. Individuals who use a telecommunications device for the deaf (TDD) may call the Federal Information Relay Service (FIRS) at 1–800–877–8339.

[FR Doc. 00–26852 Filed 10–18–00; 8:45 am]

BILLING CODE 4000–01–U

DEPARTMENT OF ENERGY

Environmental Management Site-Specific Advisory Board, Savannah River; Notice of Open Meeting

AGENCY: Department of Energy.

ACTION: Notice of open meeting.

SUMMARY: This notice announces a meeting of the Environmental Management Site-Specific Advisory Board (EM SSAB), Savannah River. The Federal Advisory Committee Act (Pub. L. No. 92–463, 86 Stat. 770) requires that public notice of these meetings be announced in the **Federal Register**.

DATES: Monday, November 13, 2000 6:30 p.m.–9:00 p.m. Tuesday, November 14, 2000 8:30 a.m.–4:00 p.m.

ADDRESSES: North Augusta Community Center, 101 Brookside Avenue, North Augusta, SC.

FOR FURTHER INFORMATION CONTACT: Tom Treger, Office of Environmental Quality, Department of Energy Savannah River Operations Office, P.O. Box A, Aiken, SC, 29802; Phone: (803) 725–1958.

SUPPLEMENTARY INFORMATION:

Purpose of the Board: The purpose of the Board is to make recommendations to DOE and its regulators in the areas of environmental restoration, waste management, and related activities.

Tentative Agenda:

Monday, November 13, 2000

6:30 p.m.–7:00 p.m. Public comment session
7:00 p.m.–9:00 p.m. Committee meetings

Tuesday, November 14, 2000

8:30 a.m.–9:45 a.m. Approval of minutes; Agency updates; Public comment session; Facilitator update; Committee report; Bylaws Amendment process; Presentation of 2001 membership candidates
9:45 a.m.–10:30 a.m. Nuclear Materials Committee Report
10:30 a.m–12:00 p.m. SRS Planning Process Review and public comments
1:00 p.m.–1:30 p.m. Strategic and long term issues
1:30 p.m.–3:00 p.m. Waste Management Committee Report
3:00 p.m.–4:00 p.m. Environmental Remediation Committee; Packaging and Transportation Symposium trip report; Public comments

If needed, time will be allotted after public comments for items added to the agenda, and administrative details. A

final agenda will be available at the meeting, Monday, November 13.

Public Participation: The meeting is open to the public. Written statements may be filed with the Board either before or after the meeting. Individuals who wish to make the oral statements pertaining to agenda items should contact Tom Treger's office at the address or telephone listed above. Requests must be received five days prior to the meeting and reasonable provision will be made to include the presentation in the agenda. The Deputy Designated Federal Officer is empowered to conduct the meeting in a fashion that will facilitate the orderly conduct of business. Each individual wishing to make public comment will be provided equal time to present their comments.

Minutes: The minutes of this meeting will be available for public review and copying at the Freedom of Information Public Reading Room, 1E–190, Forrestal Building, 1000 Independence Avenue, SW., Washington, DC, 20585 between 9:00 a.m. and 4:00 p.m., Monday through Friday, except Federal holidays. Minutes will also be available by writing to Tom Treger, Department of Energy Savannah River Operations Office, PO Box A, Aiken, SC, 29802, or by calling him at (803) 725–1958.

Issued at Washington, DC on October 13, 2000.

Rachel M. Samuel,

Deputy Advisory Committee Management Officer.

[FR Doc. 00–26891 Filed 10–18–00; 8:45 am]

BILLING CODE 6450–01–P

DEPARTMENT OF ENERGY

Office of Defense Nuclear Nonproliferation (NN); Nonproliferation and National Security Advisory Committee

AGENCY: Department of Energy.

ACTION: Notice of closed meeting.

SUMMARY: This notice announces a meeting of the Nonproliferation and National Security Advisory Committee. The Federal Advisory Committee Act, 5 U.S.C. App. 2 10(a)(2) requires that public notice of these meetings be announced in the **Federal Register**.

DATES: Tuesday, October 24, 2000, 9 a.m. to 5 p.m. and Wednesday, October 25, 2000, 8 a.m. to 3 p.m.

ADDRESSES: Department of Energy, Forrestal Building, 1000 Independence Avenue, SW., Washington DC 20585

FOR FURTHER INFORMATION CONTACT: Mr. Robert Waldron (202–586–2400), Designated Federal Officer, Office of Nonproliferation Research and Engineering (NN–20), Office of Defense Nuclear Nonproliferation, 1000 Independence Avenue, SW., Washington, DC 20585.

SUPPLEMENTARY INFORMATION:

The purpose of the Committee: To provide the Secretary of Energy and the Deputy Administrator for Defense Nuclear Nonproliferation with advice, information, and recommendations on national research needs and priorities.

Purpose of the Meeting: To discuss the nonproliferation and national security research, development, and policy programs.

Closed Meeting: In the interest of national security, the meeting will be closed to the public, pursuant to the Federal Advisory Committee Act, 5 U.S.C. App. 2 10 (d), and the Federal Advisory Committee Management regulation, 41 CFR 101–6.1023, ''Procedures for Closing an Advisory Committee Meeting'', which incorporate by reference the Government in the Sunshine Act, 5 U.S.C. 552b, which, at 552b (c)(1) and (c)(3) permits closure of meetings where restricted data or other classified matters are discussed.

Minutes: Minutes of the meeting will be recorded and classified accordingly.

Issued at Washington, DC on October 16, 2000.

Rachel M. Samuel,

Deputy Advisory Committee, Management Officer.

[FR Doc. 00–26892 Filed 10–18–00; 8:45 am]

BILLING CODE 6450–01–U

DEPARTMENT OF ENERGY

Federal Energy Regulatory Commission

[Docket No. RP00–332–000]

ANR Pipeline Company; Notice of Technical Conference

October 13, 2000.

On June 15, 2000, ANR Pipeline Company (ANR) filed in compliance with Order No. 637. A technical conference to discuss the various issues raised by ANR's filing was held on September 20, 2000, and October 4, 2000.

Take notice that an additional session of the technical conference will be held Wednesday, November 15, 2000, at 10 a.m. in a room to be designated at the offices of the Federal Energy Regulatory Commission, 888 First Street, NE., Washington, DC 20426.

All interested persons and Staff are permitted to attend.

Linwood A. Watson, Jr.,

Acting Secretary.

[FR Doc. 00–26836 Filed 10–18–00; 8:45 am]

BILLING CODE 6717–01–M

DEPARTMENT OF ENERGY

Federal Regulatory Commission

[Docket No. RP–99–301–008]

ANR Pipeline Company; Notice of Compliance Filing

October 13, 2000.

Take notice that, on October 10, 2000, ANR Pipeline Company (ANR) tendered for filing as part of its FERC Gas Tariff, Second Revised Volume No. 1, the following revised tariff sheets, to be effective August 28, 2000.

Substitute Original Sheet No. 14O

Substitute Original Sheet No. 14P

ANR states that this filing is made in compliance with the Commission's Order dated September 27, 2000 in the captioned proceeding.

ANR states that copies of the filing have been mailed to all affected customers and state regulatory commissions.

Any person desiring to protest said filing should file a protest with the Federal Energy Regulatory Commission, 888 First Street NE, Washington, DC 20426, in accordance with section 385.211 of the Commission's Rules and Regulations. All such protests must be filed in accordance with section 154.210 of the Commission's Regulations. Protests will be considered by the Commission in determining the appropriate action to be taken, but will not serve to make protestants parties to the proceedings. Copies of this filing are on file with the Commission and are available for public inspection in the Public Reference Room. This filing may be viewed on the web at http://www.ferc.fed.us/online/rims.htm (call 202–208–2222 for assistance).

Linwood A. Watson, Jr.,

Acting Secretary.

[FR Doc. 00–26837 Filed 10–18–00; 8:45 am]

BILLING CODE 6717–01–M

DEPARTMENT OF ENERGY

Federal Energy Regulatory Commission

[Docket No. RP00–344–000]

Dominion Transmission, Inc.; Notice of Technical Conference

October 13, 2000.

Take notice that a technical conference to further discuss the various issues raised by Dominion Transmission, Inc.'s (Dominion) Order

No. 637 compliance filing will be held on Friday, October 27, 2000, at 10 a.m., in a room to be designated at the offices of the Federal Energy Regulatory Commission, 888 First Street NE., Washington, DC 20426.

All interested persons and Staff are permitted to attend.

Linwood A. Watson, Jr.,

Acting Secretary.

[FR Doc. 00–26835 Filed 10–18–00; 8:45 am]

BILLING CODE 6717–01–M

DEPARTMENT OF ENERGY

Federal Energy Regulatory Commission

[Docket No. RP00–505–001]

Kern River Gas Transmission Company; Notice of Compliance Filing

October 13, 2000.

Take notice that on October 10, 2000, Kern River Gas Transmission Company (Kern River) submitted supplemental information in support of its partial capacity turnback proposal in this proceeding.

Kern River states that the purpose of this filing is to comply with the Commission's Order dated September 22, 2000, which directed Kern River to file such supplemental information.

Kern River states that it has served a copy of this compliance filing upon each person designated on the official service list compiled by the Secretary in this proceeding.

Any person desiring to protest said filing should file a protest with the Federal Energy Regulatory Commission, 888 First Street NE, Washington, DC 20426, in accordance with section 385.211 of the Commission's Rules and Regulations. All such protests must be filed on or before October 20, 2000. Protests will be considered by the Commission in determining the appropriate action to be taken, but will not serve to make protestants parties to the proceedings. Copies of this filing are on file with the Commission and are available for public inspection in the Public Reference Room. This filing may be viewed on the web at http://www.ferc.fed.us/online/rims.htm (call 202–208–2222 for assistance).

Linwood A. Watson, Jr.,

Acting Secretary.

[FR Doc. 00–26834 Filed 10–18–00; 8:45 am]

BILLING CODE 6717–01–M

DEPARTMENT OF ENERGY

Federal Energy Regulatory Commission

[Docket No. RP01–36–000]

Maritimes & Northeast Pipeline, L.L.C.; Notice of Proposed Changes in FERC Gas Tariff

October 13, 2000.

Take notice that on October 6, 2000, Maritimes & Northeast Pipeline, L.L.C. (Maritimes) tendered for filing as part of its FERC Gas Tariff, First Revised Volume No. 1, First Revised Sheet No. 11, to become effective on November 1, 2000.

Maritimes states that, pursuant to section 20 of the General Terms and Conditions of its FERC Gas Tariff, it is filing its Inaugural Fuel Retainage Quantity filing to revise the Fuel Retainage Percentages (FRPs) for the four calendar periods beginning November 1, 2000. Maritimes states that its projected FRPs reflect decreases of 0.50% in the winter period and 0.10% in the spring and fall shoulder periods, with no change in the summer period.

Maritimes also states that it is submitting the calculation of the fuel retainage quantity (FRQ) deferral allocation, pursuant to section 20 which provides that Maritimes will calculate surcharges or refunds designed to amortize the net monetary value of the balance in the FRQ Deferred Account at the end of the previous accumulation period. Maritimes states that for the period December 1, 1999 through July 31, 2000, the FRQ Deferred Account resulted in a net credit balance of approximately $750,000 that will be refunded to Maritimes' customers, based on the allocation of the account balance over the actual throughput during the accumulation period, exclusive of backhauls.

Maritimes states that copies of this filing were mailed to all affected customers of Maritimes and interested state commissions.

Any person desiring to be heard or to protest said filing should file a motion to intervene or a protest with the Federal Energy Regulatory Commission, 888 First Street NE., Washington, DC 20426, in accordance with Sections 385.214 or 385.211 of the Commission's Rules and Regulations. All such motions or protests must be filed in accordance with section 154.210 of the Commission's Regulations. Protests will be considered by the Commission in determining the appropriate action to be taken, but will not serve to make protestants parties to the proceedings. Any person wishing to become a party must file a motion to intervene. Copies of this filing are on file with the Commission and are available for public inspection in the Public Reference Room. This filing may be viewed on the web at http://www.ferc.fed.us/online/rims.htm (call 202–208–2222 for assistance).

Linwood A. Watson, Jr.,

Acting Secretary.

[FR Doc. 00–26832 Filed 10–18–00; 8:45 am]

BILLING CODE 6717–01–M

DEPARTMENT OF ENERGY

Federal Energy Regulatory Commission

[Docket No. RP00–506–002]

Northwest Pipeline Corporation; Notice of Compliance Filing

October 13, 2000.

Take notice that on October 6, 2000, Northwest Pipeline Corporation (Northwest) submitted supplemental information in support of its partial capacity turnback proposal in this proceeding.

Northwest states that the purpose of this filing is to comply with the Commission's Order, dated September 22, 2000, which directed Northwest to file such supplemental information.

Northwest states that it has served a copy of this compliance filing upon each person designated on the official service list compiled by the Secretary in this proceeding.

Any person desiring to protest said filing should file a protest with the Federal Energy Commission, 888 First Street, NE, Washington, DC 20426, in accordance with section 385.211 of the Commission's Rules and Regulations. All such protests must be filed on or before October 20, 2000. Protests will be considered by the Commission in determining the appropriate action to be taken, but will not serve to make protestants parties to the proceedings. Copies of this filing are on file with the Commission and are available for public inspection in the Public Reference Room. This filing may be viewed on the web at http://www.ferc.fed.us/online.rims.htm (call 202–208–2222 for assistance).

Linwood A. Watson, Jr.,

Acting Secretary.

[FR Doc. 00–26833 Filed 10–18–00; 8:45 am]

BILLING CODE 6717–01–M

DEPARTMENT OF ENERGY

Federal Energy Regulatory Commission

[Project No. 2413–040]

Georgia Power Company; Notice of Availability of Draft Environmental Assessment

October 13, 2000.

An environmental assessment (EA) is available for public review. The EA analyzes the environmental impacts of approving Georgia Power Company's (licensee for the Wallace Dam Project, FERC No. 2413) request to permit the Reynolds Plantation to increase the rate of water withdrawal 3 MGD, about 4.6 cubic feet per second (cfs), to 14.125 MGD, about 21.9 cfs. No additional construction is required at either site.

The Reynold plantation would increase the water withdrawal at the Rees Jones intake facility from 0.75 million gallons per day (MGD) from Lake Oconee to 10.75 MGD. The Reynolds Plantation also would increase the rate of water withdrawal at the National Course facility from 0.75 MGD to 1.875 MGD.

The EA was written by staff in the Office of Energy Projects, Federal Energy Regulatory Commission. In the EA, Commission staff conclude that approving the licensee's request to permit the Reynold plantation to increase it's water withdrawals from Lake Oconee would not constitute a major federal action significantly affecting the quality of the human environment. Copies of the EA can be viewed on the web at www.ferc.fed.us/online/rims.htm. Call (202) 208–2222 for assistance. Copies are also available for inspection and reproduction at the Commission's Public Reference Room, located at 888 First Street NE, Room 2A, Washington, DC 20426, or by calling (202) 208–1371.

Anyone may file comments on the EA. The public, federal and state resource agencies are encouraged to provide comments. All written comments must be filed within 30 days of the issuance date of this notice shown above. Send an original and eight copies of all comments marked with the docket number P–2413–040 to: The Secretary, Federal Energy Regulatory Commission, 888 First Street NE, Washington, DC 20426. If you have any questions regarding this notice, please contact Sean Murphy at telephone: (202) 219–2964.

Linwood A. Watson, Jr.,

Acting Secretary.

[FR Doc. 00–26838 Filed 10–18–00; 8:45 am]

BILLING CODE 6717–01–M

ENVIRONMENTAL PROTECTION AGENCY

[FRL–6887–5]

Agency Information Collection Activities: Submission for OMB Review; Comment Request, Standards of Performance for New Stationary Sources Ammonium Sulfate Manufacturing Plants

AGENCY: Environmental Protection Agency (EPA).

ACTION: Notice.

SUMMARY: In compliance with the Paperwork Reduction Act (44 U.S.C. 3507(a)(1)(D)), this notice announces that the Information Collection Request (ICR) has been forwarded to the Office of Management and Budget (OMB) for review and approval: Standards of Performance for New Stationary Sources—Ammonium Sulfate Manufacturing Plants—NSPS Subpart PP (OMB #2060–0032), expiration date 11/30/00. The ICR describes the nature of the information collection and its expected burden and cost; where appropriate, it includes the actual data collection instrument.

DATES: Comments must be submitted on or before November 20, 2000.

ADDRESSES: Send comments, referencing EPA ICR No. 1066.03 and OMB Control No. 2060–0032, to the following addresses: Sandy Farmer, U.S. Environmental Protection Agency, Collection Strategies Division (Mail Code 2822), 1200 Pennsylvania Avenue, NW., Washington, DC 20460; and to Office of Information and Regulatory Affairs, Office of Management and Budget (OMB), Attention: Desk Officer for EPA, 725 17th Street, NW., Washington, DC 20503.

FOR FURTHER INFORMATION CONTACT: For a copy of the ICR contact Sandy Farmer at EPA by phone at (202) 260–2740, by E-Mail at Farmer.Sandy@epamail.epa.gov or download off the Internet at *http://www.epa.gov/icr* and refer to EPA ICR No. 1066.03. For technical questions about the ICR contact Stephen Howie at 202–564–4146.

SUPPLEMENTARY INFORMATION:

Title: Standards of Performance for Ammonium Sulfate Manufacturing Plants (OMB Control No.2060–0032; EPA ICR No 1066.03), expiration date 11/30/00. This is a request for extension of a currently approved collection.

Abstract: The Administrator has judged that PM emissions from ammonium sulfate manufacturing plants cause or contribute to air pollution that may reasonably be anticipated to endanger public health or welfare. Owners/operators of ammonium sulfate manufacturing plants must make the following one-time-only reports: notification of the date of construction or reconstruction; notification of the anticipated and actual dates of startup; notification of any physical or operational change to an existing facility which may increase the regulated pollutant emission rate; and the notification of the date of the initial performance test. The recordkeeping requirements for ammonium sulfate plants consist of the occurrence and duration of all start-ups and malfunctions, the initial performance tests results, amount of ammonium sulfate feed material, and the pressure drop across the emission control system. Records of startups, shutdowns and malfunctions shall be noted as they occur. Records of the performance test should include information necessary to determine the conditions of the performance test, and performance test measurements (including pressure drop across the emission control system) and results. The Continuous Monitoring System (CMS) shall record pressure drop across the scrubbers continuously and automatically.

In order to ensure compliance with the standards promulgated to protect public health, adequate reporting and recordkeeping is necessary. In the absence of such information enforcement personnel would be unable to determine whether the standards are being met on a continuous basis, as required by the Clean Air Act.

An agency may not conduct or sponsor, and a person is not required to respond to, a collection of information unless it displays a currently valid OMB control number. The OMB control numbers for EPA's regulations are listed in 40 CFR part 9 and 48 CFR Chapter 15. The **Federal Register** document required under 5 CFR 1320.8(d), soliciting comments on this collection of information was published on April 18, 2000; no comments were received.

Burden Statement: The annual public reporting and recordkeeping burden for this collection of information is estimated to average 91 hours per response. Burden means the total time, effort, or financial resources expended by persons to generate, maintain, retain,

or disclose or provide information to or for a Federal agency. This includes the time needed to review instructions; develop, acquire, install, and utilize technology and systems for the purposes of collecting, validating, and verifying information, processing and maintaining information, and disclosing and providing information; adjust the existing ways to comply with any previously applicable instructions and requirements; train personnel to be able to respond to a collection of information; search data sources; complete and review the collection of information; and transmit or otherwise disclose the information.

Respondents/Affected Entities: Ammonium sulfate manufacturing facilities.

Estimated Number of Respondents: 2.

Frequency of Response: 1.

Estimated Number of Responses: 2.

Estimated Total Annual Hour Burden: 182 hours.

Estimated Total Annualized Capital, O&M Cost Burden: 0.

Send comments on the Agency's need for this information, the accuracy of the provided burden estimates, and any suggested methods for minimizing respondent burden, including through the use of automated collection techniques to the following addresses. Please refer to EPA ICR No. 1066.03 and OMB Control No. 2060–0032 in any correspondence.

Dated: October 10, 2000.

Oscar Morales,

Director, Collection Strategies Division.

[FR Doc. 00–26911 Filed 10–18–00; 8:45 am]

BILLING CODE 6560–50–U

ENVIRONMENTAL PROTECTION AGENCY

[FRL–6887–3]

Gulf of Mexico Program Policy Review Board; Notice of Charter Renewal

AGENCY: Environmental Protection Agency (EPA).

ACTION: Notice of charter renewal.

SUMMARY: The Charter for the Environmental Protection Agency's Gulf of Mexico Program Policy Review Board (GMPPRB) will be renewed for an additional two-year period, as a necessary committee which is in the public interest, in accordance with the provisions of the Federal Advisory Committee Act (FACA), 5 U.S.C. App section 9(c). The purpose of GMPPRB is to provide advice and recommendations to the Administrator of EPA on issues associated with environmental management and policy of the Gulf of Mexico.

It is determined that GMPPRB is in the public interest in connection with the performance of duties imposed on the Agency by law.

Inquiries may be directed to Gloria Car, U.S. EPA, Building 1103, Room 202, Stennis Space Center, MS 39529.

Dated: October 10, 2000.

Gloria D. Car,

Designated Federal Officer.

[FR Doc. 00–26912 Filed 10–18–00; 8:45 am]

BILLING CODE 6560–50–U

ENVIRONMENTAL PROTECTION AGENCY

[FRL–6887–4]

Clean Water Act Class II: Proposed Consent Agreement and Opportunity to Comment Regarding the City of San Buenaventura Proceeding Under Clean Water Act Section 309(g)(1), (2)(B) and 40 CFR 22.13(b)

AGENCY: Environmental Protection Agency (EPA).

ACTION: Notice.

SUMMARY: EPA is providing notice of a proposed Consent Agreement for alleged violations of the Clean Water Act (Act). EPA is also providing notice of opportunity to comment on the proposed Consent Agreement.

EPA is authorized under section 309(g) of the Act, 33 U.S.C. 1319(g), to assess a civil penalty after providing the person subject to the penalty notice of the proposed penalty and the opportunity for a hearing, and after providing interested persons notice of the proposed penalty and a reasonable opportunity to comment on its issuance. Under section 309(g), any person who violates section 405 of the Clean Water Act, 33 U.S.C. 1345, may be assessed a penalty in a ''Class II'' administrative penalty proceeding.

Class II proceedings under section 309(g) are conducted in accordance with the ''Consolidated Rules of Practice Governing the Administrative Assessment of Civil Penalties, Issuance of Compliance or Corrective Action Orders, and the Revocation, Termination or Suspension of Permits,'' 40 CFR part 22 (''Consolidated Rules''), published at 64 FR 40138, 40177 (July 23, 1999). The procedures through which the public may submit written comment on a proposed Class II order or participate in a Class II proceeding, and the procedures by which a respondent may request a hearing, are set forth in the Consolidated Rules. The deadline for submitting public comment on a proposed Class II order is forty (40) days after publication of this notice.

On September 29, 2000, EPA filed with Danielle Carr, Regional Hearing Clerk, U.S. EPA, Region IX, 75 Hawthorne Street, San Francisco, California 94105, (415) 744–1391, the following Consent Agreement:

In the Matter of the City of San Buenaventura, Docket No. CWA–09–99–0014.

For the alleged violations set forth in the Consent Agreement, Respondents agree to pay to the United States a civil penalty of $17,507 (seventeen thousand five hundred and seven dollars) and perform a Supplementary Environmental Project of $86,493 (eighty six thousand, four hundred and ninety three dollars), a total of $104,000 (one hundred and four thousand dollars) for violations of section 405(a) of the Act, 33 U.S.C. 1345(a), for the application of sewage sludge at greater than agronomic rates.

Procedures by which the public may comment on a proposed Class II penalty or participate in a Class II penalty proceeding are set forth in the Consolidated Rules. The deadline for submitting public comment on a proposed Class II penalty is thirty days after issuance of public notice.

FOR FURTHER INFORMATION CONTACT: Persons wishing to receive a copy of EPA's Consolidated Rules, review the Complaint or other documents filed in this proceeding, comment upon the proposed assessment, or otherwise participate in the proceeding should contact Danielle Carr, Regional Hearing Clerk, U.S. EPA, Region IX, 75 Hawthorne Street, San Francisco, California 94105, (415) 744–1391. The administrative record for this proceeding is located in the EPA Regional Office identified above, and the file will be open for public inspection during normal business hours. All information submitted by the City of San Buenaventura is available as part of the administrative record, subject to provisions of law restricting public disclosure of confidential information. In order to provide opportunity for public comment, EPA will issue no final order assessing a penalty in these proceedings prior to forty (40) days after the date of publication of this notice.

Dated: October 11, 2000.

Alexis Strauss,

Director, Water Division.

[FR Doc. 00–26910 Filed 10–18–00; 8:45 am]

BILLING CODE 6560–50–U

FEDERAL RESERVE SYSTEM

Formations of, Acquisitions by, and Mergers of Bank Holding Companies

The companies listed in this notice have applied to the Board for approval, pursuant to the Bank Holding Company Act of 1956 (12 U.S.C. 1841 *et seq.*) (BHC Act), Regulation Y (12 CFR Part 225), and all other applicable statutes and regulations to become a bank holding company and/or to acquire the assets or the ownership of, control of, or the power to vote shares of a bank or bank holding company and all of the banks and nonbanking companies owned by the bank holding company, including the companies listed below.

The applications listed below, as well as other related filings required by the Board, are available for immediate inspection at the Federal Reserve Bank indicated. The application also will be available for inspection at the offices of the Board of Governors. Interested persons may express their views in writing on the standards enumerated in the BHC Act (12 U.S.C. 1842(c)). If the proposal also involves the acquisition of a nonbanking company, the review also includes whether the acquisition of the nonbanking company complies with the standards in section 4 of the BHC Act (12 U.S.C. 1843). Unless otherwise noted, nonbanking activities will be conducted throughout the United States. Additional information on all bank holding companies may be obtained from the National Information Center website at www.ffiec.gov/nic/.

Unless otherwise noted, comments regarding each of these applications must be received at the Reserve Bank indicated or the offices of the Board of Governors not later than November 14, 2000.

A. Federal Reserve Bank of New York (Betsy Buttrill White, Senior Vice President) 33 Liberty Street, New York, New York 10045–0001:

1. The Chase Manhattan Corporation, New York, New York (Chase); to acquire 100 percent of the voting shares of, and thereby merge with, J.P. Morgan & Co. Inc., New York, New York (J.P. Morgan), and thereby indirectly acquire voting shares of Morgan Guaranty Trust Company of New York, New York, New York (Morgan Guaranty).

In connection with this transaction, Applicant and J.P. Morgan also have granted cross-options to purchase up to 19.9 percent of the outstanding shares of each other's common stock. These options would expire on consummation of the merger. Subsidiaries banks of Chase include Chase Bank of Texas-San Angelo, National Association, San Angelo, Texas; The Chase Manhattan Bank, New York, New York; Chase Manhattan Bank and Trust Company, National Association, Los Angeles, California; Chase Manhattan Bank USA, Wilmington, Delaware; and Chase Manhattan Private Bank, National Association, Tampa, Florida.

In connection with this transaction, Applicant also has applied to acquire J.P. Morgan FSB, Palm Beach, Florida, and thereby engage in operating a savings association, pursuant to § 225.28(b)(4)(ii) of Regulation Y.

In connection with this transaction, Applicant also has applied to merge its subsidiary bank, the Chase Manhattan Bank, New York, New York, with Morgan Guaranty and to establish additional branches as a result of such merger.

B. Federal Reserve Bank of Atlanta (Cynthia C. Goodwin, Vice President) 104 Marietta Street, N.W., Atlanta, Georgia 30303–2713:

1. Alabama National BanCorporation, Birmingham, Alabama; to acquire 100 percent of the voting shares of Peoples State Bank of Groveland, Groveland, Florida.

2. Whitney Holding Corporation, New Orleans, Louisiana; to merge with Prattville Financial Services Corporation, Prattville, Alabama, and thereby indirectly acquire voting shares of Bank of Pratville, Pratville, Alabama.

C. Federal Reserve Bank of Kansas City (D. Michael Manies, Assistant Vice President) 925 Grand Avenue, Kansas City, Missouri 64198–0001:

1. Nebraska Bancshares, Inc., Farnam, Nebraska; to acquire 12.62 percent of the voting shares of Stockmens Financial Corporation, Rapid City, South Dakota, and thereby indirectly acquire voting shares of Bankwest, Castle Rock, Colorado, and Security First Bank, Sidney, Nebraska.

D. Federal Reserve Bank of Dallas (W. Arthur Tribble, Vice President) 2200 North Pearl Street, Dallas, Texas 75201–2272:

1. Community Bancshares Company, Colfax, Louisiana; to become a bank holding company by acquiring 100 percent of the voting shares of Colfax Banking Company, Colfax, Louisiana.

2. Cooper Lake Financial Corporation, Cooper, Texas; to acquire 100 percent of the voting shares of The Delta Bank, Cooper, Texas.

Board of Governors of the Federal Reserve System, October 13, 2000.

Robert deV. Frierson,

Associate Secretary of the Board.

[FR Doc. 00–26851 Filed 10–18–00; 8:45 am]

BILLING CODE 6210–01–P

FEDERAL RESERVE SYSTEM

Formations of, Acquisitions by, and Mergers of Bank Holding Companies

The companies listed in this notice have applied to the Board for approval, pursuant to the Bank Holding Company Act of 1956 (12 U.S.C. 1841 *et seq.*) (BHC Act), Regulation Y (12 CFR Part 225), and all other applicable statutes and regulations to become a bank holding company and/or to acquire the assets or the ownership of, control of, or the power to vote shares of a bank or bank holding company and all of the banks and nonbanking companies owned by the bank holding company, including the companies listed below.

The applications listed below, as well as other related filings required by the Board, are available for immediate inspection at the Federal Reserve Bank indicated. The application also will be available for inspection at the offices of the Board of Governors. Interested persons may express their views in writing on the standards enumerated in the BHC Act (12 U.S.C. 1842(c)). If the proposal also involves the acquisition of a nonbanking company, the review also includes whether the acquisition of the nonbanking company complies with the standards in section 4 of the BHC Act (12 U.S.C. 1843). Unless otherwise noted, nonbanking activities will be conducted throughout the United States. Additional information on all bank holding companies may be obtained from the National Information Center website at www.ffiec.gov/nic/.

Unless otherwise noted, comments regarding each of these applications must be received at the Reserve Bank indicated or the offices of the Board of Governors not later than November 13, 2000.

A. Federal Reserve Bank of Chicago (Phillip Jackson, Applications Officer) 230 South LaSalle Street, Chicago, Illinois 60690–1414:

1. Merchants and Manufacturers Bancorporation, Inc., New Berlin, Wisconsin, and Merchants Merger Corp., New Berlin, Wisconsin; to merge with CBOC, Inc., Oconto Falls, Wisconsin, and thereby indirectly acquire Community Bank of Oconto County, Oconto Falls, Wisconsin.

Board of Governors of the Federal Reserve System, October 16, 2000.

Robert deV. Frierson,

Associate Secretary of the Board.

[FR Doc. 00–26933 Filed 10–18–00; 8:45 am]

BILLING CODE 6210–01–P

FEDERAL RESERVE SYSTEM

Notice of Proposals To Engage in Permissible Nonbanking Activities or To Acquire Companies That Are Engaged in Permissible Nonbanking Activities

The companies listed in this notice have given notice under section 4 of the Bank Holding Company Act (12 U.S.C. 1843) (BHC Act) and Regulation Y, (12 CFR Part 225) to engage *de novo*, or to acquire or control voting securities or assets of a company, including the companies listed below, that engages either directly or through a subsidiary or other company, in a nonbanking activity that is listed in § 225.28 of Regulation Y (12 CFR 225.28) or that the Board has determined by Order to be closely related to banking and permissible for bank holding companies. Unless otherwise noted, these activities will be conducted throughout the United States.

Each notice is available for inspection at the Federal Reserve Bank indicated. The notice also will be available for inspection at the offices of the Board of Governors. Interested persons may express their views in writing on the question whether the proposal complies with the standards of section 4 of the BHC Act. Additional information on all bank holding companies may be obtained from the National Information Center website at www.ffiec.gov/nic/.

Unless otherwise noted, comments regarding the applications must be received at the Reserve Bank indicated or the offices of the Board of Governors not later than November 2, 2000.

A. Federal Reserve Bank of Richmond (A. Linwood Gill III, Vice President) 701 East Byrd Street, Richmond, Virginia 23261–4528:

1. BB&T Corporation, Winston-Salem, North Carolina; to acquire FirstSpartan Financial Corp., Spartanburg, South Carolina, and thereby indirectly acquire First Federal Bank, Spartanburg, South Carolina, and thereby engage in traditional thrift activities, pursuant to § 225.28(b)(4)(ii) of Regulation Y; FirstService Corporation, Spartanburg, South Carolina, and thereby engage in discount brokerage activities, pursuant to § 225.28(b)(7)(i) of Regulation Y; and First Trust Group, Inc., Greenville, South Carolina, and thereby engage in lending activities, pursuant to § 225.28(b)(1) of Regulation Y.

Board of Governors of the Federal Reserve System, October 13, 2000.

Robert deV. Frierson,

Associate Secretary of the Board.

[FR Doc. 00–26850 Filed 10–18–00; 8:45 am]

BILLING CODE 6210–01–P

FEDERAL RESERVE SYSTEM

Federal Open Market Committee; Domestic Policy Directive of August 22, 2000

In accordance with § 71.5 of its rules regarding availability of information (12 CFR part 271), there is set forth below the domestic policy directive issued by the Federal Open Market Committee at its meeting held on August 22, 2000.[1]

The Federal Open Market Committee seeks monetary and financial conditions that will foster price stability and promote sustainable growth in output. To further its long-run objectives, the Committee in the immediate future seeks conditions in reserve markets consistent with maintaining the federal funds rate at an average of around 6½ percent.

By order of the Federal Open Market Committee, October 12, 2000.

Donald L. Kohn,

Secretary, Federal Open Market Committee.

[FR Doc. 00–26849 Filed 10–18–00; 8:45 am]

BILLING CODE 6210–01–P

[1] Copies of the Minutes of the Federal Open Market Committee meeting of August 22, 2000, which include the domestic policy directive issued at that meeting, are available upon request to the Board of Governors of the Federal Reserve System, Washington, D.C. 20551. The minutes are published in the Federal Reserve Bulletin and in the Board's annual report.

DEPARTMENT OF HEALTH AND HUMAN SERVICES

White House Commission on Complementary and Alternative Medicine Policy; Notice of Meeting

Notice is hereby given that the White House Commission on Complementary and Alternative Medicine Policy will convene the second Town Hall Meeting. Additional Town Hall meetings are anticipated at future dates and other locations. The purpose of the meeting is to convene the Commission for a public hearing to receive public testimony from individuals and organizations interested in the subject of federal policy regarding complementary and alternative medicine. Comments received at the meeting may be used by the Commission to prepare the report to the President as required by the Executive Order.

Comments should focus on the four areas that follow. Questions for consideration include, but are not limited to those presented below. For each question, please consider including in your response concerns, possible obstacles, existing programs, and suggested solutions to guide the Commission in their deliberations.

I. Coordinated Research and Development to Increase Knowledge of Complementary and Alternative Medicine Practices and Interventions

(A) What can be done to expand the current research environment so that practices and interventions that lie outside conventional science are adequately and appropriately addressed?

(B) What types of incentives are needed to stimulate the research of CAM practices and interventions by the public and private sectors?

(C) How can we more effectively integrate the CAM and conventional research communities to stimulate and coordinate research?

II. Guidance for Access to, Delivery of, and Reimbursement for Complementary and Alternative Medicine Practices and Interventions

(A) Do you have ready access to CAM practices and interventions?

(B) How can access to safe and effective CAM practices and interventions be improved?

(C) What types of CAM practices and interventions should be reimbursable through federal programs or other health care coverage systems?

III. Training, Education, Certification, Licensure, and Accountability of Health Care Practitioners in Complementary and Alternative Medicine

(A) How can uniform standards of education, training, licensure and certification be applied to all CAM practitioners?

(B) What training and education should be required of all health care providers to assure access to safe and effective CAM practices and interventions?

(C) What sources of funds exist for the education and training of CAM practitioners?

(D) Are performance standards or practice guidelines needed to ensure the public will have access to the full range of safe and effective CAM practices and interventions?

IV. Delivery of Reliable and Useful Information on Complementary and Alternative Medicine to Health Care Professionals and the Public

(A) How can useful, reliable, and updated information about CAM practices and interventions be made more accessible? How would you like to receive such information?

(B) As a consumer, what kinds of information about CAM practices and

interventions are most needed and important to you?

(C) As a health care provider, what kinds of information about CAM practices and interventions are most needed and important to you?

The Town Hall Meeting is open to the public and opportunities for oral comments and written statements by the public will be provided.

Name of Committee: The White House Commission on Complementary and Alternative Medicine Policy.

Date: October 30–31, 2000.

Place: Town Hall Seattle, Seneca Room, 1119 Eighth Avenue, Seattle, WA 98101.

Contact Persons: Stephen C. Groft, Pharm. D., Executive Director, or Michele Chang, CMT, MPH, Executive Secretary; 6701 Rockledge Drive, Room 1010, MSC–7707, Bethesda, MD 20817–7707; Phone: (301) 435–7592, Fax: (301) 480–1691, E–Mail: WHCCAMP@od.nih.gov.

The President established the White House Commission on Complementary and Alternative Medicine Policy on March 7, 2000 by Executive Order 13147. The mission of the White House Commission on Complementary and Alternative Medicine Policy is to provide a report, through the Secretary of the Department of Health and Human Services, on legislative and administrative recommendations for assuring that public policy maximizes the benefits of complementary and alternative medicine to Americans.

Because of the need to obtain the views of the public on these issues as soon as possible and because of the early deadline for the report required of the Commission, this notice is being provided at the earliest possible time.

Public Participation

The Town Hall meeting is open to the public with attendance limited by the availability of space on a first come, first serve basis. Members of the public who wish to present oral comment may register by calling 1–800–953–3298 or by accessing the website at *http://www.whccamp.hhs.gov* no later than October 25, 2000.

Oral comments will be limited to five minutes. Individuals who register to speak will be assigned in the order in which they registered. Due to time constraints, only one representative from each organization will be allotted time for oral testimony. The number of speakers and the time allotted may also be limited by the number of registrants. All requests to register should include the name, address, telephone number, and business or professional affiliation of the interested party, and should indicate the area of interest or question (as described above) to be addressed. Individuals interested in attending the meeting to observe the proceedings but not to provide oral testimony should also register.

Any person attending the meeting who has not registered to speak in advance of the meeting will be allowed to make a brief oral statement at the conclusion of the morning and afternoon sessions, if time permits, and at the chairperson's discretion.

Individuals unable to attend the meeting, or any interested parties, may send written comments by mail, fax, or electronically to the staff office of the Commission for inclusion in the public record. When mailing or faxing written comments, please provide, if possible, an electronic version or a diskette.

Persons needing special assistance, such as sign language interpretation or other special accommodations, should contact the Commission staff at the address or telephone number listed no later than October 25, 2000.

Dated: October 11, 2000.

LaVerne Y. Stringfield,

Director, Office of Federal Advisory Committee Policy.

[FR Doc. 00–26869 Filed 10–18–00; 8:45 am]

BILLING CODE 4140–01–M

DEPARTMENT OF HEALTH AND HUMAN SERVICES

Centers for Disease Control and Prevention

[60Day–01–01]

Proposed Data Collections Submitted for Public Comment and Recommendations

In compliance with the requirement of section 3506(c)(2)(A) of the Paperwork Reduction Act of 1995, the Centers for Disease Control and Prevention (CDC) is providing an opportunity for public comment on proposed data collection projects. To request more information on the proposed projects or to obtain a copy of the data collection plans and instruments, call the CDC Assistant Reports Clearance Officer at 404–639–7090.

Comments are invited on: (i) Whether the proposed collection of information is necessary for the proper performance of the functions of the CDC, including whether the information shall have a practical utility; (ii) the accuracy of the agency's estimate of the burden of the proposed collection of information; (iii) ways to enhance the quality, utility, and clarity of the information to be collected; and (iv) ways to minimize the burden of the collection of information on respondents, including the use of automated collection techniques or other forms of information technology.

Send comments to Anne O'Connor, CDC Assistant Reports Clearance Officer, 1600 Clifton Road, MS–D24, Atlanta, Georgia 30333. Written comments should be received within 60 days of this notice.

Proposed Project: Health Hazard Evaluations/Technical Assistance and Emerging Problems (OMB No. 0920–0260)—Extension

National Institute for Occupational Safety and Health (NIOSH), Centers for Disease Control and Prevention (CDC).

In accordance with its mandates under the Occupational Safety and Health Act of 1970 and the Federal Mine Safety and Health Act of 1977, the National Institute for Occupational Safety and Health (NIOSH) responds each year to approximately 400 requests for health hazard evaluations to identify potential chemical, biological, or physical hazards at the workplace.

Approximately half of these requests require that NIOSH conduct a short-term field study to adequately address the issues raised by the requester. Since 1970, more than 10,000 of these studies have been completed. The main purpose of these studies is to help employers and employees identify and eliminate occupational health hazards. Ninety-five percent of these investigations respond to specific requests for assistance from employers, employees, employee representatives, or other government agencies. The remaining investigations are short-term field investigations initiated by NIOSH because it received information that a chemical, biological or physical agent may be hazardous to workers. In these investigations, NIOSH determines whether the issue warrants more detailed studies. Approximately 50% of the field investigations involve interviews or the administration of a questionnaire to the workers. Each questionnaire is specific to that workplace and its suspected diseases and/or hazards; however, questionnaires are derived from standard medical evaluation techniques. NIOSH distributes interim and final reports of the investigations, excluding personal identifiers, to requesters, employers, employee representatives, the Department of Labor (OSHA and MSHA), and, as appropriate, other state and federal agencies. Following the completion of field investigations, NIOSH administers follow-back questionnaires to employer and

employee representatives at the workplace to assess program effectiveness and identify areas for improvement. Because of the large number of investigations conducted each year, the need to respond quickly to requests for assistance, and the diverse nature of these investigations, NIOSH requests clearance for data collection in these investigations. The total estimated annual cost to respondents is $40,950.

Respondents	Number of respondents	Number of response per respondent	Avg. burden total per response (in hours)	Total burden (in hours)
Employees (initial interviews)	4,200	1	.25	1,050
Employees (questionnaires interviews)	5.250	1	.50	2,625
Employees (follow-back questionnaires)	420	1	.50	210
Employees (follow-back questionnaires)	420	1	.50	210
Total				4,095

Dated: October 13, 2000.

Nancy Cheal,

Acting Associate Director for Policy Planning, and Evaluation, Centers for Disease Control and Prevention (CDC).

[FR Doc. 00–26876 Filed 10–18–00; 8:45 am]

BILLING CODE 4163–18–P

DEPARTMENT OF HEALTH AND HUMAN SERVICES

Administration for Children and Families

Proposed Information Collection Activity; Comment Request

Proposed Projects

Title: Tribal TANF (Temporary Assistance to Needy Families) Experience: Problems, Solutions, and Lesson Learned.

OMB Number: New collection.

Description: The proposed research has four objectives: (1) To develop national-level research-based information on tribal TANF that is responsive to the needs of the tribal governments in making decisions on initiating their own TANF programs, as well as the needs of policymakers at federal, state, and local levels; (2) to develop objective performance measures for tribal TANF programs; (3) to develop a decision-support system to help tribal officials assess the advantages, disadvantages, risks and opportunities associated with operating a TANF program; and (4) to develop a tribal TANF Handbook that incorporates the experiences, best practices, and lessons learned.

Support Services International, Incorporated (SSI), an Indian-owned consulting firm, shall develop the data collection instruments and conduct the study. Data will be collected through: (1) Telephone surveys with staff at all current tribal TANF programs (a total of 27), a sample of 10 non-TANF tribes, and relevant officials in 20 states; (2) in-depth interviews with program staff on site visits to 9 tribes (7 TANF tribes and 2 non-TANF tribes); and (3) focus groups of 6–9 TANF recipients at each of the 7 tribal TANF sites visited. Four respondents at each site will be included in the telephone survey, and four in each in-depth on-site interview. The non-TANF tribes includes in the research samples are from a group of tribes that have considered the option of developing and operating their own tribal-specific TANF programs, but have declined to do so.

Respondents: Individuals.

Annual Burden Estimates:

Data collection instrument	Estimated No. of respondents	Responses per respondents	Average burden hour per interview*	Total burden hrs
Telephone Interview Guide	228	1	0.50	114
Personal Interview Guide	36	1	1.0	36
Focus Group Notes	53	1	0.8	44

Estimated Total Annual Burden Hours: 194.

There are no Capital Costs, Operating Costs and/or Maintenance Costs to report for this information collection.

In compliance with Section 3506(c)(2)(A) of the Paperwork Reduction Act of 1995, the Administration for Children and Families (ACF) is soliciting public comment on the specific aspects of the information collection described above. Copies of the proposed collection of information can be obtained and comments may be forwarded to the Administration for Children and Families, Office of Information Services, 370 L'Enfant Promenade, S.W., Washington, DC 20447, Attn: ACF Reports Clearance Officer. All requests should be identified by the title of the information collection.

The Department specifically requests comments on: (a) Whether the information collection activity is necessary for the proper performance of the functions of the agency, including whether the information shall have practical utility; (b) the accuracy of the agency's estimate of the burden of the proposed collection of information; (c) the quality, utility, and clarity of the information to be collected; and (d) ways to minimize the burden of the collection of information on respondents, including through the use of automated collection techniques or other forms of information technology. Consideration will be given to comments and suggestions submitted within 60 days of this publication.

Dated: October 13, 2000.

Bob Sargis,

Reports Clearance Officer.

[FR Doc. 00–26794 Filed 10–18–00; 8:45 am]

BILLING CODE 4150–04–M

DEPARTMENT OF HEALTH AND HUMAN SERVICES

Food and Drug Administration

Dermatologic and Ophthalmic Drugs Advisory Committee; Notice of Meeting

AGENCY: Food and Drug Administration, HHS.

ACTION: Notice.

This notice announces a forthcoming meeting of a public advisory committee of the Food and Drug Administration (FDA). At least one portion of the meeting will be closed to the public.

Name of Committee: Dermatologic and Ophthalmic Drugs Advisory Committee.

General Function of the Committee: To provide advice and recommendations to the agency on FDA's regulatory issues.

Date and Time: The meeting will be held on November 16, 2000, 9 a.m. to 5:30 p.m.

Location: Holiday Inn, Grand Ballroom, Two Montgomery Village Ave., Gaithersburg, MD.

Contact: Jaime Henriquez, Center for Drug Evaluation and Research (HFD–21), Food and Drug Administration, 5600 Fishers Lane (for express delivery, 5630 Fishers Lane, rm. 1066), Rockville, MD 20857, 301–827–7001, or FDA Advisory Committee Information Line, 1–800–741–8138 (301–443–0572 in the Washington, DC area), code 12534. Please call the Information Line for up-to-date information on this meeting.

Agenda: On November 16, 2000, the committee will discuss new drug application (NDA) 50–777, Protopic® (tacrolimus) Ointment, Fujisawa Healthcare, Inc., for short- and long-term treatment of the signs and symptoms of atopic dermatitis in adult and pediatric patients 2 years of age or older.

Procedure: Interested persons may present data, information, or views, orally or in writing, on issues pending before the committee. Written submissions may be made to the contact person by November 6, 2000. Oral presentations from the public will be scheduled between approximately 1:30 p.m. and 2:30 p.m. Time allotted for each presentation may be limited. Those desiring to make formal oral presentations should notify the contact person before November 6, 2000, and submit a brief statement of the general nature of the evidence or arguments they wish to present, the names and addresses of proposed participants, and an indication of the approximate time requested to make their presentation.

Closed Committee Deliberations: On November 16, 2000, from 9 a.m. to 10 a.m., the meeting will be closed to permit discussion and review of trade secret and/or confidential information regarding NDA issues (5 U.S.C. 552b(c)(4)).

Notice of this meeting is given under the Federal Advisory Committee Act (5 U.S.C. app. 2).

Dated: October 11, 2000.

Linda A. Suydam,

Senior Associate Commissioner.

[FR Doc. 00–26787 Filed 10–18–00; 8:45 am]

BILLING CODE 4160–01–F

DEPARTMENT OF HEALTH AND HUMAN SERVICES

Food and Drug Administration

Radiological Devices Panel of the Medical Devices Advisory Committee; Notice of Meeting

AGENCY: Food and Drug Administration, HHS.

ACTION: Notice.

This notice announces a forthcoming meeting of a public advisory committee of the Food and Drug Administration (FDA). At least one portion of the meeting will be closed to the public.

Name of Committee: Radiological Devices Panel of the Medical Devices Advisory Committee.

General Function of the Committee: To provide advice and recommendations to the agency on FDA's regulatory issues.

Date and Time: The meeting will be held on November 6, 2000, 10 a.m. to 4:30 p.m.

Location: Corporate Bldg., conference room 020B, 9200 Corporate Blvd., Rockville, MD.

Contact Person: Robert J. Doyle, Center for Devices and Radiological Health (HFZ–470), Food and Drug Administration, 9200 Corporate Blvd., Rockville, MD 20850, 301–594–1212, or FDA Advisory Committee Information Line, 1–800–741–8138 (301–443–0572 in the Washington, DC area), code 12526. Please call the Information Line for up-to-date information on this meeting.

Agenda: The committee will discuss, make recommendations, and vote on a premarket approval application for an embolic radiation therapy device.

Procedure: On November 6, 2000, from 10 a.m. to 12:30 p.m., and from 1 p.m. to 4:30 p.m., the meeting is open to the public. Interested persons may present data, information, or views, orally or in writing, on issues pending before the committee. Written submissions may be made to the contact person by October 26, 2000. Oral presentations from the public will be scheduled between approximately 10:15 a.m. and 10:45 a.m., and for an additional 30 minutes near the end of the committee deliberations. Time allotted for each presentation may be limited. Those desiring to make formal oral presentations should notify the contact person before October 26, 2000, and submit a brief statement of the general nature of the evidence or arguments they wish to present, the names and addresses of proposed participants, and an indication of the approximate time requested to make their presentation.

Closed Committee Deliberations: On November 6, 2000, from 12:30 p.m. to 1 p.m., the meeting will be closed to the public to permit discussion and review of trade secret and/or confidential commercial information (5 U.S.C. 552b(c)(4)) regarding pending and future agency issues.

Notice of this meeting is given under the Federal Advisory Committee Act (5 U.S.C. app. 2).

Dated: October 13, 2000.

Linda A. Suydam,

Senior Associate Commissioner.

[FR Doc. 00–26899 Filed 10–18–00; 8:45 am]

BILLING CODE 4160–01–F

DEPARTMENT OF HEALTH AND HUMAN SERVICES

Food and Drug Administration

Joint Meeting of the Advisory Committee for Pharmaceutical Science and the Dermatologic and Ophthalmic Drugs Advisory Committee; Notice of Meeting

AGENCY: Food and Drug Administration, HHS.

ACTION: Notice.

This notice announces a forthcoming meeting of a public advisory committee of the Food and Drug Administration (FDA). The meeting will be open to the public.

Name of Committee: Advisory Committee for Pharmaceutical Science and the Dermatologic and Ophthalmic Drugs Advisory Committee.

General Function of the Committee: To provide advice and recommendations to the agency on FDA's regulatory issues.

Date and Time: The meeting will be held on November 17, 2000, from 8:30 a.m. to 12:30 p.m.

Location: Quality Suites, Potomac Ballroom, 3 Research Ct., Rockville, MD.

Contact Person: Nancy Chamberlin or Jaime Henriquez, Center for Drug Evaluation and Research (HFD–21), Food and Drug Administration, 5600 Fishers Lane (for express delivery, 5630 Fishers Lane, rm. 1093), Rockville, MD 20857, 301–827–7001, or e-mail: CHAMBERLINN@cder.fda.gov, or FDA Advisory Committee Information Line, 1–800–741–8138 (301–443–0572 in the Washington, DC area), code 12539 and 12534. Please call the Information Line for up-to-date information on this meeting.

Agenda: On November 17, 2000, the committees will discuss the current status of, and future plans for, the draft FDA guidance entitled ''A Guidance for Industry, Topical Dermatological Drug Product NDA's and ANDA's—In Vivo Bioavailability, Bioequivalence, In Vitro Release, and Associated Studies;'' see the FDA internet web address www.fda.gov/cder/guidance/2481dft.pdf under the heading of ''Biopharmaceutics Draft Guidances.'' A proposed research program for addressing scientific issues related to this guidance will also be discussed.

Procedure: Interested persons may present data, information, or views, orally or in writing, on issues pending before the committee. Written submissions may be made to the contact person by November 6, 2000. Oral presentations from the public will be scheduled between approximately 11:15 a.m. to 12:15 p.m. Time allotted for each presentation may be limited. Those desiring to make formal oral presentations should notify the contact person before November 6, 2000, and submit a brief statement of the general nature of the evidence or arguments they wish to present, the names and addresses of proposed participants, and an indication of the approximate time requested to make their presentation.

Notice of this meeting is given under the Federal Advisory Committee Act (5 U.S.C. app. 2).

Dated: October 11, 2000.

Linda A. Suydam,

Senior Associate Commissioner.

[FR Doc. 00–26898 Filed 10–18–00; 8:45 am]

BILLING CODE 4160–01–F

DEPARTMENT OF HEALTH AND HUMAN SERVICES

Food and Drug Administration

[Docket No. 00D–1532]

International Cooperation on Harmonisation of Technical Requirements for Registration of Veterinary Medicinal Products (VICH); Draft Guidances for Industry on ''Effectiveness of Anthelmintics: Specific Recommendations for Equine'' (VICH GL15), ''Effectiveness of Anthelmintics: Specific Recommendations for Porcine'' (VICH GL16), and ''Effectiveness of Anthelmintics: Specific Recommendations for Canine'' (VICH GL19); Availability; Request for Comments

AGENCY: Food and Drug Administration, HHS.

ACTION: Notice; request for comments.

SUMMARY: The Food and Drug Administration (FDA) is announcing the availability for comment of three draft guidances for industry (Nos. 109, 110, and 111, respectively) entitled: ''Effectiveness of Anthelmintics: Specific Recommendations for Equine'' (VICH GL15), ''Effectiveness of Anthelmintics: Specific Recommendations for Porcine'' (VICH GL16), and ''Effectiveness of Anthelmintics: Specific Recommendations for Canine'' (VICH GL19). These related draft guidance documents have been developed by the International Cooperation on Harmonisation of Technical Requirements for Registration of Veterinary Medicinal Products (VICH). They are intended to standardize and simplify methods used in the evaluation of new anthelmintics submitted for approval to the European Union, Japan, and the United States.

DATES: Submit written comments on the draft guidances by December 18, 2000, to ensure their adequate consideration in preparation of the final guidance document. General comments on agency guidance documents are welcome at any time.

ADDRESSES: Copies of the draft guidances entitled ''Effectiveness of Anthelmintics: Specific Recommendations for Equine'' (VICH GL15), ''Effectiveness of Anthelmintics: Specific Recommendations for Porcine'' (VICH GL16), and ''Effectiveness of Anthelmintics: Specific Recommendations for Canine'' (VICH GL19) may be obtained on the Internet from the CVM home page at http://www.fda.gov/cvm/fda/TOCs/guideline.html. Persons without Internet access may submit written requests for single copies of the draft guidances to the Communications Staff (HFV–12), Center for Veterinary Medicine, Food and Drug Administration, 7500 Standish Place, Rockville, MD 20855. Send one self-addressed adhesive label to assist that office in processing your requests.

Submit written comments to the Dockets Management Branch (HFA–305), Food and Drug Administration, 5630 Fishers Lane, rm. 1061, Rockville, MD 20852.

FOR FURTHER INFORMATION CONTACT:

Regarding the VICH: Sharon R. Thompson, Center for Veterinary Medicine (HFV–3), Food and Drug Administration, 7500 Standish Pl., Rockville, MD 20855, 301–594–1798, e-mail: sthompso@cvm.fda.gov, or Carole R. Andres, Center for Veterinary Medicine (HFV–1), Food and Drug Administration, 7500 Standish Pl., Rockville, MD 20855, 301–827–6524, e-mail: candres1@cvm.fda.gov.

Regarding the draft guidance documents: Thomas Letonja, Center for Veterinary Medicine (HFV–135), Food and Drug Administration, 7500 Standish Pl., Rockville, MD 20855, 301–827–7576, e-mail: tletonja@cvm.fda.gov.

SUPPLEMENTARY INFORMATION:

I. Background

In recent years, many important initiatives have been undertaken by regulatory authorities and industry associations to promote the international harmonization of regulatory requirements. FDA has participated in efforts to enhance harmonization and has expressed its commitment to seek scientifically based harmonized technical requirements for the development of pharmaceutical products. One of the goals of harmonization is to identify and then reduce the differences in technical requirements for drug development among regulatory agencies in different countries.

FDA has actively participated in the International Conference on Harmonisation (ICH) of Technical Requirements for Registration of Pharmaceuticals for Human Use for several years to develop harmonized technical requirements for the approval of human pharmaceutical and biological products among the European Union, Japan, and the United States. The VICH is a parallel initiative for veterinary medicinal products. The VICH is concerned with developing harmonized technical requirements for the approval of veterinary medicinal products in the

European Union, Japan, and the United States, and includes input from both regulatory and industry representatives.

The VICH Steering Committee is composed of member representatives from the: European Commission; European Medicines Evaluation Agency; European Federation of Animal Health; Committee on Veterinary Medicinal Products; U.S. FDA; U.S. Department of Agriculture; Animal Health Institute; Japanese Veterinary Pharmaceutical Association; Japanese Association of Veterinary Biologics; and Japanese Ministry of Agriculture, Forestry, and Fisheries.

Two observers are eligible to participate in the VICH Steering Committee: One representative from the Government of Australia/New Zealand and one representative from the industry in Australia/New Zealand. The VICH Secretariat, which coordinates the preparation of documentation, is provided by the Confederation Mondiale de L'Industrie de la Sante Animale (COMISA). A COMISA representative also participates in the VICH Steering Committee meetings.

The VICH Steering Committee held a meeting on November 16 through 19, 1999, and agreed that the three draft guidances entitled ''Effectiveness of Anthelmintics: Specific Recommendations for Equine'' (VICH GL15), ''Effectiveness of Anthelmintics: Specific Recommendations for Porcine'' (VICH GL16), and ''Effectiveness of Anthelmintics: Specific Recommendations for Canine'' (VICH GL19) should be made available for public comment.

The three draft guidances: VICH GL15, VICH GL16, and VICH GL19, should be read in conjunction with the ''Efficacy of Anthelmintics: General Recommendations (EAGR)'' announced in the **Federal Register** of July 16, 1999 (64 FR 38445). The draft guidances for equine, porcine, and canine are part of the EAGR, and the aim of these three draft guidances is to: (1) Be more specific for certain issues not discussed in the general guidance, (2) highlight differences with the EAGR on effectiveness data recommendations, and (3) give explanations for disparities with the EAGR. Comments about the draft guidances will be considered by the FDA and the VICH Anthelmintic Working Group. Ultimately, FDA intends to adopt the VICH Steering Committee's final guidances and publish them as future guidances.

These draft guidances, developed under the VICH process, have been revised to conform to FDA's good guidance practices (65 FR 56468, September 19, 2000). For example, the documents have been designated ''guidance'' rather than ''guideline.'' Because guidance documents are not binding, unless specifically supported by statute or regulation, mandatory words such as ''must,'' ''shall,'' and ''will'' in the original VICH documents have been substituted with ''should.'' Similarly, words such as ''requirement'' or ''acceptable'' have been replaced by ''recommendation'' or ''recommended'' as appropriate to the context.

These draft guidances represent current FDA thinking on effectiveness recommendations for certain veterinary anthelmintic medicinal products. These draft guidances do not create or confer any rights for or on any person and will not operate to bind FDA or the public. An alternate method may be used as long as it satisfies the requirements of applicable statutes and regulations.

II. Comments

These draft guidances are being distributed for comment purposes only, and they are not intended for implementation at this time. Interested persons may submit to the Dockets Management Branch (address above) written comments regarding the draft guidance documents by December 18, 2000. Two copies of any comments are to be submitted, except that individuals may submit one copy. Comments are to be identified with the docket number found in brackets in the heading of this document. A copy of the draft guidances and received comments may be seen in the Dockets Management Branch between 9 a.m. and 4 p.m., Monday through Friday.

Dated: October 6, 2000.

Margaret M. Dotzel,

Associate Commissioner for Policy.

[FR Doc. 00–26897 Filed 10–18–00; 8:45 am]

BILLING CODE 4160–01–F

DEPARTMENT OF HEALTH AND HUMAN SERVICES

Health Care Financing Administration

[Document Identifier: HCFA–250 through HCFA–254]

Notice of Emergency Clearance and Public Meeting: Public Information Collection Requirements Submitted to the Office of Management and Budget (OMB)

AGENCY: Health Care Financing Administration, DHHS.

In compliance with the requirement of section 3506(c)(2)(A) of the Paperwork Reduction Act of 1995, the Health Care Financing Administration (HCFA), Department of Health and Human Services, is publishing the following summary of proposed collections for public comment. Interested persons are invited to send comments regarding this burden estimate or any other aspect of this collection of information, including any of the following subjects: (1) The necessity and utility of the proposed information collection for the proper performance of the agency's functions; (2) the accuracy of the estimated burden; (3) ways to enhance the quality, utility, and clarity of the information to be collected; and (4) the use of automated collection techniques or other forms of information technology to minimize the information collection burden.

We are, however, requesting an emergency review of the information collections referenced below. In compliance with the requirement of section 3506(c)(2)(A) of the Paperwork Reduction Act of 1995, we have submitted to the Office of Management and Budget (OMB) the following requirements for emergency review. We are requesting an emergency review because the collection of this information is needed before the expiration of the normal time limits under OMB's regulations at 5 CFR, Part 1320. A disruption in this collection activity may cause public harm. This is due to the potential and unnecessary loss to the Medicare Trust Fund as the result of the non-identification of health insurance coverage that is primary to Medicare. Collection of this information allows HCFA to identify those Medicare beneficiaries who have other group health insurance that would pay before Medicare, resulting in savings to the Medicare Trust Fund. The annual savings from the Medicare Secondary Payer (MSP) program are more than $3 billion per year.

Emergency Clearance

HCFA is requesting OMB review and approval of this collection by November 24, 2000, with a 180-day approval period. Written comments and recommendations will be accepted from the public if received by the individuals designated below by November 23, 2000. During this 180-day period, we will publish a separate **Federal Register** notice announcing the initiation of an extensive 60-day agency review and public comment period on these requirements. We will submit the requirements for OMB review and an extension of this emergency approval.

Type of Information Request: Revision of a currently approved collection; *Title of Information Collection:* Medicare Secondary Payer Information Collection

and Supporting Regulations in 42 CFR 411.25, 489.2, and 489.20; *Form Number:* HCFA–250 through HCFA–254 (OMB approval #: 0938–0214); *Use:* Medicare Secondary Payer (MSP) refers to those situations where Medicare does not have primary responsibility for paying the medical expenses of a Medicare beneficiary. Medicare intermediaries and carriers must collect information to perform various tasks to detect MSP cases, develop and disseminate tools to enable them to better perform their tasks, and monitor their performance in achievement of their assigned MSP functions. These information collection requirements describe the MSP requirements and consist of the following:

1. Initial enrollment questionnaire
2. MSP claims investigation, which consists of first claim development, trauma code development, self-reporting MSP liability development, notice to responsible third party development (411.25 notice), secondary claims development, and ''08'' development (involving claims where information cannot be obtained from the beneficiary)
3. Provider MSP development, which requires the provider to request information from the beneficiary or representative during admission and other encounters; *Frequency:* On occasion; *Affected Public:* Individuals or households, Business or other for-profit, and Not-for-profit institutions; *Number of Respondents:* 14,204,000; *Total Annual Responses:* 116,394,528; *Total Annual Hours Requested:* 3,305,814.

To obtain copies of the supporting statement and any related forms for the proposed paperwork collections referenced above, access HCFA's Web Site address at http://www.hcfa.gov/regs/prdact95.htm, or E-mail your request, including your address, phone number, OMB number, and HCFA document identifier, to Paperwork@hcfa.gov, or call the Reports Clearance Office on (410) 786–1326.

Public Meeting

HCFA will be holding a public meeting to permit interested parties an opportunity to give their views on how the content and use of the MSP collection requirements may need to be revised. Representatives of the hospital industry, health care consumer advocacy groups, and provider groups who wish to participate in the public meeting are asked to notify the Agency in advance of their interest in attending. At this meeting, the Health Care Financing Administration will solicit comments on the topics listed in the first paragraph of this notice and as referenced in the supporting statement, which may be obtained as described above.

The public meeting will be held on Friday, November 3, 2000, from 1:00–4:00 p.m., in the Multipurpose Room (Capacity: 100 persons) of the Health Care Financing Administration, 7500 Security Boulevard, Baltimore, Maryland 21244. Interested parties should provide notification of their planned attendance to Tom Bouchat or Joan Fowler, either via telephone (410) 786–4621 or (410) 786–0922, fax (410) 786–9963, or e-mail: Tbouchat@hcfa.gov or Jfowler@hcfa.gov by no later than 3 p.m., Monday, October 30, 2000.

Interested persons are invited to send comments regarding the burden or any other aspect of these collections of information requirements. However, as noted above, comments on these information collection requirements must be mailed and/or faxed to the designees referenced below by November 23, 2000:

Health Care Financing Administration, Office of Information Services, Division of HCFA Enterprise Standards, Room N2–14–26, 7500 Security Boulevard, Baltimore, MD 21244–1850, Fax Number: (410) 786–0262, Attn: Julie Brown HCFA–250 through HCFA–254 and,

Office of Information and Regulatory Affairs, Office of Management and Budget, Room 10235, New Executive Office Building, Washington, DC 20503, Fax Number: (202) 395–6974 or (202) 395–5167, Attn: Wendy Taylor, HCFA Desk Officer.

Dated: October 17, 2000.

John P. Burke, III,

HCFA Reports Clearance Officer, HCFA, Office of Information Services, Information Technology Investment Management Group, Division of HCFA Enterprise Standards.

[FR Doc. 00–27028 Filed 10–17–00; 3:06 pm]

BILLING CODE 4120–03–P

DEPARTMENT OF HEALTH AND HUMAN SERVICES

Health Care Financing Administration

[HCFA–8007–N]

RIN 0938–AK27

Medicare Program; Inpatient Hospital Deductible and Hospital and Extended Care Services Coinsurance Amounts for 2001

AGENCY: Health Care Financing Administration (HCFA), HHS.

ACTION: Notice.

SUMMARY: This notice announces the inpatient hospital deductible and the hospital and extended care services coinsurance amounts for services furnished in calendar year 2001 under Medicare's hospital insurance program (Medicare Part A). The Medicare statute specifies the formulae used to determine these amounts.

The inpatient hospital deductible will be $792. The daily coinsurance amounts will be: (a) $198 for the 61st through 90th day of hospitalization in a benefit period; (b) $396 for lifetime reserve days; and (c) $99 for the 21st through 100th day of extended care services in a skilled nursing facility in a benefit period.

EFFECTIVE DATE: This notice is effective on January 1, 2001.

FOR FURTHER INFORMATION CONTACT: Clare McFarland, (410) 786–6390. For case-mix analysis only: Gregory J. Savord, (410) 786–1521.

SUPPLEMENTARY INFORMATION:

I. Background

Section 1813 of the Social Security Act (the Act) provides for an inpatient hospital deductible to be subtracted from the amount payable by Medicare for inpatient hospital services furnished to a beneficiary. It also provides for certain coinsurance amounts to be subtracted from the amounts payable by Medicare for inpatient hospital and extended care services. Section 1813(b)(2) of the Act requires us to determine and publish, between September 1 and September 15 of each year, the amount of the inpatient hospital deductible and the hospital and extended care services coinsurance amounts applicable for services furnished in the following calendar year.

II. Computing the Inpatient Hospital Deductible for 2001

Section 1813(b) of the Act prescribes the method for computing the amount of the inpatient hospital deductible. The inpatient hospital deductible is an amount equal to the inpatient hospital deductible for the preceding calendar year, changed by our best estimate of the payment-weighted average of the applicable percentage increases (as defined in section 1886(b)(3)(B) of the Act) used for updating the payment rates to hospitals for discharges in the fiscal year that begins on October 1 of the same preceding calendar year, and adjusted to reflect real case mix. The adjustment to reflect real case mix is determined on the basis of the most recent case mix data available. The amount determined under this formula is rounded to the nearest multiple of $4

(or, if midway between two multiples of $4, to the next higher multiple of $4).

Under section 1886(b)(3)(B)(i) of the Act, as amended by section 4401(a) of the Balanced Budget Act of 1997 (BBA '97) (Public Law 105–33), the percentage increase used to update the payment rates for fiscal year 2001 for hospitals paid under the prospective payment system is the market basket percentage increase minus 1.1 percentage points.

Under section 1886(b)(3)(B)(ii) of the Act, as amended by section 4411(a) of the BBA '97, the percentage increase used to update the payment rates for fiscal year 2001 for hospitals excluded from the prospective payment system depends on the hospital's allowable operating costs of inpatient hospital services. If the hospital's allowable operating costs of inpatient hospital services for the most recent cost reporting period for which information is available—

(1) Are equal to or exceed 110 percent of the hospital's target amount for that cost reporting period, the applicable percentage increase is the market basket percentage;

(2) Exceed 100 percent but are less than 110 percent of the hospital's target amount for that cost reporting period, the applicable percentage increase is the market basket percentage minus 0.25 percentage points for each percentage point by which the hospital's allowable operating costs are less than 110 percent of the target amount for that cost reporting period (but not less than 0 percent);

(3) Are equal to or less than 100 percent of the hospital's target amount for that cost reporting period, but exceed two-thirds of the target amount, the applicable percentage increase is 0 percent or, if greater, the market basket percentage minus 2.5 percentage points; or

(4) Do not exceed two-thirds of the hospital's target amount for that cost reporting period, the applicable percentage increase is 0 percent.

The market basket percentage increase for fiscal year 2001 is 3.4 percent, as announced in the final rule titled ''Medicare Program; Changes to the Hospital Inpatient Prospective Payment Systems and Fiscal Year 2001 Rates,'' published in the **Federal Register** on August 1, 2000 (65 FR 47054). Therefore, the percentage increase for hospitals paid under the prospective payment system is 2.3 percent. The average payment percentage increase for hospitals excluded from the prospective payment system is 1.4 percent. Weighting these percentages in accordance with payment volume, our best estimate of the payment-weighted average of the increases in the payment rates for fiscal year 2001 is 2.21 percent.

To develop the adjustment for real case mix, we first calculated for each hospital an average case mix that reflects the relative costliness of that hospital's mix of cases compared to those of other hospitals. We then computed the change in average case mix for hospitals paid under the Medicare prospective payment system in fiscal year 2000 compared to fiscal year 1999. (We excluded from this calculation hospitals excluded from the prospective payment system because their payments are based on reasonable costs and are affected only by real changes in case mix.) We used bills from prospective payment hospitals received in HCFA as of June 2000. These bills represent a total of about 7.3 million discharges for fiscal year 2000 and provide the most recent case mix data available at this time. Based on these bills, the change in average case mix in fiscal year 2000 is −0.95 percent. Based on past experience, we expect the overall case mix change to be −0.5 percent as the year progresses and more fiscal year 2000 data become available.

Section 1813 of the Act requires that the inpatient hospital deductible be adjusted only by that portion of the case mix change that is determined to be real. There is a negligible change in overall case mix for fiscal year 2000. We estimate that there is no change in real case mix; that is, we estimate that the change in real case mix for fiscal year 2000 is 0.0 percent.

Thus, the estimate of the payment-weighted average of the applicable percentage increases used for updating the payment rates is 2.21 percent, and the real case mix adjustment factor for the deductible is 0.0 percent. Therefore, under the statutory formula, the inpatient hospital deductible for services furnished in calendar year 2001 is $792. This deductible amount is determined by multiplying $776 (the inpatient hospital deductible for 2000) by the payment-weighted average increase in the payment rates of 1.0221 multiplied by the increase in real case mix of 1.000, which equals $793.15 and is rounded to $792.

III. Computing the Inpatient Hospital and Extended Care Services Coinsurance Amounts for 2001

The coinsurance amounts provided for in section 1813 of the Act are defined as fixed percentages of the inpatient hospital deductible for services furnished in the same calendar year. Thus, the increase in the deductible generates increases in the coinsurance amounts. For inpatient hospital and extended care services furnished in 2001, in accordance with the fixed percentages defined in the law, the daily coinsurance for the 61st through 90th day of hospitalization in a benefit period will be $198 (one-fourth of the inpatient hospital deductible); the daily coinsurance for lifetime reserve days will be $396 (one-half of the inpatient hospital deductible); and the daily coinsurance for the 21st through 100th day of extended care services in a skilled nursing facility in a benefit period will be $99 (one-eighth of the inpatient hospital deductible).

IV. Cost to Beneficiaries

We estimate that in 2001 there will be about 8.56 million deductibles paid at $792 each, about 2.10 million days subject to coinsurance at $198 per day (for hospital days 61 through 90), about 0.97 million lifetime reserve days subject to coinsurance at $396 per day, and about 30.08 million extended care days subject to coinsurance at $99 per day. Similarly, we estimate that in 2000 there will be about 8.42 million deductibles paid at $776 each, about 2.06 million days subject to coinsurance at $194 per day (for hospital days 61 through 90), about 0.95 million lifetime reserve days subject to coinsurance at $388 per day, and about 28.64 million extended care days subject to coinsurance at $97 per day. Therefore, the estimated total increase in cost to beneficiaries is about $480 million (rounded to the nearest $10 million), due to (1) the increase in the deductible and coinsurance amounts and (2) the change in the number of deductibles and daily coinsurance amounts paid.

V. Waiver of Proposed Notice and Comment Period

The Medicare statute, as discussed previously, requires publication of the Medicare Part A inpatient hospital deductible and the hospital and extended care services coinsurance amounts for services for each calendar year. The amounts are determined according to the statute. As has been our custom, we use general notices, rather than notice and comment rulemaking procedures, to make the announcements. In doing so, we acknowledge that, under the Administrative Procedure Act, interpretive rules, general statements of policy, and rules of agency organization, procedure, or practice are excepted from the requirements of notice and comment rulemaking.

We considered publishing a proposed notice to provide a period for public comment. However, we may waive that

procedure if we find good cause that prior notice and comment are impracticable, unnecessary, or contrary to the public interest. We find that the procedure for notice and comment is unnecessary because the formulae used to calculate the inpatient hospital deductible and hospital and extended care services coinsurance amounts are statutorily directed, and we can exercise no discretion in following these formulae. Moreover, the statute establishes the time period for which the deductible and coinsurance amounts will apply and delaying publication would be contrary to the public interest. Therefore, we find good cause to waive publication of a proposed notice and solicitation of public comments.

VI. Regulatory Impact Statement

We have examined the impacts of this notice as required by Executive Order 12866 and the Regulatory Flexibility Act (RFA) (Public Law 96–354). Executive Order 12866 directs agencies to assess all costs and benefits of available regulatory alternatives and, when regulation is necessary, to select regulatory approaches that maximize net benefits (including potential economic, environmental, public health and safety effects; distributive impacts; and equity). The RFA requires agencies to analyze options for regulatory relief for small businesses. For purposes of the RFA, States and individuals are not considered small entities.

Also, section 1102(b) of the Act requires the Secretary to prepare a regulatory impact analysis for any notice that may have a significant impact on the operations of a substantial number of small rural hospitals. Such an analysis must conform to the provisions of section 604 of the RFA. For purposes of section 1102(b) of the Act, we consider a small rural hospital as a hospital that is located outside of a Metropolitan Statistical Area and has fewer than 50 beds. We have determined that this notice will not have a significant effect on the operations of a substantial number of small rural hospitals. Therefore, we are not preparing an analysis for section 1102(b) of the Act.

As stated in section IV of this notice, we estimate that the total increase in costs to beneficiaries associated with this notice is about $480 million due to (1) the increase in the deductible and coinsurance amounts and (2) the change in the number of deductibles and daily coinsurance amounts paid. Therefore, this notice is a major rule as defined in Title 5, United States Code, section 804(2) and is an economically significant rule under Executive Order 12866.

In accordance with the provisions of Executive Order 12866, this notice was reviewed by the Office of Management and Budget.

We have reviewed this notice under the threshold criteria of Executive Order 13132, Federalism. We have determined that it does not significantly affect the rights, roles, and responsibilities of States.

Authority: Sections 1813(b)(2) of the Social Security Act (42 U.S.C. 1395e–2(b)(2)).

(Catalog of Federal Domestic Assistance Program No. 93.773, Medicare—Hospital Insurance)

Dated: September 5, 2000.

Nancy-Ann Min DeParle,

Administrator, Health Care Financing Administration.

Dated: September 26, 2000.

Donna E. Shalala,

Secretary.

[FR Doc. 00–26846 Filed 10–18–00; 8:45 am]

BILLING CODE 4120–01–P

DEPARTMENT OF HEALTH AND HUMAN SERVICES

Health Care Financing Administration

[HCFA–8009–N]

Medicare Program; Monthly Actuarial Rates and Monthly Supplementary Medical Insurance Premium Rate Beginning January 1, 2001

AGENCY: Health Care Financing Administration (HCFA), HHS.

ACTION: Notice.

SUMMARY: In accordance with section 1839 of the Social Security Act, this notice announces the monthly actuarial rates for aged (aged 65 and over) and disabled (under age 65) enrollees in the Medicare Supplementary Medical Insurance (SMI) program for 2001. It also announces the monthly SMI premium to be paid by all enrollees during 2001. The monthly actuarial rates for 2001 are $101.00 for aged enrollees and $132.00 for disabled enrolless. The monthly SMI premium rate for 2001 is $50.00. This compares to projections of the 2001 SMI premium of $49.90 in the 2000 Trustees Report and $57.00 in the 1998 Trustees Report. The 2000 premium rate was $45.50 and a good portion of the increase for 2001 is due to additional amounts of home health being transferred into Part B (the 2001 monthly premium includes $3.09 for home health services being transferred into Part B). The 2001 Part B premium is not equal to 50 percent of the monthly actuarial rate because of the differential between the amount of home health that is transferred into Part B in 2001 (four-sixths) and the amount in Part B that is included in the premium calculation (four-sevenths).

EFFECTIVE DATE: January 1, 2001.

FOR FURTHER INFORMATION CONTACT: Carter S. Warfield, (410) 786–6396.

SUPPLEMENTARY INFORMATION:

I. Background

The Medicare Supplementary Medical Insurance (SMI) program is the voluntary Medicare Part B program that pays all or part of the costs for physicians' services, outpatient hospital services, home health services, services furnished by rural health clinics, ambulatory surgical centers, comprehensive outpatient rehabilitation facilities, and certain other medical and health services not covered by hospital insurance (HI) (Medicare Part A). The SMI program is available to individuals who are entitled to HI and to U.S. residents who have attained age 65 and are citizens, or aliens who were lawfully admitted for permanent residence and have resided in the United States for 5 consecutive years. This program requires enrollment and payment of monthly premiums, as provided in 42 CFR part 407, subpart B, and part 408, respectively. The difference between the premiums paid by all enrollees and total incurred costs is met from the general revenues of the Federal government.

The Secretary of Health and Human Services is required by section 1839 of the Social Security Act (the Act) to issue two annual notices relating to the SMI program.

One notice announces two amounts that, according to actuarial estimates, will equal respectively, one-half the expected average monthly cost of SMI for each aged enrollee (age 65 or over) and one-half the expected average monthly cost of SMI for each disabled enrollee (under age 65) during the year beginning the following January. These amounts are called ''monthly actuarial rates.''

The second notice announces the monthly SMI premium rate to be paid by aged and disabled enrollees for the year beginning the following January. (Although the costs to the program per disabled enrollee are different than for the aged, the law provides that they pay the same premium amount.) Beginning with the passage of section 203 of the Social Security Amendments of 1972 (Public Law 92–603), the premium rate, which was determined on a fiscal year basis, was limited to the lesser of the actuarial rate for aged enrollees, or the

current monthly premium rate increased by the same percentage as the most recent general increase in monthly Title II social security benefits.

However, the passage of section 124 of the Tax Equity and Fiscal Responsibility Act of 1982 (TEFRA) (Public Law 97–248) suspended this premium determination process. Section 124 of TEFRA changed the premium basis to 50 percent of the monthly actuarial rate for aged enrollees (that is, 25 percent of program costs for aged enrollees). Section 606 of the Social Security Amendments of 1983 (Public Law 98–21), section 2302 of the Deficit Reduction Act of 1984 (DRA 1984) (Public Law 98–369), section 9313 of the Consolidated Omnibus Budget Reconciliation Act of 1985 (COBRA 1985) (Public Law 99–272), section 4080 of the Omnibus Budget Reconciliation Act of 1987 (OBRA 1987) (Public Law 100–203), and section 6301 of the Omnibus Budget Reconciliation Act of 1989 (OBRA 1989) (Public Law 101–239) extended the provision that the premium be based on 50 percent of the monthly actuarial rate for aged enrollees (that is, 25 percent of program costs for aged enrollees). This extension expired at the end of 1990.

The premium rate for 1991 through 1995 was legislated by section 1839(e)(1)(B) of the Act, as added by section 4301 of the Omnibus Budget Reconciliation Act of 1990 (OBRA 1990) (Public Law 101–508). In January 1996, the premium determination basis would have reverted to the method established by the 1972 Social Security Act Amendments. However, section 13571 of the Omnibus Budget Reconciliation Act of 1993 (OBRA 1993) (Public Law 103–66) changed the premium basis to 50 percent of the monthly actuarial rate for aged enrollees (that is, 25 percent of program costs for aged enrollees) for 1996 through 1998.

Section 4571 of the Balanced Budget Act of 1997 (BBA 1997) (Public Law 105–33) permanently extended the provision that the premium be based on 50 percent of the monthly actuarial rate for aged enrollees (that is, 25 percent of program costs for aged enrollees).

BBA 1997 included a further provision affecting the calculation of the SMI actuarial rates and premiums for 1998 though 2003. Section 4611 of BBA 1997 modified the home health benefit payable under the HI program for individuals enrolled in the SMI program. In doing so, expenditures for home health services not considered ''post-institutional'' will be payable under the SMI program rather than the HI program beginning in 1998. However, section 4611(e)(1) of BBA 1997 requires that there be a transition from 1998 through 2002 for the aggregate amount of the expenditures transferred from the HI program to the SMI program. Section 4611(e)(2) also provides a specific yearly proportion for the transferred funds. The proportions are 1/6 for 1998, 1/3 for 1999, 1/2 for 2000, 2/3 for 2001, and 5/6 for 2002. For purposes of determining the correct amount of financing from general revenues of the Federal government, it is necessary to include only these transitional amounts in the monthly actuarial rates for both aged and disabled enrollees, rather than the total cost of the home health services being transferred. Accordingly, the actuarial rates shown in this announcement reflect the net transitional cost only.

Section 4611(e)(3) of BBA 1997 also specifies, for the purposes of determining the premium, that the monthly actuarial rate for enrollees age 65 and over shall be computed as though the transition would occur for 1998 through 2003 and that 1/7 of the cost would be transferred in 1998, 2/7 in 1999, 3/7 in 2000, 4/7 in 2001, 5/7 in 2002, and 6/7 in 2003. Therefore, the transition period for incorporating this home health transfer into the premium is 7 years while the transition period for including these services in the actuarial rate is 6 years. As a result, the premium rate for this year and each of the next 2 years, through 2003, will be less than 50 percent of the actuarial rate for aged enrollees announced by the Secretary.

New section 1933(c) of the Act, as added by section 4732(c) of BBA 1997, requires the Secretary to allocate money from the SMI trust fund to the State Medicaid programs for the purpose of providing Medicare Part B premium assistance from 1998 through 2002 for the section 1933 qualifying low-income Medicaid beneficiaries. This allocation, while not being a benefit expenditure, will be an expenditure of the trust fund and has been included in calculating the SMI actuarial rates for this year. The allocation will be included in calculating the SMI actuarial rates through 2002.

As determined according to section 1839(a)(3) of the Act and section 4611(e)(3) of BBA 1997, the premium rate for 2001 is $50.00. Included in the premium rate is $3.09 for home health services being transferred into Part B.

A further provision affecting the calculation of the SMI premium is section 1839(f) of the Act, as amended by section 211 of the Medicare Catastrophic Coverage Act of 1988 (Public Law 100–360). (The Medicare Catastrophic Coverage Repeal Act of 1989 (Public Law 101–234) did not repeal the revisions to section 1839(f) made by Public Law 100–360.) Section 1839(f) provides that if an individual is entitled to benefits under section 202 or 223 of the Act (the Old-Age and Survivors Insurance Benefit and the Disability Insurance Benefit, respectively) and has the SMI premiums deducted from these benefit payments, the premium increase will be reduced to avoid causing a decrease in the individual's net monthly payment. This occurs if the increase in the individual's social security benefit due to the cost-of-living adjustment under section 215(i) of the Act is less than the increase in the premium. Specifically, the reduction in the premium amount applies if the individual is entitled to benefits under section 202 or 223 of the Act for November and December of a particular year and the individual's SMI premiums for December and the following January are deducted from the respective month's section 202 or 223 benefits.

A check for benefits under section 202 or 223 is received in the month following the month for which the benefits are due. The SMI premium that is deducted from a particular check is the SMI payment for the month in which the check is received. Therefore, a benefit check for November is not received until December, but has the December's SMI premium deducted from it. This change, in effect, perpetuates former amendments that prohibited SMI premium increases from reducing an individual's benefits in years in which the dollar amount of the individual's cost-of-living increase in benefits was not at least as great as the dollar amount of the individual's SMI premium increase.

Generally, if a beneficiary qualifies for this protection that is, the beneficiary must have been in current payment status for November and December of the previous year, the reduced premium for the individual for that January and each of the succeeding 11 months for which he or she is entitled to benefits, under section 202 or 203 of the Act, is the greater of the following:

(1) The monthly premium for January reduced as necessary to make the December monthly benefits, after the deduction of the SMI premium for January, at least equal to the preceding November's monthly benefits, after the deduction of the SMI premium for December; or

(2) The monthly premium for that individual for that December.

In determining the premium limitations under section 1839(f) of the Act, the monthly benefits to which an individual is entitled under section 202

or 223 do not include retroactive adjustments or payments and deductions on account of work. Also, once the monthly premium amount has been established under section 1839(f) of the Act, it will not be changed during the year even if there are retroactive adjustments or payments and deductions on account of work that apply to the individual's monthly benefits.

Individuals who have enrolled in the SMI program late or have reenrolled after the termination of a coverage period are subject to an increased premium under section 1839(b) of the Act. The increase is a percentage of the premium and is based on the new premium rate before any reductions under section 1839(f) are made.

II. Notice of Monthly Actuarial Rates and Monthly Premium Rate

The monthly actuarial rates applicable for 2001 are $101.00 for enrollees age 65 and over, and $132.20 for disabled enrollees under age 65. Section III of this notice gives the actuarial assumptions and bases from which these rates are derived. The monthly premium rate will be $50.00 during 2001. Included in the monthly premium rate is $3.09 for home health services being transferred into Part B.

III. Statement of Actuarial Assumptions and Bases Employed in Determining the Monthly Actuarial Rates and the Monthly Premium Rate for the Supplementary Medical Insurance Program Beginning January 2001

A. Actuarial Status of the Supplementary Medical Insurance Trust Fund

Under the law, the starting point for determining the monthly premium is the amount that would be necessary to finance the SMI program on an incurred basis. This is the amount of income that would be sufficient to pay for services furnished during that year (including associated administrative costs) even though payment for some of these services will not be made until after the close of the year. The portion of income required to cover benefits not paid until after the close of the year, is added to the trust fund and used when needed.

The rates are established prospectively and are, therefore, subject to projection error. Additionally, legislation enacted after the financing has been established, but effective for the period in which the financing has been set, may affect program costs. As a result, the income to the program may not equal incurred costs. Therefore, trust fund assets should be maintained at a level that is adequate to cover a moderate degree of variation between actual and projected costs, and the amount of incurred, but unpaid expenses. An appropriate level for assets to cover a moderate degree of variation between actual and projected costs depends on numerous factors. The most important of these factors are: (1) The difference from prior years between the actual performance of the program and estimates made at the time financing was established, and (2) the expected relationship between incurred and cash expenditures. Ongoing analysis is made of both factors as the trends vary over time.

Table 1 summarizes the estimated actuarial status of the trust fund as of the end of the financing period for 1999 and 2000.

TABLE 1.—ESTIMATED ACTUARIAL STATUS OF THE SUPPLEMENTARY MEDICAL INSURANCE TRUST FUND AS OF THE END OF THE FINANCING PERIOD

[In millions of dollars]

Financing period ending	Assets	Liabilities	Assets less liabilities
Dec. 31, 1999 ..	$44,787	$6,502	$38,284
Dec. 31, 2000 ..	40,351	5,398	34,953

B. Monthly Actuarial Rate for Enrollees Age 65 and Older

The monthly actuarial rate for enrollees age 65 and older is one-half of the monthly projected cost of benefits, the Medicaid transfer (for 1998 through 2002), and administrative expenses for each enrollee age 65 and older, adjusted to allow for interest earnings on assets in the trust fund and a contingency margin. The contingency margin is an amount appropriate to provide for a moderate degree of variation between actual and projected costs and to amortize any surplus or unfunded liabilities. As noted in section I of this announcement, section 4611(e)(2) of BBA 1997 requires that only ⅔ of the cost of the home health services being transferred be included in the actuarial rate for 2001, rather than the full cost of such benefits.

The monthly actuarial rate for enrollees age 65 and older for 2001 is determined by first establishing per-enrollee cost by type of service from program data through 1999 and then projecting these costs for subsequent years. The projection factors used are shown in Table 2. The projected values for financing periods from January 1, 1998 through December 31, 2001, are shown in Table 3.

The projected monthly rate required to pay for one-half of the total of benefits, the transfer to Medicaid, and administrative costs for enrollees age 65 and over for 2001 is $114.74. Included in the total of $114.74 is $8.87 for home health services and $22.12 for managed care services. The amount of $8.87 for home health services includes (1) the full cost of fee-for-service home health services being transferred from the HI program as a result of BBA 1997 as if the transition did not apply ($8.67) as well as (2) the cost of furnishing all home health services to those individuals enrolled in SMI only ($0.20). The amount of $22.12 for managed care services includes (1) The full cost of managed care home health services being transferred from the HI program as a result of BBA 1997 as if the transition did not apply ($2.14) as well as (2) the cost of furnishing all other SMI services to those individuals enrolled in managed care plans ($19.98). Since section 4611(e)(2) of BBA 1997 requires that only ⅔ of the cost for those services being transferred be included in the actuarial rate for 2001, the monthly actuarial rate provides for an adjustment of −$3.60, representing ⅓ of the full cost of such services. The monthly actuarial rate of $101.00 also provides an adjustment of −$3.44 for interest earnings and −$6.70 for a contingency margin. Based on current estimates, it appears that the assets are more than sufficient to cover the amount of incurred but unpaid expenses and to provide for a moderate degree of variation between actual and projected costs. Thus, a negative contingency margin is needed to reduce assets to a more appropriate level.

C. Monthly Actuarial Rate for Disabled Enrollees

Disabled enrollees are those persons enrolled in SMI because of entitlement (before age 65) to disability benefits for more than 24 months or because of entitlement to Medicare under the end-stage renal disease program. Projected monthly costs for disabled enrollees (other than those suffering from end-stage renal disease) are prepared in a fashion parallel to the projection for the aged using appropriate actuarial assumptions (see Table 2). Costs for the end-stage renal disease program are projected differently because of the different nature of services offered by the program. The combined results for all disabled enrollees are shown in Table 4.

The projected monthly rate required to pay for one-half of the total of benefits, the transfer to Medicaid, and administrative costs for disabled enrollees for 2001 is $128.77. Included in the total of $128.77 is $6.59 for home health services and $11.18 for managed care services. The amount of $6.59 is the full cost of the home health services being transferred from the HI program as a result of BBA 1997 as if the transition did not apply. The amount of $11.18 for managed care services includes (1) the full cost of managed care home health services being transferred from the HI program as a result of BBA 1997 as if the transition did not apply ($1.11) as well as (2) the cost of furnishing all other SMI services to those individuals enrolled in managed care plans ($10.07). Since section 4611(e)(2) of BBA 1997 requires that only ⅔ of the cost for those services being transferred be included in the actuarial rate for 2001, the monthly actuarial rate provides for an adjustment of −$2.57, representing ⅓ of the full cost of such services. The monthly actuarial rate of $132.20 also provides an adjustment of −$1.29 for interest earnings and $7.29 for a contingency margin. Based on current estimates, it appears that the assets are not sufficient to cover the amount of incurred, but unpaid expenses and to provide for a moderate degree of variation between actual and projected costs. Thus, a positive contingency margin is needed to increase assets to a more appropriate level.

D. Sensitivity Testing

Several factors contribute to uncertainty about future trends in medical care costs. It is appropriate to test the adequacy of the rates using alternative assumptions. The results of those assumptions are shown in Table 5. One set represents increases that are lower and is, therefore, more optimistic than the current estimate. The other set represents increases that are higher and is therefore, more pessimistic than the current version. The values for the alternative assumptions were determined from a statistical analysis of the historical variation in the respective increase factors.

Table 5 indicates that, under the assumptions used in preparing this report, the monthly actuarial rates would result in an excess of assets over liabilities of $30,528 million by the end of December 2001. This amounts to 27.1 percent of the estimated total incurred expenditures for the following year. Assumptions that are somewhat more pessimistic (and therefore, test the adequacy of the assets to accommodate projection errors) produce a surplus of $17,949 million by the end of December 2001, which amounts to 14.2 percent of the estimated total incurred expenditures for the following year. Under fairly optimistic assumptions, the monthly actuarial rates would result in a surplus of $44,350 million by the end of December 2001, which amounts to 44.4 percent of the estimated total incurred expenditures for the following year.

E. Premium Rate

As determined by section 1839(a)(3) of the Act and section 4611(e)(3) of BBA 1997, the monthly premium rate for 2001, for both aged and disabled enrollee, is $50.00.

TABLE 2.—PROJECTION FACTORS [1] 12-MONTH PERIODS ENDING DECEMBER 31 OF 1998–2001

[In percent]

Calendar year	Physicians' services		Durable medical equipment	Carrier lab [4]	Other carrier services [5]	Outpatient hospital	Home health agency	Hospital lab [6]	Other intermediary services [7]	Managed care
	Fees [2]	Residual [3]								
Aged:										
1998 ..	2.9	2.7	−1.2	−9.2	11.1	1.3	[8] 2,527.5	3.7	−2.5	24.5
1999 ..	2.7	1.2	6.4	−0.1	10.7	5.1	−23.0	1.0	−19.2	9.2
2000 ..	6.0	0.8	8.1	4.0	9.3	7.3	16.1	4.3	11.2	−0.6
2001 ..	6.1	1.5	6.7	2.0	6.9	10.6	16.5	3.7	5.7	2.0
Disabled:										
1998 ..	2.9	2.4	2.7	−6.4	9.6	−0.8	([8])	−0.8	−20.9	14.2
1999 ..	2.7	0.4	5.4	2.1	11.0	6.1	−16.0	2.6	−12.4	2.9
2000 ..	6.0	0.8	7.1	3.9	7.4	5.8	5.7	4.6	12.9	−3.1
2001 ..	6.1	1.4	6.6	1.9	6.8	11.7	15.8	3.6	5.4	2.0

[1] All values for services other than managed care are per fee-for-service enrollee. Managed care values are per managed care enrollee.
[2] As recognized for payment under the program.
[3] Increase in the number of services received per enrollee and greater relative use of more expensive services.
[4] Includes services paid under the lab fee schedule furnished in the physicians office or an independent lab.
[5] Includes ambulatory surgical center facility costs, ambulance services, parenteral and enteral drug costs, supplies, etc.
[6] Includes services paid under the lab fee schedule furnished in the outpatient department of a hospital.
[7] Includes services furnished in rehabilitation and psychiatric hospitals, dialysis facilities, rural health clinics, federally qualified health centers, etc.
[8] Effective January 1, 1998, the coverage of home health agency services not considered ''post-institutional'' for those individuals entitled to HI and enrolled in SMI were transferred from the HI program to the SMI program. As a result, as of January 1, 1998, there was a large increase in SMI expenditures for these services for the aged enrollees, and SMI coverage for these services will resume for disabled enrollees.

TABLE 3.—DERIVATION OF MONTHLY ACTUARIAL RATE FOR ENROLLEES AGE 65 AND OVER FOR FINANCING PERIODS ENDING DECEMBER 31, 1998 THROUGH DECEMBER 31, 2001

	Financing periods			
	CY 1998	CY 1999	CY 2000	CY 2001
Covered services (at level recognized):				
Physician Fee Schedule	$49.64	$50.84	$58.63	$54.39
Durable Medical Equipment	5.58	5.85	6.33	6.77
Carrier Lab [1]	2.32	2.29	2.38	2.43
Other Carrier Services [2]	8.51	9.29	10.16	10.88

TABLE 3.—DERIVATION OF MONTHLY ACTUARIAL RATE FOR ENROLLEES AGE 65 AND OVER FOR FINANCING PERIODS ENDING DECEMBER 31, 1998 THROUGH DECEMBER 31, 2001—Continued

	Financing periods			
	CY 1998	CY 1999	CY 2000	CY 2001
Outpatient Hospital	18.73	19.41	20.85	23.11
Home health	[5] 8.62	[5] 6.54	[5] 7.59	[5] 8.87
Hospital Lab [3]	1.57	1.56	1.63	1.69
Other Intermediary Services [4]	6.81	5.42	6.04	6.39
Managed Care	[6] 19.02	[6] 22.06	[6] 21.85	[6] 22.12
Total services	120.79	123.26	131.22	140.88
Cost-sharing:				
Deductible	−3.81	−3.83	−3.83	−3.85
Coinsurance	−22.32	−22.92	−23.76	−24.28
Total benefits	94.67	96.52	103.63	112.76
Transfer to Medicaid	[7] 0.00	[7] 0.00	[7] 0.06	[7] 0.07
Administrative expenses	1.60	1.77	1.88	1.92
Incurred expenditures	96.26	98.29	105.57	114.74
Value of interest	−2.04	−3.49	−3.76	−3.44
Adjustment for home health agency services transferred from HI	[8] −8.54	[8] −5.35	[8] −4.66	[8] −3.60
Contingency margin for projection error and to amortize the surplus or deficit	2.21	2.84	−5.25	−6.70
Monthly actuarial rate	87.90	92.30	91.90	101.00

[1] Includes services paid under the lab fee schedule furnished in the physicians office or an independent lab.
[2] Includes ambulatory surgical center facility costs, ambulance services, parenteral and enteral drug costs, supplies, etc.
[3] Includes services paid under the lab fee schedule furnished in the outpatient department of a hospital.
[4] Includes services furnished in rehabilitation and psychiatric hospitals, dialysis facilities, rural health clinics, federally qualified health centers, etc.
[5] This amount includes the full cost of the fee-for-service home health services being transferred from the HI program as a result of BBA 1997 as if the transition did not apply, as well as the cost of furnishing all home health services to those individuals enrolled in SMI only.
[6] This amount includes the full cost of the managed care home health services being transferred from the HI program as a result of BBA 1997 as if the transition did not apply, as well as the cost of furnishing all other SMI services to individuals enrolled in managed care.
[7] Section 1933(c)(2) of the Act, as added by section 4732(c) of BBA 1997, allocates an amount to be transferred from the SMI trust fund to the state Medicaid programs. This transfer is for the purpose of paying the SMI premiums for certain low-income beneficiaries. It is not a benefit expenditure but is used in determining the SMI actuarial rates since it is an expenditure of the trust fund.
[8] Section 4611 of BBA 1997 specifies that expenditures for home health services not considered ''post-institutional'' will be payable under the SMI program rather than the HI program beginning in 1998. However, section 4611(e)(1) requires there be a transition from 1998 through 2002 for the aggregate amount of the expenditures transferred from the HI program to the SMI program. For 1998, the amount transferred is 1/6 of the full cost for such services, for 1999, 1/3, for 2000, 1/2, and for 2001, 2/3. Therefore, the adjustment for 1998 represents 5/6 of the full cost, for 1999, 2/3, for 2000, 1/2, and for 2001, 1/3. This amount adjusts the actuarial rate to reflect the correct amount attributable to home health services.

TABLE 4.—DERIVATION OF MONTHLY ACTUARIAL RATE FOR ENROLLEES AGE 65 AND OVER FOR FINANCING PERIODS ENDING DECEMBER 31, 1998 THROUGH DECEMBER 31, 2001

	Financing periods			
	CY 1998	CY 1999	CY 2000	CY 2001
Covered services (at level recognized):				
Physician Fee Schedule	$52.21	$52.98	$56.66	$60.93
Durable Medical Equipment	9.09	9.45	10.11	10.77
Carrier Lab [1]	2.79	2.72	2.83	2.89
Other Carrier Services [2]	9.70	10.31	11.09	11.86
Outpatient Hospital	23.16	24.07	25.52	28.45
Home health	[5] 6.50	[5] 5.40	[5] 5.70	[5] 6.59
Hospital Lab [3]	2.56	2.39	2.45	2.54
Other Intermediary Services [4]	28.12	28.02	29.34	30.41
Managed Care	[6] 9.72	[6] 10.94	[6] 10.77	[6] 11.18
Total services	143.84	146.28	154.46	165.62
Cost-sharing:				
Deductible	−3.53	−3.54	−3.56	−3.56
Coinsurance	−32.65	−33.56	−34.64	−35.50
Total benefits	107.65	109.17	116.26	126.56
Transfer to Medicaid	[7] 0.00	[7] 0.00	[7] 0.04	[7] 0.05
Administrative expenses	1.87	2.03	2.11	2.15
Incurred expenditures	109.53	111.20	118.42	128.77
Value of interest	−0.30	−1.14	−0.81	−1.29
Adjustment for home health agency services transferred from HI	[8] −6.21	[8] −4.20	[8] −3.33	[8] −2.57

TABLE 4.—DERIVATION OF MONTHLY ACTUARIAL RATE FOR ENROLLEES AGE 65 AND OVER FOR FINANCING PERIODS ENDING DECEMBER 31, 1998 THROUGH DECEMBER 31, 2001—Continued

	Financing periods			
	CY 1998	CY 1999	CY 2000	CY 2001
Contingency margin for projection error and to amortize the surplus or deficit	−5.92	−2.86	−6.82	−7.29
Monthly actuarial rate	97.10	103.00	121.10	132.20

[1] Includes services paid under the lab fee schedule furnished in the physicians office or an independent lab.
[2] Includes ambulatory surgical center facility costs, ambulance services, parenteral and enteral drug costs, supplies, etc.
[3] Includes services paid under the lab fee schedule furnished in the outpatient department of a hospital.
[4] Includes services furnished in rehabilitation and psychiatric hospitals, dialysis facilities, rural health clinics, federally qualified health centers, etc.
[5] This amount includes the full cost of the fee-for-service home health services being transferred from the HI program as a result of BBA 1997 as if the transition did not apply, as well as the cost of furnishing all home health services to those individuals enrolled in SMI only.
[6] This amount includes the full cost of the managed care home health services being transferred from the HI program as a result of BBA 1997 as if the transition did not apply, as well as the cost of furnishing all other SMI services to individuals enrolled in managed care.
[7] Section 1933(c)(2) of the Act, as added by section 4732(c) of BBA 1997, allocates an amount to be transferred from the SMI trust fund to the state Medicaid programs. This transfer is for the purpose of paying the SMI premiums for certain low-income beneficiaries. It is not a benefit expenditure but is used in determining the SMI actuarial rates since it is an expenditure of the trust fund.
[8] Section 4611 of BBA 1997 specifies that expenditures for home health services not considered ''post-institutional'' will be payable under the SMI program rather than the HI program beginning in 1998. However, section 4611(e)(1) requires there be a transition from 1998 through 2002 for the aggregate amount of the expenditures transferred from the HI program to the SMI program. For 1998, the amount transferred is ⅙ of the full cost for such services, for 1999, ⅓, for 2000, ½, and for 2001, ⅔. Therefore, the adjustment for 1998 represents ⅚ of the full cost, for 1999, ⅔, for 2000, ½, and for 2001, ⅓. This amount adjusts the actuarial rate to reflect the correct amount attributable to home health services.

TABLE 5.—ACTUARIAL STATUS OF THE SMI TRUST FUND UNDER THREE SETS OF ASSUMPTIONS FOR FINANCING PERIODS THROUGH DECEMBER 31, 2001

As of December 31	1999	2000	2001
This Projection:			
Actuarial Status (in millions):			
Assets	$44,787	$40,351	$37,737
Liabilities	6,502	5,398	6,209
Assets Less Liabilities	38,284	34,953	30,528
Ratio (in percent) [1]	41.4	34.0	27.1
Low Cost Projection:			
Actuarial Status (in millions):			
Assets	44,787	44,919	50,192
Liabilities	6,502	4,890	5,842
Assets Less Liabilities	38,284	40,029	44,350
Ratio (in percent) [1]	43.9	42.6	44.4
High Cost Projection:			
Actuarial Status (in millions):			
Assets	44,787	35,989	24,546
Liabilities	6,502	5,882	6,597
Assets Less Liabilities	38,284	30,107	17,949
Ratio (in percent)[1]	39.4	27.0	14.2

[1] Ratio of assets less liabilities at the end of the year to the total incurred expenditures during the following year, expressed as a percent.

IV. Regulatory Impact Analysis

We have examined the impacts of this notice as required by Executive Order 12866 and the Regulatory Flexibility Act (RFA) (Public Law 96–354). Executive Order 12866 directs agencies to assess all costs and benefits of available regulatory alternatives and, if regulation is necessary, to select regulatory approaches that maximize net benefits (including potential economic, environmental, public health and safety effects, distributive impacts, and equity).

The RFA requires agencies to analyze options for regulatory relief of small businesses. For purposes of the RFA, small entities include small businesses, nonprofit organizations, and government agencies. Most hospitals and most other providers and suppliers are small entities, either by nonprofit status or by having revenues of $5 million or less annually. For purposes of the RFA, States and individuals are not considered to be small entities.

In addition, section 1102(b) of the Act requires us to prepare an RIA if a rule may have a significant impact on the operations of a substantial number of small rural hospitals. This analysis must conform to the provisions of section 603 of the RFA. For purposes of section 1102(b) of the Act, we define a small rural hospital as a hospital that is located outside of a Metropolitan Statistical Area and has fewer than 50 beds. We have determined that this notice will not have a significant effect on a substantial number of small entities nor on the operations of a substantial number of small rural hospitals. Therefore, we are not preparing an analysis for section 1102(b) of the Act.

Executive Order 13132 establishes certain requirements that an agency must meet when it promulgates a proposed rule (and subsequent final rule) that imposes substantial direct compliance costs on State and local

governments, preempts State law, or otherwise has Federalism implications. We have determined that this notice does not significantly affect the rights, roles, and responsibilities of States.

This notice announces that the monthly actuarial rates applicable for 2001 are $101.00 for enrollees age 65 and over, and $132.20 for disabled enrollees under age 65. It also announces that the monthly SMI premium rate for calendar year 2001 is $50.00. The SMI premium rate of $50.00 is 9.9% higher than the $45.50 premium rate for 2000. We estimate that the cost of this increase from the current premium to the approximately 38 million SMI enrollees will be about $2.042 billion for 2001. Therefore, this notice is a major rule as defined in Title 5, United States Code, section 804(2) and is an economically significant rule under Executive Order 12866.

In accordance with the provisions of Executive Order 12866, this notice was reviewed by the Office of Management and Budget.

V. Waiver of Proposed Notice

The Medicare statute requires the publication of the monthly actuarial rates and the Part B premium amounts in September. We ordinarily use general notices, rather than notice and comment rulemaking procedures, to make such announcements. In doing so, we note that under the Administrative Procedure Act; interpretive rules; general statements of policy; and rules of agency organization, procedure, or practice are excepted from the requirements of notice and comment rulemaking.

We considered publishing a proposed notice to provide a period for public comment. However, we may waive that procedure if we find good cause that prior notice and comment are impracticable, unnecessary, or contrary to the public interest. We find that the procedure for notice and comment is unnecessary because the formula used to calculate the SMI premium is statutorily directed, and we can exercise no discretion in following that formula. Moreover, the statute establishes the time period for which the premium rates will apply, and delaying publication of the SMI premium rate would be contrary to the public interest. Therefore, we find good cause to waive publication of a proposed notice and solicitation of public comments.

(Section 1839 of the Social Security Act; 42 U.S.C. 1395r)

(Catalog of Federal Domestic Assistance Program No. 93.774, Medicare—Supplementary Medical Insurance)

Dated: September 25, 2000.

Nancy-Ann Min DeParle,

Administrator, Health Care Financing Administration.

Dated: September 26, 2000.

Donna E. Shalala,

Secretary.

[FR Doc. 00–26848 Filed 10–18–00; 8:45 am]

BILLING CODE 4120–01–P

DEPARTMENT OF HEALTH AND HUMAN SERVICES

Health Care Financing Administration

[HCFA–8008–N]

RIN 0938–AK34

Medicare Program; Part A Premium for 2001 for the Uninsured Aged and for Certain Disabled Individuals Who Have Exhausted Other Entitlement

AGENCY: Health Care Financing Administration (HCFA), HHS.

ACTION: Notice.

SUMMARY: This notice announces the hospital insurance premium for calendar year 2001 under Medicare's hospital insurance program (Part A) for the uninsured aged and for certain disabled individuals who have exhausted other entitlement. The monthly Medicare Part A premium for the 12 months beginning January 1, 2001 for these individuals is $300. The reduced premium for certain other individuals as described in this notice is $165. Section 1818(d) of the Social Security Act specifies the method to be used to determine these amounts.

EFFECTIVE DATE: This notice is effective on January 1, 2001.

FOR FURTHER INFORMATION CONTACT: Clare McFarland, (410) 786–6390.

SUPPLEMENTARY INFORMATION:

I. Background

Section 1818 of the Social Security Act (the Act) provides for voluntary enrollment in the Medicare hospital insurance program (Medicare Part A), subject to payment of a monthly premium, of certain persons aged 65 and older, who are uninsured for social security or railroad retirement benefits and do not otherwise meet the requirements for entitlement to Medicare Part A. (Persons insured under the Social Security or Railroad Retirement Acts need not pay premiums for hospital insurance.)

Section 1818(d) of the Act requires us to estimate, on an average per capita basis, the amount to be paid from the Federal Hospital Insurance Trust Fund for services performed, and related administrative costs incurred, in the following calendar year with respect to individuals aged 65 and over who will be entitled to benefits under Medicare Part A. We must then, during September of each year, determine the monthly actuarial rate (the per capita amount estimated above divided by 12) and publish the dollar amount for the monthly premium in the succeeding calendar year. If the premium is not a multiple of $1, the premium is rounded to the nearest multiple of $1 (or, if it is a multiple of 50 cents but not of $1, it is rounded to the next highest $1). The 2000 premium under this method was $301 and was effective January 1, 2000. (See 64 FR 57110, October 22, 1999.)

Section 1818(d)(2) of the Act requires us to determine and publish, during September of each calendar year, the amount of the monthly premium for the following calendar year for persons who voluntarily enroll in Medicare Part A.

Section 1818A of the Act provides for voluntary enrollment in Medicare Part A, subject to payment of a monthly premium, of certain disabled individuals who have exhausted other entitlement. These individuals are those not now entitled but who have been entitled under section 226(b) of the Act, who continue to have the disabling impairment upon which their entitlement was based, and whose entitlement ended solely because they had earnings that exceeded the substantial gainful activity amount (as defined in section 223(d)(4) of the Act).

Section 1818A(d)(2) of the Act specifies that the provisions relating to premiums under section 1818(d) through (f) of the Act for the aged will also apply to certain disabled individuals as described above. Therefore, the premium amounts applicable to the aged, as announced in this notice, also apply to these certain disabled individuals.

Section 13508 of the Omnibus Budget Reconciliation Act of 1993 (Public Law 103–66) amended section 1818(d) of the Act to provide for a reduction in the monthly premium amount for certain voluntary enrollees. The reduction applies for an individual who is not eligible for social security or railroad retirement benefits but who, with respect to a month, as of the last day of the previous month—

- Had at least 30 quarters of coverage under title II of the Act;
- Was married and had been married for the previous 1-year period to a person who had at least 30 quarters of coverage;
- Had been married to a person for at least 1 year at the time of the person's

death if at such time the person had at least 30 quarters of coverage; or

• Is divorced from a person and had been married to the person for at least 10 years at the time of the divorce, if at the time of the divorce, the person had at least 30 quarters of coverage.

For calendar year 2001, section 1818(d)(4)(A) of the Act specifies that the monthly premium that these individuals will pay for calendar year 2001 will be equal to the monthly premium for aged voluntary enrollees reduced by 45 percent.

II. Premium Amount for 2001

Under the authority of sections 1818(d)(2) and 1818A(d)(2) of the Act, the Secretary has determined that the monthly Medicare Part A hospital insurance premium for the uninsured aged and for certain disabled individuals who have exhausted other entitlement for the 12 months beginning January 1, 2001 is $300.

The monthly premium for those individuals subject to a 45 percent reduction in the monthly premium for the 12-month period beginning January 1, 2001 is $165.

III. Statement of Actuarial Assumptions and Bases Employed in Determining the Monthly Premium Rate

As discussed in section I of this notice, the monthly Medicare Part A premium for 2001 is equal to the estimated monthly actuarial rate for 2001 rounded to the nearest multiple of $1. The monthly actuarial rate is defined to be one-twelfth of the average per capita amount that the Secretary estimates will be paid from the Federal Hospital Insurance Trust Fund for services performed and related administrative costs incurred in 2001 for individuals aged 65 and over who will be entitled to benefits under the hospital insurance program during 2001. Thus, the number of individuals aged 65 and over who will be entitled to hospital insurance benefits and the costs incurred on behalf of these beneficiaries must be projected to determine the premium rate.

The principal steps involved in projecting the future costs of the hospital insurance program are (a) establishing the present cost of services furnished to beneficiaries, by type of service, to serve as a projection base; (b) projecting increases in payment amounts for each of the various service types; and (c) projecting increases in administrative costs. Establishing historical Medicare Part A enrollment and projecting future enrollment, by type of beneficiary, is part of this process.

We have completed all of the above steps, basing our projections for 2001 on (a) current historical data and (b) projection assumptions under current law from the Midsession Review of the President's Fiscal Year 2001 Budget. It is estimated that in calendar year 2001, 33.809 million people aged 65 and over will be entitled to Medicare Part A benefits (without premium payment), and that these individuals will, in 2001, incur $121.835 billion of benefits for services performed and related administrative costs. Thus, the estimated monthly average per capita amount is $300.30 and the monthly premium is $300. The monthly premium for those individuals eligible to pay this premium reduced by 45 percent is $165.

IV. Costs to Beneficiaries

The 2001 Medicare Part A premium of $300 is about 0.3 percent lower than the 2000 premium of $301.

We estimate that there will be, in calendar year 2001, approximately 382,000 enrollees who do not otherwise meet the requirements for entitlement, and will voluntarily enroll in Medicare Part A by paying the full premium. We estimate an additional 6,000 enrollees will be paying the reduced premium. The estimated overall effect of the changes in the premium will be a savings to these voluntary enrollees of about $5 million.

V. Waiver of Notice of Proposed Rulemaking

The Medicare statute, as discussed previously, requires publication of the Medicare Part A hospital insurance premium for the upcoming calendar year during September of each year. The amounts are determined according to the statute. As has been our custom, we use general notices, rather than formal notice and comment rulemaking procedures, to make the announcements. In doing so, we acknowledge that, under the Administrative Procedure Act, interpretive rules, general statements of policy, and rules of agency organization, procedure, or practice are excepted from the requirements of notice and comment rulemaking.

We considered publishing a proposed notice to provide a period for public comment. However, we may waive that procedure if we find good cause that prior notice and comment are impracticable, unnecessary, or contrary to the public interest. We find that the procedure for notice and comment is unnecessary because the formula used to calculate the Part A hospital insurance premium is statutorily directed, and we can exercise no discretion in following that formula. Moreover, the statute established the time period for which the premium will apply and delaying publication of the premium amount would be contrary to the public interest. Therefore, we find good cause to waive publication of a proposed notice and solicitation of public comments.

VI. Regulatory Impact Statement

We have examined the impacts of this notice as required by Executive Order 12866 and the Regulatory Flexibility Act (RFA) (Public Law 96–354). Executive Order 12866 directs agencies to assess all costs and benefits of available regulatory alternatives and, when regulation is necessary, to select regulatory approaches that maximize net benefits (including potential economic, environmental, public health and safety effects; distributive impacts; and equity). The RFA requires agencies to analyze options for regulatory relief for small entities. For purposes of the RFA, States and individuals are not considered small entities.

Also, section 1102(b) of the Act requires the Secretary to prepare a regulatory impact analysis for any notice that may have a significant impact on the operations of a substantial number of small rural hospitals. Such an analysis must conform to the provisions of section 604 of the RFA. For purposes of section 1102(b) of the Act, we consider a small rural hospital as a hospital that is located outside of a Metropolitan Statistical Area and has fewer than 50 beds.

As stated previously in section IV, the estimated overall effect of the changes in the premium will be a savings to voluntary enrollees of about $5 million. Therefore, this notice is not a major rule as defined in Title 5, United States Code Annotated, section 804(2) and is not an economically significant regulatory action under Executive Order 12866.

Therefore, we have determined, and the Secretary certifies, that this notice will not result in a significant impact on a substantial number of small entities and will not have a significant impact on the operations of a substantial number of small rural hospitals. Therefore, we are not preparing analyses for either the RFA or section 1102(b) of the Act.

In accordance with the provisions of Executive Order 12866, this notice was reviewed by the Office of Management and Budget.

We have reviewed this notice under the threshold criteria of Executive Order 13132, Federalism. We have determined that it does not significantly affect the

rights, roles, and responsibilities of States.

Authority: Sections 1818(d)(2) and 1818A(d)(2) of the Social Security Act (42 U.S.C. 1395i–2(d)(2) and 1395i–2a(d)(2)).

(Catalog of Federal Domestic Assistance Program No. 93.773, Medicare—Hospital Insurance)

Dated: September 25, 2000.

Nancy-Ann Min DeParle,

Administrator, Health Care Financing Administration.

Dated: September 26, 2000.

Donna E. Shalala,

Secretary.

[FR Doc. 00–26847 Filed 10–18–00; 8:45 am]

BILLING CODE 4120–01–P

DEPARTMENT OF HEALTH AND HUMAN SERVICES

Health Resources and Services Administration

Agency Information Collection Activities: Proposed Collection: Comment Request

In compliance with the requirement for opportunity for public comment on proposed data collection projects (section 3506(c)(2)(A) of Title 44, United States Code, as amended by the Paperwork Reduction Act of 1995, Public Law 104–13), the Health Resources and Services Administration (HRSA) publishes periodic summaries of proposed projects being developed for submission to OMB under the Paperwork Reduction Act of 1995. To request more information on the proposed project or to obtain a copy of the data collection plans and draft instruments, call the HRSA Reports Clearance Officer on (301) 443–1129.

Comments are invited on: (a) Whether the proposed collection of information is necessary for the proper performance of the functions of the agency, including whether the information shall have practical utility; (b) the accuracy of the agency's estimate of the burden of the proposed collection of information; (c) ways to enhance the quality, utility, and clarity of the information to be collected; and (d) ways to minimize the burden of the collection of information on respondents, including through the use of automated collection techniques or other forms of information technology.

Proposed Project: Performance Standards for Special Projects of Regional or National Significance (SPRANS), and Community Integrated Service Systems (CISS) Projects—(NEW)

The Health Resources and Services Administration (HRSA) proposes to modify reporting requirements for SPRANS projects, CISS projects, and other grant programs administered by the Maternal and Child Health Bureau (MCHB) to include national performance measures being developed in accordance with the requirements of the ''Government Performance and Results Act (GPRA) of 1993'' (Pub. L. 103–62).

This act requires the establishment of measurable goals for Federal programs that can be reported as part of the budgetary process, thus linking funding decisions with performance. Performance measures for States have already been established under the block grant provisions of Title V. Performance measures for other MCHB-funded grant programs are currently being finalized, and will be sent to the Office of Management and Budget for approval.

There are approximately 30 proposed new performance measures, however, some measures are specific to certain types of programs, and will not apply to all grantees. Furthermore, the measures are expected to be based primarily on existing data.

The estimated response burden is as follows:

Type of form	Number of respondents	Responses per respondent	Burden hours per response	Total burden hours
Application and Annual Report	750	1	8	6000
Total	750			6000

Send comments to Susan G. Queen, Ph.D., HRSA Reports Clearance Officer, Room 14–33, Parklawn Building, 5600 Fishers Lane, Rockville, MD 20857. Written comments should be received within 60 days of this notice.

Dated: October 13, 2000.

Jane M. Harrison,

Director, Division of Policy Review and Coordination.

[FR Doc. 00–26895 Filed 10–18–00; 8:45 am]

BILLING CODE 4160–15–U

DEPARTMENT OF HEALTH AND HUMAN SERVICES

Health Resources and Services Administration

Agency Information Collection Activities: Submission for OMB Review; Comment Request

Periodically, the Health Resources and Services Administration (HRSA) publishes abstracts of information collection requests under review by the Office of Management and Budget, in compliance with the Paperwork Reduction Act of 1995 (44 U.S.C. Chapter 35). To request a copy of the clearance requests submitted to OMB for review, call the HRSA Reports Clearance Office on (301) 443–1129.

The following request has been submitted to the Office of Management and Budget for review under the Paperwork Reduction Act of 1995:

Proposed Project: Ryan White Comprehensive AIDS Resources Emergency Act of 1990—Title IV (OMB #0915–0206)—Extension

This is a request for extension of the reporting system of the Ryan White Comprehensive AIDS Resources Emergency (CARE) Act of 1990, Title IV as amended by the Ryan White CARE Act Amendments of 1996. It authorizes a reporting system to collect information from grantees and the service providers that are their subcontractors as governed under Section 2671 of the Public Health Service (PHS) Act (42 U.S.C. 300ff–71).

Title IV provides support for coordinated HIV services and access to research for children, youth, women, and families. It supports efforts to develop comprehensive, coordinated,

culturally competent, family-centered systems of care and to provide access to research for those infected or affected by HIV infection. The Title IV program supports a broad variety of interventions in health care delivery that are designed to link clients receiving health care to other essential and supporting services and to clinical research. Grants are made to public and private non-profit health centers and other appropriate public or non-profit private entities that are linked to a comprehensive health care system. This system includes clinical research for children, youth, and women. The HIV/AIDS Bureau (HAB) within HRSA administers funds for Title IV of the CARE Act.

There are 53 grantees under Title IV's Children, Youth, Women and Families Program, with approximately 125 affiliated service providers, for a total of 178 entities who report information about the clients they serve and the services they provide. Grantees are located in 27 States, Puerto Rico and the District of Columbia.

ESTIMATED BURDEN HOURS

Form name	Number of respondents	Responses per respondent	Total responses	Hours per response	Total burden hours
Designation of Local Reporting Entities—Table 1A	53	1	53	.25	13.25
Local Network Profile—Table 1B	178	1	178	.5	89
Person-based Demographic and clinical Status Summary—Table 2	178	1	178	30.00	5,340
Service Utilization Summary—Table 3	178	1	178	20.00	3,560
Prevention, Outreach, and Education Activities—Table 4	178	1	178	4.00	712
Total	178	1	178	54.75	9,746

Written comments and recommendations concerning the proposed information collection should be sent within 30 days of this notice to: John Morrall, Human Resources and Housing Branch, Office of Management and Budget, New Executive Office Building, Room 10235, Washington, D.C. 20503.

Dated: October 13, 2000.

Jane M. Harrison,

Director, Division of Policy Review and Coordination.

[FR Doc. 00–26894 Filed 10–18–00; 8:45 am]

BILLING CODE 4160–15–U

DEPARTMENT OF HEALTH AND HUMAN SERVICES

Indian Health Service

Request for Public Comment: 30-Day Notice; Proposed Collection: IHS Urban Indian Health Program Common Reporting Requirements

SUMMARY: In compliance with Section 3507(a)(1)(D) of the Paperwork Reduction Act of 1996, for opportunity for public comment on proposed information collection projects, the Indian Health Service (IHS) has submitted to the Office of Management and Budget (OMB) a request to review and approve the collection of information listed below. This proposed collection of information was published in the **Federal Register** (63 FR 11688) on January 24, 2000 and allowed 60 days for public comment. No public comment was received in response to the notice. The purpose of this notice is to allow 30 days for public comment to be submitted to OMB.

PROPOSED COLLECTION:

Title: 09–17–0007, ''IHS Urban Indian Health Program Common Reporting Requirements.''

Type of Information Collection Request: Three year reinstatement, without change, of previously approved information collection, 0917–0007, ''IHS Urban Indian Health Program Common Reporting Requirements'' for which approval expired June 30, 2000.

Form Number: The report formats are contained in IHS instruction manual, ''Urban Indian Health Programs Common Reporting Requirements.'' The reporting formats have been computerized for electronic data submission.

Need and Use of Information Collection: IHS contracts with urban Indian organizations to: Access and identify health services available to urban Indians; provide health education and health services to urban Indians; identify the unmet health needs of urban Indians; and, make recommendations on methods to improve health services provided to urban Indians. The information is collected annually and used to: monitor contractor performance; prepare budget reports; allocate resources; and, access and evaluate the urban Indian health contract programs.

Affected Public: Individuals or households, not-for-profit institutions and State, Local or Tribal Government.

Type of Respondents: Urban Indian health care organizations. The table below provides: Types of data collection instruments, estimated number of respondents, number of responses per respondent, average burden hour per response, and total annual burden hour.

Data collection instrument	Estimated number of respondents	Responses per respondent	Annual number of responses	Average burden hour per response*	Total annual burden hours
Face Sheet	34	1	34	0.50 (30 min)	17.0
Table 1	34	1	34	1.50 (90 min)	51.0
Table 2	34	1	34	0.57 (34 min)	19.0
Table 3	34	1	34	1.69 (101 min)	57.0
Table 4	**23	1	23	0.38 (23 min)	9.0
Table 5	34	1	34	1.50 (90 min)	51.0
Table 6	34	1	34	1.50 (90 min)	51.0
Table 7	34	1	34	0.75 (45 min)	26.0

Data collection instrument	Estimated number of respondents	Responses per respondent	Annual number of responses	Average burden hour per response*	Total annual burden hours
Table 8	34	1	34	0.94 (56 min)	32.0
Total	261	1	261		313.0

For ease of understanding, burden hours are also provided in actual minutes.
**Excludes urban Indian health projects with no medical component.

There are no Capital Costs, Operating Costs and/or Maintenance Costs required for this collection of information.

REQUEST FOR COMMENTS: Your written comments and/or suggestions are invited on one or more of the following points: (a) Whether the information collection activity is necessary to carry out an agency function; (b) whether the IHS processes the information collected in a useful and timely fashion; (c) the accuracy of the public burden estimate (the estimated amount of time needed for individual respondents to provide the requested information); (d) whether the methodology and assumptions used to determine the estimates are logical; (e) ways to enhance the quality, utility, and clarity of the information being collected; and (f) ways to minimize the public burden through the use of automated, electronic, mechanical, or other technological collection techniques or other forms of information technology.

Direct Comments to OMB: Send your written comments and suggestions regarding the proposed information collection contained in this notice, especially regarding the estimated public burden and associated response time, to: Office of Management and Budget, Office of Regulatory Affairs, New Executive Office Building, Room 10235, Washington, DC 20503, Attention: Desk Officer for IHS.

To request more information on the proposed collection or to obtain a copy of the data collection instrument(s) and/or instructions(s), contact: Mr. Lance Hodahkwen, Sr., M.P.H., IHS Reports Clearance Officer, 12300 Twinbrook Parkway, Suite 450, Rockville, MD 20852.1601, or call non-toll free (301) 443–5938 or send via facsimile to (301) 443–2316, or send your E-mail requests, comments, and return address to: lhodahkw@hqe.ihs.gov.

Comments Due Date: Comments regarding this information collection are best assured of having their full effect if received on or before November 20, 2000.

Dated: October 13, 2000.

Michael H. Trujillo,

Assistance Surgeon General Director.

[FR Doc. 00–26896 Filed 10–18–00; 8:45 am]

BILLING CODE 4160–16–M

DEPARTMENT OF HEALTH AND HUMAN SERVICES

National Institutes of Health

National Cancer Institute; Notice of Closed Meeting

Pursuant to section 10(d) of the Federal Advisory Committee Act, as amended (5 U.S.C. appendix 2), notice is hereby given of the following meeting.

The meeting will be closed to the public in accordance with the provisions set forth in sections 552b(c)(4) and 552b(c)(6), Title 5 U.S.C., as amended. The grant applications and the discussions could disclose confidential trade secrets or commercial property such as patentable material, and personal information concerning individuals associated with the grant applications, the disclosure of which would constitute a clearly unwarranted invasion of personal privacy.

Name of Committee: National Cancer Institute Special Emphasis Panel, SPORES.

Date: October 25–27, 2000.

Time: 8 AM to 6 PM.

Agenda: To review and evaluate grant applications.

Place: Holiday Inn—Georgetown, 2101 Wisconsin Avenue, NW, Washington, DC 20007.

Contact Person: Brian E. Wojcik, PhD, Scientific Review Administrator, Grants Review Branch, Division of Extramural Activities, National Cancer Institute, 6116 Executive Boulevard, Room 8019, Bethesda, MD 20892, 301/402–2785.

This notice is being published less than 15 days prior to the meeting due to the timing limitations imposed by the review and funding cycle.

(Catalogue of Federal Domestic Assistance Program Nos. 93.392, Cancer Construction; 93.393, Cancer Cause and Prevention Research; 93.394, Cancer Detection and Diagnosis Research; 93.395, Cancer Treatment Research; 93.396, Cancer Biology Research; 93.397, Cancer Centers Support; 93.398, Cancer Research Manpower; 93.399, Cancer Control, National Institutes of Health, HHS)

Dated: October 12, 2000.

LaVerne Y. Stringfield,

Director, Office of Federal Advisory Committee Policy.

[FR Doc. 00–26854 Filed 10–18–00; 8:45 am]

BILLING CODE 4140–01–M

DEPARTMENT OF HEALTH AND HUMAN SERVICES

National Institutes of Health

National Cancer Institute; Notice of Closed Meeting

Pursuant to section 10(d) of the Federal Advisory Committee Act, as amended (5 U.S.C. Appendix 2), notice is hereby given of the following meeting.

The meeting will be closed to the public in accordance with the provisions set forth in sections 552b(c)(4) and 552b(c)(6), Title 5 U.S.C., as amended. The grant applications and the discussions could disclose confidential trade secrets or commercial property such as patentable material, and personal information concerning individuals associated with the grant applications, the disclosure of which would constitute a clearly unwarranted invasion of personal privacy.

Name of Committee: National Cancer Institute Special Emphasis Panel; Improving DNA, RNA, and Protein Availability in Fixed Tissue.

Date: November 15, 2000.

Time: 8 a.m. to 3 p.m.

Agenda: To review and evaluate grant applications.

Place: Ramada Inn Rockville, 1775 Rockville Pike, Rockville, MD 20852.

Contact Person: Gerald G. Lovinger, PhD, Scientific Review Administrator, Grants Review Branch, Division of Extramural Activities, National Cancer Institute, National Institutes of Health, 6116 Executive Boulevard, Room 8070, Rockville, MD 20892–7405, 301/496–7987.

(Catalogue of Federal Domestic Assistance Program Nos. 93.392, Cancer Construction; 93.393, Cancer Cause and Prevention Research; 93.394, Cancer Detection and Diagnosis Research; 93.395, Cancer Treatment Research; 93.396, Cancer Biology Research; 93.397, Cancer Centers Support;

93.398, Cancer Research Manpower; 93.399, Cancer Control, National Institutes of Health, HHS)

Dated: October 11, 2000.

LaVerne Y. Stringfield,

Director, Office of Federal Advisory Committee Policy.

[FR Doc. 00–26858 Filed 10–18–00; 8:45 am]

BILLING CODE 4140–01–M

DEPARTMENT OF HEALTH AND HUMAN SERVICES

National Institutes of Health

National Cancer Institute; Notice of Closed Meeting

Pursuant to section 10(d) of the Federal Advisory Committee Act, as amended (5 U.S.C. Appendix 2), notice is hereby given of the following meeting.

The meeting will be closed to the public in accordance with the provisions set forth in sections 552b(c)(4) and 552b(c)(6), Title 5 U.S.C., as amended. The grant applications and the discussions could disclose confidential trade secrets or commercial property such as patentable material, and personal information concerning individuals associated with the grant applications, the disclosure of which would constitute a clearly unwarranted invasion of personal privacy.

Name of Committee: National Cancer Institute Special Emphasis Panel Lung Image Data Base Resource for Imaging Research.

Date: November 9, 2000.

Time: 8:00 AM to 4:00 PM.

Agenda: To review and evaluate grant applications.

Place: Ramada Inn Rockville, 1775 Rockville Pike, Rockville, MD 20852.

Contact Person: Gerald G. Lovinger, PHD, Scientific Review Administrator, Grants Review Branch, Division of Extramural Activities, National Cancer Institute, National Institutes of Health, 6116 Executive Boulevard, Room 8070, Rockville, MD 20892–7405, 301/496–7987.

(Catalogue of Federal Domestic Assistance Program Nos. 93.392, Cancer Construction; 93.393, Cancer Cause and Prevention Research; 93.394, Cancer Detection and Diagnosis Research; 93.395, Cancer Treatment Research; 93.396, Cancer Biology Research; 93.397, Cancer Centers Support; 93.398, Cancer Research Manpower; 93.399, Cancer Control, National Institutes of Health, HHS)

Dated: October 11, 2000.

LaVerne Y. Stringfield,

Director, Office of Federal Advisory Committee Policy.

[FR Doc. 00–26859 Filed 10–18–00; 8:45 am]

BILLING CODE 4140–01–M

DEPARTMENT OF HEALTH AND HUMAN SERVICES

National Institutes of Health

National Cancer Institute; Notice of Closed Meeting

Pursuant to section 10(d) of the Federal Advisory Committee Act, as amended (5 U.S.C. Appendix 2), notice is hereby given of the following meeting.

The meeting will be closed to the public in accordance with the provisions set forth in sections 552b(c)(4) and 552b(c)(6), Title 5 U.S.C., as amended. The grant applications and the discussions could disclose confidential trade secrets or commercial property such as patentable material, and personal information concerning individuals associated with the grant applications, the disclosure of which would constitute a clearly unwarranted invasion of personal privacy.

Name of Committee: National Cancer Institute Special Emphasis Panel Innovative Technologies for the Molecular Analyses of Cancer and their Applications.

Date: November 8–10, 2000.

Time: 7:00 PM to 5:00 PM.

Agenda: To review and evaluate grant applications.

Place: Gaithersburg Hilton Hotel, 620 Perry Parkway, Gaithersburg, MD 20877.

Contact Person: Sherwood Githens, Scientific Review Administrator, National Institutes of Health, National Cancer Institute, Special Review, Referral and Resources Branch, 6116 Executive Boulevard, Room 8068, Bethesda, MD 20892, (301) 435–1822.

(Catalogue of Federal Domestic Assistance Program Nos. 93.392, Cancer Construction; 93.393, Cancer Cause and Prevention Research; 93.394, Cancer Detection and Diagnosis Research; 93.395, Cancer Treatment Research; 93.396, Cancer Biology Research; 93.397, Cancer Centers Support; 93.398, Cancer Research Manpower; 93.399, Cancer Control, National Institutes of Health, HHS)

Dated: October 11, 2000.

LaVerne Y. Stringfield,

Director, Office of Federal Advisory Committee Policy.

[FR Doc. 00–26860 Filed 10–18–00; 8:45 am]

BILLING CODE 4140–01–M

DEPARTMENT OF HEALTH AND HUMAN SERVICES

National Institutes of Health

National Cancer Institute; Notice of Closed Meeting

Pursuant to section 10(d) of the Federal Advisory Committee Act, as amended (5 U.S.C. Appendix 2), notice is hereby given of the following meeting.

The meeting will be closed to the public in accordance with the provisions set forth in sections 552b(c)(4) and 552b(c)(6), title 5 U.S.C., as amended. The grant applications and the discussions could disclose confidential trade secrets or commercial property such as patentable material, and personal information concerning individuals associated with the grant applications, the disclosure of which would constitute a clearly unwarranted invasion of personal privacy.

Name of Committee: National Cancer Institute Special Emphasis Panel, Cooperative Human Tissue Network.

Date: November 6, 2000.

Time: 8 a.m. to 6 p.m.

Agenda: To review and evaluate grant applications.

Place: National Cancer Institute, 6120 Executive Boulevard, Conference Room J, Rockville, MD 20852.

Contact Person: Lalita D. Palekar, Scientific Review Administrator, Special Review, Referral and Resources Branch, Division of Extramural Activities, National Cancer Institute, National Institutes of Health, 6116 Executive Boulevard, Room 8066, Bethesda, MD 20892–7405, (301) 496–7575.

(Catalogue of Federal Domestic Assistance Program Nos. 93.392, Cancer Construction; 93.393, Cancer Cause and Prevention Research; 93.394, Cancer Detection and Diagnosis Research; 93.395, Cancer Treatment Research; 93.396, Cancer Biology Research; 93.397, Cancer Centers Support; 93.398, Cancer Research Manpower; 93.399, Cancer Control, National Institutes of Health, HHS)

Dated: October 11, 2000.

LaVerne Y. Stringfield,

Director, Office of Federal Advisory Committee Policy.

[FR Doc. 00–26861 Filed 10–18–00; 8:45 am]

BILLING CODE 4140–01–M

DEPARTMENT OF HEALTH AND HUMAN SERVICES

National Institutes of Health

National Cancer Institute; Amended Notice of Meeting

Notice is hereby given of a change in the meeting of the National Cancer Institute Director's Consumer Liaison Group, October 17, 2000, 8 a.m. to October 18, 2000, 12:30 p.m., National Cancer Institute, 6116 Executive Boulevard, Suite 300 C, Rockville, MD 20852 which was published in the **Federal Register** on October 5, 2000, 65FR59452.

The meeting will be held at the Natcher Building (Building 45), Conference Room E1/E2, 45 Center

Drive, Bethesda, MD 20892. The meeting is open to the public.

Dated: October 11, 2000.

LaVerne Y. Stringfield,

Director, Office of Federal Advisory Committee Policy.

[FR Doc. 00–26862 Filed 10–18–00; 8:45 am]

BILLING CODE 4140–01–M

DEPARTMENT OF HEALTH AND HUMAN SERVICES

National Institutes of Health

National Cancer Institute; Amended Notice of Meeting

Notice is hereby given of a change in the meeting of the Advisory Committee to the Director, National Cancer Institute, November 6, 2000, 9:30 a.m. to November 6, 2000, 11 p.m., National Institutes of Health, 9000 Rockville Pike, Building 31, Room 11A10, Bethesda, MD 20892 which was published in the **Federal Register** on October 5, 2000, 65FR59453.

The meeting will be held from 9:30 a.m. to 11 a.m. The meeting is open to the public.

Dated: October 11, 2000.

LaVerne Y. Stringfield,

Director, Office of Federal Advisory Committee Policy.

[FR Doc. 00–26863 Filed 10–18–00; 8:45 am]

BILLING CODE 4140–01–M

DEPARTMENT OF HEALTH AND HUMAN SERVICES

National Institutes of Health

National Cancer Institute; Notice of Closed Meeting

Pursuant to section 10(d) of the Federal Advisory Committee Act, as amended (5 U.S.C. Appendix 2), notice is hereby given of the following meeting.

The meeting will be closed to the public in accordance with the provisions set forth in sections 552b(c)(4) and 552b(c)(6), title 5 U.S.C., as amended. The grant applications and the discussions could disclose confidential trade secrets or commercial property such as patentable material, and personal information concerning individuals associated with the grant applications, the disclosure of which would constitute a clearly unwarranted invasion of personal privacy.

Name of Committee: National Cancer Institute Special Emphasis Panel Planning Grants: In Vivo Cellular and Molecular Imaging Centers.

Date: November 13, 2000.

Time: 8:00 AM to 6:00 PM.

Agenda: To review and evaluate grant applications.

Place: Holiday Inn—Bethesda, 8120 Wisconsin Avenue, Bethesda, MD 20814.

Contact Person: Kenneth L. Bielat, Scientific Review Administrator, Division of Extramural Activities, National Cancer Institute, National Institutes of Health, 6116 Executive Boulevard, Room 8043, Bethesda, MD 20892, (301) 496–7576.

(Catalogue of Federal Domestic Assistance Program Nos. 93.392, Cancer Construction; 93.393, Cancer Cause and Prevention Research; 93.394, Cancer Detection and Diagnosis Research; 93.395, Cancer Treatment Research; 93.396, Cancer Biology Research; 93.397, Cancer Centers Support; 93.398, Cancer Research Manpower; 93.399, Cancer Control, National Institutes of Health, HHS)

Dated: October 11, 2000.

LaVerne Y. Stringfield,

Director, Office of Federal Advisory Committee Policy.

[FR Doc. 00–26864 Filed 10–18–00; 8:45 am]

BILLING CODE 4140–01–M

DEPARTMENT OF HEALTH AND HUMAN SERVICES

National Institutes of Health

National Cancer Institute; Notice of Closed Meeting

Pursuant to section 10(d) of the Federal Advisory Committee Act, as amended (5 U.S.C. Appendix 2), notice is hereby given of the following meeting.

The meeting will be closed to the public in accordance with the provisions set forth in sections 552b(c)(4) and 552b(c)(6), Title 5 U.S.C., as amended. The grant applications and the discussions could disclose confidential trade secrets or commercial property such as patentable material, and personal information concerning individuals associated with the grant applications, the disclosure of which would constitute a clearly unwarranted invasion of personal privacy.

Name of Committee: National Cancer Institute Special Emphasis Panel, Small Grants Program for Behavioral Research in Cancer Control.

Date: November 20, 2000.

Time: 8:00 am to 5:00 pm.

Agenda: To review and evaluate grant applications.

Place: Ramada Inn Rockville, 1775 Rockville Pike, Rockville, MD 20852.

Contact Person: Mary Jane Slesinski, Phd Scientific Review Administrator, Special Review and Resources Branch, Division of Extramural Activities, National Cancer Institute, National Institutes of Health, 6116 Executive Boulevard, Room 8045, Bethesda, MD 20892, 301/594–1566.

(Catalogue of Federal Domestic Assistance Program Nos. 93.392, Cancer Construction; 93.393, Cancer Cause and Prevention Research; 93.394, Cancer Detection and Diagnosis Research; 93.395, Cancer Treatment Research; 93.396, Cancer Biology Research; 93.397, Cancer Centers Support; 93.398, Cancer Research Manpower; 93.399, Cancer Control, National Institutes of Health, HHS)

Dated: October 11, 2000.

LaVerne Y. Stringfield,

Director, Office of Federal Advisory Committee Policy.

[FR Doc. 00–26868 Filed 10–18–00; 8:45 am]

BILLING CODE 4140–01–M

DEPARTMENT OF HEALTH AND HUMAN SERVICES

National Institutes of Health

National Cancer Institute; Notice of Closed Meeting

Pursuant to section 10(d) of the Federal Advisory Committee Act, as amended (5 U.S.C. Appendix 2), notice is hereby given of the following meeting.

The meeting will be closed to the public in accordance with the provisions set forth in sections 552b(c)(4) and 552b(c)(6), Title 5 U.S.C., as amended. The grant applications and the discussions could disclose confidential trade secrets or commercial property such as patentable material, and personal information concerning individuals associated with the grant applications, the disclosure of which would constitute a clearly unwarranted invasion of personal privacy.

Name of Committee: National Cancer Institute Initial Review Group Subcommittee F—Manpower & Training.

Date: November 15–17, 2000.

Time: 8:00 am to 12:00 pm.

Agenda: To review and evaluate grant applications.

Place: Georgetown Holiday Inn, 2101 Wisconsin Ave., NW., Washington, DC 20007.

Contact Person: Mary Bell, PhD, Scientific Review Administrator, Grants Review Branch, Division of Extramural Activities, National Cancer Institute, National Institutes of Health, PHS, DHHS, 6116 Executive Boulevard, Room 8113, Bethesda, MD 20892–8328, 301–496–7978.

(Catalogue of Federal Domestic Assistance Program Nos. 93.392, Cancer Construction; 93.393, Cancer Cause and Prevention Research; 93.394, Cancer Detection and Diagnosis Research; 93.395, Cancer Treatment Research; 93.396, Cancer Biology Research; 93.397, Cancer Centers Support; 93.398, Cancer Research Manpower; 93.399, Cancer Control, National Institutes of Health, HHS)

Dated: October 11, 2000.

LaVerne Y. Stringfield,

Director, Office of Federal Advisory Committee Policy.

[FR Doc. 00–26870 Filed 10–18–00; 8:45 am]

BILLING CODE 4140–01–M

DEPARTMENT OF HEALTH AND HUMAN SERVICES

National Institutes of Health

National Heart, Lung, and Blood Institute; Notice of Meeting

Pursuant to section 10(a) of the Federal Advisory Committee Act, as amended (5 U.S.C. Appendix 2), notice is hereby given of a meeting of the Sleep Disorders Research Advisory Board.

The meeting will be open to the public, with attendance limited to space available. Individuals who plan to attend and need special assistance, such as sign language interpretation or other reasonable accommodations, should notify the Contact Person listed below in advance of the meeting.

Name of Committee: Sleep Disorders Research Advisory Board.

Date: December 6, 2000.

Time: 8:30 am to 3:00 pm.

Agenda: To discuss sleep research and education priorities and programs.

Place: Natcher Building 45, Conference Room D, National Institutes of Health, Bethesda, MD 20892.

Contact Person: Michael J Twery, PhD, Acting Director, National Center on Sleep Disorders Research, NIH/National Heart, Lung, and Blood Institute, National Center on Sleep Disorders Research, Two Rockledge Center, Suite 10038, 6701 Rockledge Drive, Bethesda, MD 20892, 301/435–0199.

(Catalogue of Federal Domestic Assistance Program Nos. 93.233, National Center for Sleep Disorders Research; 93.837, Heart and Vascular Diseases Research; 93.838, Lung Diseases Research; 93.839, Blood Diseases and Resources Research, National Institutes of Health, HHS)

Dated: October 12, 2000.

LaVerne Y. Stringfield,

Director, Office of Federal Advisory Committee Policy.

[FR Doc. 00–26872 Filed 10–18–00; 8:45 am]

BILLING CODE 4140–01–M

DEPARTMENT OF HEALTH AND HUMAN SERVICES

National Institutes of Health

National Institute of Drug Abuse; Notice of Closed Meeting

Pursuant to section 10(d) of the Federal Advisory Committee Act, as amended (5 U.S.C. Appendix 2), notice is hereby given of the following meeting.

The meeting will be closed to the public in accordance with the provisions set forth in sections 552b(c)(4) and 552b(c)(6), Title 5 U.S.C., as amended. The grant applications and the discussions could disclose confidential trade secrets or commercial property such as patentable material, and personal information concerning individuals associated with the grant applications, the disclosure of which would constitute a clearly unwarranted invasion of personal privacy.

Name of Committee: National Institute on Drug Abuse Special Emphasis Panel; The Development of Behavioral Methods for Drug Abuse Studies in the Mouse.

Date: November 29, 2000.

Time: 9:00 am to 6:00 pm.

Agenda: To review and evaluate grant applications.

Place: Holiday Inn, 5520 Wisconsin Avenue, Chevy Chase, MD 20815.

Contact Person: Khursheed Asghar, PhD, Chief, Basic Sciences Review Branch, Office of Extramural Affairs, National Institute on Drug Abuse, National Institutes of Health, 6001 Executive Boulevard, Room 3158, Msc 9547, Bethesda, MD 29089–2954, (301) 443–2620.

(Catalogue of Federal Domestic Assistance Program Nos. 93.277, Drug Abuse Scientist Development Award for Clinicians, Scientist Development Awards, and Research Scientist Awards; 93.278, Drug Abuse National Research Service Awards for Research Training; 93.279, Drug Abuse Research Programs, National Institutes of Health, HHS)

Dated: October 12, 2000.

LaVerne Y. Stringfield,

Director, Office of Federal Advisory Committee Policy.

[FR Doc. 00–26855 Filed 10–18–00; 8:45 am]

BILLING CODE 4140–01–M

DEPARTMENT OF HEALTH AND HUMAN SERVICES

National Institutes of Health

National Institute on Aging; Notice of Closed Meetings

Pursuant to section 10(d) of the Federal Advisory Committee Act, as amended (5 U.S.C. Appendix 2), notice is hereby given of the following meetings.

The meetings will be closed to the public in accordance with the provisions set forth in sections 552b(c)(4) and 552b(c)(6), Title 5 U.S.C., as amended. The grant applications and the discussions could disclose confidential trade secrets or commercial property such as patentable material, and personal information concerning individuals associated with the grant applications, the disclosure of which would constitute a clearly unwarranted invasion of personal privacy.

Name of Committee: National Institute on Aging Special Emphasis Panel, TELECONFERNCE (FOCUS).

Date: October 26, 2000.

Time: 11:30 am to 2:00 pm.

Agenda: To review and evaluate grant applications.

Place: Gateway Building, 7201 Wisconsin Avenue, Bethesda, MD 20814 (Telephone Conference Call).

Contact Person: Ramesh Vemuri, PhD, Office of Scientific Review, National Institute on Aging, The Bethesda Gateway Building, 7201 Wisconsin Avenue, Suite 2C212, Bethesda, MD 20892, (301) 496–9666.

This notice is being published less than 15 days prior to the meeting due to the timing limitations imposed by the review and funding cycle.

Name of Committee: National Institute on Aging Special Emphasis Panel, Training Grants (T32) and one mentored research scientist dev. award (K01).

Date: November 3, 2000.

Time: 1:00 pm to 3:00 pm.

Agenda: To review and evaluate grant applications.

Place: Gateway Building, 7201 Wisconsin Avenue, Bethesda, MD 20814 (Telephone Conference Call).

Contact Person: Arthur D. Schaerdel, DVM, The Bethesda Gateway Building, 7201 Wisconsin Avenue, Suite 2C212, Bethesda, MD 20892, (301) 496–9666.

Name of Committee: National Institute on Aging Special Emphasis Panel.

Date: November 6–8, 2000.

Time: 6:30 pm to 4:00 pm.

Agenda: To review and evaluate grant applications.

Place: Chevy Chase Holiday Inn, Chevy Chase, MD 20815.

Contact Person: Arthur D. Schaerdel, DVM, The Bethesda Gateway Building, 7201 Wisconsin Avenue, Suite 2C212, Bethesda, MD 20892, (301) 496–9666.

Name of Committee: National Institute on Aging Special Emphasis Panel.

Date: November 27–28, 2000.

Time: 7:30 pm to 4:00 pm.

Agenda: To review and evaluate grant applications.

Place: The Hyatt Regency Hotel, 100 Bethesda Metro Center, Bethesda, MD 20814.

Contact Person: James P. Harwood, PhD, Deputy Chief, Scientific Review Office, The Bethesda Gateway Building, 7201 Wisconsin Avenue, Suite 2C212, Bethesda, MD 20892, (301) 496–9666.

Name of Committee: National Institute on Aging Special Emphasis Panel, Genetic and Epigenetic Studies of Aging.

Date: December 5–6, 2000.

Time: 7:00 pm to 4:00 pm.

Agenda: To review and evaluate grant applications.

Place: Crown Plaza Houston Medical Center 6701 South Main Street, Houston, TX 77030.

Contact Person: James P. Harwood, PhD, Deputy Chief, Scienticif Review Office, The Bethesda Gateway Building, 7201 Wisconsin

Avenue, Suite 2C212, Bethesda, MD 20892, (301) 496–9666.

Name of Committee: National Institute on Aging Special Emphasis Panel, Review a grant application on the immunobiology of aging.

Date: December 6, 2000.

Time: 8:00 am to 4:00 pm.

Agenda: To review and evaluate grant applications.

Place: Bethesda Holiday Inn, 8120 Wisconsin Avenue, Bethesda, MD 20852.

Contact Person: Arthur D. Schaerdel, DVM, Scientific Review Administrator, The Bethesda Gateway Building, 7201 Wisconsin Avenue, Suite 2C212, Bethesda, MD 20892, (301) 496–9666.

Name of Committee: National Institute on Aging Special Emphasis Panel; Causes and Reversal of Age-Induced Thymic Involution.

Date: December 12–13, 2000.

Time: 7:00 pm to 4:00 pm.

Agenda: To review and evaluate grant applications.

Place: Double Tree Hotel Los Angeles Westwood, 10740 Wilshire Boulevard, Los Angeles, California, CA 90024.

Contact Person: James P. Harwood, PhD, Deputy Chief, Scientific Review Office, The Bethesda Gateway Building, 7201 Wisconsin Avenue, Suite 2C212, Bethesda, MD 20892, (301) 496–9666.

Name of Committee: National Institute on Aging Special Emphasis Panel; To review the ADCC grant applications.

Date: January 9–11, 2001.

Time: 8:00 am to 5:00 pm.

Agenda: To review and evaluate grant applications.

Place: Chevy Chase Holiday Inn, 5520 Wisconsin Ave., Chevy Chase, MD 20815.

Contact Person: Jeffrey M. Chernak, PhD, The Bethesda Gateway Building, 7201 Wisconsin Avenue, Suite 2C212, Bethesda, MD 20892, (301) 496–9666.

(Catalogue of Federal Domestic Assistance Program Nos. 93.866, Aging Research, National Institutes of Health, HHS)

Dated: October 12, 2000.

LaVerne Y. Stringfield,

Director, Office of Federal Advisory Committee Policy.

[FR Doc. 00–26856 Filed 10–18–00; 8:45 am]

BILLING CODE 4140–01–M

DEPARTMENT OF HEALTH AND HUMAN SERVICES

National Institutes of Health

National Institute of Allergy and Infectious Diseases; Notice of Closed Meeting

Pursuant to section 10(d) of the Federal Advisory Committee Act, as amended (5 U.S.C. Appendix 2), notice is hereby given of the following meeting.

The meeting will be closed to the public in accordance with the provisions set forth in sections 552(c)(4) and 552b(c)(6), Title 5 U.S.C., as amended. The grant applications and the discussions could disclose confidential trade secrets or commercial property such as patentable material, and personal information concerning individuals associated with the grant applications, the disclosure of which would constitute a clearly unwarranted invasion of personal privacy.

Name of Committee: Acquired Immunodeficiency Syndrome Research Review Committee.

Date: November 16, 2000.

Time: 8:30 am to 5:00 pm.

Agenda: To review and evaluate grant applications.

Place: Georgetown Holiday Inn, 2101 Wisconsin Ave, N.W., Washington, DC 20007.

Contact Person: Paula S. Strickland, PhD, Scientific Review Administrator, Scientific Review Program, Division of Extramural Activities, NIAID, NIH, Room 2156, 6700–B Rockledge Drive, MSC 7610, Bethesda, MD 20892–7610, 301–496–2550.

(Catalogue of Federal Domestic Assistance Program Nos. 93.855, Allergy, Immunology, and Transplantation Research; 93.856, Microbiology and Infectious Diseases Research, National Institutes of Health, HHS)

Dated: October 12, 2000.

LaVerne Y. Stringfield,

Director, Office of Federal Advisory Committee Policy.

[FR Doc. 00–26857 Filed 10–18–00; 8:45 am]

BILLING CODE 4140–01–M

DEPARTMENT OF HEALTH AND HUMAN SERVICES

National Institutes of Health

National Institute of Environmental Health Sciences; Notice of Closed Meetings

Pursuant to section 10(d) of the Federal Advisory Committee Act, as amended (5 U.S.C. Appendix 2), notice is hereby given of the following meetings.

The meetings will be closed to the public in accordance with the provisions set forth in sections 552b(c)(4) and 522b(c)(6), Title 5 U.S.C., as amended. The grant applications and/or contract proposals and the discussions could disclose confidential trade secrets or commercial property such as patentable material, and personal information concerning individuals associated with the grant applications and/or contract proposals, the disclosure of which would constitute a clearly unwarranted invasion of personal privacy.

Name of Committee: National Institute of Environmental Health Sciences Special Emphasis Panel Evaluation of the toxic and carcinogenic potential of chemical agents in dietary supplement and/or herbal medicine.

Date: November 13, 2000.

Time: 9:00 am to 2:00 pm.

Agenda: To review and evaluate contract proposals.

Place: NIEHS, South Campus, Building 101, Conference Room C, Research Triangle Park, NC 27709.

Contact Person: Linda K. Bass, PhD, Nat'l Institute of Environmental Health Sciences, P.O. Box 12233, MD EC–30, Research Triangle Park, NC 27709, (919) 541–1307.

Name of Committee: National Institute of Environmental Health Sciences Special Emphasis Panel K08—Mentored Clinical Scientist Development Awards.

Date: November 16, 2000.

Time: 1:00 pm to 2:30 pm.

Agenda: To review and evaluate grant applications.

Place: NIEHS, 79 T. W. Alexander Drive, Building 4401, Conference Room 3446, Research Triangle Park, NC 27709, (Telephone Conference Call).

Contact Person: Linda K. Bass, PhD, Scientific Review Administrator, NIEHS, P.O. Box 12233 EC–30, Research Triangle Park, NC 27709, (919) 541–1307.

Name of Committee: National Institute of Environmental Health Sciences Special Emphasis Panel Localization of genes for non-insulin dependent diabetes mellitus.

Date: November 29, 2000.

*Time:*1:00 pm. to 3:00 pm.

Agenda: To review and evaluate contract proposals.

Place: NIEHS, 79 T. W. Alexander Drive, Building 4401, Conference Room 3446, Research Triangle Park, NC 27709, (Telephone Conference Call).

Contact Person: Linda K. Bass, PhD, Nat'l Institute of Environmental Health Sciences, P.O. Box 12233, MD EC–30, Research Triangle Park, NC 27709, (919) 541–1307.

(Catalogue of Federal Domestic Assistance Program Nos. 93.113, Biological Response to Environmental Health Hazards; 93.114, Applied Toxicological Research and Testing; 93.115, Biometry and Risk Estimation—Health Risks from Environmental Exposures; 93.142, NIEHS Hazardous Waste Worker Health and Safety Training; 93.143, NIEHS Superfund Hazardous Substances—Basic Research and Education; 93.894, Resources and Manpower Development in the Environmental Health Sciences, National Institutes of Health, HHS)

Dated: October 11, 2000.

LaVerne Y. Stringfield,

Director, Office of Federal Advisory Committee Policy.

[FR Doc. 00–26865 Filed 10–18–00; 8:45 am]

BILLING CODE 4140–01–M

DEPARTMENT OF HEALTH AND HUMAN SERVICES

National Institutes of Health

National Institute of Child Health and Human Development; Notice of Closed Meeting

Pursuant to section 10(d) of the Federal Advisory Committee Act, as amended (5 U.S.C. Appendix 2), notice is hereby given of the following meeting.

The meeting will be closed to the public in accordance with the provisions set forth in sections 552b(c)(4) and 552b(c)(6), Title 5 U.S.C., as amended. The contract proposals and the discussions could disclose confidential trade secrets or commercial property such as patentable material, and personal information concerning individuals associated with the contract proposals, the disclosure of which would constitute a clearly unwarranted invasion of personal privacy.

Name of Committee: National Institute of Child Health and Human Development Special Emphasis Panel.

Date: October 27, 2000.

Time: 1:00 pm to 2:30 pm.

Agenda: To review and evaluate proposals.

Place: 6100 Executive Blvd., 5th Floor, Rockville, MD 20852, (Telephone Conference Call).

Contact Person: Hameed Khan, PHD, Scientific Review Administrator, Division of Scientific Review, National Institute of Child Health, and Human Development, National Institutes of Health, 6100 Executive Blvd., Room 5E01, Bethesda, MD 20892, (301) 496–1485.

This notice is being published less than 15 days prior to the meeting due to the timing limitations imposed by the review and funding cycle.

(Catalogue of Federal Domestic Assistance Program Nos. 93.209, Contraception and Infertility Loan Repayment Program; 93.864, Population Research; 93.865, Research for Mothers and Children; 93.929, Center for Medical Rehabilitation Research, National Institutes of Health, HHS)

Dated: October 12, 2000.

LaVerne Y. Stringfield,

Director, Office of Federal Advisory Committee Policy.

[FR Doc. 00–26867 Filed 10–18–00; 8:45 am]

BILLING CODE 4140–01–M

DEPARTMENT OF HEALTH AND HUMAN SERVICES

National Institutes of Health

National Institute of Diabetes and Digestive and Kidney Diseases; Notice of Closed Meeting

Pursuant to section 10(d) of the Federal Advisory Committee Act, as amended (5 U.S.C. Appendix 2), notice is hereby given of a meeting of the Board of Scientific Counselors, NIDDK.

The meeting will be closed to the public as indicated below in accordance with the provisions set forth in section 552b(c)(6), Title 5 U.S.C., as amended for the review, discussion, and evaluation of individual intramural programs and projects conducted by the National Institute of Diabetes and Digestive and Kidney Diseases, including consideration of personnel qualifications and performance, and the competence of individual investigators, the disclosure of which would constitute a clearly unwarranted invasion of personal privacy.

Name of Committee: Board of Scientific Counselors, NIDDK.

Date: November 29–December 1, 2000.

Time: 6:00 pm to 12:00 pm.

Agenda: To review and evaluate personal qualifications and performance, and competence of individual investigators.

Place: National Institutes of Health, Building 5, Room 127, Bethesda, MD 20892.

Contact Person: Ira W. Levin, PhD, Acting Director, Division of Intramural Research, National Institute of Diabetes and Digestive, and Kidney Diseases, NIH, 9000 Rockville Pike, Bethesda, MD 20892.

(Catalogue of Federal Domestic Assistance Program Nos. 93.847, Diabetes, Endocrinology and Metabolic Research; 93.848, Digestive Diseases and Nutrition Research; 93.849, Kidney Diseases, Urology and Hematology Research, National Institutes of Health, HHS)

Dated: October 11, 2000.

LaVerne Y. Stringfield,

Director, Office of Federal Advisory Committee Policy.

[FR Doc. 00–26871 Filed 10–18–00; 8:45 am]

BILLING CODE 4140–01–M

DEPARTMENT OF HEALTH AND HUMAN SERVICES

National Institutes of Health

Center for Scientific Review; Notice of Closed Meetings

Pursuant to section 10(d) of the Federal Advisory Committee Act, as amended (5 U.S.C. Appendix 2), notice is hereby given of the following meetings.

The meetings will be closed to the public in accordance with the provisions set forth in sections 552b(c)(4) and 552b(c)(6), Title 5 U.S.C., as amended. The grant applications and the discussions could disclose confidential trade secrets or commercial property such as patentable material, and personal information concerning individuals associated with the grant applications, the disclosure of which would constitute a clearly unwarranted invasion of personal privacy.

Name of Committee: Center for Scientific Review Special Emphasis Panel.

Date: October 25, 2000.

Time: 2:00 pm to 3:30 pm.

Agenda: To review and evaluate grant applications.

Place: NIH, Rockledge 2, Bethesda, MD 20892, (Telephone Conference Call).

Contact Person: Gopal C. Sharma, DVM, MS, PhD, Diplomate American Board of Toxicology, Scientific Review Administrator, Center for Scientific Review, National Institutes of Health, 6701 Rockledge Drive, Room 2184, MSC 7818, Bethesda, MD 20892, (301) 435–1783, sharmag@csr.nih.gov.

This notice is being published less than 15 days prior to the meeting due to the timing limitations imposed by the review and funding cycle.

Name of Committee: Center for Scientific Review Special Emphasis Panel.

Date: October 26, 2000.

Time: 8:30 am to 5:00 pm.

Agenda: To review and evaluate grant applications.

Place: Holiday Inn, 10000 Baltimore Avenue, College Park, MD 20740.

Contact Person: Eugene Vigil, PhD, Scientific Review Administrator, Center for Scientific Review, National Institutes of Health, 6701 Rockledge Drive, Room 5144, MSC 7840, Bethesda, MD 20892, (301) 435–1025.

This notice is being published less than 15 days prior to the meeting due to the timing limitations imposed by the review and funding cycle.

Name of Committee: Social Sciences, Nursing, Epidemiology and Methods Integrated Review Group, Social Sciences, Nursing, Epidemiology and Methods 3.

Date: October 26–27, 2000.

Time: 9:00 am to 5:30 pm.

Agenda: To review and evaluate grant applications.

Place: Holiday Inn, Select, 480 King Street, Old Town Alexandria, VA 22314.

Contact Person: Robert Weller, PhD, Scientific Review Administrator, Center for Scientific Review, National Institutes of Health, 6701 Rockledge Drive, Room 3160, MSC 7770, Bethesda, MD 20892, (301) 435–0694.

This notice is being published less than 15 days prior to the meeting due to the timing limitations imposed by the review and funding cycle.

Name of Committee: Center for Scientific Review Special Emphasis Panel.

Date: October 27, 2000.

Time: 8:30 am to 1:00 pm.

Agenda: To review and evaluate grant applications.

Place: Bethesda Ramada Inn, 8400 Wisconsin Ave, Bethesda, MD 20814.

Contact Person: Chhanda L. Ganguly, PhD, Scientific Review Administrator, Center for Scientific Review, National Institutes of Health, 6701 Rockledge Drive, Room 5156, MSC 7842, Bethesda, MD 20892, (301) 435–1739.

This notice is being published less than 15 days prior to the meeting due to the timing limitations imposed by the review and funding cycle.

Name of Committee: Center for Scientific Review Special Emphasis Panel.

Date: October 27, 2000.

Time: 8:30 am to 12:00 pm.

Agenda: To review and evaluate grant applications.

Place: Holiday Inn, 10000 Baltimore Avenue, College Park, MD 20740.

Contact Person: Eugene Vigil, PhD, Scientific Review Administrator, Center for Scientific Review, National Institutes of Health, 6701 Rockledge Drive, Room 5144, MSC 7840, Bethesda, MD 20892, (301) 435–1025.

This notice is being published less than 15 days prior to the meeting due to the timing limitations imposed by the review and funding cycle.

Name of Committee: Center for Scientific Review Special Emphasis Panel.

Date: October 27, 2000.

Time: 9:00 am to 2:00 pm.

Agenda: To review and evaluate grant applications.

Place: Courtyard by Marriott, 2500 Research Blvd, Rockville, MD 20850.

Contact Person: Gopa Rakhit, PhD, Scientific Review Administrator, Center for Scientific Review, National Institutes of Health, 6701 Rockledge Drive, Room 4154, MSC 7806, Bethesda, MD 20892, (301) 435–1721.

This notice is being published less than 15 days prior to the meeting due to the timing limitations imposed by the review and funding cycle.

Name of Committee: Center for Scientific Review Special Emphasis Panel.

Date: October 27, 2000.

Time: 10:00 am to 11:00 am.

Agenda: To review and evaluate grant applications.

Place: Holiday Inn Chevy Chase, 5520 Wisconsin Avenue, Chevy Chase, MD 20815.

Contact Person: Anita Miller Sostek, PhD, Scientific Review Administrator, Center for Scientific Review, National Institutes of Health, 6701 Rockledge Drive, Room 3176, MSC 7848, Bethesda, MD 20892, (301) 435–1260.

This notice is being published less than 15 days prior to the meeting due to the timing limitations imposed by the review and funding cycle.

Name of Committee: Center for Scientific Review Special Emphasis Panel.

Date: October 27, 2000.

Time: 11:00 am to 1:00 pm.

Agenda: To review and evaluate grant applications.

Place: NIH, Rockledge 2, Bethesda, MD 20892, (Telephone Conference Call).

Contact Person: John Bishop, PhD, Scientific Review Administrator, Center for Scientific Review, National Institutes of Health, 6701 Rockledge Drive, Room 5180, MSC 7844, Bethesda, MD 20892, (301) 435–1250.

This notice is being published less than 15 days prior to the meeting due to the timing limitations imposed by the review and funding cycle.

Name of Committee: Center for Scientific Review Special Emphasis Panel.

Date: October 27, 2000.

Time: 1:00 pm to 2:00 pm.

Agenda: To review and evaluate grant applications.

Place: NIH, Rockledge 2, Bethesda, MD 20892, (Telephone Conference Call).

Contact Person: John Bishop, PhD, Scientific Review Administrator, Center for Scientific Review, National Institutes of Health, 6701 Rockledge Drive, Room 5180, MSC 7844, Bethesda, MD 20892, (301) 435–1250.

This notice is being published less than 15 days prior to the meeting due to the timing limitations imposed by the review and funding cycle.

Name of Committee: Center for Scientific Review Special Emphasis Panel.

Date: October 27, 2000.

Time: 2:00 pm to 6:00 pm.

Agenda: To review and evaluate grant applications.

Place: Bethesda Ramada Inn, 8400 Wisconsin Ave, Bethesda, MD 20814.

Contact Person: Chhanda L. Ganguly, PhD, Scientific Review Administrator, Center for Scientific Review, National Institutes of Health, 6701 Rockledge Drive, Room 5156, MSC 7842, Bethesda, MD 20892, (301) 435–1739.

This notice is being published less than 15 days prior to the meeting due to the timing limitations imposed by the review and funding cycle.

Name of Committee: Pathophysiological Sciences Integrated Review Group, General Medicine A Subcommittee 2.

Date: October 30–31, 2000.

Time: 8:30 am to 6:00 pm.

Agenda: To review and evaluate grant applications.

Place: The Washington Monarch Hotel, 2401 M Street NW, Washington, DC 20037.

Contact Person: Mushtaq A. Khan, DVM, PhD, Scientific Review Administrator, Center for Scientific Review, National Institutes of Health, 6701 Rockledge Drive, Room 2176, MSC 7818, Bethesda, MD 20892, (301) 435–1778, khanm@csr.nih.gov.

This notice is being published less than 15 days prior to the meeting due to the timing limitations imposed by the review and funding cycle.

Name of Committee: Center for Scientific Review Special Emphasis Panel.

Date: October 30–31, 2000.

Time: 8:30 am to 3:00 pm.

Agenda: To review and evaluate grant applications.

Place: Bethesda Marriott, 5151 Pooks Hill Rd., Bethesda, MD 20814.

Contact Person: Catharine L. Wingate, PhD, Scientific Review Administrator, Center for Scientific Review, National Institutes of Health, 6701 Rockledge Drive, Room 4136, MSC7804, Bethesda, MD 20892.

This notice is being published less than 15 days prior to the meeting due to the timing limitations imposed by the review and funding cycle.

Name of Committee: Oncological Sciences Integrated Review Group, Radiation Study Section.

Date: October 30–November 1, 2000.

Time: 8:30 am to 5:00 pm.

Agenda: To review and evaluate grant applications.

Place: The Westin Fairfax Hotel, 2100 Massachusetts Ave., NW, Washington, DC 20008.

Contact Person: Paul K. Strudler, PhD, Scientific Review Administrator, Center for Scientific Review, National Institutes of Health, 6701 Rockledge Drive, Room 4100, MSC 7804, Bethesda, MD 20892, (301) 435–1716.

This notice is being published less than 15 days prior to the meeting due to the timing limitations imposed by the review and funding cycle.

Name of Committee: Center for Scientific Review Special Emphasis Panel.

Date: October 30, 2000.

Time: 8:30 am to 6:00 pm.

Agenda: To review and evaluate grant applications.

Place: Holiday Inn Chevy Chase, 5520 Wisconsin Avenue, Chevy Chase, MD 20815.

Contact Person: Luigi Giacometti, PhD, Scientific Review Administrator, Center for Scientific Review, National Institutes of Health, 6701 Rockledge Drive, Room 5208, MSC 7850, Bethesda, MD 20892, (301) 435–1246.

This notice is being published less than 15 days prior to the meeting due to the timing limitations imposed by the review and funding cycle.

Name of Committee: Pathophysiological Sciences Integrated Review Group, Respiratory and Applied Physiology Study Section.

Date: October 30–31, 2000.

Time: 8:30 am to 2:00 pm.

Agenda: To review and evaluate grant applications.

Place: One Washington Circle Hotel, Conference Center, One Washington Circle, Washington, DC 20037.

Contact Person: Everett E. Sinnett, PhD, Scientific Review Administrator, Center for Scientific Review, National Institutes of Health, 6701 Rockledge Drive, Room 2178, MSC 7818, Bethesda, MD 20892, (301) 435–1016, sinnett@nih.gov.

This notice is being published less than 15 days prior to the meeting due to the timing limitations imposed by the review and funding cycle.

Name of Committee: Center for Scientific Review Special Emphasis Panel.

Date: October 30, 2000.

Time: 2:00 pm to 4:00 pm.

Agenda: To review and evaluate grant applications.

Place: NIH, Rockledge 2, Bethesda, MD 20892, (Telephone Conference Call).

Contact Person: Lee Rosen, PhD, Scientific Review Administrator, Center for Scientific

Review, National Institutes of Health, 6701 Rockledge Drive, Room 5116, MSC 7854, Bethesda, MD 20892, (301) 435–1171.

This notice is being published less than 15 days prior to the meeting due to the timing limitations imposed by the review and funding cycle.

Name of Committee: Center for Scientific Review Special Emphasis Panel.

Date: October 30–31, 2000.

Time: 5:00 pm to 5:00 pm.

Agenda: To review and evaluate grant applications.

Place: Holiday Inn Chevy Chase, 5520 Wisconsin Avenue, Chevy Chase, MD 20815.

Contact Person: Nancy Shinowara, PhD, Scientific Review Administrator, Center for Scientific Review, National Institutes of Health, 6701 Rockledge Drive, Room 4208, MSC 7814, Bethesda, MD 20892–7814, (301) 435–1173, shinowan@drg.nih.gov.

This notice is being published less than 15 days prior to the meeting due to the timing limitations imposed by the review and funding cycle.

Name of Committee: Center for Scientific Review Special Emphasis Panel.

Date: October 31, 2000.

Time: 8:00 am to 8:15 am.

Agenda: To review and evaluate grant applications.

Place: One Washington Circle Hotel, Conference Center, One Washington Circle, Washington, DC 20037.

Contact Person: Everett E. Sinnett, PhD, Scientific Review Administrator, Center for Scientific Review, National Institutes of Health, 6701 Rockledge Drive, Room 2178, MSC 7818, Bethesda, MD 20892, (301) 435–1016, sinnett@nih.gov.

This notice is being published less than 15 days prior to the meeting due to the timing limitations imposed by the review and funding cycle.

Name of Committee: Center for Scientific Review Special Emphasis Panel.

Date: October 31, 2000.

Time: 8:30 am to 5:00 pm.

Agenda: To review and evaluate grant applications and/or proposals.

Place: Holiday Inn, 5520 Wisconsin Ave, Chevy Chase, MD 20815.

Contact Person: Betty Hayden, PhD, Scientific Review Administrator, Center for Scientific Review, National Institutes of Health, 6701 Rockledge Drive, Room 4206, MSC 7812, Bethesda, MD 20892, (301) 435–1223, haydenb@csr.nih.gov.

This notice is being published less than 15 days prior to the meeting due to the timing limitations imposed by the review and funding cycle.

(Catalogue of Federal Domestic Assistance Program Nos. 93.306, Comparative Medicine, 93.306; 93.333, Clinical Research, 93.333, 93.337, 93.393–93.396, 93.837–93.844, 93.846–93.878, 93.892, 93.893, National Institutes of Health, HHS)

Dated: October 12, 2000.

LaVerne Y. Stringfield,

Director, Office of Federal Advisory Committee Policy.

[FR Doc. 00–26873 Filed 10–18–00; 8:45 am]

BILLING CODE 4140–01–M

DEPARTMENT OF HEALTH AND HUMAN SERVICES

National Institutes of Health

Clinical Center; Notice of Meeting

Pursuant to section 10(a) of the Federal Advisory Committee Act, as amended (5 U.S.C. Appendix 2), notice is hereby given of a meeting of the Board of Governors of the Warren Grant Magnuson Clinical Center.

The meeting will be open to the public, with attendance limited to space available. Individuals who plan to attend and need special assistance, such as sign language interpretation or other reasonable accommodations, should notify the Contact Person listed below in advance of the meeting.

Name of Committee: Board of Governors of the Warren Grant Magnuson Clinical Center Executive Committee.

Date: November 17, 2000.

Time: 10 a.m. to 12 p.m.

Agenda: National Institutes of Health, Clinical Center Medical Board Room, 2C115, 9000 Rockville Pike, Bethesda, MD 20892.

Contact Person: Maureen E. Gormley, Executive Secretary, Warren Grant Magnuson Clinical Center, National Institutes of Health, Building 10, Room 2C146, Bethesda, MD 20892, 301/496–2897.

Dated: October 12, 2000.

LaVerne Y. Stringfield,

Director, Office of Federal Advisory Committee Policy.

[FR Doc. 00–26866 Filed 10–18–00; 8:45 am]

BILLING CODE 4140–01–M

DEPARTMENT OF HOUSING AND URBAN DEVELOPMENT

[Docket No. FR–4562–N–07]

Notice of Proposed Information Collection for Public Comment: Early Doctoral Studies Grant Program

AGENCY: Office of the Assistant Secretary for Policy Development and Research, HUD.

ACTION: Notice.

SUMMARY: The proposed information collection requirement described below will be submitted to the Office of Management and Budget (OMB) for review, as required by the Paperwork Reduction Act. The Department is soliciting public comments on the subject proposal.

DATES: *Comments Due Date:* December 18, 2000.

ADDRESSES: Interested persons are invited to submit comments regarding this proposal. Comments should refer to the proposal by name or OMB control number and be sent to: Reports Liaison Officer, Office of Policy Development and Research, Department of Housing and Urban Development, 451 7th Street, SW., Room 8226, Washington, DC 20410.

FOR FURTHER INFORMATION CONTACT: Jane Karadbil, Office of University Partnerships, Department of Housing and Urban Development, 451 7th Street, Washington, DC 20410; telephone (202) 708–1537 (this is not a toll-free number). Copies of the proposed forms and other available documents to be submitted to OMB may be obtained from Ms. Karadbil.

SUPPLEMENTARY INFORMATION: The Department will submit the proposed information collection to OMB for review, as required by the Paperwork Reduction Action of 1995 (44 U.S.C. Chapter 35, as amended).

This Notice is soliciting comments from members of the public and affected entities concerning the proposed information collection to: (1) Evaluate whether the proposed collection of information is necessary for the proper performance of the functions of the agency, including whether the information will have practical utility; (2) evaluate the accuracy of the agency's estimate of the burden of the proposed collection of information; (3) enhance the quality, utility, and clarity of information to be collected; and (4) minimize the burden of collection of information on those who are to respond; including through the use of appropriate technology, e.g., permitting electronic submission of responses.

Title of the proposal: Early Doctoral Student Grant Program (EDS).

Description of the need for the information and proposed use: The information is being collected to enable HUD to select grantee in this competitive grant program. The information is also being used to monitor the performance of grantees to ensure that they meet statutory and program goals and requirements.

Members of the affected public: Ph.D. students early in their doctoral studies preparing research papers on HUD-related topics: 80 applicants and 15 grantees.

Estimation of the total number of hours needed to prepare the information collection including the number of respondents, frequency of response, and hours of response: Information pursuant to submitting applications will be submitted once. Information pursuant to grantee monitoring requirements will be annually and at the completion of the grant.

The following chart details the respondent burden on an annual basis:

	Number of respondents	Total annual responses	Hours per response	Total hours
Application	80	80	32	2,560
Semi-annual Reports	15	15	4	60
Final Reports	15	15	2	30
Recordkeeping	15	15	4	60
				2,710

Status of proposed information collection: This is a new paperwork request pending OMB approval.

Authority: Section 3506 of the Paperwork Reduction Act of 1995, 44 U.S.C. Chapter 35, as amended.

Dated: October 10, 2000.

Lawrence L. Thompson,

General Deputy Assistant Secretary for Policy Development and Research.

[FR Doc. 00–26842 Filed 10–18–00; 8:45 am]

BILLING CODE 4210–62–M

DEPARTMENT OF HOUSING AND URBAN DEVELOPMENT

[Docket No. FR 4563–N–18]

Office of the Assistant Secretary for Public and Indian Housing; Notice of Proposed Information Collection for Public Comment; Requirements for Designating Housing Projects

AGENCY: Office of the Assistant Secretary for Public and Indian Housing, HUD

ACTION: Notice.

SUMMARY: The proposed information collection requirement described below will be submitted to the Office of Management and Budget (OMB) for review, as required by the Paperwork Reduction Act. The Department is soliciting public comments on the subject proposal.

DATES: Comments due December 18, 2000.

ADDRESSES: Interested persons are invited to submit comments regarding this proposal. Comments should refer to the proposal by name and/or OMB Control number and should be sent to: Mildred M. Hamman, Reports Liaison Officers, Public and Indian Housing, Department of Housing and Urban Development, 451 7th Street, SW., Room 4238, Washington, DC 20410–5000.

FOR FURTHER INFORMATION CONTACT: Mildred M. Hamman, (202) 708–3642, extension 4128, for copies of the proposed form and other available documents. (This is not a toll-free number).

SUPPLEMENTARY INFORMATION: The Department will submit the proposed information collection to OMB for review, as required by the Paperwork Reduction Act of 1995 (44 U.S.C. Chapter 35, as amended).

This Notice is soliciting comments from members of the public and affected agencies concerning the proposed collection of information to: (1) Evaluate whether the proposed collection of information is necessary for the proper performance of the functions of the agency, including whether the information will have practical utility; (2) evaluate the accuracy of the agency's estimate of the burden of the proposed collection of information; (3) enhance the quality, utility, and clarity of the information to be collected; and (4) minimize the burden of the collection of information on those who are to respond, including through the use of appropriate automated collection techniques or other forms of information technology; e.g., permitting electronic submission of responses.

This Notice also lists the following information:

Title of proposal: Requirements for Designating Housing Projects.

OMB control number: 2577–0192.

Description of the need for the information and proposed use: The information collection burden associated with designated housing is required by statute. Section 10 of the Housing Opportunity and Extension Act of 1996 modified Section 7 of the U.S. Housing Act of 1937 to require Public Housing Agencies (PHAs) to submit to HUD a plan for designation before they designate projects for elderly families, only disabled families only, or elderly and disabled families. In this plan, PHAs must document why the designation is needed and what additional housing resources will be available to the non-designated group.

Agency form number: None.

Members of affected public: State or Local government.

Estimation of the total number of hours needed to prepare the information collection including number of respondents: 176 respondents; one response per respondent annually; 21 hours average per response, 3,358 total reporting burden hours per year.

Status of the Proposed information collection: Reinstatement, without change.

Authority: Section 3506 of the Paperwork Reduction Act of 1995, 44 U.S.C. Chapter 35, as amended.

Dated: October 12, 2000.

Harold Lucas,

Assistant Secretary for Public and Indian Housing.

[FR Doc. 00–26843 Filed 10–18–00; 8:45 am]

BILLING CODE 4210–33–M

DEPARTMENT OF HOUSING AND URBAN DEVELOPMENT

[Docket No. FR–4561–N–64]

Notice of Submission of Proposed Information Collection to OMB; General Conditions of the Contract for Construction—Public Housing Programs

AGENCY: Office of the Chief Information Officer, HUD.

ACTION: Notice.

SUMMARY: The proposed information collection requirement described below has been submitted to the Office of Management and Budget (OMB) for review, as required by the Paperwork Reduction Act. The Department is soliciting public comments on the subject proposal.

DATES: *Comments Due Date:* November 20, 2000.

ADDRESSES: Interested persons are invited to submit comments regarding this proposal. Comments should refer to the proposal by name and/or OMB approval number (2577–0094) and should be sent to: Joseph F. Lackey, Jr., OMB Desk Officer, Office of Management and Budget, Room 10235, New Executive Office Building, Washington, DC 20503.

FOR FURTHER INFORMATION CONTACT: Wayne Eddins, Reports Management Officer, Q, Department of Housing and Urban Development, 451 Seventh Street, Southwest, Washington, DC 20410; e-mail Wayne_Eddins@HUD.gov; telephone (202) 708–2374. This is not a toll-free number. Copies of the proposed forms and other available documents submitted to OMB may be obtained from Mr. Eddins.

SUPPLEMENTARY INFORMATION: The Department has submitted the proposal for the collection of information, as described below, to OMB for review, as required by the Paperwork Reduction Act (44 U.S.C. Chapter 35). The Notice lists the following information: (1) The title of the information collection proposal; (2) the office of the agency to collect the information; (3) the OMB approval number, if applicable; (4) the description of the need for the information and its proposed use; (5) the agency form number, if applicable; (6) what members of the public will be affected by the proposal; (7) how frequently information submissions will be required; (8) an estimate of the total number of hours needed to prepare the information submission including number of respondents, frequency of response, and hours of response; (9) whether the proposal is new, an extension, reinstatement, or revision of an information collection requirement; and (10) the name and telephone number of an agency official familiar with the proposal and of the OMB Desk Officer for the Department.

This Notice also lists the following information:

Title of Proposal: General Conditions of the Construction—Public Housing Programs.

OMB Approval Number: 2577–0094.

Form Numbers: HUD–5370.

Description of the Need for the Information and Its Proposed Use: The General Conditions provide PHAs, contractors and subcontractors performance and compliance requirements for project construction under the conventional bid method and modernization construction contracts. Clauses were implemented by 24 CFR 85.36.

Frequency of Submission: On Occasion.

Reporting Burden:

	Number of respondents	×	Frequency of response	×	Hours per response	=	Burden hours
Application	2,694		1		1		2,694

Total Estimated Burden Hours: 2,694.

Status: Reinstatement, with change.

Authority: Section 3507 of the Paperwork Reduction Act of 1995, 44 U.S.C. 35, as amended.

Dated: October 11, 2000.

Wayne Eddins,

Departmental Reports Management Officer, Office of the Chief Information Officer.

[FR Doc. 00–26844 Filed 10–18–00; 8:45 am]

BILLING CODE 4210–01–M

DEPARTMENT OF THE INTERIOR

Fish and Wildlife Service

Notice of Receipt of Applications for Permit

Endangered Species

The following applicants have applied for a permit to conduct certain activities with endangered species. This notice is provided pursuant to section 10(c) of the Endangered Species Act of 1973, *as amended* (16 U.S.C. 1531, *et seq.*):

Applicant: George Carden Circus Intl Inc., Springfield, MO, PRT–716913, 716914, 716917.

The applicant requests a re-issuance of their permit to re-export and re-import Asian elephants (*Elephas maximus*) and progeny of the animals currently held by the applicant and any animals acquired in the United States by the applicant to/from worldwide locations to enhance the survival of the species through conservation education. This notification covers activities conducted by the applicant over a three-year period.

Applicant: Randy Miller dba Randy Miller's Predators in Action, Inc., Big Bear City, CA, PRT–034691.

The applicant requests a permit to import the remains of their tiger (*Panthera tigris*) which died while traveling overseas under US CITES PRT–018063 for conservation education purposes. The applicant intends to use the remains for conservation education purposes within the United States.

Applicant: National Marine Fisheries Service/Southwest Fisheries Center, La Jolla, CA PRT–844694.

The applicant request a permit to import biological samples (blood, tissue and stomach contents) from Green sea turtle (*Chelonia mydas*), Leatherback sea turtle (*Dermochelys coriacea*), Hawksbill sea turtle (*Eretmochelys imbricata*), and Olive Ridley sea turtle, (*Lepidochelys olivacea*) from worldwide sources for the purpose of scientific research. This notification covers activities conducted by the applicant over a three year period.

Applicant: White Oak Conservation Center, Yulee, FL, PRT–033790.

The applicant requests a permit to import 6 wild caught cheetahs (*Acinonyx jubatus*) from the Cheetah Conservation Fund, Namibia, for the purpose of captive propagation.

Applicant: University of Georgia, Institute of Ecology, Athens, GA, PRT–034780.

The applicant requests a permit to import biological samples from captive born Rothschild's Starlings (*Leucospar rothschildi*) from Durrell Wildlife Conservation Trust, Les Augres Manor, Trinity, Jersey, Channel Islands for the purpose of enhancement of the species through scientific research. This notification covers activities conducted by the applicant over a three-year period.

Applicant: Smithsonian Museum of Natural History, Washington, D.C. PRT–034656.

The applicant request a permit to import rib bone fragments from African elephant (*Loxodonta africana*) and black rhinoceros (*Diceros bicornis*) opportunistically collected from the wild from Kenya for the purpose of scientific research.

Applicant: The Peregrine Fund, Boise, ID, PRT–034604.

On October 13, 2000, the U.S. Fish and Wildlife Service issued a permit to the Peregrine Fund for the import of one blood sample (10ML) from a captive-held Harpy eagle (*Harpia harpyja*) from Panama. The 30-day public comment period required by section 10(c) of the Endangered Species Act was waived. The Service determined that an emergency affecting the care and health of the eagle existed and that no reasonable alternative was available to the applicant.

Marine Mammals

The public is invited to comment on the following application for a permit to conduct certain activities with marine

mammals. The application was submitted to satisfy requirements of the Marine Mammal Protection Act of 1972, *as amended* (16 U.S.C. 1361 *et seq.*) and the regulations governing marine mammals (50 CFR 18).

Applicant: U.S.G.S. Alaska Science Center, Anchorage AK, PRT–690038.

Permit Type: Take, import, and export for scientific research.

Name and Number of Animals: Polar bear (*Ursus maritimus*), 200.

Summary of Activity To Be Authorized: The applicant has requested renewal and amendment of the permit for take activities, import and export to include: Chemically immobilize; ear-tag; tattoo; paint-mark; remove tooth; measure (including bio-electrical impedance); weigh; collect samples of blood, blubber, skin, and claw shavings (from the captured bears and from legally hunted and salvaged bears); fit up to 50 females bears with a neck collar of either a VHF radio transmitter device or a satellite transmitter device; recapture and release; import an unspecified number of biological samples from legally acquired polar bears; and export an unspecified number of biological samples acquired from the captured bears, from legally hunted bears, and from salvaged bears for the purpose of scientific research.

Source of Marine Mammals: North and Northwest coast of Alaska, pack and fast-ice of the Beaufort, Bering, and Chukchi Seas, and import samples from Canada, Greenland, Norway, or Russia.

Period of Activity: From the issuance date of the permit to October 31, 2005.

Applicant: Florida Museum of Natural History, Gainesville, FL, PRT–033974.

Permit Type: Take for scientific research.

Name and Number of Animals: Manatees (*Trichechus* spp.), approximately 50 samples from 25 individual animals annually.

Summary of Activity To Be Authorized: The applicant has requested a permit to conduct stable isotopic analyses of tooth fragments taken from existing museum specimens of the three manatee species (*T. inunguis, T. manatus*, and *T. senegalensis*) and from teeth that have been naturally shed from captive individuals of West Indian manatees (*T. manatus*). These teeth fragments will be analyzed for the determination of diet composition to compare the modern manatees' diet with ancient manatee diet.

Source of Marine Mammals: Existing museum specimens, captive-held animals in U.S. facilities.

Period of Activity: Up to three years from the issuance date of the permit.

Applicant: U.S.G.S., Biological Resources Division, Santa Cruz, CA, PRT–672624.

Permit Type: Take for scientific research.

Name and Number of Animals: Southern sea otter (*Enhydra lutris nereis*), up to 500.

Summary of Activity To Be Authorized: The applicant has requested an amendment to the permit to authorize capture and flipper tagging of up to 500 sea otters, take blood and tooth samples from 250 animals, and instrument 135 animals with implanted radio transmitters. In addition, up to 30 of the implanted animals will be instrumented with TDRs (time/depth recorders); up to 10 of the implanted animals will be recaptured annually for the first 2 years to retrieve and replace the implanted radios; and up to 25 of these animals per year will be recaptured once for the years 3 through 5 to replace their implanted radios. No animals weighing less than 20 pounds will be surgically instrumented.

Source of Marine Mammals: Entire range of Southern sea otters in California.

Period of Activity: Up to 5 years from the issuance date of the amended permit.

Applicant: Branko Terkovich, Mendham, NJ, PRT–034570.

The applicant requests a permit to import a polar bear (*Ursus maritimus*) sport-hunted from the Lancaster Sound polar bear population, Northwest Territories, Canada for personal use.

Written data or comments should be submitted to the Director, U.S. Fish and Wildlife Service, Division of Management Authority, 4401 North Fairfax Drive, Room 700, Arlington, Virginia 22203 and must be received by the Director within 30 days of the date of this publication.

The U.S. Fish and Wildlife has information collection approval from OMB through February 28, 2001. OMB Control Number 1018–0093. Federal Agencies may not conduct or sponsor and a person is not required to respond to a collection of information unless it displays a current valid OMB control number.

Documents and other information submitted with these applications are available for review, *subject to the requirements of the Privacy Act and Freedom of Information Act,* by any party who submits a written request for a copy of such documents to the following office within 30 days of the date of publication of this notice: U.S. Fish and Wildlife Service, Office of Management Authority, 4401 North Fairfax Drive, Room 700, Arlington, Virginia 22203. Phone: (703/358–2104); FAX: (703/358–2281).

Dated: October 13, 2000.

Charlie Chandler,

Chief, Branch of Permits, Division of Management Authority.

[FR Doc. 00–26944 Filed 10–18–00; 8:45 am]

BILLING CODE 4310–55–U

DEPARTMENT OF THE INTERIOR

Fish and Wildlife Service

Aquatic Nuisance Species Task Force Risk Assessment and Management Committee Meeting

AGENCY: Fish and Wildlife Service, Interior.

ACTION: Notice of meeting.

SUMMARY: This notice announces a meeting of the Risk Assessment and Management Committee of the Aquatic Nuisance Species Task Force. The meeting topics are identified in the **SUPPLEMENTARY INFORMATION.**

DATES: The Committee will meet from 8:30 a.m. to 4:30 p.m., Wednesday, November 1, 2000; and from 8:30 a.m. to 12 p.m., Thursday, November 2, 2000.

ADDRESSES: The meeting will be held at the US Geological Survey, Biological Resources Division, Florida Caribbean Science Center, 7920 NW 71st Street, Gainesville, FL; phone (352) 378–8181.

FOR FURTHER INFORMATION CONTACT: Richard Orr, Chair, Risk Assessment and Management Committee, at (202) 208–2616 or by email at *richard_orr@os.doi.gov* or Sharon Gross, Executive Secretary, Aquatic Nuisance Species Task Force at (703) 358–2308 or by e-mail at: *sharon_gross@fws.gov*.

SUPPLEMENTARY INFORMATION: Pursuant to section 10(a)(2) of the Federal Advisory Committee Act (5 U.S.C. App. I), this notice announces a meeting of the Aquatic Nuisance Species Task Force Assessment and Management Committee. The Task Force was established by the Nonindigenous Aquatic Nuisance Prevention and Control Act of 1990 (16 U.S.C. 4701–4741). Topics to be addressed at this meeting include: Discussion on the Screening Process, risk analysis and pathway identification components of the Draft National Invasive Species Management Plan; examination of the methodology and outreach used in conducting the Florida Sturgeon Culture Risk Assessment; review of new information on Black Carp obtained since the original risk assessment was

completed (1996) to determine if changes to the recommendations are warranted; discussion on the development of a risk assessment of the Asian Swamp Eel; and review of future committee goals and projects.

Minutes of the meeting will be maintained by the Executive Secretary, Aquatic Nuisance Species Task Force, Suite 851, 4401 North Fairfax Drive, Arlington, Virginia 22203–1622; and the Chair of the Ballast Water and Shipping Committee at the Environmental Standards Division, Office of Operations and Environmental Standards, U.S. Coast Guard (G–MSO–4), 2100 Second Street, SW, room 1309, Washington, DC 20593–0001. Minutes for the meetings will be available at these locations for public inspection during regular business hours, Monday through Friday.

Dated: October 13, 2000.

William Knapp,

Acting Co-Chair, Aquatic Nuisance Species Task Force, Acting Assistant Director—Fisheries and Habitat Conservation.

[FR Doc. 00–26839 Filed 10–18–00; 8:45 am]

BILLING CODE 4310–55–M

DEPARTMENT OF THE INTERIOR

Fish and Wildlife Service

Establishment of Caddo Lake National Wildlife Refuge

AGENCY: Fish and Wildlife Service, Interior.

ACTION: Notice.

SUMMARY: The Director of the U.S. Fish and Wildlife Service approved the establishment of the Caddo Lake National Wildlife Refuge on portions of the approximately 8,500-acre Longhorn Army Ammunition Plant in Harrison County, Texas. This refuge will be established for the purpose of migratory bird and other fish and wildlife management, conservation, and protection.

DATES: This action was effective on October 13, 2000.

FOR FURTHER INFORMATION CONTACT: Barbara Rose with the Fish and Wildlife Service in Albuquerque, NM, 505–248–7412.

SUPPLEMENTARY INFORMATION: The authority to transfer real property jurisdiction, custody, and control from one Federal agency to another is found in the Federal Property and Administrative Services Act of 1949, as amended (40 U.S.C. 471–535). In addition, the Act of May 19, 1948, Public Law 80–537 (16 U.S.C. 667b) provides that, upon request, ''real property which is under the jurisdiction or control of a Federal agency and no longer required by such agency * * * may, notwithstanding any other provisions of law, be transferred, without reimbursement * * * to the Secretary of the Interior if the real property has particular value in carrying out the national migratory bird management program.'' The Secretary also has authority pursuant to the Fish and Wildlife Coordination Act of 1934, as amended (16 U.S.C. 661–666c), and the Fish and Wildlife Act of 1956, as amended (16 U.S.C. 742 a–j; 70 Stat. 1119), to enter into cooperative agreements to manage fish and wildlife resources on lands owned by or under the jurisdiction of another entity. The National Wildlife Refuge System Administration Act of 1966, as amended (16 U.S.C. 668dd), consolidates all areas administered by the Fish and Wildlife Service for the management, conservation, and protection of fish and wildlife (including those areas managed by the Service under cooperative agreement with other Federal departments or agencies) into the National Wildlife Refuge System and places restrictions on the transfer, exchange, or other disposal of lands within the System.

The Director approved the establishment of the Caddo Lake National Wildlife Refuge on October 13, 2000. The Service will enter into a cooperative agreement with the Department of the Army that will establish the Caddo Lake National Wildlife Refuge. Initially we will obtain permission to conduct migratory bird and other fish and wildlife protection and conservation activities on portions of the approximately 8,500-acre Longhorn Army Ammunition Plant (LHAAP). In this arrangement the Army will retain primary jurisdiction, custody, and control of the LHAAP, and we will create an ''overlay'' refuge on a portion of the Army lands. The Army is in the process of cleaning up those areas within the LHAAP that have environmental contaminants. When the Army, the Environmental Protection Agency, and the Service agree that the lands within the overlay refuge are suitable for transfer, we could then accept primary jurisdiction, custody, and control over these lands, and the overlay status would dissipate.

The Army acquired the land from a number of private landowners and established the LHAAP in October 1942 to produce trinitrotoluene (TNT). The plant became excess to the Army's needs in July 1997, and on April 17, 1998, we expressed an interest in receiving a no-cost transfer of the lands under the authority of the Act of May 19, 1948. The site is located within Harrison County, Texas, in the unincorporated village of Karnack and is adjacent to the Caddo Lake State Park and Wildlife Management Area. The area is in the northeastern part of the State, about 3 miles (4.8 km) from the Louisiana State line and 25 miles (40 km) from the City of Shreveport, Louisiana. It is about 15 miles (24 km) from the cities of Marshall and Jefferson, Texas.

The refuge is designed to protect one of the highest quality old-growth bottomland hardwood forests in the southeastern United States. The hardwood forest lies along Harrison Bayou, and the associated wetlands are located along the shore of Caddo Lake. These wetlands are listed as a ''Wetland of International Significance'' under the Ramsar Convention on Wetlands and is one of only 17 such designated areas in the United States.

The establishment of this refuge will ensure the conservation and protection of the migratory and resident waterfowl and neotropical migratory birds associated with these wetlands. Studies have listed up to 224 species of birds, 22 species of amphibians, 46 species of reptiles, and 93 species of fish in this area. A total of 20 animal species of concern are located or potentially located on the LHAAP and adjacent Caddo Lake. They include seven species of fish, six species of reptiles, six species of birds and four species of mammals. Two species are federally listed under the Endangered Species Act (Louisiana black bear and bald eagle).

In compliance with the National Environmental Policy Act of 1969, we prepared a draft Environmental Assessment (EA), distributed on August 11, 2000, that evaluated four alternatives and their potential impacts. A public meeting/open house was held on August 21, 2000, in Karnack, Texas, at the Caddo Lake State Park. The comment period closed on September 11, and the final EA was completed on September 21, 2000. The proposal was coordinated with the State of Texas Clearinghouse in the Governor's Office, the Congressional delegations, Harrison County, Texas Parks and Wildlife Department, The State Historic Preservation Office, Texas Natural Resource Conservation Commission, the Department of the Army, the U.S. Army Corps of Engineers, the U.S. Environmental Protection Agency, and the General Services Administration—Greater Southwest Region, the ''Friends of Longhorn,'' the Caddo Lake Institute, and other local citizens. All comments received at the public meeting and via

letters, faxes, and email during the comment period were considered and incorporated in the final EA.

We received a total of 64 letters on the draft EA, 59 of which supported the preferred alternative proposal for an overlay refuge with potential transfer of jurisdiction, custody, and control to the Service. One letter expressed opposition to any Service involvement at the LHAAP because of possible impacts on future economic development. Two letters supported an option of retaining the refuge in overlay status only; two letters expressed no preference. A total of 52 people attended the public meeting, and 14 spoke during the meeting. All speakers and questioners at the meeting and open house expressed support for some Service involvement at the LHAAP. In addition, the Army has published a number of environmental documents dealing with the cleanup of contaminants during the last decade. Many public meetings have been held and continue to be held to update the public on the cleanup process.

Based on the documentation contained in the environmental assessment, we signed a Finding of No Significant Impact on September 22, 2000. We will establish an overlay refuge and potentially accept primary jurisdiction, custody and control of up to 8,500 acres at the Longhorn Army Ammunition Plant in Harrison County, Texas. A draft Conceptual Management Plan has been prepared.

Primary Author: Barbara Wyman, Division of Realty, National Wildlife Refuge System.

Dated: October 13, 2000.

Jamie Rappaport Clark,

Director, U.S. Fish and Wildlife Service.

[FR Doc. 00–26845 Filed 10–18–00; 8:45 am]

BILLING CODE 4310–55–U

DEPARTMENT OF THE INTERIOR

Bureau of Indian Affairs

Indian Gaming; Notice of Approved Amended Tribal-State Compact

AGENCY: Bureau of Indian Affairs, Interior.

ACTION: Notice of Approved Amended Tribal-State Compact.

SUMMARY: Pursuant to section 11 of the Indian Gaming Regulatory Act of 1988, Pub. L. 100–497, 25 U.S.C. 2710, the Secretary of the Interior shall publish, in the **Federal Register**, notice of approved Tribal-State Compacts for the purpose of engaging in Class III gaming activities on Indian lands. The Assistant Secretary—Indian Affairs, Department of the Interior, through his delegated authority, has approved the Amended Compact of 1992 between the Menominee Indian Tribe of Wisconsin and the State of Wisconsin, which was executed on August 18, 2000.

DATES: This action is effective October 19, 2000.

FOR FURTHER INFORMATION CONTACT: George T. Skibine, Director, Indian Gaming Management, Bureau of Indian Affairs, Washington, DC 20240, (202) 219–4066.

Dated: October 4, 2000.

Kevin Gover,

Assistant Secretary—Indian Affairs.

[FR Doc. 00–26882 Filed 10–18–00; 8:45 am]

BILLING CODE 4310–02–P

DEPARTMENT OF THE INTERIOR

Bureau of Indian Affairs

Indian Gaming; Notice of Approved Tribal State Compact

AGENCY: Bureau of Indian Affairs, Interior.

ACTION: Notice of Approved Tribal-State Compact.

SUMMARY: Pursuant to section 11 of the Indian Gaming Regulatory Act of 1988 (IGRA), Pub. L. 100–497, 25 U.S.C. 2710, the Secretary of the Interior shall publish, in the **Federal Register**, notice of approved Tribal-State Compacts for the purpose of engaging in Class III gaming activities on Indian lands. The Assistant Secretary—Indian Affairs, Department of the Interior, through his delegated authority, has approved the Tribal-State Compact between the State of California and the Pauma Band of Mission Indians, which was executed on May 1, 2000.

DATES: This action is effective October 19, 2000.

FOR FURTHER INFORMATION CONTACT: George T. Skibine, Director, Office of Indian Gaming Management, Bureau of Indian Affairs, Washington, DC, 20240 (202) 219–4066.

Dated: October 6, 2000.

Kevin Gover,

Assistant Secretary—Indian Affairs.

[FR Doc. 00–26881 Filed 10–18–00; 8:45 am]

BILLING CODE 4310–02–P

DEPARTMENT OF THE INTERIOR

Bureau of Land Management

[OR–958–1430–ET; HAG01–0010; OR–52315]

Proposed Withdrawal Public Meeting Announcement; Oregon

AGENCY: Bureau of Land Management, Interior.

ACTION: Notice.

SUMMARY: The United States Department of Agriculture, Forest Service, filed an application to withdraw approximately 9,533 acres of National Forest System lands to protect recreational, scenic, cultural and traditional use values in addition to threatened, endangered, and sensitive flora and fauna natural resource values. This notice identifies the time, place, and location of two public open houses whereby the public is invited to be involved in and comment on the Forest Service's proposed action.

DATES: Written comments should be received on or before January 4, 2001.

ADDRESSES: Written comments should be sent to the Forest Supervisor, Rogue River National Forest, 333 W. 8th Street, Medford, Oregon 97501.

SUPPLEMENTARY INFORMATION: The United States Department of Agriculture, Forest Service filed an application to withdraw National Forest System lands from location and entry under the mining laws, subject to valid existing rights to protect an area on the Rogue River and Umpqua National Forests known as the Huckleberry Patch. The notice of segregation became effective on the date the notice of withdrawal was originally published in the **Federal Register**, which was October 5, 2000, 65 FR page 59464. Notice is hereby given that an open house relative to the proposed withdrawal will be held at the following locations on the dates shown at the times indicated:

Douglas County Library, 1409 NE Diamond Lake Blvd., Roseburg, Oregon from 4 P.M. to 7 P.M., on November 20th, 2000. Questions may be directed to Jake O'Dowd, Forest Service 541–957–3354.

Jackson County Courthouse, 10 S. Oakdale, Medford, Oregon from 4 P.M. to 7 P.M., on November 21st, 2000. Questions may be directed to Bengt Hamner, Forest Service 541–858–2304.

Dated: October 12, 2000.

Robert D. DeViney, Jr.,

Chief, Branch of Realty and Records Services.

[FR Doc. 00–26840 Filed 10–18–00; 8:45 am]

BILLING CODE 4310–33–P

DEPARTMENT OF THE INTERIOR

Bureau of Reclamation

Glen Canyon Adaptive Management Work Group and Glen Canyon Technical Work Group

AGENCY: Bureau of Reclamation, Interior.

ACTION: Notice of public meetings.

SUMMARY: The Adaptive Management Program (AMP) was implemented as a result of the Record of Decision on the Operation of Glen Canyon Dam Final Environmental Impact Statement and to comply with consultation requirements of the Grand Canyon Protection Act (Pub.L. 102–575) of 1992. The AMP provides an organization and process to ensure the use of scientific information in decisionmaking concerning Glen Canyon Dam operations and protection of the affected resources consistent with the Grand Canyon Protection Act. The AMP has been organized and includes a federal advisory committee (the Glen Canyon Adaptive Management Work Group, or AMWG), a technical work group (the Glen Canyon Technical Work Group, or TWG), a monitoring and research center, and independent review panels. The TWG is a subcommittee of the AMWG and provides technical advice and information for the AMWG to act upon.

DATES AND LOCATION: The AMWG will conduct two public meetings as follows:

Phoenix, Arizona—January 10–11, 2001

The meeting will begin at 9:30 a.m. and conclude at 4:00 p.m. on the first day and begin at 8:00 a.m. and conclude at 12 noon on the second day. The meeting will be held at the Bureau of Indian Affairs—Western Regional Office, 2 Arizona Center, Conference Rooms A and B (12th Floor), 400 North 5th Street, Phoenix, Arizona.

Agenda: The purpose of the meeting will be to discuss the following: management objectives, basin hydrology, FY 2002 budget, development of the AMP Strategic Plan, environmental compliance, and other administrative issues pertaining to the AMP.

The Glen Canyon Technical Work Group will conduct one public meeting as follows:

Phoenix, Arizona—November 8–9, 2000

The meeting will begin at 9:30 a.m. and conclude at 4 p.m. on the first day and begin at 8 a.m. and conclude at 12 noon on the second day. The meeting will be held at the Arizona Department of Water Resources, 500 N. Third Street, Conference Room B (Nov. 8) and Conference Room A (Nov. 9), Phoenix, Arizona.

Agenda: The purpose of the meeting will be to discuss the following: management objectives and information needs, fundamentals of power generation and repayment, basin hydrology and expected Glen Canyon Dam releases, FY 2001 and 2002 budgets, Protocol Evaluation Panel reviews, agenda topics for the AMWG meeting on January 10–11, 2001, and other administrative issues pertaining to the AMP.

Agenda items may be revised prior to any of the meetings. Final agendas will be posted 15 days in advance of each meeting and can be found on the Bureau of Reclamation's website under Environmental Programs at: *http://www.uc.usbr.gov.* Time will be allowed on each agenda for any individual or organization wishing to make formal oral comments (limited to 10 minutes) at the meetings.

To allow full consideration of information by the TWG and AMWG members, written notice must be provided to Randall Peterson, Bureau of Reclamation, Upper Colorado Regional Office, 125 South State Street, Room 6107, Salt Lake City, Utah 84138–1102; telephone (801) 524–3758; faxogram (801) 524–3858; E-mail at: *rpeterson@uc.usbr.gov* at least FIVE (5) days prior to the meeting. Any written comments received will be provided to the TWG and AMWG members at the meetings.

FOR FURTHER INFORMATION CONTACT: Randall Peterson, telephone (801) 524–3758; faxogram (801) 524–3858; *rpeterson@uc.usbr.gov.*

Dated: October 16, 2000.

Eluid L. Martinez,

Commissioner, Bureau of Reclamation.

[FR Doc. 00–26934 Filed 10–18–00; 8:45 am]

BILLING CODE 4310–MN–P

DEPARTMENT OF JUSTICE

Office of Justice Programs

Agency Information Collection Activities: Proposed Collection; Comment Request

ACTION: Notice of Information Collection Under Review; Reinstatement with changes of a previously approved collection for which approval has expired: The Survey of Inmates in Local Jails Pretest.

The Department of Justice, Office of Justice Programs, has submitted the following information collection request to the Office of Management and Budget for review and clearance in accordance with the Paperwork Reduction Act of 1995. This proposed information collection is published to obtain comments from the public and affected agencies. Comments are encouraged and will be accepted until December 18, 2000.

Request written comments and suggestions from the public and affected agencies concerning the proposed collection of information. Your comments should address one or more of the following four points:

(1) Evaluate whether the collection of information is necessary for the proper performance of the functions of the agency, including whether the information will have practical utility;

(2) Evaluate the accuracy of the agency's estimate of the burden of the collection of information, including the validity of the methodology and assumptions used;

(3) Enhance the quality, utility and clarity of the information to be collected; and

(4) Minimize the burden of the collection of information on those who are to respond, including through the use of appropriate automated, electronic, mechanical, or other technological collection techniques or other forms of information technology, *e.g.* permitting electronic submission of responses.

If you have additional comments, suggestions, or additional information, especially regarding the estimated public burden and associated response time, please write to Dr. Jan M. Chaiken, Director, Bureau of Justice Statistics, 810 Seventh St. NW., Washington, DC 20531. If you need a copy of the collection instruments with instructions, or have additional information, please contact Doris James Wilson at (202) 616–3625.

Overview of this information collection:

(1) Type of information collection: Reinstatement with changes of a previously approved collection for which approval has expired.

(2) The title of the Form/Collection: The Survey of Inmates in Local Jails Pretest.

(3) The agency form number and the applicable component of the Department sponsoring the collection:

Forms: SIJ–43(X) CAPI instrument; and SIJ–50(X) Sampling Questionnaire. Corrections Statistics, Bureau of Justice Statistics, Office of Justice Programs, United States Department of Justice.

(4) Affected public who will be asked to respond, as well as a brief abstract: Primary: Individuals and households. Others: State and local governments. The pretest will include an estimated 100 personal interviews with inmates held in local facilities. The pretest will approximate the national survey including a full scale implementation of the CAPI questionnaire, automated data control systems, sample selection instruments, and procedures related to the National Survey. This is a pretest for a survey that will profile jail inmates nationwide to determine trends in inmate composition, criminal history, drug abuse, mental and medical status, gun use and crime, and to report on victims of crime. This pretest will allow us to identify problems and to make improvements prior to the national survey to ensure an accurate data set. The data from the national survey will be used by the Bureau of Justice Statistics in published reports and the U.S. Congress, Executive Office of the President, practitioners, researchers, students, the media, and others interested in criminal justice statistics. No other collection series provides these data.

(5) An estimate of the total number of respondents and the amount of time needed for an average respondent to respond: 100 personal interviews each taking an average 1 hour to respond.

(6) An estimate of the total public burden (in hours) associated with the collection: 100 annual burden hours.

If additional information is required, contact: Mr. Robert B. Briggs, Clearance Officer, United States Department of Justice, Information Management and Security Staff, Justice Management Division, Suite 1220, 1331 Pennsylvania Ave., NW., National Place Building, Washington, DC 20530.

Dated: October 13, 2000.

Robert B. Briggs,

Department Clearance Officer, Department of Justice.

[FR Doc. 00–26923 Filed 10–18–00; 8:45 am]

BILLING CODE 4410–18–M

DEPARTMENT OF JUSTICE

Office of Justice Programs

Agency Information Collection Activities: Proposed Collection; Comment Request

ACTION: Notice of information collection under review; summary of sentenced population movement annual data collection national prisoner statistics.

The Department of Justice, Office of Justice Programs, has submitted the following information collection request to the Office of Management and Budget for review and clearance in accordance with the Paperwork Reduction Act of 1995. This proposed information collection is published to obtain comments from the public and affected agencies. Comments are encouraged and will be accepted until December 18, 2000.

Request written comments and suggestions from the public and affected agencies concerning the proposed collection of information. Your comments should address one or more of the following four points:

(1) Evaluate whether the collection of information is necessary for the proper performance of the functions of the agency, including whether the information will have practical utility;

(2) Evaluate the accuracy of the agency's estimate of the burden of the collection of information, including the validity of the methodology and assumptions used;

(3) Enhance the quality, utility and clarity of the information to be collected; and

(4) Minimize the burden of the collection of information on those who are to respond, including through the use of appropriate automated, electronic, mechanical, or other technological collection techniques or other forms of information technology, e.g. permitting electronic submission of responses.

If you have additional comments, suggestions, or additional information, especially regarding the estimated public burden and associated response time, please write to Dr. Jan M. Chaiken, Director, Bureau of Justice Statistics, 810 Seventh St. NW, Washington, D.C. 20531. If you need a copy of the collection instrument with instructions, or have additional information, please contact Page Harrison at 202–514–0809, or via facsimile at 202–514–1757.

Overview of this information collection:

(1) Type of information collection: Extension of a currently approved collection.

(2) The title of the Form/Collection: Summary of Sentenced Population Movement National Prisoner Statistics.

(3) The agency form number and the applicable component of the Department sponsoring the collection. Form: NPS–1. Corrections Statistics, Bureau of Justice Statistics, Office of Justice Programs, United States Department of Justice.

(4) Affected public who will be asked to respond, as well as a brief abstract: Primary: State Departments of Corrections. Others: The Federal Bureau of Prisons. For the NPS–1 form, 52 central reporters (one from each state, the District of Columbia, and the Federal Bureau of Prisons) responsible for keeping records on inmates will be asked to provide prison admission information for the following categories: New court commitments, parole violators, other conditional release violators returned, transfers from other jurisdictions, AWOLs and escapees returned, and returns from appeal and bond. Respondents will also be asked to provide prison release information for the following categories: Expirations of sentence, commutations, other conditional releases, probations, supervised mandatory releases, paroles, other conditional releases, deaths by cause, AWOLs, escapes, transfers to other jurisdictions, and releases to appeal or bond. In addition, respondents will be asked for data on jurisdictional and custody populations at yearend by gender for inmates with over 1 year maximum sentence, and inmates with a year or less maximum sentence; for information on the number of state inmates housed in facilities operated by a county or other local authority on December 31 to ease prison crowding; the number of state inmates housed in a privately operated correctional facility; inmates on December 31 by race and Hispanic origin; testing of incoming inmates for HIV; and HIV infection and AIDS cases on December 31.

The Bureau of Justice Statistics uses this information in published reports and for the U.S. Congress, the Executive Office of the President, practitioners, researchers, students, the media, and others interested in criminal justice statistics.

(5) An estimate of the total number of respondents and the amount of time needed for an average respondent to respond: 52 respondents each taking an average 5 hours to respond.

(6) An estimate of the total public burden (in hours) associated with the collection: 338 annual burden hours.

If additional information is required, contact: Mr. Robert B. Briggs, Clearance

Officer, United States Department of Justice, Information Management and Security Staff, Justice Management Division, Suite 1220, 1331 Pennsylvania Ave., NW, National Place Building, Washington, DC 20530.

Dated: October 13, 2000.

Robert B. Briggs,

Department Clearance Officer, Department of Justice.

[FR Doc. 00–26924 Filed 10–18–00; 8:45 am]

BILLING CODE 4410–18–M

DEPARTMENT OF JUSTICE

Office of Justice Programs

Agency Information Collection Activities: Proposed Collection; Comment Request

ACTION: Notice of Information Collection Under Review: New Collection: Deaths In Custody, 2000—Report on Inmates Under Jail Jurisdiction/Inmates in Private and Multi-Jurisdictional Jails.

The Department of Justice, Office of Justice Programs, has submitted the following information collection request to the Office of Management and Budget for review and clearance in accordance with the Paperwork Reduction Act of 1995. This proposed information collection is published to obtain comments from the public and affected agencies. Comments are encouraged and will be accepted until December 18, 2000.

Request written comments and suggestions from the public and affected agencies concerning the proposed collection of information. Your comments should address one or more of the following four points:

(1) Evaluate whether the collection of information is necessary for the proper performance of the functions of the agency, including whether the information will have practical utility;

(2) Evaluate the accuracy of the agency's estimate of the burden of the collection of information, including the validity of the methodology and assumptions used;

(3) Enhance the quality, utility and clarity of the information to be collected; and

(4) Minimize the burden of the collection of information on those who are to respond, including through the use of appropriate automated, electronic, mechanical, or other technological collection techniques or other forms of information technology, *e.g.* permitting electronic submission of responses.

If you have additional comments, suggestions, or additional information, especially regarding the estimated public burden and associated response time, please write to Dr. Jan M. Chaiken, Director, Bureau of Justice Statistics, 810 Seventh St. NW., Washington, DC 20531. If you need a copy of the collection instruments with instructions, or have additional information, please contact Christopher Mumola at (202) 307–5995, or via facsimile at 202–514–1757.

Overview of this information collection:

(1) Type of information collection. New Collection.

(2) The title of the Form/Collection: Deaths in Custody, 2000—Report on Inmates Under Jail Jurisdiction/Inmates in Private and Multi-Jurisdictional Jails.

(3) The agency form number and the applicable component of the Department sponsoring the collection. Forms: CJ–9 and CJ–9A. Corrections Statistics Unit, Bureau of Justice Statistics, Office of Justice Programs, United States Department of Justice.

(4) Affected public who will be asked to respond, as well as a brief abstract: Primary: Local jail administrators, (one reporter from each of the 3,083 local jail jurisdictions in the United States) responsible for keeping records on inmates will be asked to provide information for the following categories: (a) Between January 1, 2000, and December 31, 2000, the number of deaths of persons under the supervision of their jail jurisdiction; and (b) As of January 1, 2000, and December 31, 2000, the number of male and female inmates under their jail jurisdiction; and (c) Between January 1, 2000, and December 31, 2000, the number of male and female inmates admitted to their jail jurisdiction; and (d) Between January 1, 2000, and December 31, 2000, the average daily population of all jail confinement facilities with their jurisdiction; and (e) The name, date of birth, gender, race/ethnic origin, and date of death for each inmate who died in their jail jurisdiction between January 1, 2000, and December 31, 2000; and (f) The admission date, legal status, and current offenses for each inmate who died in their jail jurisdiction between January 1, 2000, and December 31, 2000; and (g) The location and cause of each inmate death that took place in their jail jurisdiction between January 1, 2000, and December 31, 2000; and (h) Whether or not an autopsy was conducted by a medical examiner or coroner to determine the cause of each inmate death that took place in their jail jurisdiction between January 1, 2000, and December 31, 2000; and (i) In cases where the cause of death was illness/natural causes (including AIDS), whether or not the cause of each inmate death was the result of a pre-existing medical condition, and whether or not the inmate had been receiving treatment for that medical condition; and (j) In cases where the cause of death was accidental injury, suicide, or homicide, when and where the incident causing the inmate's death took place.

As part of the conference agreement for FY2000 appropriations, the Bureau of Justice Statistics was directed by the U.S. Congress ''to implement a voluntary annual reporting system of all deaths occurring in law enforcement custody.'' This collection will supplement the data on prison inmate deaths which the Bureau of Justice Statistics already collects as part of the National Prisoners Statistics Program and the National Corrections Reporting Program. The Bureau of Justice Statistics will use this new information to publish an annual report on deaths in custody. The report will be made available to the U.S. Congress, Executive Office of the President, practitioners, researchers, students, the media, and others interested in criminal justice statistics and data.

(5) An estimate of the total number of respondents and the amount of time needed for an average respondent to respond: 3,083 respondents each taking an average 30 minutes to respond.

(6) An estimate of the total public burden (in hours) associated with the collection: 1,541.5 annual burden hours.

If additional information is required, contact: Mr. Robert B. Briggs, Clearance Officer, United States Department of Justice, Information Management and Security Staff, Justice Management Division, Suite 1220, 1331 Pennsylvania Avenue, NW., Washington, DC 20530.

Dated: October 13, 2000.

Robert B. Briggs,

Department Clearance Officer, United States Department of Justice.

[FR Doc. 00–26925 Filed 10–18–00; 8:45 am]

BILLING CODE 4410–18–M

DEPARTMENT OF JUSTICE

Office of Justice Program

Agency Information Collection Activities: Proposed Collection; Comment Request

ACTION: Notice of Information Collection Under Review: Extension of a Currently Approved Collection: Capital Punishment Report of Inmates under Sentence of Death.

The Department of Justice, Office of Justice Programs, has submitted the following information collection request to the Office of Management and Budget for review and clearance in accordance with the Paperwork Reduction Act of 1995. This proposed information collection is published to obtain comments from the public and affected agencies. Comments are encouraged and will be accepted until December 18, 2000.

Request written comments and suggestions from the public and affected agencies concerning the proposed collection of information. Your comments should address one or more of the following four points:

(1) Evaluate whether the collection of information is necessary for the proper performance of the functions of the agency, including whether the information will have practical utility;

(2) Evaluate the accuracy of the agency's estimate of the burden of the collection of information, including the validity of the methodology and assumptions used;

(3) Enhance the quality, utility and clarity of the information to be collected; and

(4) Minimize the burden of the collection of information on those who are to respond, including through the use of appropriate automated, electronic, mechanical, or other technological collection techniques or other forms of information technology, *e.g.* permitting electronic submission of responses.

If you have additional comments, suggestions, or additional information, especially regarding the estimated public burden and associated response time, please write to Dr. Jan M. Chaiken, Director, Bureau of Justice Statistics, 810 Seventh St. NW, Washington, DC 20531. If you need a copy of the collection instrument with instructions, or have additional information, please contact Tracy L. Snell at 202–616–3288, or via facsimile at 202–514–1757.

Overview of the information collection:

(1) Type of information collection: Extension of a currently approved collection.

(2) The title of the Form/Collection: Capital Punishment Report of Inmates under Sentence of Death.

(3) The agency form number and the applicable component of the Department sponsoring the collection. Form: NPS–8 Report of Inmates Under Sentence of Death; NPS–8A Update Report of Inmates Under Sentence of Death; NPS–8B Status of Death Penalty—No Statute in Force; and NPS–8C Status of Death Penalty—Statute in Force. Corrections Unit, Bureau of Justice Statistics, Office of Justice Programs, United States Department of Justice.

(4) Affected public who will be asked to respond, as well as a brief abstract: Primary: State Departments of Corrections and Attorneys General. Others: The Federal Bureau of Prisons. Approximately 104 respondents (two from each State, the District of Columbia, and the Federal Bureau of Prisons) responsible for keeping records on inmates under sentence of death in their jurisdiction and in their custody will be asked to provide information for the following categories: condemned inmates' demographic characteristics, legal status at the time of capital offense, capital offense for which imprisoned, number of death sentences imposed, criminal history information, reason for removal and current status if no longer under sentence of death, method of execution, and cause of death by other than by execution. The Bureau of Justice Statistics uses this information in published reports and for the U.S. Congress, Executive Office of the President, State officials, international organizations, researchers, students, the media, and others interested in criminal justice statistics.

(5) An estimate of the total number of responses and the amount of time estimated for an average response: 292 responses at 30 minutes each for the NPS–8; 3,452 responses at 30 minutes each for the NPS–8A; and 52 responses at 15 minutes each for the NPS–8B or NPS–8C.

(6) An estimate of the total public burden (in hours) associated with the collection: 1,885 annual burden hours.

If additional information is required contact: Mr. Robert B. Briggs, Clearance Officer, United States Department of Justice, Information Management and Security Staff, Justice Management Division, Suite 1220, 1331 Pennsylvania Ave. NW, National Place Building, Washington, DC 20530.

Dated: October 13, 2000.

Robert B. Briggs,

Department Clearance Officer, United States Department of Justice.

[FR Doc. 00–26926 Filed 10–18–00; 8:45 am]

BILLING CODE 4410–18–M

DEPARTMENT OF LABOR

Employment Standards Administration

Proposed Collection; Comment Request

ACTION: Notice.

SUMMARY: The Department of Labor, as part of its continuing effort to reduce paperwork and respondent burden, conducts a preclearance consultation program to provide the general public and Federal agencies with an opportunity to comment on proposed and/or continuing collections of information in accordance with the Paperwork Reduction Act of 1995 (PRA95) [44 U.S.C. 3506(c)(2)(A)]. This program helps to ensure that requested data can be provided in the desired format, reporting burden (time and financial resources) is minimized, collection instruments are clearly understood, and the impact of collection requirements on respondents can be properly assessed. Currently, the Employment Standards Administration is soliciting comments concerning the proposed extension collection of the following information collections: (1) Application to Employ Special Industrial Homeworkers and Workers with Disabilities (WH–2, WH–226, and WH–226A); and (2) Request for Employment Information (CA–1027). Copies of the proposed information collection requests can be obtained by contacting the office listed below in the addressee section of this Notice.

DATES: Written comments must be submitted to the office listed in the addressee section below on or before December 18, 2000.

ADDRESSES: Ms. Patricia A. Forkel, U.S. Department of Labor, 200 Constitution Ave., NW., Room S–3201, Washington, DC 20210, telephone (202) 693–0339 (this is not a toll-free number), fax (202) 693–1451.

SUPPLEMENTARY INFORMATION:

Applications To Employ Special Industrial Homeworkers and Workers With Disabilities (WH–2, WH–226, WH–226A)

I. Background

Section 11(d) of the Fair Labor Standards Act (FLSA) authorizes the Secretary of Labor to regulate, restrict, or prohibit industrial homework as necessary to prevent evasion of the minimum wage requirements of the Act. The Department of Labor has restricted homework in seven industries to those employees who obtain certificates. Individual certificates may be issued to any industry for an individual homeworker who is unable to leave home because of a disability or must remain home to care for an invalid. Section 14c of the FLSA provides for the employment of workers with disabilities at subminimum wages in order to prevent curtailment of employment opportunities for such individuals.

Employers utilizing the provisions of Section 14c must obtain certificates issued by the Department of Labor. The WH–2 is used by employers to obtain certificates to employ individual homeworkers in one of the restricted homework industries. The WH–226 and supplemental data Form 226A are used by employers to obtain authorization to employ workers with disabilities in certain establishments at subminimum wages.

II. Review Focus

The Department of Labor is particularly interested in comments which:

• Evaluate whether the proposed collection of information is necessary for the proper performance of the functions of the agency, including whether the information will have practical utility;

• Evaluate the accuracy of the agency's estimate of the burden of the proposed collection of information, including the validity of the methodology and assumptions used;

• Enhance the quality, utility and clarity of the information to be collected; and

• Minimize the burden of the collection of information on those who are to respond, including through the use of appropriate automated, electronic, mechanical, or other technological collection techniques or other forms of information technology, *e.g.,* permitting electronic submissions of responses.

III. Current Actions

The Department of Labor seeks the extension of approval to collect this information in order to provide employers wishing to employ homeworkers and workers with disabilities under the provisions of sections 11(d) and 14(c) of the FLSA, with the necessary certificates for such employment.

Type of Review: Extension.

Agency: Employment Standards Administration.

Title: Application for Special Industrial Homeworker's Certificate (WH–2); Application for Authority to Employ Workers with Disabilities at Special Minimum Wages (WH–226); Supplemental Data Sheet for Application for Authority to Employ Workers with Disabilities at Special Minimum Wages (WH–226A).

OMB Number: 1215–0005.

Agency Numbers: WH–2, WH–226, WH–226A.

Affected Public: Individuals or households; Business or other for-profit; Farms; Not-for-profit institutions; State, Local, or Tribal Government.

Frequency: On occasion.

Form	Respondents	Responses	Time per response (min)	Burden hours
WH–2	50	50	30	25
WH–226	4,500	4,500	45	3,375
WH–226A	4,500	12,000	45	9,000

Total Respondents: 4,550.

Total Responses: 16,550.

Estimate Total Burden Hours: 12,400.

Total Burden Cost (capital/startup): $0.

Total Burden Cost (operating/maintenance): $1,638.

Comments submitted in response to this notice will be summarized and/or included in the request for Office of Management and Budget approval of the information collection request; they will also become a matter of public record.

Request for Employment Information (CA–1027)

I. Background

Payment of compensation for partial disability to injured Federal workers is required by 5 U.S.C. 8106. That section also requires the Office of Workers' Compensation Programs (OWCP) to obtain information regarding a claimant's earnings during a period of eligibility to compensation. The CA–1027, Request for Employment Information, is the form used to obtain information for an individual who is employed by a private employer. The information is used to determine the claimant's entitlement to compensation benefits.

II. Review Focus

The Department of Labor is particularly interested in comments which:

• Evaluate whether the proposed collection of information is necessary for the proper performance of the functions of the agency, including whether the information will have practical utility;

• Evaluate the accuracy of the agency's estimate of the burden of the proposed collection of information, including the validity of the methodology and assumptions used;

• Enhance the quality, utility and clarity of the information to be collected; and

• Minimize the burden of the collection of information on those who are to respond, including through the use of appropriate automated, electronic, mechanical, or other technological collection techniques or other forms of information technology, *e.g.*, permitting electronic submissions of responses.

III. Current Actions

The Department of Labor seeks the extension of approval to collect this information in order to determine a claimant's eligibility for compensation benefits.

Review: Extension.

Agency: Employment Standards Administration.

Title: Request for Earnings Information.

OMB Number: 1215–0105.

Agency Numbers: CA–1027.

Affected Public: Business or other for-profit.

Frequency: On occasion.

Total Respondents: 500.

Total Responses: 500.

Time Per Response: 15 minutes.

Estimated Total Burden Hours: 125.

Total Burden Cost (capital/startup): $0.

Total Burden Cost (operating/maintenance): $180.

Comments submitted in response to this notice will be summarized and/or included in the request for Office of Management and Budget approval of the information collection request; they will also become a matter of public record.

Dated: October 13, 2000.

Margaret J. Sherrill,

Chief, Branch of Management Review and Internal Control, Division of Financial Management Office of Management, Administration and Planning, Employment Standards Administration.

[FR Doc. 00–26883 Filed 10–18–00; 8:45 am]

BILLING CODE 4510–27–M

DEPARTMENT OF LABOR

Pension and Welfare Benefits Administration

[Prohibited Transaction Exemption 2000–49; Exemption Application Nos. D–10879]

Actuarial Sciences Associates, Inc. (ASA) and ASA Fiduciary Counselors Inc. (ASA) Counselors), Located in Alexandria, VA

AGENCY: Pension and Welfare Benefits Administration, U.S. Department of Labor (the Department).

ACTION: Notice of Technical Correction.

On October 11, 2000, the Department published in the **Federal Register** (65 FR 60454) an individual exemption which permits a transaction between a party in interest with respect to the Plumbers and Pipe Fitters National Pension Fund (the Fund) and an account that holds certain assets of the Fund managed by ASA or ASA Counselors, while serving as independent named fiduciary in connection with Prohibited Transaction Exemption 99–46 (64 FR 61944, November 15, 1999).

On page 60454 of the grant notice, the Prohibited Transaction Exemption (PTE) number was erroneously listed as 2000–47. The PTE number for this exemption is 2000–49. Therefore, the Department hereby corrects such error by designating the exemption as PTE 2000–49.

FOR FURTHER INFORMATION CONTACT: Ms. Angelena LeBlanc of the Department at (202) 219–8883. (This is not a toll-free number.)

Signed at Washington, D.C., this 13th day of October, 2000.

Ivan L. Strasfeld,

Director of Exemption Determinations, Pension and Welfare Benefits Administration, U.S. Department of Labor.

[FR Doc. 00–26790 Filed 10–18–00; 8:45 am]

BILLING CODE 4510–29–P

DEPARTMENT OF LABOR

Pension and Welfare Benefits Administration

[Prohibited Transaction Exemption 2000–50; Exemption Application No. D–10871, et al.]

Grant of Individual Exemptions; IRA FBO Floyd A. Ross (the IRA)

AGENCY: Pension and Welfare Benefits Administration, Labor.

ACTION: Grant of Individual Exemptions.

SUMMARY: This document contains exemptions issued by the Department of Labor (the Department) from certain of the prohibited transaction restrictions of the Employee Retirement Income Security Act of 1974 (the Act) and/or the Internal Revenue Code of 1986 (the Code).

Notices were published in the **Federal Register** of the pendency before the Department of proposals to grant such exemptions. The notices set forth a summary of facts and representations contained in each application for exemption and referred interested persons to the respective applications for a complete statement of the facts and representations. The applications have been available for public inspection at the Department in Washington, D.C. The notices also invited interested persons to submit comments on the requested exemptions to the Department. In addition the notices stated that any interested person might submit a written request that a public hearing be held (where appropriate). The applicants have represented that they have complied with the requirements of the notification to interested persons. No public comments and no requests for a hearing, unless otherwise stated, were received by the Department.

The notices of proposed exemption were issued and the exemptions are being granted solely by the Department because, effective December 31, 1978, section 102 of Reorganization Plan No. 4 of 1978, 5 U.S.C. App. 1 (1996), transferred the authority of the Secretary of the Treasury to issue exemptions of the type proposed to the Secretary of Labor.

Statutory Findings

In accordance with section 408(a) of the Act and/or section 4975(c)(2) of the Code and the procedures set forth in 29 CFR Part 2570, Subpart B (55 FR 32836, 32847, August 10, 1990) and based upon the entire record, the Department makes the following findings:

(a) The exemptions are administratively feasible;

(b) They are in the interests of the plans and their participants and beneficiaries; and

(c) They are protective of the rights of the participants and beneficiaries of the plans.

IRA FBO Floyd A. Ross (the IRA) Located in Ukiah, California

[Prohibited Transaction Exemption 2000–50; Exemption Application No. D–10871]

Exemption

The sanctions resulting from the application of section 4975 of the Code, by reason of section 4975(c)(1)(A) through (E) of the Code, shall not apply to the proposed purchase by the IRA of certain closely held common stock (the Stock) from the Ross Family Trust (the Family Trust), a disqualified person with respect to the IRA,[1] provided that the following conditions are satisfied:

(a) The purchase is a one-time transaction for cash;

(b) The terms and conditions of the purchase are at least as favorable to the IRA as those available in a comparable arm's length transaction with an unrelated party;

(c) The IRA pays a purchase price that is no greater than the fair market value of the Stock at the time of the transaction, as established by a qualified, independent appraiser;

(d) The IRA pays no commissions nor other expenses in connection with the purchase; and

(e) The fair market value of the Stock represents no more than 25 percent of the total assets of the IRA at the time of the transaction.

For a more complete statement of the facts and representations supporting the Department's decision to grant this exemption, refer to the notice of proposed exemption published on September 7, 2000 at 65 FR 54313.

FOR FURTHER INFORMATION CONTACT: Ms. Karin Weng of the Department, telephone (202) 219–8881. (This is not a toll-free number.)

Platt Orthopedics Retirement Plan (the Plan) Located in Rancho Mirage, California

[Prohibited Transaction Exemption 2000–51; Exemption Application No. D–10875]

Exemption

The sanctions resulting from the application of section 4975 of the Code, by reason of section 4975(c)(1)(A) through (E) of the Code, shall not apply to the proposed sale by the Plan of certain improved real property (the Property) to Morris and Arthur Platt, disqualified persons with respect to the Plan,[2] provided that the following conditions are satisfied: (1) The sale is a one-time transaction for cash; (2) the Plan pays no commissions nor other expenses relating to the sale; and (3) the Plan receives an amount equal to the average of two independent appraisals

[1] Pursuant to 29 CFR 2510.3–2(d), the IRA is not within the jurisdiction of Title I of the Act. However, there is jurisdiction under Title II of the Act, pursuant to section 4975 of the Code.

[2] Because Morris and Arthur Platt, who are owner-employees, and Arthur Platt's wife are the only participants in the Plan, the Plan is not within the jurisdiction of Title I of the Act. However, there is jurisdiction under Title II of the Act, pursuant to section 4975 of the Code.

of the Property's fair market value, as of the date of the sale.

For a more complete statement of the facts and representations supporting the Department's decision to grant this exemption, refer to the notice of proposed exemption published on September 7, 2000 at 65 FR 54314.

FOR FURTHER INFORMATION CONTACT: Ms. Karin Weng of the Department, telephone (202) 219–8881. (This is not a toll-free number.)

General Information

The attention of interested persons is directed to the following:

(1) The fact that a transaction is the subject of an exemption under section 408(a) of the Act and/or section 4975(c)(2) of the Code does not relieve a fiduciary or other party in interest or disqualified person from certain other provisions to which the exemptions does not apply and the general fiduciary responsibility provisions of section 404 of the Act, which among other things require a fiduciary to discharge his duties respecting the plan solely in the interest of the participants and beneficiaries of the plan and in a prudent fashion in accordance with section 404(a)(1)(B) of the Act; nor does it affect the requirement of section 401(a) of the Code that the plan must operate for the exclusive benefit of the employees of the employer maintaining the plan and their beneficiaries;

(2) These exemptions are supplemental to and not in derogation of, any other provisions of the Act and/or the Code, including statutory or administrative exemptions and transactional rules. Furthermore, the fact that a transaction is subject to an administrative or statutory exemption is not dispositive of whether the transaction is in fact a prohibited transaction; and

(3) The availability of these exemptions is subject to the express condition that the material facts and representations contained in each application accurately describes all material terms of the transaction which is the subject of the exemption.

Signed at Washington, D.C., this 13th day of October, 2000.

Ivan Strasfeld,

Director of Exemption Determinations, Pension and Welfare Benefits Administration, U.S. Department of Labor.

[FR Doc. 00–26788 Filed 10–18–00; 8:45 am]

BILLING CODE 4510–29–P

DEPARTMENT OF LABOR

Pension and Welfare Benefits Administration

[Application No. D–10651, et al.]

Proposed Exemptions; Merrill Lynch & Co., Inc. (ML&Co.)

AGENCY: Pension and Welfare Benefits Administration, Labor.

ACTION: Notice of proposed exemptions.

SUMMARY: This document contains notices of pendency before the Department of Labor (the Department) of proposed exemptions from certain of the prohibited transaction restrictions of the Employee Retirement Income Security Act of 1974 (the Act) and/or the Internal Revenue Code of 1986 (the Code).

Written Comments and Hearing Requests

All interested persons are invited to submit written comments or request for a hearing on the pending exemptions, unless otherwise stated in the Notice of Proposed Exemption, within 45 days from the date of publication of this **Federal Register** Notice. Comments and requests for a hearing should state: (1) The name, address, and telephone number of the person making the comment or request, and (2) the nature of the person's interest in the exemption and the manner in which the person would be adversely affected by the exemption. A request for a hearing must also state the issues to be addressed and include a general description of the evidence to be presented at the hearing.

ADDRESSES: All written comments and request for a hearing (at least three copies) should be sent to the Pension and Welfare Benefits Administration, Office of Exemption Determinations, Room N–5649, U.S. Department of Labor, 200 Constitution Avenue, N.W., Washington, D.C. 20210. Attention: Application No. ____, stated in each Notice of Proposed Exemption. The applications for exemption and the comments received will be available for public inspection in the Public Documents Room of the Pension and Welfare Benefits Administration, U.S. Department of Labor, Room N–5638, 200 Constitution Avenue, N.W., Washington, D.C. 20210.

Notice to Interested Persons

Notice of the proposed exemptions will be provided to all interested persons in the manner agreed upon by the applicant and the Department within 15 days of the date of publication in the **Federal Register**. Such notice shall include a copy of the notice of proposed exemption as published in the **Federal Register** and shall inform interested persons of their right to comment and to request a hearing (where appropriate).

SUPPLEMENTARY INFORMATION: The proposed exemptions were requested in applications filed pursuant to section 408(a) of the Act and/or section 4975(c)(2) of the Code, and in accordance with procedures set forth in 29 CFR Part 2570, Subpart B (55 FR 32836, 32847, August 10, 1990). Effective December 31, 1978, section 102 of Reorganization Plan No. 4 of 1978, 5 U.S.C. App. 1 (1996), transferred the authority of the Secretary of the Treasury to issue exemptions of the type requested to the Secretary of Labor. Therefore, these notices of proposed exemption are issued solely by the Department.

The applications contain representations with regard to the proposed exemptions which are summarized below. Interested persons are referred to the applications on file with the Department for a complete statement of the facts and representations.

Merrill Lynch & Co., Inc. (ML&Co.)

Located in New York, NY

[Application No. D–10651]

Proposed Exemption

Based on the facts and representations set forth in the application, the Department is considering granting an exemption under the authority of section 408(a) of the Act and section 4975(c)(2) of the Code and in accordance with the procedures set forth in 29 CFR Part 2570, Subpart B (55 FR 32836, 32847, August 10, 1990).[1]

Section I. Covered Transactions

If the exemption is granted, the restrictions of section 406(a)(1)(A) through (D) of the Act and the sanctions resulting from the application of section 4975 of the Code, by reason of section 4975(c)(1)(A) through (D) of the Code, shall not apply to (1) the purchase or sale by employee benefit plans (the Plans), other than Plans sponsored by ML&Co. or its affiliates (collectively, the Applicants), of Market Index Target-Term Securities (the MITTS), which are debt securities issued by the Applicants; and (2) the extension of credit by the Plans to the Applicants in connection with the holding of the MITTS.

[1] For purposes of this proposed exemption, references to provisions of Title I of the Act, unless otherwise noted herein, refer also to corresponding provisions of the Code.

This proposed exemption is subject to the general conditions that are set forth below in Section II.

Section II. General Conditions

(a) The MITTS are made available by the Applicants in the ordinary course of their business to Plans as well as to customers which are not Plans.

(b) The decision to invest in the MITTS is made by a Plan fiduciary (the Independent Plan Fiduciary) or a participant in a Plan that provides for participant-directed investments (the Plan Participant), which is independent of the Applicants.

(c) The Applicants do not have any discretionary authority or control or provide any investment advice, within the meaning of 29 CFR 2510.3–21(c), with respect to the Plan assets involved in the transactions.

(d) The Plans pay no fees or commissions to ML&Co. or its affiliates in connection with the transactions covered by the requested exemption, other than the mark-up for a principal transaction permissible under Part II of Prohibited Transaction Class Exemption (PTCE) 75–1 (40 FR 50845, October 31, 1975).[2]

(e) ML&Co. agrees to notify Plan investors in the prospectus (the Prospectus) for the MITTS that, at the time of acquisition, no more than 15 percent of a Plan's assets should be invested in any of the MITTS.

(f) The MITTS do not have a duration which exceeds 9 years from the date of issuance.

(g) Prior to a Plan's acquisition of any of the MITTS, the Applicants fully disclose, in the Prospectus, to the Independent Plan Fiduciary or Plan Participant, all of the terms and conditions of such MITTS, including, but not limited to, the following:

(1) A statement to the effect that the return calculated for the MITTS will be denominated in U.S. dollars;

(2) The specified index (the Index) or Indexes on which the rate of return on the MITTS is based;

(3) A numerical example, capable of being understood by the average investor, which explains the calculation of the return on the MITTS at maturity and reflects, among other things, (i) a hypothetical initial value and closing value of the applicable Index, and (ii) the effect of any adjustment factor on the percentage change in the applicable Index;

(4) The date on which the MITTS are issued;

(5) The date on which the MITTS will mature and the conditions of such maturity;

(6) The initial date on which the value of the Index is calculated;

(7) Any adjustment factor or other numerical methodology that would affect the rate of return, if applicable;

(8) The ending date on which interest is determined, calculated and paid;

(9) Information relating to the calculation of payments of principal and interest, including a representation to the effect that, at maturity, the beneficial owner of the MITTS is entitled to receive the entire principal amount, plus an amount derived directly from the growth in the Index (but in no event less than zero);

(10) All details regarding the methodology for measuring performance;

(11) The terms under which the MITTS may be redeemed;

(12) The exchange or market where the MITTS are traded or maintained; and

(13) Copies of the proposed and final exemptions relating to the exemptive relief provided herein, upon request.

(h) The terms of a Plan's investment in the MITTS are at least as favorable to the Plan as those available to an unrelated non-Plan investor in a comparable arm's length transaction at the time of such acquisition.

(i) In the event the MITTS are delisted from either the American Stock Exchange (the AMEX), the New York Stock Exchange (the NYSE) or any other nationally-recognized securities exchange, Merrill Lynch, Pierce, Fenner & Smith Incorporated (MLPF&S) will apply for trading through the National Association of Securities Dealers Automated Quotations System (NASDAQ), which requires that there be independent market-makers establishing a market for such securities in addition to MLPF&S. If there are no independent market-makers, the exemption will no longer be considered effective.

(j) The MITTS are rated in one of the three highest generic rating categories by at least one nationally-recognized statistical rating service at the time of their acquisition.

(k) The rate of return for the MITTS is objectively determined and, following issuance, the Applicants retain no authority to affect the determination of the return for such security, other than in connection with a ''market disruption event'' (the Market Disruption Event) that is described in the Prospectus for the MITTS.

(l) The MITTS are based on an Index that is—

(1) Created and maintained[3] by an entity that is unrelated to the Applicants and is a standardized and generally-accepted Index of securities; or

(2) Created by the Applicants or an affiliate, but maintained by an entity that is unrelated to the Applicants,

(i) Consists either of standardized and generally-accepted Indexes or an Index comprised of at least 10 publicly-traded securities that are not issued by the Applicants or their affiliates, are designated in advance and listed in the Prospectus for the MITTS, (Under either circumstance, neither the Applicants nor their affiliates may unilaterally modify the composition of the Index, including the methodology comprising the rate of return.),

(ii) Meets the requirements for an Index in Rule 19b–4 (Rule 19b–4) under the Securities Exchange Act of 1934 (the 1934 Securities Act), and

(iii) The index value (the Index Value) for the Index is publicly-disseminated through an independent pricing service, such as Reuters Group, PLC (Reuters) or Bloomberg L.P. (Bloomberg), or through a national securities exchange, such as the AMEX.

(m) The Applicants do not trade in any way intended to affect the value of the MITTS through holding or trading in the securities which comprise an Index.

(n) The Applicants maintain, for a period of six years, the records necessary to enable the persons described in paragraph (o) of this section to determine whether the conditions of this proposed exemption have been met, except that—

(1) A prohibited transaction will not be considered to have occurred if, due to circumstances beyond the control of the Applicants, the records are lost or destroyed prior to the end of the six year period; and

(2) No party in interest other than the Applicants shall be subject to the civil penalty that may be assessed under section 502(i) of the Act, or to the taxes imposed by section 4975(a) and (b) of the Code, if the records are not maintained, or are not available for examination as required by paragraph (o) below.

(o)(1) Except as provided in section (o)(2) of this paragraph and notwithstanding any provisions of subsections (a)(2) and (b) of section 504 of the Act, the records referred to in paragraph (n) are unconditionally

[2] The Department is providing no opinion herein as to whether any principal transactions involving debt securities would be covered by PTCE 75–1, or whether any particular mark-up by a broker-dealer for such transaction would be permissible under Part II of PTCE 75–1.

[3] For purposes of this exemption, the term ''maintain'' means that all calculations relating to the securities in the Index, as well as the rate of return of the Index, are made by an entity that is unrelated to the Applicants or their affiliates.

available at their customary location during normal business hours by:

(A) Any duly authorized employee or representative of the Department, the Internal Revenue Service or the Securities and Exchange Commission (the SEC);

(B) Any fiduciary of a participating Plan or any duly authorized representative of such fiduciary;

(C) Any contributing employer to any participating Plan or any duly authorized employee representative of such employer; and

(D) Any Plan Participant or beneficiary of any participating Plan, or any duly authorized representative of such Plan Participant or beneficiary.

(o)(2) None of the persons described above in subparagraphs (B)–(D) of paragraph (o)(1) are authorized to examine the trade secrets of the Applicants or commercial or financial information which is privileged or confidential.

Summary of Facts and Representations

1. The Applicants consist of ML&Co., MLPF&S and such other affiliates of MLPF&S that are broker-dealers registered under U.S. law. The Applicants can be further described as follows:

(a) *ML&Co.* is a Delaware corporation headquartered in New York, New York. It is a holding company that, through its subsidiaries and affiliates, provides investment, financing, insurance, and related services on a global basis. As of December 1998, ML&Co. and its subsidiaries and affiliates had total consolidated assets of approximately $299.8 billion. ML&Co. constitutes a diversified global financial services group, maintaining the following key areas of client services:

- *Corporate and Institutional Client,* providing securities trading, investment banking, and advisory services to financial institutions, corporations, and governments worldwide. Additionally, this group provides merger and acquisition advisory services and raises capital through securities underwriting and loan syndications.
- *U.S. Private Client,* providing financial services and products, advice, and execution to individuals, small businesses, and Plans, including mortgage loans and commercial real estate financing.
- *International Private Client,* providing financial planning, private banking, and trust and investment services to individuals outside the United States through a network of private bankers and specialists abroad.
- *Asset Management Client,* providing investment advisory and portfolio management services.

(b) *MLPF&S*, the principal subsidiary of ML&Co., is a registered broker-dealer under section 15 of the 1934 Act. MLPF&S is a broker in securities, options contracts, and commodity and financial futures contracts as well as a dealer in options and in corporate and municipal securities. In addition, MLPF&S is an investment banking firm that provides advice to, and raises capital for, corporations and other institutional clients, sovereigns, and municipalities. Further, MLPF&S is an underwriter of selected insurance policies.

3. *The Plans* will consist of employee benefit plans that are covered under the provisions of Title I of the Act, as amended, and subject to section 4975 of the Code. For purposes of this proposed exemption, the Plans will not consist of Plans that are sponsored and maintained by the Applicants for their own employees. In the case of the Applicants' in-house Plans, ML&Co. represents that the acquisition and holding of the MITTS by such Plans would be covered under the statutory exemption that is provided under section 408(e) of the Act.[4]

4. The Applicants represent that their activities are subject to various levels of oversight and regulation by the SEC, the Commodities Futures Trading Commission, and other federal and state regulatory agencies. The Applicants also represent that their activities are subject to the oversight of self-regulatory organizations such as the NYSE and the AMEX. The Applicants further represent that MLPF&S, as a registered broker-dealer and member of the NYSE, is subject to the Net Capital Rule 15c3–1 of the 1934 Act, which specifies the minimum net capital requirement of a broker-dealer.

5. The Applicants represent that broker-dealers routinely need additional capital in order to maintain inventories of securities for their market-making and other business activities. For these reasons, the Applicants state that they have a continuous need to borrow funds from various institutional and individual investors for use in their business operations. In response to this need, the Applicants issue various high-quality, publicly-offered debt securities generally rated in one of the three highest generic rating categories by nationally-recognized rating firms, offering varying levels of risk and potential return. Among the debt securities offered by the Applicants are the MITTS which are publicly-offered, unsecured, SEC-registered debt securities, with terms that are no longer in duration than 9 years. The MITTS will be U.S. dollar-denominated so that no foreign currency conversions will be required in the calculation of the rate of return. Further, the MITTS will offer varying levels of risk and rates of return. The MITTS are currently listed on the AMEX or the NYSE and they are issued in denominations of $10 of principal per unit, with the minimum purchase being one unit.

Thus, the MITTS may be offered on a variety of terms and formulas under which rates of return are objectively determined in accordance with certain Indexes by MLPF&S, the calculation agent. The Applicants represent that since small Plans will likely invest in the MITTS, the formulas used to calculate the rates of return will be capable of being understood by the average investor and clearly described in the ''plain English'' summary of the MITTS in the Applicants' Prospectus.

6. Due to the affiliation between ML&Co., as an issuer of the MITTS described herein, and MLPF&S, as a service provider to the Plans, the Applicants represent that they are likely to be parties in interest, as defined in section 3(14)(B) or (H) of the Act, with regard to a high percentage of Plans that purchase, hold, or sell the MITTS, regardless of whether such securities are purchased directly from the Applicants.[5] Thus, the Applicants represent that ML&Co. may be a party in interest to a Plan solely because of its affiliation with a service provider to the Plan, and as the counterparty to the Plan in a transaction where the Plan holds a MITTS issued by ML&Co. or an affiliate. Further, other affiliates of ML&Co. may be service providers to Plans on account of their roles as trustees, custodians, investment advisers, or broker-dealers for such Plans. These relationships would make ML&Co. a party in interest to those Plans and would create potential prohibited transactions in the event such Plans acquire and hold the MITTS.

[4] The Department expresses no opinion herein on whether the acquisition and holding of the MITTS by the Applicants' in-house Plans is covered under the provisions of section 408(e) of the Act. In this regard, interested persons should refer to the conditions contained in section 408(e), as well as the definitions of the terms ''qualifying employer security'' (see section 407(d)(5) of the Act) and ''marketable obligations'' (see section 407(e) of the Act).

[5] In this regard, the Applicants represent that PTCE 75–1 does not directly address transactions where there is a continuing extension of credit as a result of a sale by a broker-dealer to a plan of debt securities issued by the broker-dealer's parent corporation.

The Applicants request an administrative exemption from the Department to enable Plans to invest in the MITTS under the terms and conditions described in this proposed exemption and to avoid liability for prohibited transactions resulting from such investments.

7. The Applicants believe that while Part II of PTCE 75–1 provides relief for principal transactions between a broker-dealer and a Plan, and would cover a purchase of the broker-dealer parent's debt securities by such Plans (if the conditions required therein were met), it is questionable whether that class exemption would cover the continuing extension of credit related to the holding of any debt securities by a Plan, including the MITTS.[6]

The Applicants note that some Independent Plan Fiduciaries have expressed concern regarding the application of PTCE 75–1 to broker-dealer sales of broker-parent debt to Plans either as part of an original issue of the securities or in the secondary market. Moreover, the Applicants represent that PTCE 96–23 (61 FR 15975, April 10, 1996)[7] is unavailable to participant-directed, defined contribution Plans and other small Plans because these Plans, due to their size, are unlikely to have INHAMs responsible for making investment decisions relating to the acquisition, holding and disposition of securities in which the Plans invest.

Similarly, the Applicants note that while PTCE 84–14[8] minimizes the risk of inadvertent prohibited transactions for Plans whose assets are managed by a QPAM, they believe it is unlikely that participant-directed, defined contribution Plans or small Plans would incur the expense of a QPAM for the purchase and continued holding of the MITTS. The Applicants also believe that the additional cost of a QPAM for a small Plan with a small investment would not be cost-effective. The Applicants further explain that this cost would be uneconomical here because the QPAM would be required to continue its services for the entire period during which the MITTS are held by the Plan since the potential prohibited transaction is not just a sale or exchange, under section 406(a)(1)(A) of the Act, but is also an extension of credit, under section 406(a)(1)(B) of the Act. Accordingly, the Applicants state that the cost of a QPAM would preclude small Plans from being able to purchase the MITTS without creating the risk of a prohibited transaction.

8. The Applicants propose to continue offering the MITTS to non-Plan investors and maintain that these investors will continue to constitute a substantial market for such securities. However, for each Plan investor, the Applicants represent that the terms of the Plan's investment in the MITTS will be at least as favorable to the Plan as those available to an unrelated non-Plan investor in a comparable arm's length transaction at the time the MITTS are acquired by the Plan. Additionally, the Applicants represent that no Plan will pay the Applicants any fees or commissions in connection with transactions involving the MITTS, except for the mark-up for a principal transaction permitted under PTCE 75–1.

In addition to the aforementioned requirements, the Applicants represent that a Plan's investment in the MITTS will be restricted to those Plans for which the Applicants have no discretionary authority and do not provide investment advice with respect to the investment in the MITTS. In this regard, the decision to invest in the MITTS will be made by an Independent Plan Fiduciary or a Plan Participant, which is independent of the Applicants. Moreover, the Applicants represent that the Prospectus for each of the MITTS that are offered to the Plans will contain a recommendation that no more than 15 percent of a Plan's assets should be invested in the MITTS at the time such security is acquired by a Plan.[9]

9. The MITTS will be rated in one of the three highest generic rating categories by a nationally-recognized rating firm at the time of acquisition by a Plan. There will be no triggering events or early amortization events if the Applicants' credit rating drops below a certain level established by a rating agency. Throughout the term of any of the MITTS, the Plans will be able to access the latest bid and asked price quotations for all of the Applicants' MITTS by calling a broker or any electronic service with a recognized price quotation delivery system. If a Plan wishes to terminate a MITTS investment prior to maturity, such investor may do so by selling the debt security on the open market at the prevailing market price. However, ML&Co. may not unilaterally terminate the MITTS prior to maturity unless the MITTS are callable at a specific price which will be disclosed in the Prospectus. Assuming the MITTS are callable, ML&Co. represents that there will be no loss of principal.

10. As noted above, the rate of return for the MITTS will be based upon an Index, which may be either (a) created and maintained by an entity that is unrelated to the Applicants or (b) created by the Applicants, but maintained by an unrelated entity.

(a) *Index Created and Maintained by an Entity Unrelated to the Applicants.* This Index, which will be created by an entity that is unrelated to the Applicants, will consist of a standardized and generally-accepted index of securities, such as the Nikkei 225 Index Tokyo Stock Exchange or the Standard & Poor's 500 Index. In addition, this Index will be maintained by such unrelated entity. In other words, all calculations relating to the securities in the Index, as well as the rate of return of the Index, will be made by an entity other than the Applicants or their affiliates.

(b) *Index Created by the Applicants or an Affiliate, but Maintained by an Unrelated Entity.* This Index will be created by the Applicants or an affiliate. However, it must be maintained by an entity that is unrelated to the Applicants, such as the AMEX. In addition, the Index will consist either of standardized and generally-accepted Indexes or it will be an Index comprised of at least 10 publicly-traded securities that are not issued by the Applicants or their affiliates, are designated in advance and listed in the Prospectus for the MITTS. Under either circumstance, neither the Applicants nor their affiliates will be permitted to make any modifications to the composition of the Index, including the methodology

[6] See Footnote 2 above.

[7] PTCE 96–23 permits various transactions involving employee benefit plans whose assets are managed by an in-house asset manager (the INHAM). An INHAM is an entity which is generally a subsidiary of the employer sponsoring the plan. The INHAM is also a registered investment adviser with management and control of total assets attributable to plans maintained by the employer and its affiliates which are in excess of $50 million.

[8] PTCE 84–14 provides a class exemption for transactions between a party in interest with respect to an employee benefit plan and an investment fund (including either a single customer or pooled separate account) in which the plan has an interest, and which is managed by a qualified professional asset manager (the QPAM), provided certain conditions are met. QPAMS (e.g., banks, insurance companies, registered investment advisers with total client assets under management in excess of $50 million) are considered to be experienced investment managers for plan investors that are aware of their fiduciary duties under the Act.

[9] In this regard, the Applicants propose to include the following statement in the Prospectus for each of the MITTS, under a heading entitled ''Employer-Sponsored Plan Considerations'':

These [MITTS] Securities are being sole to Employer-Sponsored Plans pursuant to an exemption issued by the Department of Labor. In accordance with the terms of this exemption, we are required to inform such Employer-Sponsored Plans that no more than 15 percent of plan (or individual participant) assets, at the time of acquisition, should be invested in MITTS. Please note, however, that it is the responsibility of the person making the investment decision to determine whether the purchase is a prudent investment for the plan (or participant-directed account).

comprising the rate of return, unilaterally.

Further, the Index will meet the requirements for an Index in accordance with Rule 19b–4 of the 1934 Securities Act, which imposes regulatory standards on the entity maintaining the Index. Under Rule 19b–4, a self-regulatory organization, such as a securities exchange, is required to adopt trading rules, procedures and listing standards for the product classes relating to any security that the exchange proposes to list. In addition, the self-regulatory organization must maintain a surveillance program for a class of securities. If the SEC has not approved the self-regulatory organization's rules, procedures and standards, the self-regulatory organization must make a filing with the SEC prior to listing the security. According to the Applicants, this procedure provides adequate safeguards so that any MITTS that are created by the Applicants or their affiliates will meet the listing and trading standards approved by the self-regulatory organization.

Finally, the Index Value of the Index will be publicly-disseminated through an independent pricing service, such as Reuters or Bloomberg, or through a national securities exchange, such as the AMEX.

11. Price quotations with respect to the MITTS will be available on a daily basis from market reporting services, such as Bloomberg or Reuters, and the daily financial press, such as The Wall Street Journal. In the event the MITTS are delisted from either the AMEX or the NYSE, MLPF&S will apply for trading through the NASDAQ, which requires that there be independent market-makers establishing a market for the securities in addition to MLPF&S. In the event there are no independent market-makers, the Applicants represent that the exemption will no longer be considered effective.

12. The terms of each of the MITTS will be set forth with specificity. Therefore, in addition to the description of the formula for computing the rate of return, the Prospectus will include, but will not be limited to, the following information:

- A statement to the effect that the return calculated for the MITTS will be denominated in U.S. dollars;
- The specified Index or Indexes on which the rate of return on the MITTS is based;
- A numerical example, capable of being understood by the average investor, which explains the calculation of the return on the MITTS at maturity and reflects, among other things, (i) a hypothetical initial value and closing value of the applicable Index, and (ii) the effect of any adjustment factor on the percentage change in the applicable Index;
- The date on which the MITTS will be issued;
- The date on which the MITTS will mature and the conditions of such maturity;
- The initial date on which the value of the Index is calculated;
- Any adjustment factor or other numerical methodology that would affect the rate of return, if applicable;
- The ending date on which interest will be determined, calculated and paid;
- Information relating to the calculation of payments of principal and interest, including a representation to the effect that, at maturity, the beneficial owner of the MITTS will be entitled to receive the entire principal amount, plus an amount derived directly from the growth in the Index (but in no event less than zero);
- All details regarding the methodology for measuring performance;
- The terms under which the MITTS may be redeemed;
- The exchange or market where the MITTS are traded or maintained; and
- Copies of the proposed and final exemptions relating to the exemptive relief provided herein, upon request.

Aside from the Prospectus, ML&Co. does not contemplate making any ongoing communications to the MITTS investors except to the extent required under applicable securities laws.

13. The Applicants represent that the level of specificity and the descriptions of the terms of the MITTS are sufficient to ensure that, after the MITTS are issued and traded on an exchange, the Applicants cannot, with the exception of a Market Disruption Event, affect the rate of return. A Market Disruption Event may occur infrequently and is typically defined as either: (a) the suspension or material limitation, in each case, for more than two hours of trading in 10 percent or more of the securities included in the applicable Index; or (b) the suspension or material limitation for more than two hours of trading (whether by reason of movements in price otherwise exceeding levels permitted by the relevant exchange or otherwise) in: (i) futures contracts related to the Index which are traded on the Chicago Mercantile Exchange; or (ii) option contracts related to the applicable Index which are traded on the Chicago Board Options Exchange, Inc. The Applicants represent that ML&Co. does not have the discretion to determine whether a Market Disruption Event has occurred.[10] Should the Applicants determine that a Market Disruption Event has occurred on a certain date, they indicate that the date will not be taken into consideration for calculating the rate of return of the Index.

14. The Applicants represent that the principal amount of the MITTS that are the subject of this exemption will always be protected regardless of the performance of the applicable Index. Although the return may go up or down in the same direction as the performance of the applicable Index, the interest rate floor is set at zero. Thus, even where the value of the applicable Index decreases, there will be no invasion of principal if the MITTS are held until maturity.[11] However, if a Plan must sell the MITTS on the open market prior to their maturity, the market price will reflect the market's perception of the potential yield on such securities based on the current yield and interest rates for other debt securities of the same duration. This market price may

[10] For purposes of the definition of the term ''Market Disruption Event,'' a limitation on the hours in a trading day and/or number of days of trading will not constitute a Market Disruption Event if it results from an announced change in the regular business hours of the relevant exchange. Furthermore, for purposes of this definition, any limitations pursuant to NYSE Rule 80A (or any applicable rule or regulation enacted or promulgated by the NYSE, or any other self-regulatory organization, or the SEC, of similar scope as determined by MLPF&S, as the calculation agent) on trading during significant market fluctuations shall be considered ''material.''

[11] The Applicants have provided the following example to illustrate this principle by describing the return at maturity on each $10 principal investment in the MITTS that are the subject of this proposed exemption:

- Where the value of the applicable Index increases by 50 percent, the Plan is entitled to receive $15 at maturity ($10 principal plus $5 interest) because the rate of return moves in the same direction as the growth in the applicable Index;
- Where the value of the applicable Index remains unchanged during the applicable period, the Plan is entitled to receive $10 at maturity ($10 principal plus $0 interest) because the rate of return moves in the same direction as the growth in the applicable Index; and
- Where the value of the applicable Index decreases by 50 percent, the Plan is entitled to receive $10 at maturity ($10 principal and $0 interest) because the rate of return moves in the same direction as the growth in the applicable Index but in no event drops below zero.

While the foregoing examples, are simplistic, it should be noted that for some of the MITTs, such as those tied to the Standard & Poor's 500 Index, the interest payments shown above may be reduced on a daily basis by an adjustment factor (the Adjustment Factor), equal to 1.3 percent per year. On the maturity date of the MITTS, the annual application of the Adjustment Factor will result in a total reduction of the Standard & Poor's 500 Index of 8.78 percent. In effect, this reduction will reduce the Plan investor's overall interest payments. This information will be disclosed prominently in the Prospectus.

result in a loss of principal value of the investment in the MITTS in the same fashion as would occur for other debt securities.

15. The Applicants represent that they will exercise no discretion with respect to the Indexes. Further, the Applicants represent that they will not trade in any way intended to affect the value of the MITTS through holding or trading in the securities which comprise these Indexes. The Applicants will maintain written records of all of the MITTS transactions for a period of six years.

16. The Applicants represent that the MITTS may be included among assets acquired by a Plan to comprise the underlying portfolio of a ''synthetic'' guaranteed investment contract (Synthetic GIC), whereby the Plan's beneficial interest in one or more debt instruments is combined with a guarantee of future value. In this regard, the Applicants represent that they will not be the issuer, guarantor, or ''wrapper'' provider in connection with a Synthetic GIC. The Applicants represent that they are not requesting any relief for extensions of credit to such Plans and the Plan Participants, other than extensions of credit resulting from such Plan's holding of the MITTS. Accordingly, the Applicants are not requesting specific exemptive relief with respect to any additional prohibited transactions that may relate to any Synthetic GICs.

17. In summary, the Applicants represent that the proposed transactions will satisfy the statutory criteria for an exemption under section 408(a) of the Act for the following reasons:

(a) The MITTS will be made available by the Applicants in the ordinary course of their business to customers which are not Plans.

(b) The Applicants will not have any discretionary authority or control, or provide any ''investment advice,'' within the meaning of 29 CFR 2510.3–21(c), with respect to the assets of Plans which are invested in the MITTS.

(c) The Plans will pay no fees or commissions to the Applicants in connection with the transactions covered by the requested exemption, other than the mark-up for a principal transaction permissible under PTCE 75–1.

(d) The decision to invest in the MITTS will be made by an Independent Plan Fiduciary or a Plan Participant, which is independent of the Applicants.

(e) In connection with a Plan's acquisition of any of the MITTS, the Applicants will disclose to the Independent Plan Fiduciary, or, if applicable, the Plan Participant, in the Prospectus, all of the material terms and conditions concerning the MITTS.

(f) A Plan will acquire the MITTS on terms that are at least as favorable to the Plan as those available to an unrelated non-Plan investor in a comparable arm's length transaction.

(g) The MITTS will be rated in one of the three highest generic rating categories by at least one nationally-recognized statistical rating service at the time of such security's acquisition by the Plan.

(h) The rate of return for the MITTS will be objectively determined and the Applicants will retain no authority to affect the determination of such return, other than in connection with a Market Disruption Event that is described in the Prospectus for the MITTS.

(i) The Index will be: (1) created and maintained by an entity that is unrelated to the Applicants and consist of a standardized and generally-accepted Index; or (2) created by the Applicants or an affiliate, but maintained by an entity that is unrelated to the Applicants, and (i) will consist either of standardized and generally-accepted Indexes or will be an Index comprised of at least 10 publicly-traded securities that are not issued by the Applicants or their affiliates, are designated in advance, and listed in the Prospectus for the MITTS, (ii) will meet the requirements for an Index as set forth in Rule 19b–4, and (iii) the Index Value for such Index will be publicly-disseminated through an independent pricing service or a national securities exchange.

Notice to Interested Persons

The Applicants represent that because those potentially interested Plans proposing to engage in the covered transactions cannot all be identified, the only practical means of notifying Independent Plan Fiduciaries or Plan Participants of such affected Plans is by publication of the proposed exemption in the **Federal Register**. Therefore, any comments from interested persons must be received by the Department no later than 30 days from the publication of this notice of proposed exemption in the **Federal Register**.

FOR FURTHER INFORMATION CONTACT: Ms. Jan D. Broady of the Department, telephone (202) 219–8881. (This is not a toll-free number.)

General Motors Hourly-Rate Employees Pension Plan; General Motors Retirement Program for Salaried Employees; Saturn Individual Retirement Plan for Represented Team Members; Saturn Personal Choices Retirement Plan for Non-Represented Team Members; Employees' Retirement Plan for GMAC Mortgage Group; Delphi Hourly-Rate Employees Pension Plan; and Delphi Retirement Program for Salaried Employees (collectively, the Plans) Located in New York, New York

[Application Nos. D–10713; D–10714; D–10715; D–10716; and D–10717]

Proposed Exemption

The Department is considering granting an exemption under the authority of section 408(a) of the Act and section 4975(c)(2) of the Code and in accordance with the procedures set forth in 29 CFR Part 2570, Subpart B (55 FR 32836, 32847, August 10, 1990). If the exemption is granted, the restrictions of section 406(a) of the Act and the sanctions resulting from the application of section 4975 of the Code, by reason of section 4975(c)(1)(A) through (D) of the Code, shall not apply to (1) the past and continuing lease (the Lease) by the Plans to CB Richard Ellis, Inc. (CB Richard Ellis), a party in interest with respect to the Plans, of commercial space in a certain office building; and (2) the exercise, by CB Richard Ellis, of an option to renew the Lease for one additional term, provided that the following conditions are met:

(a) All the terms and conditions of the Lease, including those providing CB Richard Ellis with an option to renew the Lease, are at least as favorable to the Plans as terms and conditions the Plans could have obtained in an arm's length transaction with an unrelated party;

(b) The interests of the Plans for all purposes under the Lease, including any renewal thereof, are represented by a qualified, independent fiduciary;

(c) The rent paid by CB Richard Ellis under the Lease, including any renewal thereof, is, at all times, no less than the fair market rental value of the leased space; and

(d) The independent fiduciary monitors the Lease, and any renewal thereof, on behalf of the Plans, and takes whatever actions necessary to safeguard the interests of the Plans and their participants and beneficiaries.

EFFECTIVE DATE: This proposed exemption, if granted, will be effective as of December 17, 1998, the date on which CB Richard Ellis entered into the Lease.

Summary of the Facts and Representations

1. The Plans are the General Motors Hourly-Rate Employees Pension Plan (GM Hourly Plan); General Motors Retirement Program for Salaried Employees (GM Salaried Plan); Saturn Individual Retirement Plan for Represented Team Members (Saturn Represented Team Plan); Saturn Personal Choices Retirement Plan for Non-Represented Team Members (Saturn Non-Represented Team Plan); Employees' Retirement Plan for GMAC Mortgage Group (GMAC Plan); Delphi Hourly-Rate Employees Pension Plan (Delphi Hourly Plan); and Delphi Retirement Program for Salaried Employees (Delphi Salaried Plan). The sponsors of the Plans are General Motors Corporation (GMC), Saturn Corporation, GMAC Mortgage Group, and Delphi Automotive Systems Corporation, respectively.

The GM Hourly Plan and the GM Salaried Plan covered approximately 514,120 and 200,183 participants, respectively, as of September 30, 1999. The Saturn Represented Team Plan and the Saturn Non-Represented Team Plan covered approximately 7,507 and 2,122 participants, respectively, as of December 31, 1999. The GMAC Plan covered approximately 5,936 participants, as of December 31, 1999. The Delphi Hourly Plan and the Delphi Salaried Plan covered approximately 56,360 and 20,821 participants, respectively, as of June 1, 2000.

The Plans' assets are held in two trusts: (i) the General Motors Salaried Employees Pension Trust, which holds the assets of the GM Salaried Plan and the Delphi Salaried Plan; and (ii) the General Motors Hourly-Rate Employees Pension Trust, which holds the assets of all the other Plans (together, the Trusts). The Plans are the beneficial owners of all the assets held in their respective Trusts. The Plans had total assets of $85,009,953,138.64, as of April 30, 2000. The property, known as ''Pacific Corporate Towers'' (described in Item 2, below), had a fair market value of $241,400,000.00, as of December 31, 1999.

2. Among the assets of the Plans, held through the Trusts, is a 100% beneficial ownership interest in Pacific Corporate Towers LLC (the LLC).[12] The LLC, a Delaware limited liability company, owns a 41-story office building (*i.e.,* Pacific Corporate Towers), which is located at 200 N. Sepulveda Boulevard, El Segundo, California, and has a total of 1,542,270 square feet of rentable space. CB Richard Ellis is the property manager and leasing agent for Pacific Corporate Towers and, thus, is a party in interest with respect to the Plans. CB Richard Ellis, headquartered in Los Angeles, California, is a large asset advisor for institutional real estate owners and, as of October 1, 1998, employed 9,000 full-time employees.

3. On December 17, 1998, CB Richard Ellis entered into the Lease with the Plans for the rental of 13,687 square feet of office space on the third floor of Pacific Corporate Towers. The Lease is for a period of six years, ending on November 14, 2004. The Lease provides CB Richard Ellis with an option to renew the Lease for an additional five-year period.

Under the Lease terms, the monthly rent for the office space for the first 36 months is $32,985.67,[13] and the monthly rent for the second 36 months is $35,723.07. The renewal option requires that CB Richard Ellis pay the then prevailing fair market rent at the time of renewal, but not less than the monthly rate in effect during the second 36 months of the Lease. The Lease also provides for a one-time tenant improvement allowance of $34.78 per rentable square foot, during the first 36 months of the Lease. Finally, the Lease provides that CB Richard Ellis is responsible for its proportionate share of tax, operating, and insurance costs.[14]

4. Prior to entering into the Lease with CB Richard Ellis, the Plans, through the General Motors Investment Management Corporation, hired Pacific Green Advisors Ltd. (Pacific Green), to act as an independent fiduciary for the Plans with respect to the Lease, pursuant to an agreement dated August 24, 1998 (the Fiduciary Agreement). Pacific Green is a real estate investment advisory firm located in Torrance, California.

It is represented that Pacific Green is qualified to act as an independent fiduciary for the Plans because it serves as an asset advisor for institutional real estate owners and provides advisory services relating to overall real estate asset planning. Specifically, Pacific Green provides property management services; engages and supervises managing agents on behalf of owners; provides long-term and short-term acquisition planning services; develops market studies with respect to potential acquisitions; negotiates, drafts, and executes leases; and purchases and sells targeted properties.

In addition, Pacific Green states that it is independent of CB Richard Ellis, because: (i) Neither Pacific Green nor its affiliates have any ownership interest in CB Richard Ellis or its affiliates; (ii) neither CB Richard Ellis nor any of its affiliates have any ownership interest in Pacific Green or its affiliates; and (iii) Pacific Green and its affiliates receive no annual income from CB Richard Ellis.

5. Pursuant to the Fiduciary Agreement, Pacific Green was retained to determine on behalf of the Plans whether the Lease would be in the best interests of the Plans and their participants and beneficiaries. In order to make this determination, Pacific Green specifically agreed to: (i) Perform such review and analysis as it deemed necessary to determine the fair market rental value of the leased space; (ii) determine whether the terms and conditions of the Lease, including basic rental and allowances, in the aggregate, were at least as favorable to the Plans as those available in an arm's length transaction with an unrelated party; (iii) determine whether the Lease, as proposed, would be in the best interests of the Plans; (iv) negotiate the terms of the Lease on behalf of the Plans; and (v) determine whether to grant approval of the Lease, or take any other action with respect to the Lease, on behalf of the Plans.

6. Pacific Green represents that, in order to determine whether the terms and conditions of the Lease would be fair to the Plans and the rent to be paid thereunder would be fair market value, it inspected the subject office space, evaluated the competitive office space market in El Segundo, California, and reviewed recent rentals of office space in Pacific Corporate Towers, as well as recent rentals of competitive office space in the local area.

[12] The applicant states that the assets of the LLC are deemed to be ''plan assets'' under the Department's regulations (see 29 CFR 2510.3–101) because the Plans own a 100% beneficial ownership interest in the LLC. Thus, all transactions between the LLC and persons that are parties in interest with respect to the Plans invested therein would be subject to the prohibited transaction restrictions of the Act.

[13] This rental amount per month would equal approximately $395,820 annually ($32,985 × 12 = $395,820). With 13,687 square feet of rental space, the annual rental amount per square foot would be approximately $28.92 during the first 36 months.

[14] It is represented that the cost of the one-time tenant improvement allowance and other expenses paid for by Pacific Corporate Towers were factored into the rental rate for the leased space.

The Department expresses no opinion in this proposed exemption as to whether the expenses incurred by the Plans, through the Trusts, relating to the tenant improvements provided for CB Richard Ellis would violate any provision of Part 4 of Title I of the Act. In this regard, the Department notes that section 404(a) of the Act requires, among other things, that plan fiduciaries act prudently and solely in the interest of the plan's participants and beneficiaries when making investment decisions on behalf of a plan. In addition section 404(a) of the Act requires that plan fiduciaries act for the exclusive purpose of providing benefits to participants and beneficiaries and to defray reasonable expenses of administering the plan.

Pacific Green represents that, after conducting this market survey, it completed negotiations on behalf of the Plans with respect to the Lease terms, including the renewal option. Then on November 16, 1998, John M. Williams, President of Pacific Green, rendered a report to the Plans. In his report, Mr. Williams stated that the Lease, as proposed, was fair to the Plans and that the proposed rental rate constituted the fair market rent for the office space. Mr. Williams further opined that the terms of the Lease, including the renewal option, were in the best interests of the Plans.

7. Pursuant to the Fiduciary Agreement, Pacific Green also accepted the continuing duty to monitor compliance with the terms and conditions of the Lease and to enforce the rights of the Plans with respect to the Lease and any renewal thereof. Pacific Green represents that it understands and acknowledges its duties and responsibilities as a fiduciary to the Plans under the Act. Pacific Green also agreed to take any actions necessary to ensure that CB Richard Ellis' obligations as lessee are fully performed. If CB Richard Ellis exercises its option to extend the Lease for five more years, Pacific Green will negotiate the terms of the extended Lease and will continue to serve as the independent fiduciary for the Plans.[15]

8. Only after Pacific Green determined that the Lease was in the best interests of the Plans, the parties entered into the Lease agreement on December 17, 1998. The applicant represents that the Lease was, and is, in the best interests of the Plans because it contains arm's length terms and conditions and a fair market rental rate for the leased space. In addition, the Plans did not have to pay any leasing commissions in connection with the transaction. The Lease reduces the amount of vacant rentable office space in Pacific Corporate Towers, resulting in greater cash flow to Pacific Corporate Towers over the term of the Lease, which should have a favorable impact on the value of that investment for the Plans.

9. In summary, the applicant represents that the subject transactions satisfy the statutory criteria of section 408(a) of the Act because: (a) All the terms and conditions of the Lease are at least as favorable to the Plans as those the Plans could have obtained in an arm's length transaction with an unrelated party; (b) the interests of the Plans for all purposes under the Lease are represented by Pacific Green, a qualified, independent fiduciary; (c) Pacific Green has determined that the rent paid by CB Richard Ellis under the Lease is the fair market rental value of the leased space and will ensure that such rent remains so, upon any renewal of the Lease; and (d) Pacific Green will continue to monitor the Lease on behalf of the Plans and take whatever actions necessary to safeguard the interests of the Plans and their participants and beneficiaries.

FOR FURTHER INFORMATION CONTACT: Ms. Karin Weng of the Department, telephone (202) 219–8881. (This is not a toll-free number.)

Butler-Johnson Corporation; Profit Sharing Plan (the Plan); Located in San Jose, California;

[Application No. D–10780]

Proposed Exemption

The Department is considering granting an exemption under the authority of section 408(a) of the Act and section 4975(c)(2) of the Code and in accordance with the procedures set forth in 29 CFR Part 2570, Subpart B (55 FR 32836, 32847, August 10, 1990). If the exemption is granted, the restrictions of sections 406(a), 406(b)(1) and (b)(2) of the Act and the sanctions resulting from the application of section 4975 of the Code, by reason of section 4975(c)(1)(A) through (E) of the Code, shall not apply, effective as of October 25, 1996, to:

(1) the past sale on October 25, 1996, by the Plan of four residential mortgage notes (the Purchased Notes) to the Greater Bay Trust Company (the Trustee), the trustee of the Plan and, as such, a party in interest with respect to the Plan;

(2) the past sale on October 25, 1996, by the Plan of a seventy-one percent (71%) interest (the Interest) in a certain parcel of real property located in Oakland, California (the Oakland Property) to the Trustee;

(3) the ''makewhole'' payment made by the Trustee to the Plan on October 25, 1996 in connection with the Plan's investment losses with respect to certain other real property previously owned by the Plan which was sold to an unrelated party on June 28, 1996; and

(4) the proposed payment to the Plan of the accrued but unpaid interest (the Accrued Interest Payment) that was due on the Purchased Notes at the time of the past sale to the Trustee, as well as two other mortgage notes that were in default while held by the Plan (collectively, the Notes) which resulted in foreclosures on the underlying properties, and the proposed payment to the Plan of an additional interest payment for the period from October 25, 1996, until the date that the Accrued Interest Payment is made to the Plan (the Additional Interest Payment), based on the total amount of the Accrued Interest Payment; provided the following conditions are met:

(A) The sale of the Purchased Notes and the Interest by the Plan to the Trustee were one-time transactions for cash;

(B) The Plan was not required to pay any fees or commissions in connection therewith;

(C) The Plan received prices for the Purchased Notes constituting no less than the greater of either:

(i) the outstanding principal balances for each Purchased Note, or

(ii) the fair market value of each Purchased Note, as of the date of the sale transactions;

(D) The Plan received a purchase price for the Interest constituting no less than seventy-one percent (71%) of the fair market value of the Oakland Property, as of the date of the sale transaction;

(E) The Accrued Interest Payment to be paid by the Trustee to the Plan represents an amount equal to the total accrued but unpaid interest that was due on the Notes on October 25, 1996;

(F) The Additional Interest Payment to be paid by the Trustee to the Plan represents a reasonable rate of interest on the amount of accrued but unpaid interest on the Notes that was due to the Plan on October 25, 1996 (i.e., the Accrued Interest Payment referred to in (E) above), as determined by an appropriate third party source (*i.e.,* the U.S. Treasury rate for 3-month Treasury Bills);

(G) The Trustee provides the Department with documentation, within thirty (30) days of the Accrued Interest Payment and Additional Interest Payment, which verifies that the total amount of such payments have been made to the Plan;

(H) The Trustee, as the responsible fiduciary for the Plans, took appropriate actions necessary to safeguard the interests of the Plan and its participants and beneficiaries in connection with the past transactions, and will take whatever actions are necessary to continue to protect the Plan's interest with respect to the Accrued Interest Payment and the Additional Interest Payment;

(I) The Plan received a reasonable rate of return on the Purchased Notes and

[15] Should it become necessary in the future to appoint a successor independent fiduciary (the Successor) to replace Pacific Green, the applicant will notify the Department at least 30 days in advance of the appointment of the Successor. Any such Successor will be independent and have responsibilities and experience comparable to those of Pacific Green.

the Interest during the period of time that it held these assets; and

(J) Upon any sale or other disposition of any of the Purchased Notes or the Interest by the Trustee, in the event the Trustee receives proceeds in excess of the amount which the Trustee paid the Plan for such assets, the additional proceeds shall be promptly forwarded to the Plan by the Trustee.

Summary of Facts and Representations

1. The Plan is a defined contribution profit sharing plan which had approximately 103 participants and total assets of $2,949,910 as of December 31, 1996. The sponsor of the Plan is Butler-Johnson Corporation (the Employer), a California privately-held corporation. The trustee of the Plan is Greater Bay Trust Company (*i.e.,* the Trustee), which is a division of Cupertino National Bank & Trust, having its principal place of business in Palo Alto, California. The Trustee has discretionary authority for the investment of Plan assets, subject to investment guidelines provided by a committee (the Committee) comprised of employees and officers of the Employer.

2. In 1992, the Committee and the Trustee established guidelines for the purchase of real estate loans for the Plan. The guidelines provided that the Trustee was permitted to invest the Plan's assets in certain real estate loans secured by single family dwellings.

The Trustee invested the Plan's assets in six mortgage notes (the Notes) evidencing real estate loans made to persons unrelated to the Employer. The Notes were originated between May 1992 and December 1994. The Plan acquired a one hundred percent (100%) ownership of each of the Notes except one, referred to as the Kakos Note, in which the Plan acquired a seventy-one percent (71%) ownership interest. The remaining twenty-nine percent (29%) interest in the Kakos Note was held by an unrelated investor whom the Trustee represents was neither a disqualified person under the Code nor a party in interest under the Act with respect to the Plan. The Trustee states that all obligors under the Notes were independent of the Plan and the Trustee. As of December 31, 1995, the Plan's total investment in the Notes represented approximately twenty-eight percent (28%) of the fair market value of the Plan's assets.

3. All of the Notes resulted in default and two of the Notes resulted in foreclosure. On December 30, 1993, the Trustee, on behalf of the Plan, foreclosed on the Kakos Note. The Plan consequently acquired a seventy-one percent (71%) interest (*i.e.,* the Interest) in the underlying real property in Oakland, California (*i.e.,* the Oakland Property) which secured the Kakos Note. On January 20, 1995, the Trustee, on behalf of the Plan, foreclosed on another Note (referred to as the Bennett Note). The Plan consequently acquired the underlying real property in Grass Valley, California (the Grass Valley Property) which secured that Note. The Trustee represents that at the time of these foreclosures, the Oakland Property and the Grass Valley Property (together, the Properties) each had fair market values which were less than the outstanding principal balances of the Notes which they secured.

4. The Trustee represents that due to the circumstances surrounding the default on four of the Notes and the foreclosure on the remaining two Notes, the Trustee determined that the Notes and the Properties did not constitute suitable investments for the Plan.[16] The Trustee maintains that this determination included a finding by the Trustee that the Notes were not marketable to third parties. Based on the Trustee's belief that it shared responsibility in failing to meet certain due diligence obligations in investing in the Notes, the Trustee determined to take the steps necessary to make the Plan ''whole'' with respect to its investments in the Notes and the Properties, as follows:

(a) The Grass Valley Property was sold to an unrelated party on June 28, 1996 for $83,532.71, which was $56,041.80 less than the outstanding principal balance of the Note which the Grass Valley Property had secured. This investment loss was recovered by the Plan in a cash payment made to the Plan by the Trustee, as discussed below.

(b) The Trustee placed the Interest (*i.e.,* the Plan's interest in the Oakland Property) on the market for over two years. Finally, the Trustee purchased the Interest from the Plan on October 25, 1996 for $151,875.58. This amount was equal to the outstanding principal balance that had been due on the Kakos Note prior to default.

(c) The Trustee purchased the remaining four Notes (*i.e.,* the Purchased Notes) from the Plan on October 25, 1996 at prices constituting the outstanding principal balance of each Purchased Note as of the date of such purchase.

On October 25, 1996, the Trustee paid the Plan a total of $618,391.05, representing (i) the aggregate outstanding principal balances on the Purchased Notes at the time of the transaction, plus (ii) the purchase price for the Interest (*i.e.,* the Plan's 71% interest in the Oakland Property), plus (iii) $56.041.80 to reimburse the Plan for its loss on the sale of the Grass Valley Property to an unrelated party. The Trustee represents that the Plan paid no commissions or fees with respect to these transactions.

In addition to the Trustees' repayment of the principal amount of the investment losses resulting to the Plan from the default of four Notes and foreclosure on the remaining two Notes, the Trustee now proposes to pay all of the accrued but unpaid interest (i.e., the Accrued Interest Payment) that was due to the Plan on the Notes as of October 25, 1996. The Trustee has also agreed to pay the Plan a reasonable rate of interest on the amount represented by the Accrued Interest Payment (i.e., the Additional Interest Payment) for the period from October 25, 1996, until the date the Accrued Interest Payment is paid to the Plan. The interest rate for the Additional Interest Payment will be determined by the U.S. Treasury rate for 3-month Treasury Bills, which the Trustee has determined is an appropriate third party rate and source for such amount.

The applicant represents that the Accrued Interest Payment will be approximately $181,581. Further, the Additional Interest Payment would have been approximately $35,699, as of July 31, 2000. Thus, the total additional payments that the Trustee proposes to pay to the Plan was approximately $217,280, as of July 31, 2000.

5. The Trustee represents that the past transactions were in the best interests of the Plan because they enabled the Plan to dispose of non-productive assets under terms which were better than the Plan could have obtained in arm's-length transactions with unrelated parties. The Trustee maintains that if it had not purchased the Interest and the Purchased Notes from the Plan, the Plan either would have continued to hold these non-productive assets or would have sold these assets to unrelated parties and incurred a substantial loss on the investments. The Trustee represents that the past transactions

[16] The Department expresses no opinion in this proposed exemption as to whether the Plan's acquisition and holding of the Notes and the Properties violated any of the fiduciary responsibility provisions contained in Part 4 of Title I of the Act.

However, the Department notes that an investigation regarding the subject investments made by the Plan and related transactions has been conducted by the Department's Regional Office in San Francisco. In this regard, the proposed exemption, if granted, will facilitate certain agreements made by the parties to restore assets to the Plan.

were protective of the Plan because the Plan incurred no expenses related to the transactions. The Trustee states that prior to purchasing the Purchased Notes and the Interest from the Plan, it determined that these assets were unmarketable. In addition, with respect to the Interest, the Trustee represents that attempts were made over two years to sell the Oakland Property to an unrelated party without any success. Thus, the Trustee determined that any sale of the Purchased Notes and Interest (through a sale of the Oakland Property) to an unrelated party would have resulted in substantial losses to the Plan and its participants and beneficiaries.

6. The Trustee represents that all measures taken with respect to the Plan's investments in the Notes were taken in order to reimburse the Plan for actual out-of-pocket losses on the Notes. The additional measures that the Trustee now proposes to take with respect to the Accrued Interest Payments and the Additional Interest Payments are meant to restore additional assets to the Plan which relate to the Notes, including the Purchased Notes and the Interest which were sold by the Plan to the Trustee. The Trustee, as the responsible fiduciary for the Plans, will take whatever actions are necessary to protect the Plan's interest with respect to the Accrued Interest Payment and the Additional Interest Payment. The Trustee will provide the Department with documentation, within thirty (30) days of the Accrued Interest Payment and Additional Interest Payment, which verifies that the total amount of such payments have been made to the Plan. The Trustee states that, upon any sale or other disposition of any of the Purchased Notes or the Interest, in the event the Trustee receives proceeds in excess of the amount which the Trustee paid the Plan for these assets, the additional proceeds shall be promptly forwarded to the Plan.

7. In summary, the applicant represents that the transactions satisfied the criteria of section 408(a) of the Act for the following reasons:

(a) The sale of the Purchased Notes and the Interest by the Plan to the Trustee were one-time transactions for cash;

(b) The Plan received the full outstanding principal balances on the Purchased Notes, an amount which the Trustee determined to be in excess of the fair market value of such Notes at the time of the transaction;

(c) The Plan received a price for the Interest (i.e., the Plan's 71% interest in the Oakland Property) which was equal to the outstanding principal balance that had been due on the Kakos Note which had been secured by the Oakland Property, and the Trustee determined that this price represented an amount which exceeded the fair market value of the Interest at the time of the transaction;

(d) The transactions enabled the Plan to dispose of non-income-producing assets without incurring any losses on the investments or any expenses with respect to their disposition;

(e) The Plan received a full ''makewhole'' payment from the Trustee on October 25, 1996, in connection with the Plan's investment losses on the Grass Valley Property which was sold to an unrelated party on June 28, 1996;

(f) The Accrued Interest Payment to be paid by the Trustee to the Plan will represent an amount equal to the total accrued but unpaid interest that was due on the Notes on October 25, 1996;

(g) The Additional Interest Payment to be paid by the Trustee to the Plan will represent a reasonable rate of interest on the amount of the Accrued Interest Payment, as determined by the U.S. Treasury rate for 3-month Treasury Bills;

(h) The Trustee will provide the Department with documentation, within thirty (30) days of the Accrued Interest Payment and Additional Interest Payment, which verifies that the total amount of such payments have been made to the Plan;

(i) The Trustee, as the responsible fiduciary for the Plans, took appropriate actions necessary to safeguard the interests of the Plan and its participants and beneficiaries in connection with the past transactions, and will take whatever actions are necessary to continue to protect the Plan's interest with respect to the Accrued Interest Payment and the Additional Interest Payment; and

(j) Any proceeds received by the Trustee upon sale or other disposition of the Purchased Notes or the Interest in excess of the amount paid to the Plan by the Trustee for such assets shall be promptly forwarded to the Plan.

Notice to Interested Persons

The applicant will distribute (by first class mail, personal delivery or by posting in the applicant's places of business) a copy of the notice of pendency of this proposed exemption (the Notice) within fifteen (15) days of the date such Notice is published in the **Federal Register**. The Notice will be given to all interested persons, including all participants in the Plan and all employee organizations in which such participants are members.

The distribution to interested persons shall include a copy of the Notice, as published in the **Federal Register**, and a supplemental statement, as required pursuant to 29 CFR 2570.43(b)(2), which shall inform interested persons of their right to comment on and/or request a hearing with respect to the proposed exemption.

Comments and requests for a public hearing with respect to the proposed exemption are due within forty-five (45) days following the publication of the Notice in the **Federal Register**.

FOR FURTHER INFORMATION CONTACT: Khalif I. Ford of the Department, telephone (202) 219–8881. (This is not a toll-free number.)

General Information

The attention of interested persons is directed to the following:

(1) The fact that a transaction is the subject of an exemption under section 408(a) of the Act and/or section 4975(c)(2) of the Code does not relieve a fiduciary or other party in interest or disqualified person from certain other provisions of the Act and/or the Code, including any prohibited transaction provisions to which the exemption does not apply and the general fiduciary responsibility provisions of section 404 of the Act, which, among other things, require a fiduciary to discharge his duties respecting the plan solely in the interest of the participants and beneficiaries of the plan and in a prudent fashion in accordance with section 404(a)(1)(b) of the Act; nor does it affect the requirement of section 401(a) of the Code that the plan must operate for the exclusive benefit of the employees of the employer maintaining the plan and their beneficiaries;

(2) Before an exemption may be granted under section 408(a) of the Act and/or section 4975(c)(2) of the Code, the Department must find that the exemption is administratively feasible, in the interests of the plan and of its participants and beneficiaries, and protective of the rights of participants and beneficiaries of the plan;

(3) The proposed exemptions, if granted, will be supplemental to, and not in derogation of, any other provisions of the Act and/or the Code, including statutory or administrative exemptions and transitional rules. Furthermore, the fact that a transaction is subject to an administrative or statutory exemption is not dispositive of whether the transaction is in fact a prohibited transaction; and

(4) The proposed exemptions, if granted, will be subject to the express condition that the material facts and representations contained in each

application are true and complete, and that each application accurately describes all material terms of the transaction which is the subject of the exemption.

Signed at Washington, DC, this 13th day of October, 2000.

Ivan Strasfeld,

Director of Exemption Determinations, Pension and Welfare Benefits, Administration, U.S. Department of Labor.

[FR Doc. 00–26789 Filed 10–18–00; 8:45 am]

BILLING CODE 4510–29–P

NATIONAL AERONAUTICS AND SPACE ADMINISTRATION

[Notice 00–126]

NASA Advisory Council (NAC), Aero-Space Technology Advisory Committee (ASTAC); Meeting

AGENCY: National Aeronautics and Space Administration.

ACTION: Notice of meeting.

SUMMARY: In accordance with the Federal Advisory Committee Act, Pub. L. 92–463, as amended, the National Aeronautics and Space Administration announces a forthcoming meeting of the NASA Advisory Council, Aero-Space Technology Advisory Committee.

DATES: Tuesday, November 28, 2000, 8:30 a.m. to 5:00 p.m.; and Wednesday, November 29, 2000, 8 a.m. to 12:00 Noon.

ADDRESSES: National Aeronautics and Space Administration Room 6H46, 300 E Street, SW., Washington, DC 20546.

FOR FURTHER INFORMATION CONTACT: Ms. Mary-Ellen McGrath, Office of Aerospace Technology, National Aeronautics and Space Administration, Washington, DC 20546 (202/358–4729).

SUPPLEMENTARY INFORMATION: The meeting will be open to the public up to the seating capacity of the room. The agenda for the meeting is as follows:

—Status of Aerospace Technology Programs
—Small Aircraft Transportation System (SATs) Report
—Status of Icing Workshop
—2nd, 3rd, and 4th Generation Reusable Launch Vehicles (RLVs)
—Government Performance Results Act (GPRA) Briefings
—Research Test Pilot Issues and Concerns
—Subcommittee Reports

It is imperative that the meeting be held on these dates to accommodate the scheduling priorities of the key participants.

Dated: October 16, 2000.

Beth M. McCormick,

Advisory Committee Management Officer, National Aeronautics and Space Administration.

[FR Doc. 00–26930 Filed 10–18–00; 8:45 am]

BILLING CODE 7510–01–P

NATIONAL AERONAUTICS AND SPACE ADMINISTRATION

[Notice 00–127]

NASA Advisory Council, Space Flight Advisory Committee (SFAC); Meeting

AGENCY: National Aeronautics and Space Administration.

ACTION: Notice of meeting.

SUMMARY: In accordance with the Federal Advisory Committee Act, Pub. L. 92–463, as amended, the National Aeronautics and Space Administration announces a meeting of the NASA Advisory Council, Space Flight Advisory Committee.

DATES: Monday, November 6, 2000 from 8 a.m. until 5:30 p.m. and on Tuesday, November 7, 2000 from 8 a.m. until 3:30 p.m.

ADDRESSES: Kennedy Space Center Visitor Complex, Atlas Room, Kennedy Space Center, FL 32899.

FOR FURTHER INFORMATION CONTACT: Ms. Susan Y. Edgington (Stacey), Code M, National Aeronautics and Space Administration, Washington, DC 20546, 202/358–4519.

SUPPLEMENTARY INFORMATION: The meeting will be open to the public up to seating capacity of the room. The agenda for the meeting is as follows:

—Overview, status and metrics for Office of Space Flight programs.
—Shuttle upgrades discussion.
—International Space Station commercialization

It is imperative that the meeting be held on this date to accommodate the scheduling priorities of the key participants. Visitors will be requested to sign a visitor's register.

Dated: October 16, 2000.

Beth M. McCormick,

Advisory Committee Management Officer, National Aeronautics and Space Administration.

[FR Doc. 00–26931 Filed 10–18–00; 8:45 am]

BILLING CODE 7510–01–P

NUCLEAR REGULATORY COMMISSION

[Docket No. 72–1]

General Electric Company, Morris Operation; Notice of Docketing, Notice of Consideration of Issuance, and Notice of Opportunity for a Hearing for the Renewal of Materials License SNM–2500 for the Morris Operation Independent Spent Fuel Storage Installation

The Nuclear Regulatory Commission (NRC or Commission) is considering a renewal application dated May 22, 2000, of a materials license under the provisions of 10 CFR Part 72, from General Electric Company (GE) for renewal of its Morris Operation independent spent fuel storage installation (ISFSI) license (SNM–2500). GE has owned and operated Morris Operations since its construction under Atomic Energy Commission Provisional Construction Permit No. CPCSF–3 issued in December 1967, as a spent fuel reprocessing facility, and specifically as an ISFSI for the last 18 years under the current NRC License SNM–2500. This application was docketed under 10 CFR Part 72; the ISFSI Docket No. is 72–1 and will remain the same for this action. The GE Morris Operation is located in Gooselake Township, Grundy County, Morris, Illinois, near the confluence of the Kankakee and Des Plaines Rivers. If granted, the license will authorize the applicant to continue to store spent fuel in a wet storage facility for a term of twenty (20) years.

Prior to issuance of the requested license renewal, the NRC will have made the findings required by the Atomic Energy Act of 1954, as amended (the Act), and the NRC's rules and regulations. The issuance of the materials license will not be approved until the NRC has reviewed the application and has concluded that renewal of the license will not be inimical to the common defense and security and will not constitute an unreasonable risk to the health and safety of the public. The NRC will complete an environmental evaluation, in accordance with 10 CFR Part 51, to determine if the preparation of an environmental impact statement is warranted or if an environmental assessment and finding of no significant impact are appropriate. This action will be the subject of a subsequent notice in the **Federal Register**. Pursuant to 10 CFR 2.105, by November 20, 2000, the applicant may file a request for a hearing; and any person whose interest may be affected by this proceeding and who wishes to participate as a party in

the proceeding must file a written request for a hearing and a petition for leave to intervene with respect to the subject materials license in accordance with the provisions of 10 CFR 2.714. If a request for hearing or petition for leave to intervene is filed by the above date, the NRC or an Atomic Safety and Licensing Board designated by the Commission or by the Chairman of the Atomic Safety and Licensing Board Panel will rule on the request and/or petition, and the Secretary or the designated Atomic Safety and Licensing Board will issue a notice of hearing or an appropriate order. In the event that no request for hearing or petition for leave to intervene is filed by the above date, the NRC may, upon satisfactory completion of all required evaluations, issue the materials license renewal without further prior notice.

A petition for leave to intervene shall set forth with particularity the interest of the petitioner in the proceeding and how that interest may be affected by the results of the proceeding. The petition should specifically explain the reasons why intervention should be permitted with particular reference to the following factors: (1) The nature of the petitioner's right under the Act to be made a party to the proceeding; (2) the nature and extent of the petitioner's property, financial, or other interest in the proceeding; and (3) the possible effect of any order that may be entered in the proceeding on the petitioner's interest. The petition should also identify the specific aspect(s) of the subject matter of the proceeding as to which the petitioner wishes to intervene. Any person who has filed a petition for leave to intervene or who has been admitted as a party may amend a petition, without requesting leave of the Board up to 15 days prior to the holding of the first pre-hearing conference scheduled in the proceeding, but such an amended petition must satisfy the specificity requirements described above.

Not later than fifteen (15) days prior to the first pre-hearing conference scheduled in the proceeding, a petitioner shall file a supplement to the petition to intervene which must include a list of contentions which are sought to be litigated in the matter. Each contention must consist of a specific statement of the issue of law or fact to be raised or controverted. In addition, the petitioner shall provide a brief explanation of the bases of the contention and a concise statement of the alleged facts or expert opinion which support the contention and on which the petitioner intends to rely in proving the contention at the hearing. The petitioner must also provide references to those specific sources and documents of which the petitioner is aware and on which the petitioner intends to rely to establish those facts or expert opinion. Petitioner must provide sufficient information to show that a genuine dispute exists with the applicant on a material issue of law or fact. Contentions shall be limited to matters within the scope of the action under consideration. The contention must be one which, if proven, would entitle the petitioner to relief. A petitioner who fails to file such a supplement which satisfies these requirements with respect to at least one contention will not be permitted to participate as a party.

Those permitted to intervene become parties to the proceeding, subject to any limitations in the order granting leave to intervene, and have the opportunity to participate fully in the conduct of the hearing.

A request for a hearing or petition for leave to intervene must be filed with the Secretary of the Commission, U.S. Nuclear Regulatory Commission, Washington, DC 20555, Attention: Document Control Desk or may be delivered to the Commission's Public Document Room, One White Flint North Building, 11555 Rockville Pike, Rockville, MD, by the above date. Where petitions are filed during the last ten (10) days of the notice period, it is requested that the petitioner promptly so inform the NRC by a toll-free telephone (800–368–5642 Extension 415–8500) call to E. William Brach, Director, Spent Fuel Project Office, Office of Nuclear Material Safety and Safeguards, with the following message: petitioner's name and telephone number; date petition was mailed; plant name; and publication date and page number of this **Federal Register** notice. A copy of the petition should also be sent to the Office of the General Counsel, U.S. Nuclear Regulatory Commission, Washington, DC 20555, and to Mr. James E. Ellis, Manager, Morris Operations, General Electric Company, 7555 East Collins Road, Morris, IL 60540, for the applicant.

Non-timely filings of petitions for leave to intervene, amended petitions, supplemental petitions, and/or requests for hearing will not be entertained absent a determination by the Commission, the presiding Officer, or the presiding Atomic Safety and Licensing Board that the petition and/or request should be granted based upon a balancing of the factors specified in 10 CFR 2.714(a)(1)(i)–(v) and 2.714(d).

For further details with respect to this application, see the application dated May 22, 2000, which is available for public inspection at the Commission's Public Document Room, One White Flint North Building, 11555 Rockville Pike, Rockville, MD or from the publicly available records component of NRC's document system (ADAMS). ADAMS is accessible from the NRC Web site at *http://www.nrc.gov/NRC/ADAMS/index.html* (the Public Electronic Reading Room).

Dated at Rockville, Maryland, this 11th day of October 2000.

For the Nuclear Regulatory Commission.

E. William Brach,

Director, Spent Fuel Project Office, Office of Nuclear Material Safety and Safeguards.

[FR Doc. 00–26885 Filed 10–18–00; 8:45 am]

BILLING CODE 7590–01–P

NUCLEAR REGULATORY COMMISSION

[Docket No. 70–1257]

Siemens Power Corporation; Notice of Consideration of Request for Consent To Transfer of Facility License and Conforming Amendment and Opportunity for Hearing

AGENCY: Nuclear Regulatory Commission.

ACTION: Notice of consideration of request for consent to transfer of facility license and conforming amendment and opportunity for hearing.

SUMMARY: The Nuclear Regulatory Commission (the Commission) is considering the issuance of a letter of consent and an amendment pursuant to Part 70 to Title 10 of the Code of Federal Regulations approving the transfer of Materials License SNM–1227 held by Siemens Power Corporation (''SPC'') as the owner and responsible licensee. The facility is authorized to use Special Nuclear Material (SNM) for the fabrication of nuclear fuel pellets and fuel assemblies and operates in Richland, WA. The transfer would be from Siemens Power Corporation to a new company to be named Framatome ANP Richland Division, Inc.

FOR FURTHER INFORMATION CONTACT: Dan E. Martin, Project Manager, Fuel Cycle Licensing Branch, Division of Fuel Cycle and Safeguards, Office of Nuclear Material Safety and Safeguards, U.S. Nuclear Regulatory Commission, Washington, DC 20555, telephone: (301) 415–7254, e-mail dem1@nrc.gov.

SUPPLEMENTARY INFORMATION: The Nuclear Regulatory Commission (the Commission) is considering the issuance of a letter of consent and an amendment pursuant to Part 70 to Title

10 of the Code of Federal Regulations approving the transfer of Materials License SNM–1227, held by Siemens Power Corporation (''SPC'') as the owner and responsible licensee, to a new company to be named Framatome ANP Richland Division, Inc. The facility is authorized to use Special Nuclear Material (SNM) for the fabrication of nuclear fuel pellets and fuel assemblies and operates in Richland, WA.

The transfer is necessitated by the planned merger of the world-wide nuclear business of Siemens AG, a German Aktiengesellschaft (''Siemens''), including the outstanding shares of stock of SPC, the entity that currently conducts the U.S. nuclear business of Siemens, with the world-wide nuclear business of Framatome S.A., a French societe anoyme (''Framatome'') and the creation of a new French company, Framatome Advanced Nuclear Power (''Framatome ANP''). Upon closing of the transaction, SPC will be a wholly-owned subsidiary of Framatome Technologies Group, Inc. (''FTG''), a Delaware corporation and a wholly-owned indirect subsidiary of Framatome ANP, and will operate under the name Framatome ANP Richland Division, Inc. (''Framatome ANP Richland''). Before the closing date of the transaction, FTG will change its name to Framatome ANP, Inc., but FTG is used herein for convenience. The Commission is considering SPC's application and request, dated September 29, 2000, for Commission consent to the transfer of Materials License SNM–1227 to Framatome ANP Richland and the change in ownership of SPC from Siemens Corporation to FTG, effective upon the closing of the transaction, and a license amendment for administrative purposes to reflect the proposed transfer.

According to SPC's application dated September 29, 2000, there will be no changes affecting the existing health and safety programs, qualifications of safety personnel, equipment and facilities, or any other existing license requirements. All the present obligations of SPC under the current license will pass unchanged to Framatome ANP Richland, with the exception of the form of financial assurance for decommissioning. SPC's application includes an unexecuted letter of credit and a standby third-party trust agreement, and a commitment to provide fully executed documents before the closing date.

The proposed license amendment would change the name of the licensee from Siemens Power Corporation to Framatome ANP Richland Division, Inc. for administrative purposes to reflect the proposed transfer.

Pursuant to 10 CFR 70.36, no license granted under the regulations in Part 70 and no right to possess or utilize special nuclear material granted by any license issued pursuant to the regulations in Part 70 shall be transferred, assigned or in any manner disposed of, either voluntarily or involuntarily, directly or indirectly, through transfer of control of any license to any person unless the Commission gives its prior consent in writing. The Commission will approve an application for the transfer of a license if the Commission determines that the proposed transferee is qualified to hold the license, and that the transfer is otherwise consistent with applicable provisions of law, regulations, and orders issued by the Commission pursuant thereto.

Before issuance of the proposed conforming license amendment, the Commission will make the findings required by the Atomic Energy Act of 1954, as amended (the Act), and the Commission's regulations.

The filing of requests for hearing and petitions for leave to intervene, and written comments with regard to the license transfer application, are discussed below.

By November 7, 2000, any person whose interest may be affected by the Commission's action on the application may request a hearing and, if not, the applicant may petition for leave to intervene in a hearing proceeding on the Commission's action. Requests for a hearing and petitions for leave to intervene should be filed in accordance with the Commission's rules of practice set forth in subpart M, ''Public Notification, Availability of Documents and Records, Hearing Requests and Procedures for Hearings on License Transfer Applications,'' of 10 CFR part 2. In particular, such requests and petitions must comply with the requirements set forth in 10 CFR 2.1306, and should address the considerations contained in 10 CFR 2.1308(a). Untimely requests and petitions may be denied, as provided in 10 CFR 2.1308(b), unless good cause for failure to file on time is established. In addition, an untimely request or petition should address the factors that the Commission will also consider, in reviewing untimely requests or petitions, set forth in 10 CFR 2.1308(b)(1)–(2).

Requests for a hearing and petitions for leave to intervene should be served upon: Mr. Loren J. Maas, Manager, Regulatory Compliance, Siemens Power Corporation, 2101 Horn Rapids Road, Richland, WA 99352; the General Counsel, U.S. Nuclear Regulatory Commission, Washington, DC 20555 (e-mail address for filings regarding license transfer cases only: *OGCLT@NRC.gov);* and the Secretary of the Commission, U.S. Nuclear Regulatory Commission, Washington, DC 20555–0001, Attention: Rulemakings and Adjudications Staff, in accordance with 10 CFR 2.1313.

The Commission will issue a notice or order granting or denying a hearing request or intervention petition, designating the issues for any hearing that will be held and designating the Presiding Officer. A Notice granting a hearing will be published in the **Federal Register** and served on the parties to the hearing.

As an alternative to requests for hearing and petitions to intervene, by (30 days after publication), persons may submit written comments regarding the license transfer application, as provided for in 10 CFR 2.1305. The Commission will consider and, if appropriate, respond to these comments, but such comments will not otherwise constitute part of the decisional record. Comments should be submitted to the Secretary, U.S. Nuclear Regulatory Commission, Washington, DC 20555–0001, Attention: Rulemakings and Adjudications Staff, and should cite the publication date and page number of the **Federal Register** notice.

For further details with respect to this action, see the application dated September 29, 2000, available for public inspection at the Commission's Public Document Room at One White Flint North, 11555 Rockville Pike, Rockville, MD, and accessible electronically through the ADAMS Public Electronic Reading Room link at the NRC Web site *(http://www.nrc.gov).*

Dated at Rockville, Maryland this 13th day of October, 2000.

For the Nuclear Regulatory Commission.

Philip Ting,

Chief, Fuel Cycle Licensing Branch, Division of Fuel Cycle Safety and Safeguards, Office of Nuclear Material Safety and Safeguards.

[FR Doc. 00–26887 Filed 10–18–00; 8:45 am]

BILLING CODE 7590–01–P

NUCLEAR REGULATORY COMMISSION

Notice of Issuance of Amendment to Materials License SNM–2501

[Docket No. 72–2]

Virginia Electric and Power Company Surry Independent Spent Fuel Storage Installation

The U.S. Nuclear Regulatory Commission (NRC or the Commission) has issued Amendment 12 to Materials License SNM–2501 held by Virginia

Electric and Power Company (Virginia Power) for the receipt, possession, transfer, and storage of spent fuel at the Surry Independent Spent Fuel Storage Installation (ISFSI), located in Surry County, Virginia. The amendment is effective as of the date of issuance.

By application dated November 15, 1999, as supplemented on May 26, August 7, and August 14, 2000, Virginia Power requested to amend its ISFSI license to permit the use of the TN–32 dry storage cask to store spent fuel with a higher initial enrichment and burnup than currently specified in the Technical Specifications for the Surry ISFSI. This amendment complies with the standards and requirements of the Atomic Energy Act of 1954, as amended (the Act), and the Commission's rules and regulations. The Commission has made appropriate findings as required by the Act and the Commission's rules and regulations in 10 CFR Chapter I, which are set forth in the license amendment.

In accordance with 10 CFR 72.46(b)(2), a determination has been made that the amendment does not present a genuine issue as to whether public health and safety will be significantly affected. Therefore, the publication of a notice of proposed action and an opportunity for hearing or a notice of hearing is not warranted. Notice is hereby given of the right of interested persons to request a hearing on whether the action should be rescinded or modified.

Also in connection with this action, the Commission prepared an Environmental Assessment (EA) and Finding of No Significant Impact (FONSI). The EA and FONSI were published in the **Federal Register** on September 22, 2000 (65 *FR* 57407).

In accordance with 10 CFR 2.790 of the NRC's ''Rules of Practice,'' a copy of this letter and its enclosure will be available electronically for public inspection in the NRC Public Document Room or from the Publicly Available Records (PARS) component of NRC's document system (ADAMS). ADAMS is accessible from the NRC Web site at *http://www.nrc.gov/NRC/ADAMS/index.html* (the Public Electronic Reading Room).

Dated at Rockville, Maryland, this 6th day of October 2000.

For the Nuclear Regulatory Commission.

E. William Brach,

Director, Spent Fuel Project Office, Office of Nuclear Material Safety and Safeguards.

[FR Doc. 00–26886 Filed 10–18–00; 8:45 am]

BILLING CODE 7590–01–P

NUCLEAR REGULATORY COMMISSION

Twenty-Eighth Water Reactor Safety Meeting

AGENCY: Nuclear Regulatory Commission.

ACTION: Notice of meeting.

SUMMARY: The Twenty-Eighth Water Reactor Safety Meeting (WRSM) will be held on October 23–25, 2000, 8 a.m.–5:30 p.m. at the Bethesda Marriott Hotel, 5151 Pooks Hill Road, Bethesda, Maryland.

Ashok C. Thadani, Director, Office of Nuclear Regulatory Research, will open the Water Reactor Safety Meeting on Monday, October 23, 2000, with NRC Chairman Richard Meserve, the keynote speaker.

An expert panel recognizing the 25th anniversary of the Reactor Safety Study (WASH–1400) and a discussion of the lessons learned will follow Chairman Meserve. Panel members include George Apostolakis, Massachusetts Institute of Technology; Adolf Birkhofer, Scientific Director, Gesellschaft fur Analagen-und Reaktorsicherheit (GRS) mbH; Robert Budnitz, Future Resources Associates; Richard Denning, Battelle Columbus Laboratories; B. John Garrick, Chairman, NRC Advisory Committee on Nuclear Waste; Harold Lewis, University of California Santa Barbara; and Ashok Thadani and Joseph Murphy, NRC.

The Massachusetts Institute of Technology will host a luncheon featuring guest speaker Dr. John F. Ahearne, former NRC Chairman, in celebration of the 25th anniversary of the release of the Reactor Safety Study and to honor Professor Norman Rasmussen and Saul Levine.

Commissioner Nils J. Diaz will be a guest speaker in the afternoon followed by an expert panel addressing the future challenges for risk-informed regulation. Panel members will include David Lochbaum, Union of Concerned Scientists; Dana Powers, Chairman, NRC Advisory Committee on Reactor Safeguards; Brian Sheron, Associate Director for Project Licensing and Technical Analysis, NRC Office of Nuclear Reactor Regulation; Margaret Federline, Deputy Director, NRC Office of Nuclear Regulatory Research. Dr. William Travers, NRC Executive Director for Operations, will serve as moderator for this panel. Technical sessions will be held for the remainder of the afternoon.

Commissioner Greta J. Dicus will be a guest speaker at 8:30 a.m. on Tuesday, October 24, 2000, followed by three technical sessions that will last until noon. Elsevier Science, on behalf of the Journal of Nuclear Engineering Design, will host a luncheon to mark Professor Karl Kussmaul's role as Principal Editor. Dana Powers, Chairman, NRC Advisory Committee on Reactor Safeguards, will also be a guest speaker. Technical sessions will follow the luncheon and will be held for the remainder of the afternoon.

On Wednesday, October 25, 2000, at 8:30 a.m., Commissioner Jeffrey S. Merrifield will be a guest speaker, followed by an expert panel to address the future role of nuclear power and the need for nuclear regulatory research. Panel members will include Joe Colvin, President and Chief Executive Officer, Nuclear Energy Institute; Theodore Marston, Vice President and Chief Nuclear Officer, Electric Power Research Institute; Robert Budnitz, Future Resources Associates; David Lochbaum, Union of Concerned Scientists; and Kenneth Mossman, Director, Office of Radiation Safety, Arizona State University. Commissioner Edward McGaffigan will moderate this panel.

Two technical sessions and a rapporteur panel summarizing the discussions of the individual sessions will close out the meeting.

This meeting is international in scope and includes presentations by personnel from the NRC, U.S. Government, DOE national laboratories, private contractors, universities, reactor vendors, and a number of foreign organizations.

The preliminary agenda includes eight technical sessions, which will address risk-informed regulation; dry cask storage and transportation of spent nuclear fuel; high burnup fuel; PWR sump blockage and containment coatings service level 1 safety concerns; digital instrumentation and control; thermal hydraulic and severe accident analysis for reactors and spent fuel; integrity of the reactor coolant pressure boundary; reactor decommissioning; and regulatory effectiveness.

Those who wish to attend are encouraged to register in advance on the WRSM website (*www.wrsm.bnl.gov*) or by contacting Susan Monteleone, Brookhaven National Laboratory, Department of Nuclear Energy, Building 130, Upton, NY 11973, telephone (631) 344–7235; or Sandra Nesmith (301) 415–6437, Office of Nuclear Regulatory Research, U.S. Nuclear Regulatory Commission, Washington, DC 20555.

Dated at Rockville, Maryland, this 12th day of October 2000.

For the Nuclear Regulatory Commission.

Clare Kasputys,

Deputy Director, Program Management, Policy Development & Analysis Staff, Office of Nuclear Regulatory Research.

[FR Doc. 00–26884 Filed 10–18–00; 8:45 am]

BILLING CODE 7590–01–P

SECURITIES AND EXCHANGE COMMISSION

[Release No. 35–27247]

Filings Under the Public Utility Holding Company Act of 1935, as Amended (''Act'')

October 12, 2000.

Notice is hereby given that the following filing(s) has/have been made with the Commission pursuant to provisions of the Act and rules promulgated under the Act. All interested persons are referred to the application(s) and/or declaration(s) for complete statements of the proposed transaction(s) summarized below. The application(s) and/or declaration(s) and any amendment(s) is/are available for public inspection through the Commission's Branch of Public Reference.

Interested persons wishing to comment or request a hearing on the application(s) and/or declaration(s) should submit their views in writing by November 6, 2000, to the Secretary, Securities and Exchange Commission, Washington, DC 20549–0609, and serve a copy on the relevant applicant(s) and/or declarant(s) at the address(es) specified below. Proof of service (by affidavit or, in the case of an attorney at law, by certificate) should be filed with the request. Any request for hearing should identify specifically the issues of facts or law that are disputed. A person who so requests will be notified of any hearing, if ordered, and will receive a copy of any notice or order issued in the matter. After November 6, 2000, the application(s) and/or declaration(s), as filed or as amended, may be granted and/or permitted to become effective.

PowerGen US Holdings Limited, et al., (70–0763)

PowerGen US Holdings Limited (''US Holdings'') and PowerGen UK plc (''PGUK'' and together, ''Applicants''), both subsidiaries of PowerGen plc (''PowerGen''), a public limited company organized under the laws of England and Wales, all located at 53 New Broad Street, London EC2M 1SL, United Kingdom, have filed a declaration under sections 6(a), 7 and 12(b) of the Act and rules 45 and 54 under the Act.

In a separate application-declaration in file number 70–9761 (''9671 Application''), PowerGen proposed to acquire LG&E Energy Corp. (''LG&E Energy''), a utility holding company exempt by order [1] under section 3(a) from all provisions of the Act, except section 9(a), and all of LG&E Energy's subsidiaries (together ''LG&E Energy Group'') (''Merger''). In the 9671 Application, PowerGen has stated that intermediate companies will be used in the chain of ownership of the LG&E Energy Group (''Intermediate Companies''), including US Holdings, primarily for the purpose of creating an economically efficient and viable structure for the Merger and the ongoing operations of PowerGen and the LG&E Energy Group. Following consummation of the Merger, PowerGen and each of the Intermediate Companies intend to register under section 5 of the Act as public utility holding companies.

PowerGen presently intends to finance the acquisition of the LG&E Energy Group from, among other things, borrowings under a fully committed bank facility that PowerGen and US Holdings established on February 27, 2000 (''Credit Facility''). The credit Facility provides for up to $4 billion in borrowings by PowerGen, US Holdings and other wholly owned subsidiaries of US Holdings as approved in writing by the banks. Applicants intend for US Holdings to be the only borrower under the Credit Facility, with a guarantee from PowerGen. The Credit Facility was established both to fund the acquisition and, if necessary, to provide funding and accommodate working capital needs of the Intermediate Companies and the LG&E Energy Group.

Applicants state that PowerGen intends to reduce indebtedness under the Credit Facility by, among other things, application of available cash or the proceeds of asset sales by PGUK and its subsidiaries, or by the issuance of debt securities or other instruments by PowerGen or its subsidiaries prior to, at or after the Merger. The Credit Facility agreement generally requires that at least 50% of the proceeds from those sales in excess of $100 million be applied to repay amounts owing under the Credit Facility.

Applicants state that, due to a United Kingdom law restricting dividend payments, the use of loans from PGUK to US Holdings is the most efficient and fastest way to move excess funds from PGUK to US Holdings. Accordingly, Applicants propose for PGUK, or an intermediate parent company of PGUK that PowerGen intends to establish over PGUK, PowerGen Group Holdings (''UK Holdings''), to lend to US Holdings the net proceeds of asset disposals and other excess capital at PGUK. US Holdings will use the loans to repay amounts owed under the Credit Facility or, to the extent permitted by the Credit Facility, for other corporate purposes.

Loans by PGUK, or UK Holdings, to US Holdings will be either (a) interest free, in the case of loans of funds consisting of the proceeds of asset sales or (b) equal to the lender's cost of capital, if the funds lent to US Holdings were obtained from borrowings from a third-party. In addition, the loans to US Holdings will mature in 50 years and will have no amortization obligations.

Applicants state that to the extent that the funds from the loans are used to pay down the amounts owing under the Credit Facility, the amount of these funds will not count towards the long-term debt financing limitation proposed in the 9671 Application. If loan proceeds are not used to pay down the amounts owing under the Credit Facility, the amount of these proceeds will count towards the long-term debt limitation.

For the Commission by the Division of Investment Management, under delegated authority.

Jonathan G. Katz,

Secretary.

[FR Doc. 00–26799 Filed 10–18–00; 8:45 am]

BILLING CODE 8010–01–M

[1] *See LG&E Energy Corp.,* Holding Co. Act Release No. 26886 (Apr. 30, 1998).

SECURITIES AND EXCHANGE COMMISSION

[Investment Company Act Release No. 24687; 812–12158]

American Water Capital Corp.; Notice of Application

October 12, 2000.

AGENCY: Securities and Exchange Commission (''SEC or Commission'').

ACTION: Notice of an application under section 6(c) of the Investment Company Act of 1940 (the ''Act'') granting an exemption from all provisions of the Act.

SUMMARY OF THE APPLICATION: Applicant seeks an order exempting it from all provisions of the Act in connection with the offer and sale of applicant's securities to raise funds for the business operations of its parent and certain subsidiaries thereof.

Filing Dates: The application was filed on June 30, 2000 and amended on October 5, 2000.

Hearing or Notification of Hearing: An order granting the application will be

issued unless the SEC orders a hearing. Interested persons may request a hearing by writing to the SEC's Secretary and serving applicant with a copy of the request, personally or by mail. Hearing requests should be received by the SEC by 5:30 p.m. on November 6, 2000, and should be accompanied by proof of service on applicant, in the form of an affidavit or, for lawyers, a certificate of service. Hearing requests should state the nature of the writer's interest, the reason for the request, and the issues contested. Persons who wish to be notified of a hearing may request notification by writing to the SEC's Secretary.

ADDRESS: Secretary, SEC, 450 Fifth Street, NW., Washington, DC 20549–0609. Applicant, 1025 Laurel Oak Road, Voorhees, NJ 08043.

FOR FURTHER INFORMATION CONTACT: Marilyn Mann, Senior Counsel, at (202) 942–0582, or Nadya B. Roytblat, Assistant Director, at (202) 942–0564, (Division of Investment Management, Office of Investment Company Regulation).

SUPPLEMENTARY INFORMATION: The following is a summary of the application. The complete application may be obtained for a fee at the SEC's Public Reference Branch, 450 Fifth Street, NW., Washington, DC 20549–0102 (tel. 202–942–8090).

Applicant's Representations

1. Applicant is a Delaware corporation and a wholly-owned finance subsidiary of American Water Works Company, Inc. (''AWW''). AWW, a Delaware corporation, is a public utility holding company exempt from the Public Utility Holding Company Act of 1940. The core business of AWW is the ownership of common stock of utility companies providing water service. AWW's 25 utility subsidiaries provide water and/or wastewater service to approximately nine million people in 22 states. With the exception of the Michigan-American Water Company, the utility companies function under economic regulations prescribed by state regulatory commissions. In addition to its regulated utility subsidiaries, some subsidiaries of AWW engage in non-regulated businesses. However, only AWW, the regulated utility subsidiaries and entities wholly-controlled by these regulated utility subsidiaries borrow from Applicant. The term ''Subsidiaries'' as used in the application means the water and wastewater utility subsidiaries and entities wholly-owned directly or indirectly by such utilities.

2. Applicant's primary function will be to lend funds to AWW and its Subsidiaries and provide cash management through cash sweeps and management of excess cash. Applicant will obtain its funds primarily by borrowing from two sources: (i) it will arrange for a syndicated bank credit line to provide short-term loans with a maturity of one year or less; and (ii) it will register its own debt securities for sale to the public by filing a shelf registration of these securities with the Commission. Applicant is also considering instituting a commercial paper program in combination with the syndicated bank credit line. Applicant will invest in or lend at least 85% of the cash or cash equivalents raised by it through offerings of debt securities to AWW and the Subsidiaries as soon as practicable, and in no event later than six months, after its receipt of such cash or cash equivalents.

3. Applicant will comply with all of the provisions of rule 3a–5 under the Act, discussed below, except that AWW will not directly guarantee the debt securities issued by Applicant. Instead of an unconditional guarantee, AWW will use a support agreement (''Support Agreement'') that will be the functional equivalent of an unconditional guarantee.

4. Because applicant's securities are not beneficially owned by more than 100 persons and applicant is not making and does not propose to make a public offering of its securities, applicant is not an ''investment company'' by virtue of the exemption contained in section 3(c)(1) of the Act. Applicant is applying for an exemption because it may in the future engage in a public offering or an offering exempt from the registration requirements of the Securities Act of 1933 (''1933 Act'') which may result in applicant's securities being beneficially held by more than 100 persons. Applicant, therefore, requests an order under section 6(c) of the Act exempting it from all provisions of the Act.

Applicant's Legal Analysis

1. Section 6(c) of the Act permits the Commission to grant an exemption from the provisions of the Act if, and to the extent that, such exemption is necessary and appropriate in the public interest, consistent with the protection of investors, and consistent with the purposes fairly intended by the policy and provisions of the Act.

2. Rule 3a–5 under the Act provides an exemption from the definition of an investment company for certain companies organized primarily to finance the business operations of their parent companies or companies controlled by their parent companies. Rule 3a–5 requires, among other things, that any debt securities issued to the public be unconditionally guaranteed by the parent company as to the payment of principal, interest, and premium. Applicant states that it meets all the requirements of rule 3a–5 except that AWW will not directly guarantee the debt securities issued by Applicant.

3. Applicant states that a state's public utility commission usually determines a Subsidiary's return on capital by considering the capital structure of the Subsidiary without regard to the capital structure of AWW. AWW has avoided interdependent financial relationships such as loans and guarantees that tend to make interdependent the capital structure of AWW and the Subsidiaries in order to maintain a capital structure that is consistent with this regulatory approach. Applicant states that AWW determined to enter into the Support Agreement in lieu of an unconditional guarantee in order to maintain this separation in capital structure between it and its Subsidiaries. Applicant believes that the Support Agreement provides a functional equivalent of an unconditional guarantee of Applicant's securities because it grants holders of Applicant's securities the right to proceed directly against AWW in the event Applicant fails to pay when due principal, interest, and premium, if any, owed by it on such securities.

Applicant's Conditions

Applicant agrees that any order granting the requested relief will be subject to the following conditions:

1. Applicant will meet all of the requirements of rule 3a–5 except for the unconditional guarantee requirement. In lieu of an unconditional guarantee, Applicant has entered into, and will keep in force (except as contemplated below), the Support Agreement, which is and shall continue to be the functional equivalent of an unconditional guarantee. The Support Agreement provides, and will continue to provide, as follows:

a. AWW owns and shall continue to own all of the outstanding voting stock of Applicant;

b. AWW will provide to Applicant funds (as capital, or if AWW and Applicant agree, as a subordinated loan) as required if Applicant is unable to make timely payment of interest, principal or premium, if any, on any debt issued by Applicant;

c. AWW will cause Applicant to have at all times a positive tangible net worth (net assets less intangible assets, if any), as determined in accordance with

generally accepted accounting principles; and

d. If Applicant fails or refuses to take timely action to enforce its rights under the Support Agreement or if Applicant defaults in the timely payment of interest, principal or premium, any lender may proceed directly against AWW to enforce Applicant's rights under the Support Agreement or to obtain payment of such defaulted interest, principal or premium.

2. The Support Agreement may be modified or amended in a manner that adversely affects the rights of creditors of Applicant only if such modification or amendment occurs after all debt securities theretofore issued by Applicant are irrevocably paid in full and all commitments to acquire Applicant's debt securities are terminated, unless all creditors consent in advance and in writing to such modification or amendment. No modification of or amendment to the Support Agreement relating to the four provisions set forth in condition 1, above, (other than to increase the required level of Applicant's positive tangible net worth) shall be made unless: (i) All creditors consent in advance and in writing to such modification or amendment and (ii) Applicant applies to the Commission for an amended order relating to such modification or amendment, and the Commission grants such amended order. The Support Agreement may be terminated only after (1) all debt securities issued by Applicant are irrevocably paid in full and all commitments to acquire Applicant's debt securities are terminated and (2) Applicant applies to the Commission for an amended order relating to such termination, and the Commission grants such amended order.

3. If Applicant initiates a non-public or public offering of securities, it will consist of short-term, intermediate-term or long-term debt securities to be offered and sold either in transactions exempt from the registration requirements of the 1933 Act or in public offerings of securities registered under the 1933 Act. No future public offering will involve voting securities of Applicant.

4. In the case of an offering of debt securities not requiring registration under the 1933 Act, Applicant will provide each offeree with disclosure materials that will include a description of the business of AWW and its subsidiaries and other data of the character customarily supplied in such offerings, or will otherwise comply with the disclosure requirements of Regulation D under the 1933 Act. In the event of a subsequent offering, these materials will be updated at the time thereof (by supplementing the disclosure materials or by incorporating by reference filings under the Securities Exchange Act of 1934) to reflect material changes in the financial condition of AWW and its subsidiaries, taken as a whole.

For the Commission, by the Division of Investment Management, pursuant to delegated authority.

Jonathan G. Katz,

Secretary.

[FR Doc. 00–26798 Filed 10–18–00; 8:45 am]

BILLING CODE 8010–01–M

SECURITIES AND EXCHANGE COMMISSION

[Rel. No. IC–24686; 812–12178]

The Latin American Investment Fund, Inc., et al.; Notice of Application

October 12, 2000.

AGENCY: Securities and Exchange Commission (''Commission'').

ACTION: Notice of application under section 17(b) of the Investment Company Act of 1940 (the ''Act'') for an exemption from section 17(a) of the Act.

SUMMARY OF APPLICATION: Applicants request an order to permit the Latin America Equity Fund, Inc. (''LAQ'') to merge into the Latin America Investment Fund, Inc. (''LAM''). Because of certain affiliations, applicants may not rely on rule 17a–8 under the Act.

Applicants: LAM, LAQ, and Credit Suisse Asset Management, LLC (''CSAM'').

Filing Dates: The application was filed on July 17, 2000 and amended on August 14, 2000 and October 12, 2000.

Hearing or Notification of Hearing: An order granting the requested relief will be issued unless the Commission orders a hearing. Interested persons may request a hearing by writing to the Commission's Secretary and serving applicants with a copy of the request, personally or by mail. Hearing requests should be received by the Commission by 5:30 p.m. on November 2, 2000 and should be accompanied by proof of service on applicants, in the form of an affidavit or, for lawyers, a certificate of service. Hearing requests should state the nature of the writer's interest, the reason for the request, and the issues contested. Persons who wish to be notified of a hearing may request notification by writing to the Commission's Secretary.

ADDRESSES: Secretary, Securities and Exchange Commission, 450 Fifth Street, NW., Washington, DC 20549–0609. Applicants, 466 Lexington Avenue, New York, New York, 10017.

FOR FURTHER INFORMATION CONTACT: Julia Kim Gilmer, Senior Counsel, at (202) 942–0528, or Michael W. Mundt, Branch Chief, at (202) 942–0564 (Division of Investment Management, Office of Investment Company Regulation).

SUPPLEMENTARY INFORMATION: The following is a summary of the application. The complete application may be obtained for a fee at the Commission's Public Reference Branch, 450 Fifth Street, NW, Washington, DC 20549–0102 (tel. 202–942–8090).

Applicants' Representations

1. LAM and LAQ (each, a ''Fund,'' and collectively, the ''Funds'') are Maryland corporations registered under the Act as closed-end management investment companies. CSAM, an indirect wholly-owned subsidiary of Credit Suisse Group, is registered as an investment adviser under the Investment Advisers Act of 1940 and serves as investment adviser to the Funds. As of June 7, 2000, the President and Fellows of Harvard College (''Harvard'') owned more than 5% of the outstanding voting securities of each of the Funds.

2. On July 24, 2000, the Board of Directors of both Funds, including the directors who are not ''interested persons,'' as defined in section 2(a)(19) of the Act (''Disinterested Directors''), unanimously approved a Merger Agreement and Plan of Reorganization (the ''Plan'') between the Funds. Under the Plan, LAQ will merge into LAM, and LAM will succeed to all of the assets and liabilities of LAQ by operation of Maryland state law (the ''Merger''). Each share of common stock of LAQ will be converted into an equivalent dollar amount of full shares of common stock of LAM, based on the net asset value per share of each Fund calculated at 4:00 p.m. on the business day preceding the effective date of the Merger. LAM will purchase any interests that would result in fractional shares at the proportionate amount of the current net asset value of the shares and remit the cash proceeds to former LAQ shareholders. The value of the assets of the Funds will be determined in accordance with the valuation procedures set forth in LAM's registration statement, which are the same as LAQ's valuation procedures. Applicants state that the application of LAM's valuation procedures to LAQ's assets and liabilities was approved by the Board of Directors of each Fund and will not result in any difference in the

valuation that would have resulted from the application of LAQ's valuation procedures. After consummation of the Merger, LAQ will terminate its registration under the Act. No sales charge or fee of any kind will be charged to LAQ shareholders in connection with their receipt of common stock of LAM in the Merger.

3. Applicants state that each Fund seeks long-term capital appreciation as its objective. LAQ seeks to meet that objective by investing primarily in Latin American equity securities, and LAM seeks to meet the same objective by investing primarily in Latin American debt and equity securities. After the Merger, LAM will adopt LAQ's investment objectives and policies.

4. The Board of Directors of each Fund, including the Disinterested Directors, determined that the Merger is in the best interest of each Fund, and that the interests of the existing shareholders of each Fund would not be diluted by the Merger. In assessing the Merger, each Board considered various factors, including: (a) The possibility that LAM would have a lower operating expense ratio than either Fund prior to the Merger; (b) the possible benefits in portfolio management with a larger asset base; (c) the terms and conditions of the Merger; (d) the compatibility of each Fund's investment objective, policies and restrictions; (e) the tax-free nature of the Merger; and (f) the anticipated expenses of the Merger. The expenses of the Merger will be allocated equally between the Funds, as determined by the Board of Directors of each Fund.

5. The Merger is subject to a number of conditions, including that: (a) The shareholders of the Funds approve the Merger; (b) LAQ declares and distributes to its shareholders all of its net investment company taxable income through dividends and substantially all of its net capital gain; (c) the Commission grants the requested exemptive relief; and (d) the Funds receive an opinion of counsel that the Merger will be tax-free. The Plan may be terminated at any time prior to the effective date of the Merger by mutual agreement of each Fund's Board of Directors or by either Fund if the other has violated a condition of the Plan. Applicants agree not to make any material changes to the Plan without prior Commission approval.

6. A registration statement on Form N–14 containing a combined proxy statement/prospectus was filed with the Commission on August 1, 2000, and was declared effective on September 1, 2000. Applicants mailed the proxy statement/prospectus to the shareholders of each Fund on or about September 7, 2000. The Plan was approved by the shareholders of each Fund at a meeting held on October 10, 2000. The Merger is expected to take place promptly after the requested relief is granted.

Applicants' Legal Analysis

1. Section 17(a) of the Act provides that it is unlawful for any affiliated person of a registered investment company, or an affiliated person of such a person, acting as principal, knowingly to sell any security to or knowingly to purchase any security from that company. Section 2(a)(3) of the Act defines an ''affiliated person'' of another person to include (a) any person directly or indirectly owning, controlling, or holding with power to vote 5% or more of the outstanding voting securities of the other person; (b) any person 5% or more of whose outstanding voting securities are directly or indirectly owned, controlled, or held with power to vote by the other person; (c) any person directly or indirectly controlling, controlled by or under common control with the other person; and (d) if the other person is an investment company, any investment adviser of that company.

2. Rule 17a–8 under the Act exempts from the prohibitions of section 17(a) mergers, consolidations, or purchases or sales of substantially all of the assets of registered investment companies that are affiliated persons, or affiliated persons of an affiliated person solely by reason of having a common investment adviser, common directors, and/or common officers, provided that certain conditions set forth in the rule are satisfied. Applicants believe that they may not rely on rule 17a–8 because Harvard owns more than 5% of the outstanding voting securities of each Fund, and therefore the Funds may be deemed affiliated persons of an affiliated person for a reason not set forth in the rule.

3. Section 17(b) of the Act provides that the Commission may exempt a transaction from the provisions of section 17(a) if the evidence establishes that the terms of the proposed transaction, including the consideration to be paid or received, are reasonable and fair and do not involve overreaching on the part of any person concerned, and that the proposed transaction is consistent with the policy of each registered investment company concerned and with the general purposes of the Act.

4. Applicants request an order under section 17(b) of the Act exempting them from section 17(a) to the extent necessary to effect the Merger. Applicants submit that the terms of the Merger satisfy the standards of section 17(b) of the Act. Applicants also state that the Board of Directors of each Fund, including the Disinterested Directors, determined that the participation of each Fund in the Merger is in the best interests of each Fund and that the interests of the existing shareholders of each Fund will not be diluted as a result of the Merger. In addition, applicants state that the Merger will be based on the Funds' relative net asset values.

For the Commission, by the Division of Investment Management, under delegated authority.

Jonathan G. Katz,

Secretary.

[FR Doc. 00–26800 Filed 10–18–00; 8:45 am]

BILLING CODE 8010–01–M

SECURITIES AND EXCHANGE COMMISSION

[Release No. IC–24688; File No. 812–11834]

American Skandia Life Assurance Corporation, et al; Notice of Application

October 13, 2000.

AGENCY: The Securities and Exchange Commission (''Commission'' or ''SEC'').

ACTION: Notice of application for an order pursuant to Section 26(b) of the Investment Company Act of 1940 (''1940 Act'') approving certain substitutions of securities, and pursuant to Sections 17(b) and 6(c) of the 1940 Act exempting related transactions from 17(a) of the 1940 Act.

SUMMARY OF APPLICATION: Applicants request an order to permit certain registered unit investment trusts to substitute shares of certain registered open-end investment companies for shares of certain registered investment companies currently held by those unit investment trusts, and to permit certain in-kind redemptions of portfolio securities in connection with the substitutions.

Applicants: American Skandia Life Assurance Corporation (''ASLAC'' or the ''Company''), American Skandia Life Assurance Corporation Variable Account B (Class 1) (''Account B–1''), American Skandia Life Assurance Corporation Variable Account B (Class 2) (''Account B–2''), American Skandia Life Assurance Corporation Variable Account B (Class 3) (''Account B–3'', together with Account B–1 and Account B–2, ''Account B''), American Skandia Variable Account F (''Account F'' and together with Account B, the ''Separate Account''), and American Skandia Marketing, Incorporated (''ASM'') (collectively, ''Applicants'').

Filing Date: The application was filed on October 27, 1999 and amended and restated on September 29, 2000.

Hearing or Notification of Hearing: An order granting the application will be issued unless the Commission orders a hearing. Interested persons may request a hearing on this application by writing to the Secretary of the Commission and serving Applicants with a copy of the request, in person or by mail. Hearing requests must be received by the Commission by 5:30 p.m. on November 3, 2000, and accompanied by proof of service on the Applicants in the form of an affidavit or, for lawyers, a certificate of service. Hearing requests should state the nature of your interest, the reason for the request, and the issues you contest. Persons may request notification of the date of a hearing by writing to the Secretary of the Commission.

ADDRESSES: Secretary, Securities and Exchange Commission, 450 5th Street, NW, Washington, DC 20549–0609. Applicants, in care of Edward P. MacDonald, Esquire, American Skandia Life Assurance Corporation, One Corporate Drive, Shelton, Connecticut 06484.

FOR FURTHER INFORMATION CONTACT: Ronald A. Holinsky, Senior Counsel or Lorna MacLeod, Branch Chief, Office of Insurance Products, Division of Investment Management, at (202) 942–0670.

SUPPLEMENTARY INFORMATION: Following is a summary of the application. The complete application is available for a fee from the Public Reference Branch of the Commission, 450 Fifth Street, NW, Washington, DC 20549–0102 (tel. (202) 942–8090).

Applicants' Representations

1. ASLAC is a stock life insurance company admitted to do business in all fifty states and in the District of Columbia. ASLAC offers a variety of fixed and variable annuity contracts to individuals and groups, as well as a modified single premium variable life insurance policy and a flexible premium variable life insurance policy to individuals (the ''Skandia Contracts'').

2. ASLAC is a wholly owned subsidiary of American Skandia Investment Holding Corporation, which is an indirect wholly-owned subsidiary of Skandia Insurance Company Ltd., a corporation organized under the laws of the Kingdom of Sweden.

3. Account B–1, registered with the Commission as a unit investment trust, is a separate account of ASLAC.

4. Account B–2, registered with the Commission as a unit investment trust, is a separate account of ASLAC.

5. Account B–3, registered with the Commission as a unit investment trust, is a separate account of ASLAC.

6. Account F, registered with the Commission as a unit investment trust, is a separate account of ASLAC.

7. ASM is registered with the Commission as a broker-dealer under the Securities Exchange Act of 1934 (''Exchange Act'') and is a member in good standing with the National Association of Securities Dealers, Inc. ASM is 100% owned by American Skandia Investment Holding Corporation, which is also the direct parent of ASLAC. ASM's primary business is that of principal distributor of variable annuities and market value adjusted fixed annuity contracts issued by ASLAC as well as variable life insurance policies issued by ASLAC. ASM is also the distributor of American Skandia Advisor Funds, Inc. a family of retail mutual funds.

8. ASLAC is the depositor of the separate accounts and offers owners of the Skandia Contracts (''Contract Owners'') a number of investment options, each of which is a division of sub-account of the separate accounts and which correspond to an underlying registered open-end management investment company. The Skandia Contracts are designed to be sold to individuals and to groups for use with retirement plans that qualify for special income tax treatment under the Internal Revenue Code of 1986, as amended (the ''Code''), and sued with retirement plans that do not qualify for such special income tax treatment.

9. The Alger American Fund is a diversified, open-end series management investment company registered under the 1940 Act. Currently it offers six portfolios, two of which are available through one or more of the Skandia Contracts offered through the separate accounts. The two portfolios offered as investments to the separate accounts are: Alger American Growth Portfolio and Alger American MidCap Growth Portfolio. Fred Alger Management, Inc. (''Fred Alger'') is the investment manager of each of the portfolios.

10. American Skandia Trust (''AST'') is a diversified, open-end series management investment company registered under the Act. AST currently is comprised of 35 portfolios. American Skandia Investment Services, Inc. (''ASISI'') is the investment manager for each of the portfolios.

11. Pursuant to ASLAC's manager-of-managers strategy, ASISI currently engages the following subadvisers to manage the accompanying AST portfolios: Janus Capital Corporation—AST JanCap Growth, AST Janus Overseas Growth, AST Janus Small-Cap Growth, and AST Janus Mid-Cap Growth; Lord Abbett & Co.—AST Lord Abbett Small Cap Value; Federated Investment Counseling—AST Federated High Yield; J.P. Morgan Investment Management, Inc.—AST Money Market; T. Rowe Price Associates, Inc.—AST T. Rowe Price Asset Allocation, AST T. Rowe Price Natural Resources and AST T. Rowe Price Small Company Value; Rowe Price-Fleming International, Inc.—AST T. Rowe Price Global Bond; Founders Asset Management, LLC—AST Founders Passport; INVESCO Funds Group, Inc.—AST INVESCO Equity Income; Pacific Investment Management Company—AST PIMCO Total Return Bond and AST PIMCO Limited Maturity Bond; Oppenheimer Funds, Inc.—AST Oppenheimer Large-Cap Growth; American Century Investment Management, Inc.—AST American Century Income & Growth, AST American Century Strategic Balanced, AST American Century International Growth, and AST American Century International Growth II; Cohen & Steers Capital Management, Inc.—AST Cohen & Steers Realty; AIM Capital Management, Inc.—AST AIM International Equity and AST AIM Balanced; Sanford C. Bernstein & Co., Inc.—AST Sanford Bernstein Managed Index 500; Marsico Capital Management, LLC—AST Marsico Capital Growth; Neuberger Berman Management Inc.—AST Neuberger Berman Mid-Cap Value and AST Neuberger Berman Mid-Cap Growth; Massachusetts Financial Services Company (''MFS'')—AST MFS Growth with Income, AST MFS Growth and AST MFS Global Equity; Scudder Kemper Investments, Inc.—AST Kemper Small-Cap Growth; and Fed Alger Management, Inc.—AST Alger All—Cap Growth.

12. ASLAC has expressly reserved the right on its own behalf and on behalf of each of the separate accounts and in the Skandia Contracts to eliminate sub-accounts, combine two or more sub-accounts, or substitute one or more new underlying funds or portfolios for others in which one or more sub-accounts are invested. The prospectus for each contract discloses this reservation.

13. ASLAC, on its own behalf and on behalf of the separate accounts, proposes to exercise its contractual right to replace shares of the Alger American Growth Portfolio with shares of the AST Alger Growth Portfolio and shares of the Alger American Mid-Cap Growth

Portfolio with shares of the AST Alger Mid-Cap Growth Portfolio. The Alger American Growth and Alger Mid-Cap Growth portfolios are referred to as the ''Old Portfolios''. The AST Alger Growth and AST Alger Mid-Cap Growth portfolios are referred to as the ''New Portfolios''. The New Portfolios will be subadvised by Fred Alger.

14. Applicants represent that the investment objective of the AST Alger Growth Portfolio is identical to that of the Alger American Growth Portfolio. Both portfolios intend to invest for long-term growth of capital appreciation. Applicants assert that the proposed substitution will result in greater administrative efficiency and enhanced oversight of the AST Alger Growth Portfolio by ASLAC while continuing to provide Contract Owners with a ''best-in-class'' money manager and substantially similar investment objective and investment policies/restrictions as the Alger Growth Portfolio. Applicants represent that the management fee of the AST Alger Growth Portfolio is identical to that of the Alger American Growth Portfolio (0.75%) and that other expenses of the AST Alger Growth Portfolio will be capped at the same level of other expenses for the Alger American Growth Portfolio (0.04%) for a period of one year following the substitution. Total annual expenses for the AST Alger Growth Portfolio will be the same as that of the Alger American Growth Portfolio (0.79%).

15. Applicants represent that the investment objective of the AST Alger Mid-Cap Growth Portfolio is identical to that of the Alger American Mid-Cap Growth Portfolio. Both portfolios seek long-term capital appreciation by investing in the equity securities of midsize companies with promising growth potential having a market capitalization within the range of companies in the S&P® Mid-Cap 400 Index. Applicants assert that the substitution will result in greater administrative efficiency and enhanced oversight of the new portfolio by ASLAC. Applicants assert that the old portfolio has experienced significant ''capitalization drift'' causing its holdings to diverge from its stated mid-cap investment objective and that ASLAC will be better able to monitor the new portfolio's direction. Applicants represent that the management fee of the AST Alger Mid-Cap Growth Portfolio is identical to that of the Alger American Mid-Cap Growth Portfolio (0.80%) and that other expenses of the AST Alger Mid-Cap Growth Portfolio will be capped at the same level of other expenses for the Alger American Mid-Cap Growth Portfolio (0.04%) for a period of one year following the substitution. Total annual expenses for the AST Alger Mid-Cap Growth Portfolio will be the same as that of the Alger American Mid-Cap Growth Portfolio (0.84%).

16. ASLAC represents that it will distribute a prospectus supplement (''Supplement'') to Contract Owners affected by the proposed Substitution notifying them of ASLAC's intention to substitute the Old Portfolios for the New Portfolios and describing the Substitutions including a brief description of the New Portfolios' investment objectives. The Supplement will explain that ASLAC has filed an application with the Commission to approve the proposed Substitutions and that from the date of the Supplement until the date of the Substitutions (''Substitution Date''), Contract Owners will be permitted to make one transfer of all amounts under a Skandia Contract invested in the Old Portfolios free of any applicable transfer charges. The Supplement will state that ASLAC will not exercise any rights reserved under any Skandia Contract to impose additional restrictions on transfers until at least 30 days after the Substitution.

17. Within at least five days after the Substitution Date, ASLAC will mail a written notice to all Contract Owners affected by the Substitutions informing them that the Substitutions were completed (''Notice''). Notices will include transfer request forms, prepaid postage return envelopes, a current prospectus, and a confirmation of the transaction as required under rule 10b–10 under the Exchange Act. The Notice will repeat that ASLAC will not exercise any rights reserved by it under any of the Skandia Contracts affected by the Substitutions to impose additional restrictions on transfers until at least 30 days after the Substitutions.

18. Applicants state that the proposed Substitutions between sub-accounts will be effected to the extent practicable ''in-kind'' at the then current unit values of the sub-accounts in conformity with Section 22(c) of the 1940 Act and Rule 22c–1 thereunder. Applicants assert that the terms under which the in-kind redemptions and purchases will be made are reasonable and fair and do not involve overreaching on the part of any person concerned and the interests of Contract Owners will not be diluted. Applicants assert that using partial in-kind redemptions will alleviate some of the expenses involved in the in-kind redemptions. Applicants represent that in-kind redemptions will only be used to the extent they are consistent with the investment objectives and applicable diversification requirements of the New Portfolios, and all redemptions and purchases will be effected in conformity with Section 22(c) of the 1940 Act and Rule 22c–1 thereunder, and on a basis consistent with the valuation procedures of the applicable Old and New Portfolios

19. Applicants represent that the Substitutions will occur at relative unit values of the Old and New Portfolios, with no net change in the account value for any Contract Owner. Contract Owners will not incur any fees or charges including legal, accounting, brokerage-related, and other fees and expenses directly or indirectly as a result of the transfer of account value from any Old Sub-account, nor will their rights, or ASLAC's obligations, under any Skandia Contract be altered in any way. All contract level fees and charges and the asset-based fees (mortality, expense risk and administration fees) deducted by the separate accounts will remain the same after the proposed Substitutions. The proposed Substitutions will not alter in any way the annuity benefits, tax benefits or ASLAC's contractual obligations under the Skandia Contracts.

20. Applicants represent that the significant terms of the Substitutions described in the application include:

(a) The investment objectives of the New Portfolios will be the same as the investment objectives of the Old Portfolios providing Contract Owners a means to continue their current investment goals and risk expectations.

(b) The investment in the New Portfolios may be temporary investments for Contract Owners since Contract Owners always may exercise their own judgment as to the most appropriate alternative investment option available to them. No sales charge will be made in connection with any transfers among the sub-accounts. After the Substitutions, the Skandia Contracts will continue to offer a broad array of variable investment options. Contract Owners who have not annuitized may at any time, before or after the Substitutions, transfer their account value to any other sub-account offered under their respective Skandia Contract. ASLAC notes the total number of portfolios available to the Contract Owners both in number and investment style are as extensive and diverse as nearly all other variable contract issuers.

(c) The Substitutions and related transactions will be effected at the net asset value of the respective share, in conformity with Section 22(c) of the 1940 Act and Rule 22c–1 thereunder.

(d) The use of in-kind redemptions, to the extent appropriate and possible, will

reduce the brokerage expenses involved in the Substitutions.

(e) The Contract Owners will not incur any directly or indirectly related fees or charges, including brokerage-related fees or charges, as a result of the transfer of account value from any Old Sub-account.

(f) The Substitutions will not alter or affect the insurance benefits or rights of Contract Owners or the terms and obligations of the Skandia Contracts.

(g) The Substitutions are designed to avoid any adverse effects upon the tax benefits available to Contract Owners and are designed not to give rise to any current Federal income tax to Contract Owners.

(h) The Substitutions are expected to confer economic benefit to Contract Owners as described in the application.

(i) Contract Owners in the new AST Alger Growth Sub-account and the AST Alger Mid-Cap Growth Sub-account will not be subject to any 12b–1 fee, or be effected by any change in sub-advisor as a result of AST's ''manager-of-managers'' exemptive order, unless: (i) Contract Owners have had a right as beneficial owners of the AST Portfolios after the Substitutions to vote to approve the adoption of a 12b–1 plan or to approve the ''manager-of-managers'' order received from the Commission; or (ii) any Contract Owner allocates his or her Skandia Contract's account value to an AST investment option that has in effect a 12b–1 fee or ''manager-of-managers'' order.

(j) Other expenses in the new AST Alger Growth Sub-account and the AST Alger Mid-Cap Growth Sub-account will be capped at 0.04% for one year following the Substitution Date.

Applicant's Legal Analysis

1. Section 26(b) of the 1940 Act provides that it shall be unlawful for any depositor or trustee of a registered unit investment trust holding the security of a single issuer to substitute another security for such security unless the Commission shall have approved such substitution; and the Commission shall issue an order approving such substitution if the evidence establishes that it is consistent with the protection of investors and the purposes fairly intended by the policy and provisions of the 1940 Act.

2. Applicants request an order pursuant to Section 26(b) of the 1940 Act approving the Substitutions. Applicants assert that the purposes, terms, and conditions of the Substitutions are consistent with the protection for which Section 26(b) was designed. Applicants assert that the Substitutions will benefit investors because they will result in greater administrative efficiency and enhanced oversight of the New Portfolios by ASLAC. Additionally, Applicants assert that over time, the efficiencies that come with being part of a large coordinated fund affiliated with ASLAC will have resulting benefits to Contract Owners.

3. Additionally, Applicants assert that the proposed Substitutions and related transactions will be in the best interests of Contract Owners in that they will (a) increase ASLAC's control over the administrative aspects of the New Portfolios; (b) enhance an Old Portfolio with significant style drift; (c) provide Contract Owners with a more diverse number of portfolios within the AST family; (d) provide a means to gather significantly more assets; (e) participate in the value-added manager of managers platform; (f) reduce conflicts; and (g) promote administrative efficiencies.

4. Section 17(a)(1) of the 1940 Act prohibits any affiliated person of a registered investment company, or any affiliated person of an affiliated person, from selling any security or other property to such registered investment company. Section 17(a)(2) of the 1940 Act prohibits any such affiliated persons from purchasing any security or other property from such registered investment company.

5. Section 17(b) of the 1940 Act provides that the Commission may grant an order exempting a transaction prohibited by Section 17(a) of the 1940 Act upon application if evidence establishes that: (a) The terms of the proposed transaction, including the consideration to be paid or received, are reasonable and fair and do not involve overreaching on the part of any person concerned; (b) the proposed transaction is consistent with the investment policy of each registered investment company concerned, as recited in its registration statement and reports filed under the 1940 Act; and (c) the proposed transaction is consistent with the general purposes of the 1940 Act.

6. Applicants request an order pursuant to Sections 6(c) and 17(b) of the 1940 Act exempting the in-kind redemptions and purchases from the provisions of Section 17(a) of the 1940 Act.

7. Applicants assert that the terms of the Substitutions are reasonable and fair and do not involve overreaching on the part of any person concerned. Applicants represent that the Substitutions will be effected at the net asset value and the interests of Contract Owners will not be diluted. Applicants represent that in-kind redemptions will only be used to the extent they are consistent with the investment objectives and applicable diversification requirements of the affected portfolios.

8. Applicants assert that the Substitutions and the in-kind redemptions are consistent with the policies of each investment company involved and the general purposes of the 1940 Act, and comply with the requirements of Section 17(b).

Conclusion

Applicants assert that, for the reasons summarized above, the requested order approving the Substitutions and exempting the in-kind redemptions should be granted.

For the Commission, by the Division of Investment Management, pursuant to the delegated authority.

Jonathan G. Katz,

Secretary.

[FR Doc. 00–26801 Filed 10–18–00; 8:45 am]

BILLING CODE 8010–01–M

SECURITIES AND EXCHANGE COMMISSION

[Release No. 34–43430; File No. SR–CBOE–00–21]

Self-Regulatory Organizations; Notice of Filing of Proposed Rule Change by the Chicago Board Options Exchange, Inc. To Amend its Rule Governing the Operation of Its Automated Book Priority System To Permit Split-Price Executions

October 11, 2000.

Pursuant to section 19(b)(1) of the Securities Exchange Act of 1934 (''Act'') [1] and Rule 19b–4 thereunder,[2] notice is hereby given that on May 24, 2000, the Chicago Board Options Exchange, Inc. (''CBOE'' or ''Exchange'') filed with the Securities and Exchange Commission (''Commission'') the proposed rule change as described in Items I, II, and III below, which Items have been prepared by the Exchange. On June 22, 2000, CBOE filed Amendment No. 1 to the proposed rule change.[3] The Commission is publishing this notice to solicit comments on the proposed rule change from interested persons.

[1] 15 U.S.C. 78s(b)(1).

[2] 17 CFR 240.19b–4.

[3] In Amendment No. 1, CBOE amended the text of the proposed rule change and included a discussion of the indicator to be used when a book order is establishing CBOE's best bid or offer. *See* letter from Angelo Evangelou, Attorney, CBOE, to Joseph Corcoran, Attorney, Division of Market Regulation, Commission, dated June 20, 2000 (''Amendment No. 1'').

I. Self-Regulatory Organization's Statement of the Terms of Substance of the Proposed Rule Change

The CBOE proposes to amend its rules governing the operation of its Retail Automatic Execution System (''RAES'') to provide for split-price executions under the Automated Book Priority system. Below is the text of the proposed rule change. Proposed new language is italicized and proposed deletions are in brackets.

Rule 6.8. RAES Operations

This Rule governs RAES operations in all classes of options, except to the extent otherwise expressly provided in this or other Rules in respect of specified classes of options.

(a)(1) Firms on the Exchange's Order Routing System (''ORS'') will automatically be on the Exchange's Retail Automatic Execution System (''RAES'') for purposes of routing small public customer market or marketable limit orders into the RAES system. Those orders which are eligible for routing to RAES may be subject to such contingencies as the appropriate Floor Procedure Committee (''FPC'') shall approve. Public customer orders are orders for accounts other than accounts in which a member, non-member participant in a joint-venture with a member, or any non-member broker-dealer (including a foreign broker-dealer as defined in Rule 1.1 (xx)) has an interest. The appropriate Floor Procedure Committee (''FPC'') shall determine the size of orders eligible for entry into RAES in accordance with paragraph (e) of this Rule. For purposes of determining what a small customer order is, a customer's order cannot be split up such that its parts are eligible for entry into RAES. Firms on ORS have the ability to go on and off ORS at will. Firms not on ORS that wish to participate will be given access to RAES from terminals at their booths on the floor.

(ii) When RAES receives an order, the system automatically will attach to the order its execution price, determined by the prevailing market quote at the time of the order's entry to the system, except as otherwise provided in *paragraph (b) of this Rule in instances where the best bid or offer on the Exchange's book constitutes the prevailing market best bid or offer, and as otherwise provided in* Interpretation and Policy .02 under this Rule 6.8 in respect of multiple-traded options. A buy order will pay the offer, a sell order will sell at the bid. A Market-Maker logged on to participate in RAES (a ''Participating Market-Maker'') will be designated as contra-broker on the trade. A trade executed on RAES at an erroneous quote should be treated as a trade reported at an erroneous price and adjusted to reflect the accurate market after receiving a Floor Official's approval.

(ii) This rule shall apply to RAES in classes handled by DPM's except that the MTS Appointments Committee may make available additional series or raise the size of eligible orders in a DPM's classes pursuant to Rule 8.80.

(b) *When the best bid or offer on the Exchange's book constitutes the best bid or offer on the Exchange and is for a size less than the RAES order eligibility size for that class, such fact shall be denoted in the Exchange's disseminated quote by a ''Book Indicator''.* It is possible that the *best bid or offer on the Exchange's book constitutes the* prevailing market bid or offer [may be equal to the best bid or offer on the Exchange's book]. In those instances, a RAES order will be executed against the order in the book. In the event, the order in the book is for a smaller number of contracts than the RAES order, the balance of the RAES order will be assigned to participating market-makers at the same price at which the *initial portion* [rest] of the order was executed *up to an amount prescribed by the appropriate Floor Procedure Committee on a class-by-class basis (the ''Book Price commitment Quantity''). Any remaining balance thereafter shall be (i) routed to the crowd PAR terminal if Autoquote is not in effect for that series; (ii) assigned to participating market-makers at the Autoquote price if Autoquote constitutes the new prevailing market bid or offer; or (iii) executed against any order in the book that constitutes the new prevailing market bid or offer with the balance of the RAES order being assigned to participating market-makers at that price up to the Book Price Commitment Quantity. Any additional remaining balance of a RAES order shall be handled in accordance with (ii) or (iii) of this paragraph.*

(c)–(g) Unchanged.

* * * Interpretations and Policies:

.01–03 Unchanged.

.04 In those option classes where the Automated Book Priority (''ABP'') system *is not operational* or has not yet been implemented, if a RAES order would be executed at the price of one or more booked orders, the order will be rerouted on ORS to either the DPM or to another location pursuant to the firm's routing parameters. Under ordinary circumstances, in those option classes where the Automated Book Priority system *is not operational* or has not yet been implemented, when one or more RAES eligible orders in a class of options is re-routed on ORS as described (but not in cases when the orders are routed to the firm's booth), the crowd will be obligated to sell (buy) the rerouted order (or the first order in any group of rerouted orders at the same price) up to the number of contracts *represented by the booked order(s), plus the Book Price Commitment Quantity (as defined in paragraph (b) of this Rule) where applicable,* [equal to applicable maximum size of RAES eligible orders for that class of options] at the offer (bid) which existed at the time of the order's entry into the RAES system. Because the first such rerouted order will be entitled to a price that existed when the order was initially entered into the RAES system, it is imperative that such an order be represented by the floor brokers as quickly as possible. Orders re-routed to the firm's booth and orders rerouted to the trading station that are not entitled to the above protection will be entitled to be filled by the trading crowd at the bid or offer existing when the Floor Broker represents the order in open outcry in the crowd, pursuant to Rule 8.51.

.05–.08 Unchanged.

II. Self-Regulatory Organization's Statement of the Purpose of, and Statutory Basis for, the Proposed Rule Change

In its filing with the Commission, the CBOE included statements concerning the purpose of and basis for the proposed rule change and discussed any comments it received on the proposed rule change. The text of these statements may be examined at the places specified in Item IV below. The CBOE has prepared summaries, set forth in Sections A, B, and C below, of the most significant aspects of such statements.

A. Self-Regulatory Organization's Statement of the Purpose of, and Statutory Basis for, the Proposed Rule Change

1. Purpose

On October 8, 1999, the Commission approved a CBOE rule change establishing the Exchange's Automated Book Priority System (''ABP'').[4] ABP allows an order entered into RAES to trade directly with an order on the Exchange's customer limit order book in those cases where the best bid or offer on the Exchange's book is equal to the prevailing market bid or offer. For the option classes in which ABP has been

[4] *See* Securities Exchange Act Release No. 34–41995 (October 8, 1999), 64 FR 56547 (October 20, 1999) (File No. SR–CBOE–99–29).

implemented, CBOE represents that ABP has been beneficial to customers by preserving the priority of booked orders and preventing RAES orders from being kicked out to the crowd. Accordingly, ABP has aided customers using the RAES system as well as customers whose orders are in the Exchange's book, because both categories of orders have been executed more quickly than they would have been executed otherwise. However, a current feature of ABP provides that in the event the order in the book is for a smaller number of contracts than the RAES order, the entire balance of the RAES order is assigned to participating market-makers at the same price at which the initial portion of the order was executed against the book, regardless of the next prevailing best bid or offer on the Exchange. Thus, if the book contains an order for 1 contract that represents the best bid, an incoming market order to sell 50 contracts will execute against the book for 1 contract and then against the trading crowd for 49 contracts at the book price, regardless of the trading crowd's best bid.

The Exchange now proposes to enhance the ABP system so that RAES orders utilizing ABP are executed against the book price *up to* the applicable book volume or a larger amount as pre-determined by the appropriate Floor Procedure Committee (''FPC'') for the subject option class. That pre-determined contract amount, to be called the ''Book Price Commitment Quantity'', would be determined by the FPC, and could be set from zero contracts up to the maximum RAES eligible order size for that option class. The Exchange anticipates that the FPC will mandate a Book Price Commitment Quantity that will generally be uniform amongst option classes and that, as such, the established quantity will be widely known to CBOE customers and other market participants. Nevertheless, the Exchange intends to issue a regulatory circular regarding Book Price Commitment Quantity parameters established by the FPC. Further, because the FPC would have to conduct a meeting to adjust the Book Price Commitment Quantity, it is highly unlikely that the Book Price Commitment Quantity would be changed intra-day.

Thus, if the book contains an order for 1 contract that represents the best bid, and the Book Price Commitment Quantity is set to 40, an incoming market order to sell 50 contracts, would execute against the book for 1 contract and execute against the trading crowd for 39 contracts on RAES at the book price. Any remaining balance of a RAES order would be: (i) Routed to PAR if Autoquote is not in effect for that series; (ii) assigned to participating market-makers at the Autoquote price if Autoquote represents the best bid or offer; or (iii) executed against an order in the book if such order equals or represents the best bid or offer—with the balance of the RAES order being assigned to participating market-makers at the new book price up to the Book Price Commitment Quantity. So long as an order in the book equals or represents the next best bid or offer (and Autoquote is in effect for the subject series), any remaining balance of a RAES order would be handled pursuant to (ii) or (iii) above.

A ''Book Indicator'' will be affixed to the CBOE disseminated quotation when an order in the Exchange's Book represents the best bid or offer on the Exchange. This indicator will alert brokers and the public that the bid, offer or both are being generated by orders in the book, not by market maker quotes. With respect to the Book Indicator, the Exchange will disseminate an indicator ''B'' if the bid on the book is better than the trading crowd bid; ''O'' if the book offer is better than the trading crowd offer; and ''C'' if both the book bid and offer are better than the trading crowd bid and offer. However, the indicator will not be disseminated if the booked order is for a size greater than the RAES order eligibility size for the subject options class since a split-price execution would not occur in such instance. This indicator will be disseminated in the Special Market Conditions field that also includes indicators for, among other things, fast markets and trading halts. The Book Indicator will alert brokers and the public that a trade could be executed at more than one price in that a part of the order could be executed at one price against the book and against the crowd pursuant to the Book Price Commitment Quantity, and the remaining part could be executed at another price (or prices) against the best market from the book or crowd. It is anticipated, however, that the eventual implementation of size parameters for disseminated options quotations will obviate the need for the Book Indicator.

The following example illustrates the application of the proposed rule: the Book Price Commitment Quantity is set at 20 contracts; there are two sell orders resident in the book priced at 2 9/16 and 2 5/8 respectively—each for one contract; the crowd's Autoquote market is 2 1/2–2 3/4; and the best bid/offer on the Exchange is 2 1/2–2 9/16 (assume no other market center has a better bid/offer). An incoming RAES market order to buy 50 contracts would be executed as follows:

- One contract will be executed at 2 9/16 against the book;
- 19 contracts will be executed at 2 9/16 against the RAES wheel;
- The new best bid/offer is 2 1/2–2 5/8 against the book;
- One contract will be executed at 2 5/8 against the book;
- 19 contracts will be executed at 2 5/8 against the RAES wheel;
- The new best bid/offer is 2 1/2–2 3/4;
- The remaining 10 contracts will be executed against the RAES wheel at 2 3/4.

Currently, ABP has not yet been implemented for all option classes. SR–CBOE–00–03 amended CBOE Rule 6.8 Interpretation and Policy .04 to explicitly provide that there remains an obligation of the trading crowd, where ABP is not in place, to execute the first order rejected from RAES at the price of the booked order that caused the kickout. Thus, for those classes where ABP has not yet been implemented, the trading crowd must fill the first rejected order at the price of the booked order that created the kickout. This was done to ensure consistency with ABP requirements in those classes where ABP is in place. While the Exchange anticipates that ABP will be fully implemented for all option classes traded on the Exchange in the near future, the Exchange proposes to amend CBOE Rule 6.8 Interpretation and Policy .04 to provide that the first order rejected from RAES (because of a kickout based on a booked order) be filled against the book with any remainder being filled at the book price up to the Book Price Commitment Quantity established for that class, thus providing consistency with the proposed ABP rule.

Lastly, CBOE proposes to amend Rule 6.8, Interpretation and Policy .04, to have the Interpretation apply in instances where ABP is not operational as a result of system constraints or pursuant to a fast market situation. The Exchange also proposes to amend some of the wording in paragraphs (a) and (b) of the proposed rule change to better clarify the application of split-price executions under the ABP system. According to the Exchange, these wording changes do not alter the intent or application of the proposed rule change.

2. Statutory Basis

The CBOE believes the proposed rule change is consistent with and furthers the objectives of section 6(b)(5) [5] of the Act in that it is designed to remove

[5] 15 U.S.C. 78f(b)(5).

impediments to a free and open market and to protect investors and the public interest.

B. Self-Regulatory Organization's Statement on Burden on Competition

The CBOE does not believe that the proposed rule change will impose any burden on competition.

C. Self-Regulatory Organization's Statement on Comments on the Proposed Rule Change Received From Members, Participants, or Others

No written comments were solicited or received with respect to the proposed rule change.

III. Date of Effectiveness of the Proposed Rule Change and Timing for Commission Action

Within 35 days of the date of publication of this notice in the **Federal Register** or within such longer period (i) as the Commission may designate up to 90 days of such date if it finds such longer period to be appropriate and publishes its reasons for so finding or (ii) as to which the self-regulatory organization consents, the Commission will:

(A) By order approve such proposed rule change, or

(B) Institute proceedings to determine whether the proposed rule change should be disapproved.

IV. Solicitation of Comments

Interested persons are invited to submit written data, views, and arguments concerning the foregoing, including whether the proposed rule is consistent with the Act. Persons making written submissions should file six copies thereof with the Secretary, Securities and Exchange Commission, 450 Fifth Street, NW., Washington, DC 20549–0609. Copies of the submission, all subsequent amendments, all written statements with respect to the proposed rule change that are filed with the Commission, and all written communications relating to the proposed rule change between the Commission and any person, other than those that may be withheld from the public in accordance with the provisions of 5 U.S.C. 552, will be available for inspection and copying in the Commission's Public Reference Room. Copies of such filing will also be available for inspection and copying at the principal office of the CBOE. All submissions should refer to File No. SR–CBOE–00–21 and should be submitted by November 9, 2000.

For the Commission, by the Division of Market Regulation, pursuant to delegated authority.[6]

Jonathan G. Katz,

Secretary.

[FR Doc. 00–26804 Filed 10–18–00; 8:45 am]

BILLING CODE 8010–01–M

SECURITIES AND EXCHANGE COMMISSION

[Release No. 34–43435; File No. JR–NASA–99–69]

Self-Regulatory Organizations; Order Approving Proposed Rule Change and Notice of Filing and Order Granting Accelerated Approval of Amendment No. 3 Thereto by the National Association of Securities Dealers, Inc. Amending Certain Listing Standards of the Nasdaq Stock Market, Inc.

October 11, 2000.

I. Introduction

On November 22, 1999, the National Association of Securities Dealers, Inc. (''NASA'' or ''Association''), through its wholly owned subsidiary, The Nasdaq Stock Market, Inc. (''Nasdaq''), submitted to the Securities and Exchange Commission (''SEC'' or ''Commission''), pursuant to section 19(b)(1) of the Securities Exchange Act of 1934 (''Act'')[1] and Rule 19b–4 thereunder,[2] a proposed rule change amending certain Nasdaq listing standards. The Association submitted Amendments No. 1[3] and No. 2[4] to the proposed rule change on April 10, 2000, and April 27, 2000, respectively. The proposed rule change was published in the **Federal Register** for comment on June 7, 2000.[5] The Association submitted Amendment No. 3 to the proposed rule change on October 5, 2000.[6] This order approves the proposed rule change, as amended by Amendments No. 1 and 2, and grants accelerated approval to Amendment No. 3.

II. Description of the Proposed Rule Change

Nasdaq is proposing to amend its listing standards to: (1) Codify the time frames for determining compliance with the continued inclusion requirements for market capitalization and number of market makers; (2) clarify the need for shareholder approval for a transaction in which the *potential* issuance of shares could exceed the applicable threshold; (3) codify the method used to determine whether an American Depository Receipt complies with the listing standards; (4) clarify that rights are subject to initial inclusion standards; (5) clarify that the publicly held shares, market value of publicly held shares, and bid price initial inclusion requirements do not apply to rights and warrants to be listed on the Nasdaq National Market.

Compliance With the Continued Inclusion Requirements for Market Capitalization and Number of Market Makers

Rules 4310(c)(2)(B)(ii) and 4450(b)(1)(A) set forth the market capitalization standards for continued inclusion on The Nasdaq SmallCap Market and the Nasdaq National Market, respectively. These rules, however, unlike the bid price requirement, do not provide time frames for determining when an issuer is non-complaint or when it has regained compliance with these standards. Accordingly, Nasdaq proposes to amend Rule 4310(c)(8)(C)[7]

---

[6] 17 CFR 200.30–3(a)(12).

[1] 15 U.S.C. 78s(b)(1).

[2] 17 CFR 240.19b–4.

[3] *See* Letter to Jack Drogin, Senior Special Counsel, Division of Market Regulation (''Division''), Commission, from Robert E. Aber, Senior Vice President and General Counsel, Nasdaq, dated April 7, 2000 (''Amendment No. 1''). Amendment No. 1 clarifies that the proposed time frame for gaining compliance with the continued inclusion market capitalization standards applies to issuers listed on both The Nasdaq SmallCap Market and the Nasdaq National Market. In addition, Amendment No. 1 clarifies that the method for regaining compliance with the continued inclusion requirement for the number of market makers set forth in Rule 4310(c)(8)(A) applies to issuers listed on both The Nasdaq SmallCap Market and the Nasdaq National Market. Finally, Amendment No. 1 makes certain technical corrections to the proposed rule change.

[4] *See* Letter to Jack Drogin, Senior Special Counsel, Division, Commission, from Robert E. Aber, Senior Vice President and General Counsel, Nasdaq, dated April 25, 2000 (''Amendment No. 2''). Amendment No. 2 clarifies that Rule 4310(c)(8)(C) is being amended to specify time frames for determining when an issuer is non-compliant or has regained compliance with the Association's market capitalization standards. Amendment No. 2 also clarifies that the NASD's Rule 4300 series contains the qualification requirements for all securities included in The Nasdaq Stock Market while the Rule 4400 Series sets forth additional requirements for those securities designated for the Nasdaq National Market.

[5] Securities Exchange Act Release No. 42876 (May 31, 2000), 65 FR 36198.

[6] *See* Letter to Jack Drogin, Senior Special Counsel, Division, Commission, from John Nachman, Nasdaq, dated October 4, 2000 (''Amendment No. 3''). Amendment No. 3 withdraws proposed Rule 4200(a)(20), which defines market capitalization, and renumbers the remaining provisions of Rule 4200(a) accordingly.

[7] Although the time frames regarding compliance with the continued inclusion market capitalization standards are proposed to be set forth only in Rule 4310(c)(8)(A), these time frames, like those for the minimum bid price and market value of public float, are applicable to issuers listed on both The

Continued

to clarify that a failure to meet the market capitalization continued inclusion requirement shall result if the deficiency continues for a period of ten consecutive business days and that compliance may be regained by meeting the applicable standard for a minimum of ten consecutive business days.[8]

Rule 4310(c)(8)(A) provides that an issuer that fails to meet the continued inclusion requirements for the number of market makers has 30 calendar days to regain compliance. The rule, however, does not indicate how the issuer can regain compliance. Consequently, Nasdaq proposes to amend this rule to provide that compliance is achieved by meeting the applicable standard for a minimum of ten consecutive business days, which is similar to the method for determining compliance with the bid price requirement.[9]

Shareholder Approval for the Potential Issuance of Shares

Rules 4310(c)(25)(i)(b) and (d), 4320(e)(21)(G)(i)(b) and (d), and 4460(i)(1)(B) and (D) refer only to the issuance of shares in conjunction with the requirement for shareholder approval, while Rules 4310(c)(25)(H)(i)(c)(2), 4320(e)(21)(H)(i)(c)(2), and 4460(i)(1)(C)(ii), require shareholder approval based on the present or potential issuance of shares. Nevertheless, Nasdaq has stated that it has consistently interpreted the former shareholder approval rules as including potential issuances in order to protect shareholders' right to vote on significant corporate transactions. The proposed rule changes would therefore conform the language of these rules to clarify that shareholder approval is required based on the present or potential issuance of shares.

Changes to Reflect the Underlying Security for ADRs

Historically, Nasdaq states that it has looked to the underlying security of an American Depositary Receipt (''ADR'') for determining compliance with certain standards (*e.g.*, round lot shareholders, number of shares in the public float, market value of public float, and market capitalization). According to Nasdaq, Rule 4320 provides the initial and continued listing standards for ADRs, but does not make clear whether the underlying security should be considered when determining whether these standards have been met. The proposed rule change would clarify that the underlying security should be considered when determining compliance in the case of ADRs. In addition, the proposed rule change would clarify the continued inclusion time frame requirements for ADRs for market capitalization purposes.

Rights and Warrants

Rule 4420(d)(1) does not currently reference the initial listing of rights on the Nasdaq National Market. This Rule also states that warrants to purchase designated securities may be listed on the Nasdaq National Market provided that they substantially meet the initial inclusion requirements applicable to common stock. Consistent with the industry practices for pricing this type of security, Nasdaq states that it has not historically required issuers to satisfy the publicly held shares, market value of publicly held shares, or bid price initial inclusion standards. As such, Nasdaq proposes to amend this rule to clarify that the initial inclusion rules apply to rights as well as warrants and that issuers are not required to satisfy the publicly held shares, market value of publicly held shares, or bid price initial inclusion standards with respect to rights or warrants.[10]

III. Discussion

The Commission finds that the proposed rule change is consistent with section 15A of the Act[11] and the rules and regulations applicable to a national securities association. In particular, the Commission finds the proposed rule change is consistent with section 15A(b)(6) of the Act,[12] which requires the rules of an association to be designed to promote just and equitable principles of trade, to remove impediments to and perfect the mechanism of a free and open market and a national market system, and, in general, to protect investors and the public interest.[13]

Preliminarily, the Commission notes that the development and enforcement of adequate standards governing the listing of securities on an exchange is of critical importance to our financial markets and to the investing public. Listing standards serve as a means for a self-regulatory organization to screen issuers and to provide listed status only to bona fide companies with, among other things, substantial float, investor base and trading interest to ensure sufficient liquidity for fair and orderly markets. Additionally, the development and adherence to listing maintenance standards are equally as important. Once an issuer has been approved for listing, ongoing monitoring of the status and trading characteristics of that issuer ensures that standards for trading depth and liquidity are continually met, again to the benefit of the investing public. Finally, the Commission notes that initial listing and maintenance standards that are not sufficiently clear may not benefit issuers, the public interest, or our capital markets and indeed may impede a free and open market. Therefore, the Commission believes that the proposed rule change will promote the purposes of the Act by explicitly codifying and clarifying certain provisions of Nasdaq's listing and maintenance standards.

Compliance With the Continued Inclusion Requirements for Market Capitalization and Number of Market Makers

The Commission finds that setting forth the specific time frames for determining noncompliance and regaining compliance with Nasdaq's continued inclusion standards relating to the number of market makers and market capitalization removes impediments to and perfect the mechanism of a free and open market. As currently stated, the continued inclusion standards related to the number of market makers only discusses the time frame for determining when a failure to meet the standards exists; reference to time frames for determining subsequent compliance by the issuer is missing. Similarly, the continued inclusion standards related to market

Nasdaq SmallCap Market and the Nasdaq National Market. *See* Amendments No. 1 and 2, *supra* notes 3 and 4.

[8] Although this proposed rule, like the minimum bid price requirement, states that compliance may be regained by meeting the applicable standard for a minimum of ten consecutive business days, issuers are also required to demonstrate more than mere temporary compliance in order to protect the interests of prospective investors. *See, e.g., Ryan-Murphy, Inc.,* Securities Exchange Act Rel. No. 38999 (Sept. 2, 1997).

[9] Although the method of regaining compliance with the continued inclusion requirement for the number of market makers is proposed to be set forth only in Rule 4310(c)(8)(A), the method for regaining compliance is applicable to issuers listed on both The Nasdaq SmallCap Market and the Nasdaq National Market. *See* Amendments No. 1 and 2, *supra* notes 3 and 4.

[10] Issuers, however, must continue to comply with the requirement that there be at least 450,000 warrants outstanding immediately after the public distribution as set forth in existing NASD Rule 4420(d)(1). This rule is also being amended to clarify existing Nasdaq policy that there must be 450,000 rights outstanding immediately after the public distribution.

[11] 15 U.S.C. 78o–3.

[12] 15 U.S.C. 78o–3(b)(6).

[13] In approving this rule change, the Commission has considered the proposal's impact on efficiency, competition, and capital formation. 15 U.S.C. 78c(f).

capitalization set forth neither the time frames for determining non-compliance nor compliance. Thus, the proposed rule change provides additional information that is critical to the determination of an issuer's continuing compliance with the standards relating to the number of market makers and market capitalization should an issuer fail to comply with either category.

Shareholder Approval for the Potential Issuance of Shares

Making clear that shareholder approval is required in the case of actual or potential issuance of shares promotes just and equitable principles of trade, and removes an impediment to and perfects the mechanism of a free and open market and a national market system. The Commission notes that Nasdaq has consistently interpreted the shareholder approval rules to include the potential issuance of shares and therefore the proposed rule change explicitly codifies accepted practice. Additionally, the Commission finds that requiring shareholder approval for the potential issuance of shares protects a shareholder's ability to vote on a significant corporate transaction that might affect the rights of the voting shareholder.

Changes to Reflect the Underlying Security for ADRs

The proposed rule change relating to the requirement that the underlying security be considered in determining compliance with initial or continued listing standards is appropriate because Nasdaq has consistently looked to the security underlying an ADR in other contexts involving ADRs (*e.g.*, determining round lot shareholders, number of shares in the public float, market value of public float, and market capitalization). Thus, the proposed rule change removes an impediment to and perfects the mechanism of a free and open market by conforming the analysis of whether an ADR meets the initial or continued listing standards to other situations involving ADRs, and explicitly making clear that Nasdaq should consider the security underlying the ADR. The proposed rule change also protects the mechanism of a free and open market by explicitly stating the continued listing requirement time frames for ADRs.

Rights and Warrants

Finally, the Commission believes that the proposed rule change clarifying that rights as well as warrants are subject to the initial listing standards of Nasdaq Rule 4420(d)(1) will protect investors and the public interest. The Commission notes that the continued listing standards address both rights and warrants,[14] and thus the proposed rule change rightly conforms the initial listing standards to the continued listing standards. Furthermore, the Commission finds that clarifying that rights and warrants need not meet the publicly held shares, market value of publicly held shares, or bid price initial listing standards is in the public interest because Nasdaq has represented that industry practices for pricing rights and warrants are such that Nasdaq has not historically required issuers to satisfy these requirements. Thus, the proposed rule change clarifies that these standards are not applicable to rights and warrants. Furthermore, the Commission notes that rights and warrants will be to satisfy all other initial inclusion requirements before they can be listed on Nasdaq, which should help to ensure that only bona fide companies with substantial float, investor base, and trading interest list rights and warrants on Nasdaq.

Accelerated Approval of Amendment No. 3

The Commission believes that it is consistent with the protection of investors and the public interest and therefore finds good cause for approving Amendment No. 3 to proposed rule change prior to the thirtieth day after the date of publication of notice thereof in the **Federal Register**. Amendment No. 3 merely withdraws the portion of the proposed rule change that defines market capitalization to enable Nasdaq to more carefully consider how it wants to define the term without delaying approval of the remaining provisions of the proposed rule change.

IV. Solicitation of Comments

Interested persons are invited to submit written data, views, and arguments concerning Amendment No. 3, including whether the amendment is consistent with the Act. Persons making written submissions should file six copies thereof with the Secretary, Securities and Exchange Commission, 450 Fifth Street, NW., Washington, DC 20549–0609. Copies of the submissions, all subsequent amendments, all written statements with respect to the proposed rule change that are filed with the Commission, and all written communications relating to the proposed rule change between the Commission and any person, other than those that may be withheld from the public in accordance with the provisions of 5 U.S.C. 552, will be available for inspection and copying at the Commission's Public Reference Room. Copies of such filing will also be available for inspection and copying at the principal office of the Exchange. All submissions should refer to the File No. SR–NASD–99–69 and should be submitted by November 9, 2000.

V. Conclusion

For the foregoing reasons, the Commission finds that the proposed rule change is consistent with the requirements of the Act and the rules and regulations thereunder.

It Is Therefore Ordered, pursuant to section 19(b)(2) of the Act,[15] that the amended proposed rule change (SR–NASD–99–69) is approved.

For the Commission, by the Division of Market Regulation, pursuant to delegated authority.[16]

Jonathan G. Katz,

Secretary.

[FR Doc. 00–26803 Filed 10–18–00; 8:45 am]

BILLING CODE 8010–01–M

[14] *See* Nasdaq Rule 4450(d).

[15] 15 U.S.C. 78s(b)(2).

[16] 17 CFR 200.30–3(a)(12).

SECURITIES AND EXCHANGE COMMISSION

[Release No. 34–43429; File No. SR–NYSE–00–42]

Self-Regulatory Organizations; Notice of Filing and Immediate Effectiveness of Proposed Rule Change by New York Stock Exchange, Inc. Extending the Pilot Fee Structure Governing the Reimbursement of Member Organizations for Costs Incurred in the Transmission of Proxy and Other Shareholder Communications Materials

October 10, 2000.

Pursuant to section 19(b)(1) of the Securities Exchange Act of 1934 (''Act''),[1] (the ''Act'') and Rule 19b–4 thereunder,[2] notice is hereby given that on October 10, 2000, the New York Stock Exchange, Inc. (''Exchange'' or ''NYSE'') filed with the Securities and Exchange Commission (''SEC'' or ''Commission'') the proposed rule change as described in Items I, II, and III below, which Items have been prepared by the NYSE. The Commission is publishing this notice to solicit comments on the proposed rule change from interested persons.

[1] 15 U.S.C. 78s(b)(1).

[2] 17 CFR 240.19b–4.

I. Self-Regulatory Organization's Statement of the Terms of Substance of the Proposed Rule Change

The NYSE is proposing to extend the pilot fee structure (''Pilot Fee Structure'') regarding Exchange Rules 451 and 465 (''Rules'').[3] Among other things, the Rules establish guidelines for the reimbursement of expenses by NYSE issuers to NYSE member organizations for the processing of proxy materials and other issuer communications (collectively, ''Material'') with respect to security holders whose securities are held in street name. The Pilot Fee Structure is scheduled to expire on October 10, 2000. NYSE proposes to extend the pilot through November 20, 2000.

II. Self-Regulatory Organization's Statement of the Purpose of, and Statutory Basis for the Proposed Rule Change

In its filing with the Commission, the NYSE included statement concerning the purpose of and basis for the proposed rule change and discussed any comments it received on the proposed rule change. The text of these statements may be examined at the places specified in Item IV below. The NYSE has prepared summaries, set forth in sections A, B and C below, of the most significant aspects of such statements.

A. Self-Regulatory Organization's Statement of the Purpose of, and Statutory Basis for the Proposed Rule Change

1. Purpose

Among other things, the Pilot Fee Structure lowers certain guidelines concerning the reimbursement of fees for the distribution of Material, creates incentive fees to eliminate duplicative mailings, and establishes a supplemental fee for intermediates that coordinate multiple nominees. The proposed rule change would extend the Pilot Fee Structure termination date from October 10, 2000, to November 20, 2000.

An extension of the Pilot Fee Structure's termination date will give the Commission additional time to consider the pilot fees as well as the proposed nominee coordination fee,[4] without a lapse in the current rules. Absent an extension of the Pilot Fee Structure's termination date, the fees in effect prior to the pilot program would return to effectiveness after October 10, 2000, creating confusion in the market.

2. Basis

The Exchange believes that the proposed rule change is consistent with section 6(b)(4)[5] of the Act, which requires an exchange's rules to provide for the equitable allocation of reasonable dues, fees and other charges among its members and other persons using its facilities. In addition, the Exchange believes that the proposed rule change is consistent with section 6(b)(5)[6] of the Act, which requires that an exchange have rules that are designed to prevent fraudulent and manipulative acts and practices, to promote just and equitable principles of trade, to foster cooperation and coordination with persons engaged in regulating, clearing, settling, processing information with respect to, and facilitating transactions in securities, to remove impediments to and perfect the mechanism of a free and open market and a national market system, and, in general, to protect investors and the public interest.

B. Self-Regulatory Organization's Statement on Burden on Competition

The Exchange believes that the proposed rule changes does not impose any burden on competition that is not necessary or appropriate in furtherance of the purposes of the Act.

C. Self-Regulatory Organization's Statement on Comments on the Proposed Rule Change Received From Members, Participants or Others

NYSE has not solicited, and does not intend to solicit, comments on the proposed rule change. NYSE has not received any unsolicited comments from members or other interested parties.

III. Date of Effectiveness of the Proposed Rule Change and Timing for Commission Action

Because the foregoing proposed rule change: (1) Does not significantly affect the protection of investors or the public interest; (2) does not impose any significant burden on competition; and (3) does not become operative for 30 days from the date of filing, or such shorter time that the Commission may designate if consistent with the protection of investors and the public interest, the proposed rule change has become effective pursuant to section 19(b)(3)(A)[7] of the Act and Rule 19b–4(f)(6)[8] thereunder.[9]

A proposed rule change filed under rule 19b–4(f)(6) may not become operative prior to 30 days after the date of filing. However, Rule 19b–4(f)(6)(iii) permits the Commission to designate a shorter time if such action is consistent with the protection of investors and the public interest. NYSE seeks to have the proposed rule change become operative on or before October 10, 2000, in order to allow the Pilot Fee Structure to continue in effect on an uninterrupted basis.

The Commission, consistent with the protection of investors and the public interest, has determined to make the proposed rule change operative immediately through November 20, 2000. This extension of the Pilot Fee Structure will provide the Commission with additional time to review and evaluate the pilot fees as well as the proposed nominee coordination fee components.

The Commission notes that unless the current expiration date of the Pilot Fee Structure is extended, the reimbursement rates for Material distributed after October 10, 2000, will revert to those in effect prior to March 14, 1997. The Commission believes that such a result could be confusing and counterproductive.

Based on these reasons, the Commission believes that it is consistent with the protection of investors and the public interest that the proposed rule change become operative immediately through November 20, 2000. At any time within 60 days of the filing of the proposed rule change, the Commission may summarily abrogate such rule change if it appears to the Commission that such action is necessary or appropriate in the public interest, for the protection of investors, or otherwise in furtherance of the purposes of the Act.

IV. Solicitation of Comments

Interested persons are invited to submit written data, views and arguments concerning the foregoing, including whether the proposed rule change is consistent with the Act. Persons making written submissions should file six copies thereof with the Secretary, Securities and Exchange Commission, 450 Fifth Street, NW., Washington, DC 20549–0609. Copies of the submission, all subsequent

[3] The text of Rule 451 also is included at Para. 402.10(A) of the Exchange's *Listed Company Manual*.

[4] The Exchange submitted a proposed rule change to set forth the minimum functions that an intermediary is expected to perform to recover the nominee coordination fee. *See* Securities Exchange Act Release No. 43159 (August 16, 2000), 65 FR 51384 (August 23, 2000).

[5] 15 U.S.C. 78f(b)(4).

[6] 15 U.S.C. 78f(b)(5).

[7] 15 U.S.C 78s(b)(3)(A).

[8] 17 CFR 240.19b–4(f)(6).

[9] As required under Rule 19b–4(f)(6)(iii), the Exchange provided the Commission with written notice of its intent to file the proposed rule change.

amendments, all written statements with respect to the proposed rule change that are filed with the Commission, and all written communications relating to the proposed rule change between the Commission and any person, other than those that may be withheld from the public in accordance with the provisions of 5 U.S.C. 552, will be available for inspection and copying in the Commission's Public Reference Room. Copies of such filing will also be available for inspection and copying at the principal office of the NYSE. All submissions should refer to File No. SR–NYSE–00–42 and should be submitted by November 9, 2000.

For the Commission, by the Division of Market Regulation, pursuant to delegated authority.[10]

Jonathan G. Katz,

Secretary.

[FR Doc. 00–26802 Filed 10–18–00; 8:45 am]

BILLING CODE 8010–01–M

[10] 17 CFR 200.30–3(a)(12).

SECURITIES AND EXCHANGE COMMISSION

[Release No. 34–43427; File No. SR–AMEX–00–40]

Self-Regulatory Organizations; Notice of Filing and Order Granting Accelerated Approval of Proposed Rule Change by the American Stock Exchange LLC Relating to the Listing and Trading of Inflation Indexed Securities

October 10, 2000.

Pursuant to Section 19(b)(1) of the Securities Exchange Act of 1934 (''Act''),[1] and Rule 19b–4 thereunder,[2] notice is hereby given that on August 3, 2000, the American Stock Exchange LLC (''Amex'' or ''Exchange'') filed with the Securities and Exchange Commission (''SEC'' or ''Commission'') the proposed rule change as described in Items I and II below, which Items have been prepared by the Exchange. The Commission is publishing this notice to solicit comments on the proposed rule change from interested persons and to grant accelerated approval to the proposed rule change.

I. Self-Regulatory Organization's Statement of the Terms of Substance of the Proposed Rule Change

The Exchange proposes to approve for listing and trading under Section 107A of the Amex *Company Guide,* index linked debt securities based in whole or in part on changes in the value of the U.S. Consumer Price Index. The text of the proposed rule change is available at the Office of the Secretary, Amex, and at the Commission.

II. Self-Regulatory Organization's Statement of the Purpose of, and Statutory Basis for, the Proposed Rule Change

In its filing with the Commission, the Exchange included statements concerning the purpose of and basis for the proposed rule change and discussed any comments it received on the proposed rule change. The text of these statements may be examined at the places specified in Item IV below. The exchange has prepared summaries, set forth in sections A, B, and C below, of the most significant aspects of such statements.

A. Self-Regulatory Organization's Statement of the Purpose of, and Statutory Basis for, the Proposed Rule Change

1. Purpose

Under Section 107A of the Amex *Company Guide,* the Exchange may approve for listing and trading securities which cannot be readily categorized under the listing criteria for common and preferred stocks, bonds, debentures, or warrants.[3] Under Section 107A, in March of 1995, the Commission approved the Exchange's proposed rule change relating to the listing and trading of commodity linked notes (''COINS'').[4] And in February of 1996, the Commission approved the Exchange's proposed rule change relating to the listing and trading of commodity indexed securities (''ComPS'').[5] The Amex now proposes to list for trading under Section 107A of the *Company Guide,* indexed linked debt securities[6] (''Securities'') whose value in whole or in part will be based upon the non-seasonally adjusted U.S. City Average All Items Consumer Price Index for All Urban Consumers (the ''CPI–U'' or ''Index''), published monthly by the U.S. Department of Labor Bureau of Labor Statistics (''BLS''). Holders of the Securities receive at maturity a payment linked to the value of the Index based on the following formula: Face Value + (Ending Index Value—Beginning Index Value), but not less than zero.

The ''Beginning Index Value,'' which is approximately equal to the forward value of the CPI–U on the pricing date, will be announced at the time of the offering. The ''Ending Index Value'' will be equal to the ending level of the CPI–U, as published by the BLS and used by the U.S. Treasury for its Treasury Inflation Protected Securities (''TIPS'').

CPIS Description

The Securities will be non-convertible and will conform to the listing guidelines under Section 107A of the *Company Guide,* which provide that such issues have: (1) Assets in excess of $100 million and stockholders' equity of at least $10 million; (2) a minimum public distribution of 1 million trading units with a minimum of 400 public shareholders; except, if traded in thousand dollar denominations, then no minimum number of holders; (3) a market value of not less than $4 million.

Although a specific maturity date will not be established until the time of the offering, the Securities will provide for maturity of not less than one year from the date of issue. The Securities may provide for periodic payments and/or payments at maturity based in whole or in part on changes in the value of the Index. At maturity holders of the Securities may receive less than 100% of the initial issue price.

The redemption price of the Securities will be based on, in part, the ending Reference CPI–U level for the maturity date. At redemption, holders will receive Face Value *plus* (Ending Index Value *minus* Beginning Index Value); but not less than zero. Thus, at redemption, the holder could receive less than the Face Value or the Issue Price of the Securities, but never less than zero.[7] The denomination will be at least $1000 and the redemption will be multiplied by a gross-up factor to produce a $1000 face value, *i.e.* Gross-up × Face Value *plus* (Ending Index Value *minus* Beginning Index Value). Equity margin rules will apply to the trading of the Securities. The Securities are designed to produce an ever-

[1] 15 U.S.C. 78s(b)(1).

[2] 17 CFR 240.19b–4.

[3] *See* Securities Exchange Act Release No. 27753 (March 1, 1990), 55 FR 8626 (March 8, 1990).

[4] *See* Securities Exchange Act Release No. 35518 (March 21, 1995), 60 FR 15804 (March 27, 1995).

[5] *See* Securities Exchange Act Release No. 36885 (February 26, 1996), 61 FR 8315 (March 4, 1996).

[6] When the Amex originally filed its proposed rule change with the SEC, the Amex was uncertain as to whether the Securities would trade as preferred equity securities or debt securities. The Amex has since determined that the Securities will trade as debt securities. As per telephone conversation between Scott Van Hatten, Legal Counsel, Derivative Securities, and Heather Traeger, Attorney, Division of Market Regulation, SEC, on September 29, 2000.

[7] The underwriter has advised the Amex that the Securities will comply with the ''hybrid exemption'' of the Commodity Futures Trading Commission (''CFTC''), 17 CFR Part 34. The underwriter further advised that it has presented a description of the structure and sample termsheet of the Securities to the staff of the CFTC in order to facilitate the approval of the registration and listing of the Securities.

increasing return as inflation rises. The Exchange represents that because inflation returns historically have been negatively correlated with financial assets, the ownership of the Securities (although their return is uncertain) are intended to diversify a portfolio of financial instruments.

Index Description

The Securities will be linked to a 3-month lagged version of CPI referred to as ''Reference CPI–U.'' This is the same lagged version of CPI–U used by the U.S. Treasury for its TIPS. The CPI–U is the non-seasonally adjusted U.S. City Average All Items Consumer Price Index for All Urban Consumers, published monthly by the BLS. The Index represents prices of all goods and services purchased for consumption by urban households. User fees (such as water and sewer service) and sales and excise taxes paid by the consumer are also included. Income taxes and investment items (such as stocks, bonds, and life insurance) are not included. The CPI–U includes expenditures by urban wage earners and clerical workers, professional, managerial, and technical workers, the self-employed, short-term workers, the unemployed, retirees and others not in the labor force. The CPI–U is widely disseminated by vendors of financial information and quoted in the financial press. It is also available at the BLS's website: *http://www.bls.gov*.

If, while a U.S. Treasury TIPS is outstanding, the CPI–U is (1) discontinued, (2) in the judgment of the Secretary of the Treasury, fundamentally altered in a manner materially adverse to the interests of an investor in U.S. Treasury TIPS, or (3) in the judgment of the Secretary of the Treasury, altered by legislation or Executive Order in a manner materially adverse to the interests of an investor in U.S. Treasury TIPS, the Treasury, after consulting with the BLS, will substitute an appropriate alternative index. Such alternative index will also be used in the Securities.

In calculating the Index, price changes for various items are averaged together with weights that represent their importance in the spending of urban households in the United States. The contents of the market basket of goods and services and the weights assigned to the various items are updated periodically to take into account changes in consumer expenditure patterns. The CPI–U is expressed in relative terms in relation to a time base reference period for which the level is set at 100 (currently the base reference period used by the BLS is 1982–1984). For example, if the CPI–U for the 1982–84 reference period is 100.0, an increase of 16.5 percent from that period would be shown as 116.5.

As a matter of policy the BLS has made numerous improvements and changes to the Index over the last 25 years and it is likely to do so in the future. Technical changes made by the BLS to the Index to improve its accuracy include, but are not limited to, changes in: (1) The specific items (*e.g.*, apples or major appliances) to be priced for inclusion in the Index; (2) the way individual price quotations are aggregated to construct a component price index for these items; (3) the method for combining these component price indices to obtain the comprehensive, all-items CPI–U; and (4) the procedures for incorporating new goods into the Index and making adjustments for quality changes in existing goods. Examples of recent methodological improvements include use of regression models to adjust for the quality improvements in various goods (televisions, personal computers, *etc.*), introduction of geometric averages to account for consumer substitution within CPI–U categories, and changing the housing/shelter formula to improve rental equivalence estimation. These changes and changes in the future could reduce the level of increase in the CPI–U and could lower the redemption value of the Securities.

Historically, the BLS rebases the CPI–U approximately every 10 years. The current standard reference base period is 1982–1984 = 100. Prior to the release of the CPI–U for January 1988, the standard reference base was 1967 = 100. If the BLS rebases the CPI–U during the time the Securities are outstanding but continues to publish the old CPI–U, the Reference CPI–U for the Securities will continue to be calculated using the existing base period in effect for the CPI–U used at issuance of the Securities. Although numerical comparisons between indices with different base periods cannot be made, the conversion to a new reference base does not affect the measurement of the percent changes in a given index series from one time period to another, except for rounding differences. Thus rebasing will affect the published ''headline'' number often quoted in the financial press; however, the Reference CPI–U calculation for the Securities should not be adversely affected by any such rebasing as the old-based CPI–U can be calculated by using the percent changes of the new rebased CPI–U to calculate the levels of the old CPI–U series (the two series should have the same percentage change, but at different levels). However, determinations of the Secretary of Treasury in regard to all reference CPI–U levels, and whether a rebasing constitutes an index contingency, and any index remedies implemented, will be final.

Reference CPI–U

Reference CPI–U is a 3 month lagged version of CPI–U. Reference CPI–U for the first day of any calendar month is the CPI–U for the third preceding calendar month, as reported by BLS in the second preceding calendar month. For example, the Reference CPI–U applicable to April 1 in any year is the CPI–U for January of that year, which is reported by the BLS in February of that year. The Reference CPI–U for any date other than the first day of the month is the linear interpolation between the Reference CPI–U for the first day of such month and the first day of the immediately following month. Thus the Reference CPI–U for the stated maturity is lagged 3 months and should be determinable prior to stated maturity.

Index Contingencies

The Securities will use the same index contingencies as the US Treasury for its TIPS.[8] Index contingencies include how the Reference CPI–U will be affected by (1) revisions in previously reported CPI–U, (2) rebasing of the CPI–U by the BLS, (3) material adverse changes, in the judgment of the Treasury Secretary, to the CPI–U by legislation or Executive Order, or (4) delays in reporting CPI–U. The Securities will use the index contingency remedies as pronounced by the US Treasury. Determinations of the Secretary of Treasury in this regard will be final.

The Securities will be subject to the Exchange's equity margin rules and the Exchange's debt trading rules.

2. Statutory Basis

The proposed rule change is consistent with Section 6(b) of the Act[9] in general and furthers the objectives of Section 6(b)(5)[10] in particular in that it is designed to prevent fraudulent and manipulative acts and practices, to promote just and equitable principles of trade, to foster cooperation and coordination with persons engaged in facilitating transactions in securities, and to remove impediments to and perfect the mechanism of a free and

[8] 31 CFR Part 356 ''Department of the Treasury Circular, Public Debt Series No. 1–93'', *see http://www.publicdebt.treas.gov*.

[9] 15 U.S.C. 78f(b).

[10] 15 U.S.C. 78f(b)(5).

open market and a national market system.

B. Self-Regulatory Organization's Statement on Burden on Competition

The Exchange does not believe that the proposed rule change will impose any burden on competition.

C. Self-Regulatory Organization's Statement on Comments on the Proposed Rule Change Received From Members, Participants or Others

No written comments were solicited or received with respect to the proposed rule change.

III. Solicitation of Comments

Interested persons are invited to submit written data, views, and arguments concerning the foregoing, including whether the proposed rule change is consistent with the Act. Persons making written submissions should file six copies thereof with the Secretary, Securities and Exchange Commission, 450 Fifth Street, N.W., Washington, D.C. 20549–0609. Copies of the submission, all subsequent amendments, all written statements with respect to the proposed rule change that are filed with the Commission, and all written communications relating to the proposed rule change between the Commission and any person, other than those that may be withheld from the public in accordance with the provisions of 5 U.S.C. 552, will be available for inspection and copying at the Commission's Public Reference Room. Copies of such filing will also be available for inspection and copying at the principal office of the Exchange. All submissions should refer to File No. SR–AMEX–00–40 and should be submitted by November 9, 2000.

IV. Commission's Findings and Order Granting Accelerated Approval of Proposed Rule Change

The Commission finds that the proposed rule change is consistent with the requirements of Section 6(b)(5) of the Act [11] and the rules and regulations thereunder applicable to a national securities exchange. In particular, the Commission believes that the availability of the Securities will provide an instrument for investors to achieve desired investment objectives through the purchase of an exchange-traded debt product linked to the CPI–U. These objectives include receipt of an increasing real rate of return if inflation rises and the ability for investors to hedge against unanticipated inflation. For the reasons discussed below, the Commission has concluded that the Amex listing standards applicable to the Securities are consistent with the Act.

The Securities are index-linked debt securities whose value in whole or in part will be based upon the non-seasonally adjusted CPI–U. The Securities are non-convertible and will conform to the Amex listing guidelines under Section 107A of the *Company Guide.* The specific maturity date will not be established until the time of the offering, but will be not less than one year from the date of issue. The Securities may provide for periodic payments and/or payment at maturity based in while or in part on changes in the value of the Index. Holders of the Securities will receive at maturity a payment linked to the value of the Index based on the following formula: Face Value + (Ending Index Value—Beginning Index Value), but not less than zero. The denomination will be at least $1000. In structure, the Commission finds that the proposed Securities are similar to previously approved exchange-traded index-linked securities.[12]

In addition, the Amex equity margin rules and debt trading rules will apply to the Securities. The Commission believes that the application of these rules should strengthen the integrity of the Securities. The Commission also believes that the Amex has appropriate surveillance procedures in place to detect and deter potential manipulation for similar index-linked products. By applying these procedures to the Securities, the Commission believes that the potential for manipulation of the Securities is minimal, thereby protecting investors and the public interest. The Commission further notes that the underlying Index is managed by the BLS, an entity independent of both the Exchange and the Issuer, and thus, a factor which the Commission believes should act to minimize the possibility of manipulation. In addition, the CPI–U is widely disseminated by vendors of financial information, quoted in the financial press, and available at the BLS's website.

The Commission also notes that the Amex will issue a circular on the Securities. The circular should include, among other things, a discussion of the risks which may be associated with the Securities in addition to details on the composition of the Index and how the rates of return will be computed. Further, pursuant to Exchange Rule 411, the Exchange will impose a duty of due diligence on its members and member firms to learn the essential facts relating to every customer prior to trading the Securities.

Based on these factors, the Commission finds that the proposal to trade the Securities is consistent with Section 6(b)(5) of the Act.[13]

Amex has requested that the Commission find good cause for approving the proposed rule change prior to the thirtieth day after the date of publication of notice in the **Federal Register.** The Commission believes that the proposal raises no new regulatory issues that were not addressed in similar filings for index-linked products. Furthermore, the Commission believes that it is appropriate to permit investors to benefit from the flexibility afforded by Securities by trading them as soon as possible. Accordingly, the Commission finds good cause to accelerate approval of the proposed rule change, as amended.

It is Therefore Ordered, pursuant to Section 19(b)(2) of the Act,[14] that the proposed rule change (SR–AMEX–00–40) is hereby approved on an accelerated basis.

For the Commission, by the Division of Market Regulation, pursuant to delegated authority.[15]

Jonathan G. Katz,

Secretary.

[FR Doc. 00–26805 Filed 10–18–00; 8:45 am]

BILLING CODE 8010–01–M

[11] 15 U.S.C. 78f(b)(5).

[12] *See, e.g.,* Securities Exchange Act Release No. 41546 (June 22, 1999), 64 FR 35222 (June 30, 1999).

[13] 15 U.S.C. 78s(b)(5).

[14] 15 U.S.C. 78s(b)(2).

[15] 17 CFR 200.30–3(a)(12).

DEPARTMENT OF STATE

[Public Notice 3442]

Bureau of Educational and Cultural Affairs Request for Proposals (ECA/PE/C/EUR–01–19): Exchanges and Training Programs for the New Independent States (NIS): Kazakhstan, Kyrgyzstan, Tajikistan, Turkmenistan, Uzbekistan, Armenia, Azerbaijan, Georgia, Belarus, Moldova, Ukraine, Russia

SUMMARY: The United States Department of State, Bureau of Educational and Cultural Affairs, Office of Citizen Exchanges, Europe/Eurasia Division, announces an open competition for assistance awards in the areas of Media Training, Women's Leadership, Public Advocacy Training, and Prevention of Trafficking in Women and Girls. Public and private non-profit organizations meeting the provisions described in IRS regulation 26 CFR 1.501C may apply to

conduct exchanges and training programs. Grants are subject to the availability of funds.

Overall grant making authority for this program is contained in the Mutual Educational and Cultural Exchange Act of 1961, Public Law 87–256, as amended, also known as the Fulbright-Hays Act. The purpose of the Act is ''to enable the Government of the United States to increase mutual understanding between the people of the United States and the people of other countries * * *; to strengthen the ties which unite us with other nations by demonstrating the educational and cultural interests, developments, and achievements of the people of the United States and other nations * * * and thus to assist in the development of friendly, sympathetic and peaceful relations between the United States and the other countries of the world.'' The funding authority for the program cited above is provided through the Fulbright-Hays Act and the FREEDOM Support Act.

Programs and projects must comply with Bureau requirements and guidelines outlined in the Solicitation Package: the Request for Proposals (RFP) and the Proposal Submission Guidelines (PSI).

Announcement Title and Number

All communications with the Bureau concerning this Request for Proposals (RFP) should refer to the announcement title ''Exchanges and Training Programs for the NIS'' and reference number ECA/PE/C/EUR–01–19.

Overview

The Bureau of Educational and Cultural Affairs (the Bureau) invites applicants to submit proposals that encourage the growth of democratic institutions in Kazakhstan, Kyrgyzstan, Tajikistan, Turkmenistan, Uzbekistan, Armenia, Azerbaijan, Georgia, Belarus, Moldova, Ukraine and Russia. Exchanges and training programs supported by the institutional grants from the Bureau should operate at two levels: they should enhance institutional partnerships, and they should offer practical information to individuals and groups to assist them with their professional and volunteer responsibilities.

Strong proposals usually have the following characteristics: an active, existing partnership between a U.S. organization and a NIS institution(s); a proven successful track record for conducting program activity; cost-sharing from U.S. and NIS sources, including donations of air fares, hotel and/or housing costs, ground transportation, interpreters, room rentals, etc.; experienced staff with NIS language ability; a clear, convincing plan outlining exactly how the program components will be carried out and how permanent results will be accomplished as a result of the grant; and a follow-on plan that extends beyond the Bureau grant period. Knowledge of the current technological capacity (Internet connectivity, email, hardware and software) of NIS partners and their countries and/or regions, and a description of the role of technology in the proposed program, are essential. Cost-sharing in tangible forms of in-kind and monetary contributed to the program by the prospective grantee institution, NIS partners, as well as funding from third party sources, should be included in the budget.

Unless otherwise specified below: (1) Program activity may include: ''training of trainers (TOT),'' internships, short-term training, consultations, study tours, site visits, and extended, intensive workshops; and (2) programming may take place in the United States and/or in Russia, Belarus, Moldova, Ukraine, Armenia, Azerbaijan, Georgia, Kazakhstan, Kyrgyzstan, Turkmenistan and Uzbekistan. Proposals should reflect a practical understanding of the current political, economic and social environment that is relevant to the theme addressed in the proposal. Proposals should also indicate a strong knowledge of similar activities and organizations working in the region. The Bureau strongly encourages applicants to design exchange programs for non-English speakers.

Applicants should identify the U.S. and NIS partner organizations and individuals with whom they are proposing to collaborate and describe in detail previous cooperative projects. Specific information about the NIS partners' activities and accomplishments is required and should be included in the section on ''Institutional Capacity.'' Resumes for individuals mentioned in the proposal should be included, including proposed U.S. and NIS staff, trainers, consultants, etc.

Programs should be designed so that the sharing of information and training that occurs during the grant period will continue long after the grant period is over. Proven methods of sustainability include, but are not limited to: a model TOT program that would include initial training, practice presentation sessions for the NIS participants, followed by training activities coordinated and implemented by the NIS participants in their home countries; a commitment to create or support in-country training/resource centers; plans to create online communities, professional networks or professional associations; regularly published electronic and/or hard-copy newsletters; and ongoing mentoring through Internet communication.

To be considered for a grant award in this competition, the proposed training and exchange programs must address one of the following themes:

- Media Training (Ukraine or Belarus/Ukraine, Russia, Caucasus Regional, Central Asia Regional)
- Women's Leadership Programs (Armenia, Azerbaijan, Georgia, Kazakhstan, Kyrgyzstan, Tajikistan, Turkmenistan and Uzbekistan—Single Country & Regional)
- Public Advocacy Training for NGOs and Associations (Russia, Belarus/Russia, Belarus—with Cross-Border component)
- Prevention of Trafficking in Women and Girls (Russia, Belarus, Moldova—Single- and Multi-country)

Media Training

Overview

In most countries of the NIS, severe economic crises and attempts by government and private sector to control media outlets are threatening the survival of the independent media. Although training in the area of objective reporting and investigative journalism has been conducted in many NIS countries, most journalists would benefit from training in this area. The ability and know-how to develop new methods of effective, applicable income generation and to implement better fiscal management practices, and a commitment to objective reporting are critical to the survival of independent media.

The Bureau is interested in proposals from applicants who possess a thorough understanding of the current state and needs of the media in the NIS. Training activities should not duplicate the work done under recent or existing media training programs, but should complement those efforts.

Proposals may include a combination of in-country and U.S.-based training activities. When providing a U.S.-based component, the program should include a hands-on internship training component at an appropriate media outlet. For these internships, the names of those media establishments willing to host participants should be provided and the applicant should describe why these media establishments have been chosen. The internship format may include both individual placements as well as work in small groups (not to exceed three at a time). If the small group format is used, the internships

must have a practical program component, not just be site visits. For proposals with a U.S.-based component, the Bureau will give higher ranking to proposals that ensure lasting linkages between these participants and their American colleagues. When organizations propose an internship program at a U.S. media outlet, efforts should be made to recruit participants who possess some knowledge of the English language.

Media Training for Ukraine or Ukraine/Belarus

- In-country training activities that include both Belarusians and Ukrainians should take place in Ukraine.
- Proposals should emphasize training in objective reporting, investigative journalism and/or developing and implementing effective and applicable income generation schemes and adopting better fiscal management practices.
- Participants may be journalists and/or media managers.
- Applicants are strongly encouraged to submit proposals that include both Belarusian and Ukrainian participants.

Media Training for Russia

- Proposals should emphasize training in objective reporting and/or developing and implementing effective and applicable income generation schemes and adopting better fiscal management practices.
- Participants may be journalists and/or media managers.
- Participants should be recruited from areas outside of the major cities of Moscow and St. Petersburg.

Regional Media Training for the Caucasus Region

- Proposals should emphasize training in objective reporting and/or developing and implementing effective and applicable income generation schemes and adopting better fiscal management practices.
- When possible, applicants are encouraged to include working visits to media outlets in another country of the region.
- Participants may be journalists and/or media managers.

Regional Media Training for Central Asia

- Proposals should focus efforts on Kazakhstan, Kyrgyzstan and Uzbekistan.
- Participants should be media managers.
- Projects should emphasize training in developing and implementing effective and applicable income generation schemes and adopting better fiscal management practices in order to reduce dependence on government support.

Women's Leadership Training for Central Asia and the Caucasus Region

Overview

Over the past decade, women's leadership programs and women-run organizations have been supported and strengthened through local, national and international initiatives. Much of the work that has been done can be replicated and adapted in other communities, creating a closer knit community of women's groups and using available resources to the utmost potential. For this competition, our priorities focus on Central Asia and the Caucasus Region. American organizations and their NIS partners should jointly develop proposals that concentrate on strengthening and broadening existing networks in order to further the progress and provide cohesion for women's groups in these regions and across borders. Applicants should accurately describe current advances in the sphere of women's leadership, impart a keen understanding of each country's unique role, ensure equity if a regional program is proposed, and provide a clear explanation of the proposed project's potential contribution to the larger domestic and international efforts in women's leadership training programs.

The target audience should be goal-oriented women and women's groups who are currently active in their communities. In each country or region, participants should be recruited from outlying cities, towns and villages, in addition to capital cities. Needs assessments should be conducted prior to or during proposal development; priority will be given to partnerships whose needs and goals are already defined. Proposed training sessions should emphasize development of organizational skills; improving organizational efficiency; developing and sustaining networks and coalitions with organizations in the public and private sector; and implementation of educational, informational and/or advocacy programs for communities throughout the country and/or region. Proposals may include a plan for building regional associations and networks of women's organizations.

Program activity may take place in the NIS countries and/or in the United States. These programs are intended to provide opportunities for NIS women and women's groups to increase their visibility and effectiveness in the social, economic, political and democratic spheres. There are various possibilities for acceptable training programs. The following guidelines should aid in the program design process. The Bureau welcomes programming ideas that are justified, innovative, well defined and include a detailed plan for implementation.

Women's Leadership Programs for Central Asia (Kazakhstan, Kyrgyzstan, Tajikistan, Turkmenistan, Uzbekistan)

- Women's leadership in Central Asia can be addressed in single-country or regional programs focusing on citizen participation, organizational development, growth and sustainability.
- Organizations that have previously conducted women's leadership training programs in Russia and Ukraine are encouraged to replicate and adapt their programs for the women's leadership programs in Central Asia. These programs should include experienced trainers from Russia and/or Ukraine for the training components held in Central Asia.
- The Bureau encourages programs that support or build on country- or region-specific themes or target audiences. Themes may include, but are not limited to, combinations of the following: community development, cottage industry and small business networks, NGOs and awareness campaigns, public-private cooperation, professional development, political leadership, and needs of special interest groups (i.e. ethnic minorities, women with disabilities, young people).
- Priority will be given to programs that include a strong multiplier effect and that will result in the support or creation of a network or coalition with activities continuing after the grant period. Creation of coalitions and networks should be complementary and not duplicative.
- Applicants are strongly encouraged to include women from Tajikistan and Turkmenistan in the proposal's target audience. However, in-country activities for Central Asians should not take place in Tajikistan. Applicants should justify the selection of a regional training site(s) in Central Asia and outline the logistics necessary for participants from these two countries to participate. For example, the applicant should describe in detail the benefit of holding the training in the proposed location and potential means of transportation, passport and visa requirements between the Central Asian countries, and any other travel arrangements issues relevant to the region.
- Program plans may include a component for a Small Grants

Competition. This requires a timeline and detailed plan for outreach, advertising, recruitment and selection; a sample application; a description of the proposal review and award mechanism; a plan for how the grantee would monitor and evaluate small grant activity; and the proposed amount for an average grant. Funds for the Small Grants Competition should be no more than 25% of the total requested from the Bureau.

Women's Leadership Programs for the Caucasus Region (Armenia, Azerbaijan, Georgia)

• Women's leadership programs in the Caucasus Region should focus on citizen participation, cross-border networking and coalition building, organizational development, growth and sustainability.

• The Bureau encourages programs that support or build on region-specific themes or target audiences. Themes could include, but are not limited to, combinations of the following: community development, cottage industry and small business networks, NGOs' role in societal issues and awareness campaigns, public-private cooperation, professional development, political leadership, cross-cultural and cross-border issues, and needs of special interest groups (i.e. ethnic minorities, women with disabilities, young people).

• Priority will be given to programs that include a strong multiplier effect and that will result in the support or creation of a network or coalition with activities continuing after the grant period. Creation of coalitions and networks should be complementary and not duplicative.

• Applicants should indicate how technology and Internet connectivity will help in implementation of regional program components.

• Program plans may include a component for a Small Grants Competition. This requires a detailed plan for recruitment and advertising; a sample application; a description of the proposal review and award mechanism; a plan for how the grantee would monitor and evaluate small grant activity; and the proposed amount for an average grant. Funds for the Small Grants Competition should be no more than 25% of the total requested from the Bureau.

Public Advocacy Training for NGOs and Associations for Russia, Belarus/Russia, Belarus/Cross-Border

Overview

Public advocacy training on the grassroots level provides a basis for organizations to prioritize tasks and focus on issues in a practical way, thus allowing them to more effectively impart their message to the public and to local & national government.

The Bureau seeks proposals to provide training to Belarusian and Russian NGO leaders, trade union representatives and community leaders that will increase the visibility of their groups and strengthen their influence on local, regional and national levels. Proposals must indicate a practical and sophisticated knowledge of the political and NGO environment on the local, regional or national level in Belarus and Russia. Applicants should have established relationships with partner organizations for joint proposal development and program implementation.

NIS partner NGOs, organizations and institutions should be prepared to move beyond basic issues, such as organization and membership, and bring their message to a wider audience. Program components may include hands-on, intensive training workshops on issue advocacy; civic responsibility; good governance; grassroots political organizing; campaign management; accountability to constituencies; surveying; polling; advocacy; voter outreach, networking, message development, working with the media and fundraising.

Belarusian participants can greatly benefit from partnerships and networks developed in cross-border programs with other Central and Eastern European (CEE) countries, particularly Poland. Interested organizations may consider including experienced trainers from Poland or other CEE countries, to assist with training sessions on replicable and relevant public relations applications and methods. In these cases, existing partnerships and previous experience with the CEE organizations or trainers should be outlined in the proposal.

Public Advocacy Training for Joint Belarus/Russia, including CEE Cross-Border programs

• Participants in the training program should include both Belarusians and Russians.

• Programs may include Polish or CEE trainers for a cross-border component.

• Program components may take place in the U.S., Russia and/or Poland (or other CEE country).

• Program plans may include a component for a Small Grants Competition. This requires a detailed plan for recruitment and advertising; a sample application; a description of the proposal review and award mechanism; a plan for how the grantee would monitor and evaluate small grant activity; and the proposed amount for an average grant. Funds for the Small Grants Competition should be no more than 25% of the total requested from the Bureau.

Public Advocacy Training for Belarus, including CEE Cross-Border programs

• Participants in the training program should include only Belarusians.

• Cross-border programs may include Polish or CEE trainers.

• Program components should take place in the U.S. and/or Poland (or other CEE country).

• Program plans may include a component for a Small Grants Competition. This requires a detailed plan for recruitment and advertising; a sample application; a description of the proposal review and award mechanism; a plan for how the grantee would monitor and evaluate small grant activity; and the proposed amount for an average grant. Funds for the Small Grants Competition should be no more than 25% of the total requested from the Bureau.

Public Advocacy Training for Russia

• Participants in the training program should include only Russians.

• Program components may take place in the U.S. and/or Russia.

• Program plans may include a component for a Small Grants Competition. This requires a detailed plan for recruitment and advertising; a sample application; a description of the proposal review and award mechanism; a plan for how the grantee would monitor and evaluate small grant activity; and the proposed amount for an average grant. Funds for the Small Grants Competition should be no more than 25% of the total requested from the Bureau.

Prevention of Trafficking in Women and Girls for Belarus, Moldova and Russia

Overview

Trafficking in Women and Girls continues to be a serious problem globally, and particularly in the NIS. As the problem escalates, the need to educate girls, women, families and communities about trafficking increases. With the growing number of trafficked women repatriated to their home countries, there is also a greater need to broaden victim assistance efforts to include reintegration and occupational training. Current and past programs to combat trafficking in women and girls

funded by the international community and NIS-based initiatives, have resulted in model assistance programs, as well as publications, printed materials and multimedia products that can be used for public awareness and educational campaigns.

Prevention of Trafficking in Women and Girls can be addressed in single-country or multi-country programs and should reach a wide audience by building on the collective experience of previous campaigns and victim assistance efforts conducted in any of the NIS countries. Competitive proposals will focus on (1) public awareness and educational campaigns for girls, women, families and communities about trafficking, and/or (2) victim assistance, including reintegration and occupational training. Priority will go to programs that propose to reach risk groups, regions or countries where awareness campaigns and victim assistance initiatives have been limited or nonexistent.

For proposals focusing on educational campaigns and public awareness: The applicant must demonstrate knowledge of current and previous campaigns; explain in-detail how existing materials will be used to provide a highly effective program; exhibit an understanding of U.S. government priorities; describe how the applicant will integrate the program plan with initiatives of the U.S. Embassies' Public Affairs Sections in the NIS; and demonstrate how the program plan will complement other educational and public awareness campaigns. Emphasis should be on the actual implementation of an educational or public awareness campaign, in cooperation with several partner NGOs and organizations in the NIS. Program activities should, where possible, reach a regional or national audience. Program components may take place in Belarus, Moldova and/or Russia.

For proposals focusing on victim assistance, reintegration and occupational training: Program components may include, but are not limited to, crisis intervention; counseling and hotlines; viable job skills training courses appropriate to the local market; reintegration workshops; establishment of local NGO networks that can serve as resources for shelters and crisis centers; support for rehabilitation services; and professional training for staff of shelters, crisis centers, hotlines, NGO or employment resource centers, and job skills courses. Program components may take place in Belarus, Moldova, Russia and/or the U.S.

In addition to the above information, competitive proposals will address these guidelines:

- Applicants should check the State Department website for current information on the Prevention of Trafficking in Women and Girls on the International Information Programs website: *www.usinfo.state.gov/topical/global/traffic/* and the President's Interagency Council on Women website: *http://secretary.state.gov/www/picw/index.html*.
- Proposals should include sample educational and/or training materials and a description of how the materials will be integrated into proposed activities.
- Applicants may consider including experienced trainers from NIS or CEE countries to conduct training sessions or assist with educational campaigns. In these cases, existing partnerships and previous experience with the CEE organizations or trainers must be outlined in the proposal.
- The Bureau is particularly interested in proposals that will utilize the capacity of local NGOs and other organizations to assist with logistics, planning, and implementation of the local or regional educational and public awareness campaigns.
- Applicants should expect to work closely with Public Affairs Sections of the U.S. Embassies in the NIS on coordination of activities.
- Program plans may include small subcontracts with NIS organizations to cover costs for local logistics for outreach and educational or public awareness campaigns. When subcontracts are proposed, signed agreements with each organization or individual should be included in the proposal.
- Proposals must include a timeline for the entire proposed grant period, a schedule for each program component, subcontract agreements, resumes for each individual proposed in the program plan, and letters of support from NIS partner NGOs and other organizations.
- The program plan may include a Small Grants Competition for NIS NGOs and other organizations to conduct ongoing reintegration and occupational training workshops. This requires a detailed plan for outreach and advertising; a sample grant application; a description of the proposal review and award mechanism; a plan for how the U.S. grantee organization would monitor and evaluate small grant activity; and the proposed amount for an average grant. Funds for the Small Grants Competition should be no more than 25% of the total requested from the Bureau.

Selection of Participants

To be competitive, proposals should include a description of an open, merit-based participant selection process, including advertising, recruitment and selection. A sample application should be submitted with the proposal. Applicants should expect to carry out the entire selection process, but the Bureau and the Public Affairs Sections of the U.S. Embassies abroad should be consulted. The Bureau and the U.S. Embassies retain the right to nominate participants and to approve or reject participants recommended by the grantee institution. Priority must be given to foreign participants who have not traveled to the United States.

Visa Regulations

Foreign participants on programs sponsored by The Bureau are granted J–1 Exchange Visitor visas by the U.S. Embassy in the sending country. All programs must comply with J–1 visa regulations. Please refer to the Proposal Submission Instructions (PSI) for further information.

Project Funding

The funding available for NIS Exchanges and Training will be disbursed through grants to several organizations. Although no funding limit exists, organizations are strongly encouraged to submit proposals that do not exceed $130,000. Proposals that do not exceed $130,000 will be given priority. Organizations with less than four years of experience in managing international exchange programs are limited to $60,000.

Notice

The terms and conditions published in this RFP are binding and may not be modified by any Bureau representative. Explanatory information provided by the Bureau or program officers that contradicts published language will not be binding. Issuance of the RFP does not constitute an award commitment on the part of the U.S. Government. The Bureau reserves the right to reduce, revise, or increase proposal budgets in accordance with the needs of the program and the availability of funds. Awards made will be subject to periodic reporting and evaluation requirements. Organizations will be expected to cooperate with the Bureau in evaluating their programs under the principles of the Government Performance and Results Act (GPRA) of 1993, which requires federal agencies to measure and

report on the results of their programs and activities.

Final awards cannot be made until funds have been appropriated by Congress, allocated and committed through internal U.S. Department of State procedures.

Budget Guidelines

Applicants must submit a comprehensive line item budget based on the model in the Proposal Submission Instructions, but are encouraged to provide the optional separate sub-budgets for each program component, location or activity in order to facilitate decisions on funding. Applicants should include a budget narrative or budget notes for clarification of each line item.

Cost sharing: Since the Bureau's grant assistance constitutes only a portion of total project funding, proposals should list and provide evidence of other sources of cost sharing, including financial and in-kind support. Proposals with substantial private sector support from foundations, corporations, and other institutions will be considered highly competitive. Please refer to the statement on cost sharing in the Proposal Submission Instructions.

The following program costs are eligible for funding consideration:

1. *Transportation:* International and domestic airfares (per the Fly America Act), transit costs, ground transportation costs, and visas for U.S. participants to travel to the NIS countries (visas for NIS participants to travel to the U.S. for travel funded by the Bureau's grant assistance are issued at no charge).

2. *Per Diem:* For U.S.-based programming, organizations should use the published Federal per diem rates for individual U.S. cities. For activities in the NIS and Central Europe, the Bureau strongly encourages applicants to budget realistic costs that reflect the local economy.

Domestic per diem rates may be accessed at: *http://www.policyworks.gov/* and foreign per diem rates can be accessed at: *http://www.state.gov/www/perdiems/index.html.*

3. *Interpreters:* Local interpreters with adequate skills and experience may be used for program activities. Typically, one interpreter is provided for every four visitors who require interpreting, with a minimum of two interpreters. The Bureau grants do not pay for foreign interpreters to accompany delegations from their home country. Salary costs for local interpreters must be included in the budget. Costs associated with using their services may not exceed rates for U.S. Department of State interpreters. The Bureau strongly encourages applicants to use local interpreters. U.S. Department of State Interpreters may be used for highly technical programs with the approval of the Office of Citizen Exchanges. Proposal budgets should contain a flat $170/day per diem for each U.S. Department of State interpreter, as well as home-program-home air transportation of $400 per interpreter, reimbursements for taxi fares, plus any other transportation expenses during the program. Salary expenses are covered centrally and should not be part of an applicant's proposed budget.

4. *Book and cultural allowance:* Foreign participants are entitled to a one-time cultural allowance of $150 per person, plus a book allowance of $50. Interpreters should be reimbursed up to $150 for expenses when they escort participants to cultural events. U.S. program staff, trainers or participants are not eligible to receive these benefits.

5. *Consultants:* Consultants may be used to provide specialized expertise or to make presentations. Daily honoraria cannot exceed $250 per day. Subcontracting organizations may also be used, in which case the written agreement between the prospective grantee and subcontractor should be included in the proposal. Subcontracts should be itemized in the budget.

6. *Room rental:* Room rental may not exceed $250 per day.

7. *Materials development:* Proposals may contain costs to purchase, develop and translate materials for participants. The Bureau strongly discourages the use of automatic translation software for the preparation of training materials or any information distributed to the group of participants or network of organizations. Costs for good-quality translation of materials should be anticipated and included in the budget. Grantee organizations should expect to submit a copy of all program materials to the Bureau.

8. *Equipment:* Proposals may contain costs to purchase equipment for NIS-based programming such as computers, fax machines and copy machines. Costs for furniture are not allowed. Equipment costs must be kept to a minimum.

9. *Working meal:* Only one working meal may be provided during the program. Per capita costs may not exceed $5–8 for a lunch and $14–20 for a dinner, excluding room rental.

The number of invited guests may not exceed participants by more than a factor of two-to-one. Interpreters must be included as participants.

10. *Return travel allowance:* A return travel allowance of $70 for each foreign participant may be included in the budget. The allowance may be used for incidental expenses incurred during international travel.

11. *Health Insurance:* Foreign participants will be covered under the terms of a Bureau-sponsored health insurance policy. The premium is paid by the Bureau directly to the insurance company. Applicants are permitted to include costs for travel insurance for U.S. participants in the budget.

12. *Administrative Costs:* Costs necessary for the effective administration of the program may include salaries for grantee organization employees, benefits, and other direct and indirect costs per detailed instructions in the Application Package. While there is no rigid ratio of administrative to program costs, priority will be given to proposals whose administrative costs are less than twenty-five (25) per cent of the total requested from the Bureau. Proposals should show strong administrative cost-sharing contributions from the applicant, the NIS partner and other sources.

Please refer to the Proposal Submission Instructions (PSI) for complete budget guidelines.

Review Criteria

Technically eligible applications will be competitively reviewed according to the criteria stated below. Proposals should adequately address each area of review. These criteria are not rank ordered.

1. Program Planning and Ability to Achieve Objectives: Program objectives should be stated clearly and precisely and should reflect the applicant's expertise in the subject area and the region. Objectives should respond to the priority topics in this announcement and should relate to the current conditions in the included countries. Objectives should be reasonable and attainable. A detailed work plan should explain step-by-step how objectives will be achieved and should include a timetable for completion of major tasks. The substance of workshops, internships, seminars, presentations and/or consulting should be described in detail. Sample training schedules should be outlined. Responsibilities of in-country partners should be clearly described.

2. Institutional Capacity: The proposal should include (1) the U.S. institution's mission and date of establishment (2) detailed information about the NIS partner institution's capacity and the history of the U.S. and NIS partnership (3) an outline of prior awards—U.S. government and private support received for the target theme/

region (4) descriptions of experienced staff members who will implement the program. Proposed personnel and institutional resources should be adequate and appropriate to achieve the program's goals. The narrative should demonstrate proven ability to handle logistics. The proposal should reflect the institution's expertise in the subject area and knowledge of the conditions in the target country/region(s).

3. Cost Effectiveness and Cost Sharing: Overhead and administrative costs for the proposal, including salaries, honoraria and subcontracts for services, should be kept to a minimum. Administrative costs should be less than twenty-five (25) per cent of the total funds requested from the Bureau. Applicants are encouraged to cost share a portion of overhead and administrative expenses. Cost-sharing, including contributions from the applicant, the NIS partner, and other sources should be included in the budget.

4. Program Evaluation: Proposals must include a plan and methodology to evaluate the program's successes, both as the activities unfold and at the program's conclusion. The Bureau recommends that the proposal include a draft survey questionnaire or other technique (such as a series of questions for a focus group). The evaluation plan should show a clear link between program objectives and expected outcomes in the short-and medium-term, and provide a well-thought-out description of performance indicators and measurement tools.

5. Multiplier Effect/Impact: Proposals should show how the program will strengthen long-term mutual understanding and institutionalization of program goals. Applicants should describe how responsibility and ownership of the program will be transferred to the NIS participants to ensure continued activity and impact. Programs that include convincing plans for sustainability will be given top priority.

6. Follow-on Activities: Proposals should provide a plan for continued follow-on activity (beyond the Bureau grant period) ensuring that the Bureau-supported programs are not isolated events. Follow-on activities should be clearly outlined.

7. Support of Diversity: Proposals should demonstrate substantive support of the Bureau's policy on diversity. Program content (orientation, evaluation, program sessions, resource materials, follow-on activities) and program administration (selection process, orientation, evaluation) should address diversity in a comprehensive and innovative manner. Applicants should refer to The Bureau's Diversity, Freedom and Democracy Guidelines on page four of the Proposal Submission Instructions (PSI).

Diversity, Freedom and Democracy Guidelines

Pursuant to the Bureau's authorizing legislation, programs must maintain a non-political character and should be balanced and representative of the diversity of American political, social, and cultural life. ''Diversity'' should be interpreted in the broadest sense and encompass differences including, but not limited to ethnicity, race, gender, religion, geographic location, socio-economic status, and physical challenges. Applicants are strongly encouraged to adhere to the advancement of this principle both in program administration and in program content. Please refer to the review criteria under the 'Support for Diversity' section for specific suggestions on incorporating diversity into the total proposal. Public Law 104–319 provides that ''in carrying out programs of educational and cultural exchange in countries whose people do not fully enjoy freedom and democracy,'' the Bureau ''shall take appropriate steps to provide opportunities for participation in such programs to human rights and democracy leaders of such countries.'' Public Law 106—113 requires that the governments of the countries described above do not have inappropriate influence in the selection process. Proposals should reflect advancement of these goals in their program contents, to the full extent deemed feasible.

Review Process

The Bureau will acknowledge receipt of all proposals and will review them for technical eligibility. Proposals will be deemed ineligible if they do not fully adhere to the guidelines stated herein and in the Solicitation Package. All eligible proposals will be reviewed by the program office, as well as the Public Diplomacy section overseas, where appropriate. Eligible proposals will be forwarded to panels of Bureau officers for advisory review. Proposals may also be reviewed by the Office of the Legal Adviser or by other Department elements. Final funding decisions are at the discretion of the Department of State's Assistant Secretary for Educational and Cultural Affairs. Final technical authority for assistance awards (grants or cooperative agreements) resides with the Bureau's Grants Officer.

Deadline for Proposals

All copies must be received by the U.S. Department of State, Bureau of Educational and Cultural Affairs, by 5 p.m. Washington, D.C. time on Tuesday, December 19, 2000.

Faxed documents will not be accepted at any time. The mailroom closes at 5:00 p.m.; no late submissions will be accepted. Documents postmarked by December 19, 2000, but received at a later date, will not be accepted. Each applicant must ensure that the proposals are received by the above deadline.

To Download an Application Package Via the Internet

The entire Application Package may be downloaded from the Bureau's website at *http://exchanges.state.gov/education/rfps/.*

Submissions

Applicants must follow all instructions given in the Application Package. The applicant's original proposal and ten (10) copies (unbound) should be sent to: U.S. Department of State, Ref.: ECA/PE/C/EUR–01–19, Program Management, ECA/EX/PM, Room 336, 301 4th Street, S.W., Washington, D.C. 20547.

Once the RFP deadline has passed, Bureau staff may not discuss this competition in any way with applicants until the proposal review process has been completed.

For Further Information, Contact

By mail: United States Department of State, SA–44, Bureau of Educational and Cultural Affairs, Office of Citizen Exchanges (ECA/PE/C), Room 220, Washington, DC 20547 attn: NIS Exchanges & Training.

By phone: Tel: (202) 260–6230; fax: 202–619–4350, *By e-mail: nistraining@pd.state.gov.*

Interested applicants may request the Application Package, which includes the Request for Proposals (RFP) and the Proposal Submission Instructions (PSI). Please specify ''Europe/Eurasia Program Coordinator'' on all inquiries and correspondence. All potential applicants should read the complete announcement before sending inquiries or submitting proposals.

Notification

Final awards cannot be made until funds have been appropriated by Congress, allocated and committed through internal U.S. Department of State procedures.

Dated: October 8, 2000.

William B. Bader,

Assistant Secretary for Educational and Cultural Affairs, U.S. Department of State.

[FR Doc. 00–26364 Filed 10–18–00; 8:45 am]

BILLING CODE 4710–05–P

DEPARTMENT OF TRANSPORTATION

Federal Aviation Administration

[Summary Notice No. PE–2000–57]

Petitions for Exemption; Summary of Petitions Received; Dispositions of Petitions Issued

AGENCY: Federal Aviation Administration (FAA), DOT.

ACTION: Notice of petitions for exemption received and of dispositions of prior petitions.

SUMMARY: Pursuant to FAA's rulemaking provisions governing the application, processing, and disposition of petitions for exemption part 11 of Title 14, Code of Federal Regulations (14 CFR), this notice contains a summary of certain petitions seeking relief from specified requirements of the Federal Aviation Regulations (14 CFR Chapter I), dispositions of certain petitions previously received, and corrections. The purpose of this notice is to improve the public's awareness of, and participation in, this aspect of FAA's regulatory activities. Neither publication of this notice nor the inclusion or omission of information in the summary is intended to affect the legal status of any petition or its final disposition.

DATES: Comments on petitions received must identify the petition docket number involved and must be received on or before November 8, 2000.

ADDRESSES: Send comments on any petition in triplicate to: Federal Aviation Administration, Office of the Chief Counsel, Attn: Rule Docket (AGC–200), Petition Docket No. _____, 800 Independence Avenue, SW., Washington, DC 20591.

The petition, any comments received, and a copy of any final disposition are filed in the assigned regulatory docket and are available for examination in the Rules Docket (AGC–200), Room 915G, FAA Headquarters Building (FOB 10A), 800 Independence Avenue, SW., Washington, DC 20591; telephone (202) 267–3132.

FOR FURTHER INFORMATION CONTACT: Forest Rawls (202) 267–8033, or Vanessa Wilkins (202) 267–8029 Office of Rulemaking (ARM–1), Federal Aviation Administration, 800 Independence Avenue, SW., Washington, DC 20591.

This notice is published pursuant to sections 11.85 and 11.91 of part 11 of the Federal Aviation Regulations (14 CFR part 11).

Issued in Washington, DC, on October 13, 2000.

Donald P. Byrne,

Assistant Chief Counsel for Regulations.

Petitions for Exemption

Petitioner: Department of the Army.

[Docket No.: 24237]

Section of the 14 CFR Affected: 14 CFR §§ 91.177(a)(2) and 91.179(b)(1).

Description of Relief Sought: To permit the United States Army Special Operations Command (USASOC), 160th Special Operations Regiment (160th SOAR) to operate under Exemption No. 4371, as amended, when the 160th SOAR and the Air Force Special Operations Command (AFSOC) are conducting joint operations.

Petitioner: Experimental Aircraft Association, Small Aircraft Manufacturers Association and National Association of Flight Instructors.

[Docket No.: 29661]

Section of the 14 CFR Affected: 14 CFR § 91.319(a)(1) and (2).

Description of Relief Sought: To allow (1) the revision of Condition No. 1 to include aircraft that operate under the provisions of 14 CFR § 21.191(c), (d), and (f); (2) the revision of Condition No. 4 to include ground transition training in the required training syllabus; and (3) the addition of a new condition requiring EAA, SAMA, and NAFI members to receive permission from their appropriate association prior to conducting flight training under the conditions and imitations of Exemption No. 7162.

Petitioner: Flying Boat, Inc. dba Chalk's International Airlines and Chalk's Ocean Airways.

[Docket No.: 30161]

Section of the 14 CFR Affected: 14 CFR §§ 121.344a(f) and 135.152(k).

Description of Relief Sought: To permit Chalk to operate its Grumman G–73T Turbine Mallard (G–73T) airplane under parts 121, and 135 without the required digital flight data recorder (DFDR) until the FAA can amend §§ 121.344a(f) and 131.152(k) to permanently except the G–73T airplane from the requirements of §§ 121.344a(f) and 135.152(k).

[FR Doc. 00–26829 Filed 10–18–00; 8:45 am]

BILLING CODE 4910–13–M

DEPARTMENT OF TRANSPORTATION

Federal Aviation Administration

[Summary Notice No. PE–2000–58]

Petitions for Exemption; Summary of Petitions Received; Dispositions of Petitions Issued

AGENCY: Federal Aviation Administration (FAA), DOT.

ACTION: Notice of petitions for exemption received and of dispositions of prior petitions.

SUMMARY: Pursuant to FAA's rulemaking provisions governing the application, processing, and disposition of petitions for exemption Part 11 of Title 14, Code of Federal Regulations (14 CFR), this notice contains a summary of certain petitions seeking relief from specified requirements of the Federal Aviation Regulations (14 CFR Chapter I), dispositions of certain petitions previously received, and corrections. The purpose of this notice is to improve the public's awareness of, and participation in, this aspect of FAA's regulatory activities. Neither publication of this notice nor the inclusion or omission of information in the summary is intended to affect the legal status of any petition or its final disposition.

DATES: Comments on petitions received must identify the petition docket number involved and must be received on or before November 8, 2000.

ADDRESSES: Send comments on any petition in triplicate to: Federal Aviation Administration, Office of the Chief Counsel, Attn: Rule Docket (AGC–200), Petition Docket No. _____, 800 Independence Avenue, SW., Washington, DC 20591.

The petition, any comments received, and a copy of any final disposition are filed in the assigned regulatory docket and are available for examination in the Rule Docket (AGC–200), Room 915G, FAA Headquarters Building (FOB 10A), 800 Independence Avenue, SW, Washington, DC 20591; telephone (202) 267–3132.

FOR FURTHER INFORMATION CONTACT: Forest Rawls (202) 267–8033, or Vanessa Wilkins (202) 267–8029 Office of Rulemaking (ARM–1), Federal Aviation Administration, 800 Independence Avenue, SW, Washington, DC 20591.

This notice is published pursuant to § 11.85 and 11.91 of Part 11 of the Federal Aviation Regulations (14 CFR Part 11).

Issued in Washington, DC, on October 13, 2000.

Donald P. Byrne,

Assistant Chief Counsel for Regulations.

Dispositions of Petitions

Docket No.: 30130.

Petitioner: North Jersey Chapter of the Ninety-Nines, Inc.

Section of the 14 CFR Affected: 14 CFR §§ 135.251, 135.255, 135.353, and appendixes I and J to part 121.

Description of Relief Sought/ Disposition: To permit NJNN to conduct local sightseeing flights in the vicinity of Lincoln Park, New Jersey, for its one-day Pennies-a-Pound event in October 2000, for compensation or hire, without complying with certain anti-drug and alcohol prevention requirements of part 135.

Grant, 09/21/00, Exemption No. 7356

Docket No.: 30144.

Petitioner: Mr. Milford Dwaine Byrd and Monroe Full Gospel Church.

Section of the 14 CFR Affected: 14 CFR §§ 135.251, 135.255, 135.353, and appendixes I and J to part 121.

Description of Relief Sought/ Disposition: To permit Mr. Byrd and MFGC to conduct local sightseeing flights at Custer Airport, Monroe, Michigan, for two FunFlight events in October 2000, for compensation or hire, without complying with certain anti-drug and alcohol misuse prevention requirements of part 135.

Grant, 09/21/00, Exemption No. 7355

Docket No.: 29228.

Petitioner: PSA Airlines, Inc.

Section of the 14 CFR Affected: 14 CFR §§ 121.433(c)(1)(iii), 121.441(a)(1) and (b), and appendix F to part 121.

Description of Relief Sought/ Disposition: To permit PSA to combine recurrent flight and ground training and proficiency checks for PSA's flight crewmembers into a single annual training and proficiency evaluation program, that is a single-visit training program.

Grant, 10/02/00, Exemption 6821A

Docket No.: 29360.

Petitioner: Skydive City, Inc.

Section of the 14 CFR Affected: 14 CFR 105.43(a).

Description of Relief Sought/ Disposition: To permit SCI to allow nonstudent foreign nationals to participate in SCI-sponsored parachute jumping events held at SCI's facilities without complying with the parachute equipment and packing requirements of § 105.43(a).

Grant, 10/02/00, Exemption No. 6870A

Docket No.: 30097.

Petitioner: Federal Aviation Administration, Aviation System Standards.

Section of the 14 CFR Affected: 14 61.3(a) and (c).

Description of Relief Sought/ Disposition: To permit FAA AVN pilot crewmembers to be issued facsimiles of their pilot and medical certificates when those certificates are lost, destroyed, or misplaced.

Grant, 10/03/00, Exemption No. 74363

[FR Doc. 00–26830 Filed 10–18–00; 8:45 am]

BILLING CODE 4910–13–M

DEPARTMENT OF TRANSPORTATION

Federal Aviation Administration

[Summary Notice No. PE–2000–59]

Petitions for Exemption; Summary of Petitions Received; Dispositions of Petitions Issued

AGENCY: Federal Aviation Administration (FAA), DOT.

ACTION: Notice of petitions for exemption received and of dispositions of prior petitions.

SUMMARY: Pursuant to FAA's rulemaking provisions governing the application, processing, and disposition of petitions for exemption part 11 of Title 14, Code of Federal Regulations (14 CFR), this notice contains a summary of certain petitions seeking relief from specified requirements of the Federal Aviation Regulations (14 CFR Chapter I), dispositions of certain petitions previously received, and corrections. The purpose of this notice is to improve the public's awareness of, and participation in, this aspect of FAA's regulatory activities. Neither publication of this notice nor the inclusion or omission of information in the summary is intended to affect the legal status of any petition or its final disposition.

DATES: Comments on petitions received must identify the petition docket number involved and must be received on or before November 8, 2000.

ADDRESSES: Send comments on any petition in triplicate to: Federal Aviation Administration, Office of the Chief Counsel, Attn: Rule Docket (AGC–200), Petition Docket No. _____, 800 Independence Avenue, SW., Washington, DC 20591.

The petition, any comments received, and a copy of any final disposition are filed in the assigned regulatory docket and are available for examination in the Rules Docket (AGC–200), Room 915G, FAA Headquarters Building (FOB 10A), 800 Independence Avenue, SW., Washington, DC 20591; telephone (202) 267–3132.

FOR FURTHER INFORMATION CONTACT: Forest Rawls (202) 267–8033, or Vanessa Wilkins (202) 267–8029 Office of Rulemaking (ARM–1), Federal Aviation Administration, 800 Independence Avenue, SW., Washington, DC 20591.

This notice is published pursuant to sections 11.85 and 11.91 of part 11 of the Federal Aviation Regulations (14 CFR part 11).

Issued in Washington, DC, on October 13, 2000.

Donald P. Byrne,

Assistant Chief Counsel for Regulations.

Dispositions of Petitions

Petitioner: American Airlines, Inc.

[Docket No.: 18324]

Section of the 14 CFR Affected: 14 CFR §§ 43.3(a) and 121.709(b)(3)

Description of Relief Sought/ Disposition: To permit American to allow its properly trained and certificated flight engineers to stow passenger supplemental oxygen masks during flight and to make the appropriate entry in the aircraft maintenance logbook. *Grant, 10/02/00, Exemption No. 2678L.*

Petitioner: Chromalloy Gas Turbine Corporation

[Docket No.: 28557]

Section of the 14 CFR Affected: 14 CFR §§ 43.9(a)(4), 43.11(a)(3), and 145.57(a)

Description of Relief Sought/ Disposition: To permit Chromalloy and other persons holding return-to-service authority under the relevant, respective Inspection Procedures Manuals (IPMs) to use electronic signatures in lieu of physical signatures to satisfy the signature requirements of FAA Form 8130–3, Airworthiness Approval Tag. *Grant, 09/29/00, Exemption No. 6513B.*

Petitioner: MD Helicopters, Inc.

[Docket No.: 30085]

Section of the 14 CFR Affected: 14 CFR § C36.105(c)(1)

Description of Relief Sought/ Disposition: To permit an additional alternative flyover airspeed criteria for use in the 14 CFR part 36 (part 36) noise certification. The petitioner is requesting the alternative level flyover reference airspeed by 90 percent of the never-exceed airspeed, (0.9 V_{NE}), for the Model MD900 helicopter noise certification. *Grant, 09/27/00, Exemption No. 7360.*

Petitioner: All West Freight, Inc.

[Docket No.: 30182]

Section of the 14 CFR Affected: 14 CFR § 135.143(c)(2)

Description of Relief Sought/ Disposition: To permit All West to operate certain aircraft under part 135 without a TSO–C112 (Mode S) transponder installed in the aircraft. *Grant, 09/26/00, Exemption No. 7358.*

Petitioner: David J. Wilder dba Lake and Peninsula Airlines, Inc.

[Docket No.: 30181]

Section of the 14 CFR Affected: 14 CFR § 135.143(c)(2)

Description of Relief Sought/ Disposition: To permit LPAI to operate certain aircraft under part 135 without a TSO–C112 (Mode S) transponder installed in the aircraft. *Grant, 09/26/00, Exemption No. 7357.*

Petitioner: Chautauqua Airlines, Inc.

[Docket No.: 29182]

Section of the 14 CFR Affected: 14 CFR § 121.434(c)(1)(ii)

Description of Relief Sought/ Disposition: To permit Chautaugua to substitute a qualified and authorized check airman in place of an FAA inspector to observe a qualifying PIC who is completing initial or upgrade training specified in § 121.424 during at least one flight leg that includes a takeoff and a landing. *Grant, 09/22/00, Exemption No. 7353.*

[FR Doc. 00–26831 Filed 10–18–00; 8:45 am]

BILLING CODE 4910–13–M

DEPARTMENT OF TRANSPORTATION

Federal Aviation Administration

Executive Committee of the Aviation Rulemaking Advisory Committee; Meeting

AGENCY: Federal Aviation Administration (FAA), DOT.

ACTION: Notice of meeting.

SUMMARY: The FAA is issuing this notice to advise the public of a meeting of the Executive Committee of the Federal Aviation Administration Aviation Rulemaking Advisory Committee.

DATES: The meeting will be held November 9, 2000 at 11 a.m.

ADDRESSES: The meeting will be held at the Federal Aviation Administration, 800 Independence Ave., SW., Room 1014, Washington, DC 20590.

FOR FURTHER INFORMATION CONTACT: Regina Jones, Federal Aviation Administration, 800 Independence Avenue, SW., Washington, DC 20591, telephone (202) 267–9822; fax (202) 267–5075; e-mail Regina.Jones@faa.gov.

SUPPLEMENTARY INFORMATION: Pursuant to section 10(a)(2) of the Federal Advisory Committee Act (Pub. L. 92–463; 5 U.S.C. App. II), notice is hereby given of a meeting of the Executive Committee to be held on November 9, 2000, at the Federal Aviation Administration, 800 Independence Ave., SW., Room 1014, Washington, DC 20590. The agenda will include:

- Modification to Operating Procedures
- Nominations for General Aviation and Business Airplanes Assistant Chair
- Status Report Fuel Tank Inerting working group

Attendance is open to the interested public but will be limited to the space available. The public must make arrangements by November 2, to present oral statements at the meeting. The public may present written statements to the executive committee at any time by providing 25 copies to the Executive Director, or by bringing the copies to the meeting.

If you are in need of assistance or require a reasonable accommodation for this meeting, please contact the person listed under the heading **FOR FURTHER INFORMATION CONTACT.**

Issued in Washington, DC, on October 11, 2000.

Anthony F. Fazio,

Executive Director, Aviation Rulemaking Advisory Committee.

[FR Doc. 00–26826 Filed 10–18–00; 8:45 am]

BILLING CODE 4910–13–M

DEPARTMENT OF TRANSPORTATION

Federal Aviation Administration

RTCA Special Committee 165; Minimum Operational Performance Standards for Aeronautical Mobile Satellite Services

Pursuant to section 10(a)(2) of the Federal Advisory Committee Act (P.L. 92–463, 5 U.S.C., Appendix 2), notice is hereby given for Special Committee (SC)–165 meeting to be held November 2, 2000, starting at 9:00 a.m. The meeting will be held at RTCA, 1140 Connecticut Avenue, NW., Suite 1020, Washington, DC 20036.

The agenda will include: (1) Welcome and Introductory Remarks; (2) Approval of Summary from Previous meeting; (3) Chairman's Remarks; (4) Review of SC–165 Working Group Activities: (a) Working Group (WG)–1 (AMS(R)S Avionics Equipment MOPS); (b) WG–3 (AMS(R)S MASPS); (5) Achieve Consensus on Proposed Change No. 1 to RTCA DO–210D; (6) Overview of Related activities; (c) AEEC 741 and 761 Characteristics; (d) EUROCAE WG–55; (e) AMS(R)S Spectrum Issues; (f) ICAO Aeronautical Mobile Communications Panel; (g) Industry, Users, Government; (7) Other Business; (8) Date and Location of Next Meeting; (9) Closing.

Attendance is open to the interested public but limited to space availability. With the approval of the chairman, members of the public may present oral statements at the meeting. Persons wishing to present statements or obtain information should contact the RTCA Secretariat, 1140 Connecticut Avenue, NW., Suite 1020, Washington, DC 20036; (202) 833–9339 (phone); (202) 833–9434 (fax); or http://www.rtca.org (web site). Members of the public may present a written statement to the committee at any time.

Issued in Washington, DC, on October 11, 2000.

Jane P. Caldwell,

Designated Official.

[FR Doc. 00–26828 Filed 10–18–00; 8:45 am]

BILLING CODE 4910–13–U

DEPARTMENT OF TRANSPORTATION

Federal Aviation Administration

Passenger Facility Charge Audit Guide for Public Agencies—Procedures for Examining Public Agency Passenger Facility Charge Revenue

AGENCY: Federal Aviation Administration, Department of Transportation.

ACTION: Notice of availability.

SUMMARY: The Federal Aviation Administration (FAA) is issuing guidance for conducting annual audits of public agency Passenger Facility Charge (PFC) revenue. Beginning in the year that PFC revenues are first collected by air carriers on behalf of a public agency, such public agencies approved for PFC collection are required to provide an annual independent audit of PFC revenue. Use of the guidance is voluntary and is not the sole means of complying with the audit requirements. However, the FAA will have greater confidence in audits conducted in accordance with the guide.

Interested parties may access the Passenger Facility Charge Audit Guide for Public Agencies through the Internet at *http://www.faa.gov/arp/530home.htm.* Alternatively, the guide may be obtained by contacting the individual listed below under the heading **FOR FURTHER INFORMATION CONTACT.**

DATES: Guidance effective November 20, 2000.

FOR FURTHER INFORMATION CONTACT: Joseph Hebert, Program Analyst,

Passenger Facility Charge Branch, Airports Financial Assistance Division (APP–530), Federal Aviation Administration, 800 Independence Avenue, SW., Washington, DC 20591, (202) 267–3845.

SUPPLEMENTARY INFORMATION: Title 49 of the United States Code (U.S.C.), section 40117, authorizes the Secretary of Transportation (further delegated to the FAA Administrator) to approve the local imposition of a PFC of $1, $2, $3, $4, or $4.50 per enplaned passenger for use on certain airport projects. Legislation effecting PFC charge levels and criteria for approvals, enacted shortly before the issuance of this notice, provides for the PFC level to increase to $4 or $4.50. The increased PFC level is contingent on a public agency demonstrating that it meets certain additional approval criteria. Certain of these criteria apply only to medium and large hub airports. On May 29, 1991, the FAA issued 14 Code of Federal Regulations (CFR) part 158 outlining policies and procedures for the PFC program. On May 30, 2000, the FAA issued a final rule to amend part 158 to allow, among other things, an increase in the PFC level to $4 or $4.50. The final rule also included additional criteria for the approval of the higher PFC levels.

Under part 158, public agencies controlling commercial service airports can apply to the FAA for authority to impose and/or use a PFC to finance approved, eligible airport-related projects. Section 158.3 defines a public agency to be a state or any agency or one or more states; a municipality or other political subdivision of a state; an authority created by Federal, state, or local law; a tax-supported organization; or an Indian tribe or pueblo that controls a commercial service airport. A private entity controlling an airport participating in the Pilot Program for Private Ownership of Airports (49 U.S.C. 47134) may also apply to impose a PFC.

The FAA must issue a final decision approving or disapproving a PFC application, in whole or in part, no later than 120 days after the application is received by the FAA from the public agency (section 158.27(c)(4)). Following the FAA's full or partial approval of an application to impose a PFC, the public agency must notify air carriers and foreign air carriers required to collect PFC's at its airport(s) of the FAA's approval. The charge effective date of the PFC collection is the first day of a month which is at least 60 days from the date the public agency notifies the carriers of approval to impose the PFC. Air carriers collecting PFC's are required by section 158.51 to remit the revenue collected to the appropriate public agency on a monthly basis. PFC revenue collected by the carrier shall be remitted to the public agency no later than the last day of the calendar month following the month in which the PFC was collected (or if that date falls on a weekend or holiday, the first business day thereafter).

Beginning in the year that PFC revenues are first collected by air carriers on behalf of a public agency, such public agencies approved for PFC collection are required by section 158.67(c) to provide an annual independent audit of PFC revenue. Auditors engaged to audit PFC programs are required to ''express an opinion of the fairness and reasonableness of the public agency's procedures for receiving, holding, and using PFC revenue.'' In addition, auditors must report whether the quarterly reports filed by the public agencies under section 158.63(a) ''fairly represent the net transactions within the PFC account.''

The PFC audit can be performed separately and specifically for the PFC program or as part of an audit conducted under the Single Audit Act (as amended). This latter option allows the examination of PFC revenues during the performance of a Single Audit Act audit, although PFC revenues are not considered to be Federal financial assistance as defined by OMB Circular A–133 and the requirements of the A–133 Compliance Supplement do not apply to the PFC program. Due to inconsistencies between the PFC program and the requirements of A–133, PFC revenues should be reported on a separate schedule and findings and questioned costs relating to PFC's should be called out separately. Only in the case where a project is jointly funded with Federal funds and PFC revenues would the requirements of A–133 also apply to an audit of PFC revenues.

To facilitate the conduct of audits that meet the requirements of the statute and regulation, the FAA has prepared the ''Passenger Facility Charge Audit Guide for Public Agencies.'' The procedures contained in the guide for testing and reporting on PFC's received, held, and used during the year are intended to assist the auditor in meeting audit requirements. This guide is not intended to supplant the auditor's judgment of procedures to be performed. The auditor should use professional judgment to tailor the procedures so that the audit objectives are achieved. However, the auditor must address all applicable compliance requirements.

The guidance describes the receipt, holding, use, and reporting requirements of part 158. The suggested format is similar to that used in the FAA Airport Improvement Program supplement to OMB Circular A–133 and should appear familiar to auditors. The use of this guide by auditors on behalf of the public agencies will provide the FAA, air carriers, and the public with an acceptable level of assurance that the public agency has followed regulatory procedures or, through the audit process, noted weaknesses in its policies and procedures, and has or will take corrective action to improve its process.

Although the guide is not intended to define the sold method of complying with the audit requirements of section 158.67(c), the FAA has determined that the use of procedures in this audit guide by the auditors for a public agency will provide sufficient assurance that the public agency has met the requirements of part 158 such that the FAA would not normally require additional reports, undertake an audit of the public agency, or request Department of Transportation, Office of the Inspector General (DOT OIG), intervention on the FAA's behalf. This guidance shall not, however, foreclose other FAA options for responding to and enforcing correct holding and use procedures. The FAA expects public agencies to attain a reasonable level of accuracy with regard to PFC remittances.

Issued in Washington, DC on October 11, 2000.

Catherine M. Lang,

Director, Office of Airport Planning and Programming.

[FR Doc. 00–26827 Filed 10–18–00; 8:45 am]

BILLING CODE 4910–13–M

DEPARTMENT OF TRANSPORTATION

Federal Railroad Administration

[FRA Docket No. 87–2, Notice. No. 9]

RIN 2130–AB20

Automatic Train Control (ATC) and Advanced Civil Speed Enforcement System (ACSES); Northeast Corridor (NEC) Railroads

AGENCY: Federal Railroad Administration (FRA), Department of Transportation (DOT).

ACTION: Amendments to Order of Particular Applicability Requiring ACSES Between New Haven, Connecticut and Boston,

Massachusetts—New Implementation Schedule and Technical Changes

SUMMARY: FRA amends an Order of Particular Applicability (Order) (July 22, 1998, 63 FR 39343), that requires all trains operating on the Northeast Corridor (NEC) between New Haven, Connecticut and Boston, Massachusetts (NEC-North End) to be equipped to respond to the new Advanced Civil Speed Enforcement System (ACSES) system. The amendments include a new implementation schedule and technical changes.

DATES: The amended Order is effective October 19, 2000.

FOR FURTHER INFORMATION CONTACT: W. E. Goodman, Staff Director, Signal and Train Control Division, Office of Safety, Mail Stop 25, FRA, 1120 Vermont Avenue, NW., Washington, DC, 20005 ((202) 493–6325), Paul Weber, Railroad Safety Specialist, Signal and Train Control Division, Office of Safety, Mail Stop 25, FRA, 1120 Vermont Avenue, NW., Washington, DC, 20005 ((202) 493–6268), or Patricia V. Sun, Office of Chief Counsel, Mail Stop 10, 1120 Vermont Avenue, NW., Washington, DC, 20005 ((202) 493–6038).

SUPPLEMENTARY INFORMATION: The Order, as issued on July 22, 1998, set performance standards for cab signal/automatic train control and ACSES systems, increased certain maximum authorized train speeds, and contained safety requirements supporting improved rail service on the NEC. Among other requirements, the Order required all trains operating on track controlled by the National Railroad Passenger Corporation (Amtrak) between New Haven, Connecticut and Boston, Massachusetts (NEC-North End) to be controlled by locomotives equipped to respond to ACSES by October 1, 1999. In a later notice, FRA reset the compliance date for trains operating on the NEC-North End to March 21, 2000, based on information from Amtrak (64 FR 54410, October 6, 1999).

Implementation Schedule and Technical Changes

FRA is making the amendments to this order effective upon publication instead of 30 days after the publication date in order to realize the significant safety and transportation benefits afforded by the ACSES system at the earliest possible time and because no one will be disadvantaged or harmed by the lack of additional notice. Implementation of ACSES on the NEC will provide significant safety and transportation benefits: train speeds of up to 150 miles per hour; a high-speed diverging signal aspect at 80 miles per hour; more efficient handling of both high-speed and conventional trains; new intermediate speeds between 45 miles per hour and 150 miles per hour; the capability for headway improvement in congested commuter areas; and practical staging from present wayside and on-board equipment.

Moreover, as recited above, the basic Order which this Order amends has been in effect since July 22, 1998, and all railroads using the NEC have known the requirements to which they are subject since then. The most recent prior amendment of the Order contemplated use of ACSES north of New Haven, Connecticut, beginning March 21, 2000 and all of the affected railroads aimed to meet that date. Amtrak has represented to FRA that, with the exception of railroads aimed to meet that date. Amtrak has represented to FRA that, with the exception of CSX, all of the operating personnel of each railroad using the NEC have been trained in the use of ACSES and all of the locomotives used by those railroads on the NEC are equipped to use ACSES. CSX employees will be trained prior to implementation of ACSES in the territory in which they operate (Attleboro, Massachusetts to Boston); the amended implementation schedule does not require CSX to complete this training until November 13, 2000. Thus, no one will be disadvantaged or harmed by the lack of additional notice.

On September 25, 2000, Amtrak sent letters to the Providence and Worcester Railroad Company, CSX Transportation (CSX), Connecticut Department of Transportation, and Massachusetts Bay Transportation Authority advising them of the dates on which ACSES will be implemented in the territories where their trains operate, and notifying them that their engines must be equipped and employees trained by those dates.

Amtrak has informed FRA that affected railroads should be ready to implement ACSES according to the schedule below. If there are any changes to the dates listed, Amtrak will provide a minimum of seven days notification to all NEC users prior to cut over.

1. Milepost 139.3 (Stonington, Connecticut) to Milepost 181.0 (Cranston, Rhode Island) on October 21, 2000
2. Milepost 187.0 (Lawn, Rhode Island) to Milepost 218.5 (Transfer, Massachusetts) on November 13, 2000
3. Milepost 113.3 (Nan, Connecticut) to Milepost 139.0 (High St., Rhode Island) on November 27, 2000
4. Milepost 181.0, Cranston, Rhode Island to Milepost 187.0 (Lawn, Rhode Island) and Milepost 218.5 (Transfer, Massachusetts) to Milepost 228.0 (Cove, Massachusetts) on December 18, 2000
5. Milepost 73.6 (Mill River, Connecticut) to Milepost 113.3 (Nan, Connecticut) on January 15, 2001

Work will continue on this major improvement project to facilitate train service at speeds up to 150 miles per hour (mph). Amtrak has submitted a revised highway-rail crossing plan for the 11 remaining highway-rail at grade crossings on the NEC-North End.

FRA has also amended the Order to set February 1, 2001, as the anticipated date for ACSES implementation between Washington, D.C, and New York, New York (NEC-South End). FRA will amend the Order if this date changes as work on the NEC-South End progresses.

FRA has been communicating with Amtrak as work on the project progresses. In addition to the amended implementation schedule, Amtrak has suggested several technical changes to the Order to make it clearer and more accurate. FRA agrees with these suggestions and is modifying the Order accordingly; each change is discussed below.

Since these modifications are merely technical changes, FRA is not reopening the comment period. Providing an additional comment period on the amended implementation schedule would be impractical, unnecessary and contrary to the public interest. The schedule is based on the readiness of particular track segments for implementation, a subject on which Amtrak has provided the most current information. Delay in implementing that schedule would be contrary to the public interest because it would postpone the delivery of substantial safety and operational benefits that the system will provide as explained above.

For purposes of readability, FRA is reprinting the amended Order in its entirety.

Scope and Applicability

The Order had incorrectly stated that all trains are to be equipped with ACSES ''from mile post 73.2 at New Haven, Connecticut to South Station, Boston, Massachusetts.'' Extension of ACSES into and west of Mill River Interlocking would involve trains operating to Springfield, Massachusetts, and extension of ACSES into and east of Cove interlocking would involve trains operating to Framingham, Worcester, and Springfield, Massachusetts; and to Albany, New York and west. These routes are not covered by this first phase of the ACSES program.

FRA now corrects the Order to conform with the first phase of ACSES which, as planned, starts at Milepost 73.6 (the east end of Mill River Interlocking) and ends at Milepost 228.0 (the west end of Cove Interlocking). The maximum authorized speed planned over the 1.3 miles between Mill River (Milepost 73.6) and New Haven (Milepost 72.3) is 50 miles per hour. The maximum authorized speed over the 0.7 miles between Cove (Milepost 228.0) and South Station, Boston (Milepost 228.7) is 30 miles per hour within Cove Interlocking and 15 miles per hour east of Cove to South Station.

Performance Standards

Paragraph 1

The Order contains the following sentence: ''Permanent restrictions shall be loaded into the onboard computer by direct data transfer from a verified database.'' Amtrak asked for clarification, since under ACSES, permanent restrictions will be loaded into individual transponders directly from verified data messages prepared from a verified database. As a locomotive traverses the territory, its onboard computer is designed to receive messages from the transponders in a timely manner. FRA will accordingly reword the relevant sentence in Paragraph 1 to read ''Permanent restrictions will be loaded into the individual transponders directly from verified data messages prepared from a verified database.''

Paragraph 6a

Amtrak recommended that FRA completely revise paragraph 6a of the Performance Standards to make it more compatible with current Northeast Operating Rules Advisory Committee (NORAC) operating rules and better explain the use of data radios in releasing the positive stop when conditions warrant. FRA agrees with this recommendation and will revise the paragraph to read as follows:

Failure of cab Signal/ATC System: In the event of failure of the cab signal/ATC system on board a train, the cab signal/ATC system will be cut out; however ACSES will remain operative and enforce a 79 mph speed limit, and the positive stop at home signals displaying an absolute stop. Movement will be made according to the operating rules that apply to cab signal/ATC failures. Release of the positive stop at home signals displaying an aspect more favorable than stop will be provided through a data radio, with information derived from the interlocking circuitry. In territory without fixed automatic block signals, release of the positive stop will not be provided by the data radio unless ''Clear to Next Interlocking'' signal is displayed. Until wayside and on board data radios are in service, ACSES may be cut out following an on board cab signal/ATC failure, to avoid unnecessary positive stop enforcement at home signals displaying an aspect more favorable than absolute stop.

Paragraph 6e

Amtrak suggested that the sentence ''If the missing transponder is a positive stop enforcement transponder at the distant signal to an interlocking, then the system will treat the missing transponder as if it were present and a stop will be required'' is misleading. Amtrak notes that while it is true that a stop will be required due to the redundancy of the transponder set encountered prior to reaching the transponder set at the distant signal, the system will not treat the missing transponder as if it were present, but will instead generate a ''missing transponder alarm.'' If a transponder were missing, the 125 mph speed restriction will always be enforced by the ATC, but the 110 mph restriction between New Haven and Boston will be required by NORAC rules when the transponder missing alarm is received and acknowledged. FRA therefore corrects the wording of the sentence in question to read ''If the missing transponder is a positive stop enforcement transponder at the distant signal to an interlocking, the redundancy of the transponder set encountered prior to reaching the location of the transponder set at the distant signal will require a stop when necessary.''

Paragraph 9a

Amtrak submitted a revised highway-rail crossing plan for the NEC—North End updating the status of the remaining highway-rail at grade crossings between New Haven and Boston, all in Connecticut. The only crossing in Rhode Island, Wolf's Rock Road at Milepost 160.3, was closed on November 1, 1999. Amtrak installed four quadrant gates with loop detectors controlling the exit gates at the School Street crossing at Milepost 131.2 and the Broadway Extension crossing at Milepost 132.3. Amtrak anticipates installing four quadrant gates at the Palmer's Street crossing at Milepost 140.6 on October 21, 2000. Amtrak will complete additional improvements as funding becomes available.

Accordingly, for the reasons stated in the preamble, FRA amends the Order to read as follows:

Final Order of Particular Applicability

Authority: 49 U.S.C. 20103, 20107, 20501–20505 (1994); and 49 CFR 1.49(f), (g), and (m).

Scope and Applicability

This order supplements existing regulations at 49 CFR Part 236 and existing orders for automatic train control on track controlled by the National Railroad Passenger Corporation (Amtrak) on the Northeast Corridor (NEC). This order applies in territory where Amtrak has installed wayside elements of the Advanced Civil Speed Enforcement System (ACSES), permitting high-speed operations under the conditions set forth below.

All railroads operating on high-speed tracks in such equipped territory between Boston, Massachusetts and New Haven, Connecticut (NEC—North End), or on tracks providing access to such high-speed tracks, shall be subject to this order, including the following entities operating or contracting for the operation of rail service—Amtrak;

Connecticut Department of Transportation;

Consolidated Rail Corporation and its successors;

Massachusetts Bay Transportation Authority; and

Providence and Worcester Railroad Company.

The requirement that all trains be equipped with operative on-board ACSES applies as specified in paragraph (2) from Milepost 73.6 (the east end of Mill River Interlocking) to Milepost 228.0 (the west end of Cove Interlocking), but applies only to high-speed trains operating on high-speed tracks between Washington, D.C, and New York, New York (NEC—South End), as set forth in paragraph 9(b).

Definitions

Unless otherwise provided terms used in this order have the same definitions contained in Part 236. For purposes of this order—

''ACSES'' means a transponder-based system that operates independent of the cab signal system, and provides enforcement of permanent speed restrictions, temporary speed restrictions, and stop signals at interlockings.

''High-speed train'' means a train operating in excess of 125 miles per hour (mph) on the NEC—South End, and 110 mph on the NEC—North End.

''High-speed track'' means (1) a track on the main line of the NEC—South End, where the authorized train speed for any class of train exceeds 125 mph, or (2) a track on the main line of the NEC—North End where the maximum authorized train speed for any class of train is in excess of 110 mph.

''Immediately adjacent track'' means a track within 30 feet of a high-speed track when measured from track center to track center.

''Signal and train control system'' refers to the automatic cab signal/automatic train control system (cab signal/ATC) in effect on the NEC at the date of issuance of this order, as supplemented by ACSES, together with such modifications as Amtrak shall make consistent with this order.

Performance Standards

Effective October 21, 2000, the following performance standards and special requirements shall apply, except for paragraph 9(b), which shall apply February 1, 2001.

1. Except as provided in paragraph 9(b), the signal and train control system shall enforce both permanent and temporary civil speed restrictions (*e.g.,* track curvature, bridges, and slow orders) on all high-speed tracks and immediately adjacent tracks. Permanent restrictions will be loaded into the individual transponders directly from verified data messages prepared from a verified database. Temporary restrictions shall be loaded into the onboard computer by direct data transfer from the computer-aided dispatching system. (For not to exceed 12 months following cut-in of the system, use of temporary transponders programmed with appropriate speed restrictions will be deemed to satisfy this paragraph. Thereafter, use of temporary transponders alone shall be acceptable only in the case of an emergency restriction for which transfer of the restriction into the onboard computers of all affected trains is not practicable.)

2. Except as provided in paragraph 9(b), all trains operating on high-speed track, immediately adjacent track where the maximum authorized speed exceeds 20 mph, or track providing access to high-speed track shall be equipped to respond to the continuous cab signal/speed control system and ACSES.

3. No conflicting aspects or indications shall be displayed in the locomotive cab.

4. The system must enforce the most restrictive speed at any location associated with either the civil/temporary restriction or cab signal aspect.

5. At interlocking home signals and control points on high-speed tracks or protecting switches providing access to high-speed tracks, the signal and train control system shall enforce a positive stop short of the signal or fouling point when the signal displays an absolute stop. The system shall function such that the train will be brought to a complete stop and cannot be moved again until the first of the following events shall occur: (1) The signal displays a more permissive aspect; or (2) in the event of a system malfunction, or system penalty, the train comes to a complete stop, the engineer receives verbal authority to proceed from the dispatcher, and the engineer activates an override or reset device that is located where it cannot be activated from the engineer's accustomed position in the cab. The train may then only travel at restricted speed until a valid speed command is received by the on-board train equipment. For not to exceed 12 months following cut-in of ACSES, release of the positive stop feature, under conditions where the signal displays an aspect more favorable than stop, but not less favorable than restricting, may be accomplished by use of the reset device; thereafter, this function shall be accomplished automatically so that it is not necessary for the engineer to leave his or her accustomed position in the cab.

6. Failure modes of the system will allow for train movements at reduced speeds, as follows:

a. Failure of cab Signal/ATC System: In the event of failure of the cab signal/ATC system on board a train, the cab signal/ATC system will be cut out; however ACSES will remain operative and enforce a 79 mph speed limit, and the positive stop at home signals displaying an absolute stop. Movement will be made according to the operating rules that apply to cab signal/ATC failures. Release of the positive stop at home signals displaying an aspect more favorable than stop will be provided through a data radio, with information derived from the interlocking circuitry. In territory without fixed automatic block signals, release of the positive stop will not be provided by the data radio unless ''Clear to Next Interlocking'' signal is displayed. Until wayside and on board data radios are in service, ACSES may be cut out following an on board cab signal/ATC failure, to avoid unnecessary positive stop enforcement at home signals displaying an aspect more favorable than absolute stop.

b. *ACSES failure.* If the on-board ACSES fails en route, it must be cut out in a similar manner to the cab signal/ATC system. The engineer will be required to notify the dispatcher that ACSES has been cut out. When given permission to proceed, the train must not exceed 125 mph (NEC-South End) or 110 mph (NEC-North End). All trains with cut out ACSES will operate at conventional train speeds.

c. *Cab signals/ATC & ACSES failure.* In the event of a failure of the cab signal/ATC system onboard a train, the system shall be cut out and the train shall proceed as provided for in 49 CFR 236.567.

d. *Wayside signal system failure.* If the wayside signal system fails, train operation will be at restricted speed to a point where absolute block can be established in advance of the train. Where absolute block is established in advance of the train, the train may proceed at speeds not to exceed 79 mph.

e. *Missing transponder.* If a transponder is not detected where the equipment expected to find the next transponder, the train must not exceed 125 mph (NEC-South End) or 110 mph (NEC-North End) until the next valid transponder is encountered. The 125/110 mph speed restriction will be enforced by the system and ''—'' will be displayed to indicate that the civil speed is unknown. The audible alarm for civil speeds will sound and must be acknowledged. Speed restrictions previously entered into the system, whether temporary or permanent, will be displayed at the proper time and continue to be enforced. If the missing transponder is a positive stop enforcement transponder at the distant signal to an interlocking, the redundancy of the transponder set encountered prior to reaching the location of the transponder set at the distant signal will require a stop when necessary. Since the previous transponder will have transmitted the distance to the stop location, the stop shall be enforced unless a cab signal is received that indicates the interlocking signal is displaying an aspect more favorable than ''Stop,'' ''Stop & Proceed,'' and ''Restricting.'' The 125/110 mph speed restriction will also be enforced regardless of whether the cab signal aspect is being received.

7. When it becomes necessary to cut out the cab signal/ATC system, ACSES, or both, these systems shall be considered inoperative until the engine has been repaired, tested and found to be functioning properly. Repairs shall be made before dispatching the unit on any subsequent trip.

8. Other requirements applicable to the system are as follows:

a. Aspects in the cab shall have only one indication and one name, and will

be shown in such a way as to be understood by the engine crew. These aspects shall be shown by lights and/or illuminated letters or numbers.

b. Entrances to the main line can be protected by electrically locked derails if the speed limit is 15 mph or less. A transponder set shall cut in ACSES prior to movement through the derail and onto the main line. If the speed limit is greater than 15 mph, a positive stop will be required. At entrances from a signaled track, ACSES shall be cut in prior to the distant signal and a positive stop enforced at the home signal.

c. An on-board event recorder shall record, in addition to the required functions of § 229.5(g) [of FRA's Railroad Locomotive Safety Standards (49 CFR Part 229)], the time at which each transponder is encountered, the information associated with that transponder, and each use of the positive stop override. These functions may be incorporated within the on-board computer, or as a stand alone device, but shall continue to record speeds and related cab signal/ATC data, even if ACSES has failed and/or is cut out. The event recorder shall meet all requirements of § 229.135.

9. The following maximum speeds apply on the NEC in territory subject to this order:

a. In ACSES territory where all trains operating on high-speed tracks, adjacent track where the maximum authorized speed exceeds 20 mph, and tracks providing access to high-speed tracks are equipped with cab signal/ATC and ACSES, qualified and ACSES-equipped trainsets otherwise so authorized may operate at maximum speeds not exceeding 150 mph. The maximum speed over any highway-rail crossing shall not exceed 80 mph where only conventional warning systems are in place. Train speeds shall not exceed 95 mph over any highway-rail crossing where arrangements approved by the Associate Administrator for Safety incorporating four-quadrant gates and presence detection are provided and tied into the signal system, such that a train will be brought to a stop should the crossing be determined to be occupied following descent of the gates. Amtrak shall submit for approval of the Associate Administrator for Safety plans for site-specific improvements with timetables for each of the NEC crossings remaining on the NEC-North End.

b. In ACSES territory on the NEC-South End, where access to any high-speed track is prevented by switches locked in the normal position and a parallel route to the high-speed track is provided at crossovers from adjacent tracks, and where no junctions providing direct access exist, qualified and ACSES-equipped trainsets otherwise so authorized may operate to a maximum speed not exceeding 135 mph on such track; and provisions of this order requiring other tracks and trains to be equipped with ACSES do not apply.

10. *Schedule and acceptance requirements.*

a. This order is effective *upon publication.*

b. Not later than 45 days following publication of this order, Amtrak shall deliver to the Associate Administrator for Safety, FRA, a final program and timetable for completion of pre-qualification tests, availability of on-board equipment from Amtrak's vendor, staging of installation of on-board equipment for which Amtrak takes responsibility, and testing of all wayside and on-board equipment prior to cut-in.

c. Contingent upon FRA's acceptance of the final program and timetable, and FRA's acceptance of the results of pre-qualification and pre-service tests, compliance with requirements of this order for use of ACSES on the NEC-North End is required on and after October 21, 2000.

d. Amtrak may commence operations under paragraph 9(b) of this order utilizing equipment qualified under 49 CFR Part 213, as revised, following FRA's approval of the elements of the final program, timetable and test results pertinent to the subject territory and operations.

e. Milepost implementation will occur as scheduled below:

1. Milepost 139.3 (Stonington, Connecticut) to Milepost 181.0 (Cranston, Rhode Island) on October 21, 2000.

2. Milepost 187.0 (Lawn, Rhode Island) to Milepost 218.5 (Transfer, Massachusetts) on November 13, 2000.

3. Milepost 113.3 (Nan, Connecticut) to Milepost 139.0 (High St., Rhode Island) on November 27, 2000.

4. Milepost 181.0, Cranston, Rhode Island to Milepost 187.0 (Lawn, Rhode Island) and Milepost 218.5 (Transfer, Massachusetts) to Milepost 228.0 (Cove, Massachusetts) on December 18, 2000.

5. Milepost 73.6 (Mill River, Connecticut) to Milepost 113.3 (Nan, Connecticut) on January 15, 2001.

Issued in Washington, D.C. on October 13, 2000.

John V. Wells,

Deputy Federal Railroad Administrator.

[FR Doc. 00–26922 Filed 10–18–00; 8:45 am]

BILLING CODE 4910–06–P

DEPARTMENT OF TRANSPORTATION

Federal Railroad Administration

Notice of Application for Approval of Discontinuance or Modification of a Railroad Signal System or Relief from the Requirements of Title 49 Code of Federal Regulations Part 236

Pursuant to Title 49 Code of Federal Regulations (CFR) Part 235 and 49 U.S.C. 20502(a), the following railroads have petitioned the Federal Railroad Administration (FRA) seeking approval for the discontinuance or modification of the signal system or relief from the requirements of 49 CFR Part 236 as detailed below.

[Docket No. FRA–2000–7562]

Applicant: CSX Transportation, Incorporated, Mr. E. G. Peterson, Assistant Chief Engineer, Signal Design and Construction, 4901 Belfort Road, Suite 130 (S/C J–370), Jacksonville, Florida 32256.

CSX Transportation Incorporated seeks approval of the proposed modification of the automatic block signal system, on the main tracks, at 22nd Street, Chicago, Illinois, milepost DC–29, Blue Island Subdivision, Chicago Service Lane, consisting of the discontinuance and removal of automatic signals 44–S and 45–N.

The reason given for the proposed changes is that with the retirement of the Burlington Northern Santa Fe Railway's 26th railroad crossing at grade, removal of the signals will improve operating efficiency.

Any interested party desiring to protest the granting of an application shall set forth specifically the grounds upon which the protest is made, and contain a concise statement of the interest of the Protestant in the proceeding. Additionally, one copy of the protest shall be furnished to the applicant at the address listed above.

All communications concerning this proceeding should be identified by the docket number and must be submitted to the Docket Clerk, DOT Central Docket Management Facility, Room PI–401, Washington, D.C. 20590–0001. Communications received within 45 days of the date of this notice will be considered by the FRA before final action is taken. Comments received after that date will be considered as far as practicable. All written communications concerning these proceedings are available for examination during regular business hours (9:00 a.m.–5:00 p.m.) at DOT Central Docket Management Facility, Room PI–401 (Plaza Level), 400 Seventh Street, S.W., Washington, D.C. 20590–0001. All documents in the

public docket are also available for inspection and copying on the internet at the docket facility's Web site at *http://dms.dot.gov.*

FRA expects to be able to determine these matters without an oral hearing. However, if a specific request for an oral hearing is accompanied by a showing that the party is unable to adequately present his or her position by written statements, an application may be set for public hearing.

Issued in Washington, D.C. on October 12, 2000.

Grady C. Cothen, Jr.,

Deputy Associate Administrator for Safety Standards and Program Development.

[FR Doc. 00–26808 Filed 10–18–00; 8:45 am]

BILLING CODE 4910–06–U

DEPARTMENT OF TRANSPORTATION

Federal Railroad Administration

Notice of Application for Approval of Discontinuance or Modification of a Railroad Signal System or Relief From the Requirements of Title 49 Code of Federal Regulations Part 236

Pursuant to Title 49 Code of Federal Regulations (CFR) Part 235 and 49 U.S.C. 20502(a), the following railroads have petitioned the Federal Railroad Administration (FRA) seeking approval for the discontinuance or modification of the signal system or relief from the requirements of 49 CFR Part 236 as detailed below.

[Docket No. FRA–2000–7561]

Applicant: CSX Transportation, Incorporated, Mr. E.G. Peterson, Assistant Chief Engineer, Signal Design and Construction, 4901 Belfort Road, Suite 130 (S/C J–370), Jacksonville, Florida 32256.

CSX Transportation Incorporated seeks approval of the proposed modification of the traffic control system, on the single main track, at E.E. Harold, Kentucky, milepost CMG 93.6, on the Big Sandy Subdivision, Appalachian Division, consisting the discontinuance and removal of absolute controlled signals 202L and 202R.

The reasons given for the proposed changes are that the power-operated switch and turnout track at W.E. Harold were previously removed, the need for the signals no longer exists under current operating conditions, and removal of the signals will increase operating efficiency.

Any interested party desiring to protest the granting of an application shall set forth specifically the grounds upon which the protest is made, and contain a concise statement of the interest of the Protestant in the proceeding. Additionally, one copy of the protest shall be furnished to the applicant at the address listed above.

All communications concerning this proceeding should be identified by the docket number and must be submitted to the Docket Clerk, DOT Central Docket Management Facility, Room PI–401, Washington, D.C. 20590–0001. Communications received within 45 days of the date of this notice will be considered by the FRA before final action is taken. Comments received after that date will be considered as far as practicable. All written communications concerning these proceedings are available for examination during regular business hours (9:00 a.m.–5:00 p.m.) at DOT Central Docket Management Facility, Room PI–401 (Plaza Level), 400 Seventh Street, S.W., Washington, D.C. 20590–0001. All documents in the public docket are also available for inspection and copying on the internet at the docket facility's Web site at *http://dms.dot.gov.*

FRA expects to be able to determine these matters without an oral hearing. However, if a specific request for an oral hearing is accompanied by a showing that the party is unable to adequately present his or her position by written statements, an application may be set for public hearing.

Issued in Washington, D.C. on October 12, 2000.

Grady C. Cothen, Jr.,

Deputy Associate Administrator for Safety Standards and Program Development.

[FR Doc. 00–26810 Filed 10–18–00; 8:45 am]

BILLING CODE 4910–06–U

DEPARTMENT OF TRANSPORTATION

Federal Railroad Administration

Notice of Application for Approval of Discontinuance or Modification of a Railroad Signal System or Relief From the Requirements of Title 49 Code of Federal Regulations Part 236

Pursuant to Title 49 Code of Federal Regulations (CFR) Part 235 and 49 U.S.C. 20502(a), the following railroads have petitioned the Federal Railroad Administration (FRA) seeking approval for the discontinuance or modification of the signal system or relief from the requirements of 49 CFR Part 236 as detailed below.

[Docket No. FRA–2000–7563]

Applicant: CSX Transportation, Incorporated, Mr. E.G. Peterson, Assistant Chief Engineer, Signal Design and Construction, 4901 Belfort Road, Suite 130 (S/C J–370), Jacksonville, Florida 32256.

CSX Transportation Incorporated seeks approval of the proposed modification of the traffic control system, on the single main track, at Whitehouse, Kentucky, between milepost CMG 50.0 and milepost CMG 52.0, on the Big Sandy Subdivision, Appalachian Division, consisting of the following:

1. The discontinuance and removal of absolute controlled signals 94L and 94R at W.E.Whitehouse, where the power-operated switch had been previously removed;

2. The discontinuance and removal of absolute controlled signals 98L, 98R, and 98RB at E.E. Whitehouse; and

3. Conversion of the power-operated switch at E.E. Whitehouse to hand operation.

The reason given for the proposed changes is to improve operations and increase efficiency.

Any interested party desiring to protest the granting of an application shall set forth specifically the grounds upon which the protest is made, and contain a concise statement of the interest of the Protestant in the proceeding. Additionally, one copy of the protest shall be furnished to the applicant at the address listed above.

All communications concerning this proceeding should be identified by the docket number and must be submitted to the Docket Clerk, DOT Central Docket Management Facility, Room PI–401, Washington, D.C. 20590–0001. Communications received within 45 days of the date of this notice will be considered by the FRA before final action is taken. Comments received after that date will be considered as far as practicable. All written communications concerning these proceedings are available for examination during regular business hours (9:00 a.m.—5:00 p.m.) at DOT Central Docket Management Facility, Room PI–401 (Plaza Level), 400 Seventh Street, S.W., Washington, D.C. 20590–0001. All documents in the public docket are also available for inspection and copying on the internet at the docket facility's Web site at *http://dms.dot.gov.*

FRA expects to be able to determine these matters without an oral hearing. However, if a specific request for an oral hearing is accompanied by a showing that the party is unable to adequately present his or her position by written statements, an application may be set for public hearing.

Issued in Washington, D.C. on October 12, 2000.

Grady C. Cothen, Jr.,

Deputy Associate Administrator for Safety Standards and Program Development.

[FR Doc. 00–26811 Filed 10–18–00; 8:45 am]

BILLING CODE 4910–06–U

DEPARTMENT OF TRANSPORTATION

Federal Railroad Administration

Notice of Application for Approval of Discontinuance or Modification of a Railroad Signal System or Relief From the Requirements of Title 49 Code of Federal Regulations Part 236

Pursuant to Title 49 Code of Federal Regulations (CFR) part 235 and 49 U.S.C. 20502(a), the following railroads have petitioned the Federal Railroad Administration (FRA) seeking approval for the discontinuance or modification of the signal system or relief from the requirements of 49 CFR part 236 as detailed below.

Applicant: CSX Transportation, Incorporated.

[Docket No. FRA–2000–7631]

Mr. E. G. Peterson, Assistant Chief Engineer, Signal Design and Construction, 4901 Belfort Road, Suite 130 (S/C J–370), Jacksonville, Florida 32256

Norfolk Southern Corporation, Mr. E. L. Sweeney, Chief Engineer S&E Engineering, 99 Spring Street, S.W., Atlanta, Georgia 30303

CSX Transportation, Incorporated and Norfolk Southern Corporation jointly seek approval of the proposed modification of the signal system, on all tracks, at Millard Avenue, milepost CTT–26.5, near Toledo, Ohio, on the Toledo Terminal Subdivision, Detroit Service Lane, consisting of the discontinuance and removal of all absolute controlled signals and conversion of all power-operated switches to hand operation. The proposal states that access to the Millard Avenue Yard will be through the Ironville Interlocking, controlled by Norfolk Southern.

The reason given for the proposed changes is that under current operating conditions, the need for these signals no longer exists, and their removal will increase operating efficiency.

Any interested party desiring to protest the granting of an application shall set forth specifically the grounds upon which the protest is made, and contain a concise statement of the interest of the Protestant in the proceeding. Additionally, one copy of the protest shall be furnished to the applicant at the address listed above.

All communications concerning this proceeding should be identified by the docket number and must be submitted to the Docket Clerk, DOT Central Docket Management Facility, Room PI–401, Washington, DC 20590–0001. Communications received within 45 days of the date of this notice will be considered by the FRA before final action is taken. Comments received after that date will be considered as far as practicable. All written communications concerning these proceedings are available for examination during regular business hours (9:00 a.m.–5:00 p.m.) at DOT Central Docket Management Facility, Room PI–401 (Plaza Level), 400 Seventh Street, SW., Washington, DC 20590–0001. All documents in the public docket are also available for inspection and copying on the internet at the docket facility's Web site at *http://dms.dot.gov.*

FRA expects to be able to determine these matters without an oral hearing. However, if a specific request for an oral hearing is accompanied by a showing that the party is unable to adequately present his or her position by written statements, an application may be set for public hearing.

Issued in Washington, D.C. on October 12, 2000.

Grady C. Cothen, Jr.,

Deputy Associate Administrator for Safety Standards and Program Development.

[FR Doc. 00–26815 Filed 10–18–00; 8:45 am]

BILLING CODE 4910–06–P

DEPARTMENT OF TRANSPORTATION

Federal Railroad Administration

Notice of Application for Approval of Discontinuance or Modification of a Railroad Signal System or Relief From the Requirements of Title 49 Code of Federal Regulations Part 236.

Pursuant to Title 49 Code of Federal Regulations (CFR) part 235 and 49 U.S.C. 20502(a), the following railroads have petitioned the Federal Railroad Administration (FRA) seeking approval for the discontinuance or modification of the signal system or relief from the requirements of 49 CFR part 236 as detailed below.

[Docket No. FRA–2000–7643]

Applicant: CSX Transportation, Incorporated, Mr. E.G. Peterson, Assistant Chief Engineer, Signal Design and Construction, 4901 Belfort Road, Suite 130 (S/C J–370), Jacksonville, Florida 32256.

CSX Transportation Incorporated seeks approval of the proposed modification of the signal system, on Main Tracks No. 1 and No. 2, at Sand Patch, Pennsylvania, milepost BF–211.2, on the Keystone Subdivision, Cumberland Division, consisting the discontinuance and removal of signals 9, 13A, 54, 55, 56, and 57, and conversion of the method of operation from interlocking signal system to a traffic control system. The proposal is in conjunction with the retirement of various power-operated switches and their associated signals; relocation of some other signals, and relocation of control for the remaining facilities to the Jacksonville, Florida dispatcher.

The reason given for the proposed changes is that under current operating conditions, the need for the hold out signals no longer exists, and removal of the signals will increase operating efficiency.

Any interested party desiring to protest the granting of an application shall set forth specifically the grounds upon which the protest is made, and contain a concise statement of the interest of the Protestant in the proceeding. Additionally, one copy of the protest shall be furnished to the applicant at the address listed above.

All communications concerning this proceeding should be identified by the docket number and must be submitted to the Docket Clerk, DOT Central Docket Management Facility, Room PI–401, Washington, DC 20590–0001. Communications received within 45 days of the date of this notice will be considered by the FRA before final action is taken. Comments received after that date will be considered as far as practicable. All written communications concerning these proceedings are available for examination during regular business hours (9 a.m.–5 p.m.) at DOT Central Docket Management Facility, Room PI–401 (Plaza Level), 400 Seventh Street, SW., Washington, DC 20590–0001. All documents in the public docket are also available for inspection and copying on the internet at the docket facility's Web site at *http://dms.dot.gov.*

FRA expects to be able to determine these matters without an oral hearing. However, if a specific request for an oral hearing is accompanied by a showing that the party is unable to adequately present his or her position by written statements, an application may be set for public hearing.

Issued in Washington, DC on October 12, 2000.

Grady C. Cothen, Jr.,

Deputy Associate Administrator for Safety Standards and Program Development.

[FR Doc. 00–26816 Filed 10–18–00; 8:45 am]

BILLING CODE 4910–06–P

DEPARTMENT OF TRANSPORTATION

Federal Railroad Administration

Notice of Application for Approval of Discontinuance or Modification of a Railroad Signal System or Relief From the Requirements of Title 49 Code of Federal Regulations Part 236

Pursuant to Title 49 Code of Federal Regulations (CFR) Part 235 and 49 U.S.C. 20502(a), the following railroads have petitioned the Federal Railroad Administration (FRA) seeking approval for the discontinuance or modification of the signal system or relief from the requirements of 49 CFR Part 236 as detailed below.

[Docket No. FRA–2000–7630]

Applicant: I & M Rail Link, LLC, Mr. Scott F. Woodward, Chief Engineer, Post Office Box 8689, Missoula, Montana 59807–8689.

I & M Rail Link, LLC seeks approval of the proposed modification of the traffic control system, on the single main track, at Chula, Missouri, milepost 413.1, on the First Subdivision, consisting of the discontinuance and removal of controlled signals 22LA, 22LB, and 22R, conversion of the associated power-operated switch to hand operation, and installation of new back to back, intermediate signals 4130 and 4131. The proposed changes are scheduled in conjunction with the siding extension project at Laredo, and include the installation of electronic coded track circuits between Laredo and Chula.

The reason given for the proposed changes is that the siding at Chula was converted to a house track by the previous owner and is now used for equipment storage, thereby eliminating the need for a power-operated switch and controlled signals.

Any interested party desiring to protest the granting of an application shall set forth specifically the grounds upon which the protest is made, and contain a concise statement of the interest of the Protestant in the proceeding. Additionally, one copy of the protest shall be furnished to the applicant at the address listed above.

All communications concerning this proceeding should be identified by the docket number and must be submitted to the Docket Clerk, DOT Central Docket Management Facility, Room PI–401, Washington, D.C. 20590–0001. Communications received within 45 days of the date of this notice will be considered by the FRA before final action is taken. Comments received after that date will be considered as far as practicable. All written communications concerning these proceedings are available for examination during regular business hours (9 a.m.–5 p.m.) at DOT Central Docket Management Facility, Room PI–401 (Plaza Level), 400 Seventh Street, S.W., Washington, D.C. 20590–0001. All documents in the public docket are also available for inspection and copying on the internet at the docket facility's Web site at *http://dms.dot.gov.*

FRA expects to be able to determine these matters without an oral hearing. However, if a specific request for an oral hearing is accompanied by a showing that the party is unable to adequately present his or her position by written statements, an application may be set for public hearing.

Issued in Washington, D.C. on October 12, 2000.

Grady C. Cothen, Jr.,

Deputy Associate Administrator, for Safety Standards and Program Development.

[FR Doc. 00–26809 Filed 10–18–00; 8:45 am]

BILLING CODE 4910–06–P

DEPARTMENT OF TRANSPORTATION

Federal Railroad Administration

Notice of Application for Approval of Discontinuance or Modification of a Railroad Signal System or Relief From the Requirements of Title 49 Code of Federal Regulations Part 236

Pursuant to Title 49 Code of Federal Regulations (CFR) Part 235 and 49 U.S.C. 20502(a), the following railroads have petitioned the Federal Railroad Administration (FRA) seeking approval for the discontinuance or modification of the signal system or relief from the requirements of 49 CFR Part 236 as detailed below.

[Docket No. FRA–2000–7931]

Applicant: Indiana Harbor Belt Railroad Company, Mr. C.H. Allen, General Manager 2721—161st Street, Hammond, Indiana 46323–1099.

The Indiana Harbor Belt Railroad Company seeks approval of the proposed modification of the signal system at State Line Interlocking, in Hammond, Indiana. The proposed changes are associated with the elimination of State Line Tower, a 100-year-old mechanical interlocking, and consist of splitting of the existing interlocking into two separate, remote-controlled, state of the art, microprocessor-based, interlockings. The proposal also includes removal of Switch No. 171 from interlocking limits, and its conversion to hand operation.

The reasons given for the proposed changes are the low usage of Switch No. 171, and to increase efficiency of train operations in the area.

Any interested party desiring to protest the granting of an application shall set forth specifically the grounds upon which the protest is made, and contain a concise statement of the interest of the Protestant in the proceeding. Additionally, one copy of the protest shall be furnished to the applicant at the address listed above.

All communications concerning this proceeding should be identified by the docket number and must be submitted to the Docket Clerk, DOT Central Docket Management Facility, Room PI–401, Washington, D.C. 20590–0001. Communications received within 45 days of the date of this notice will be considered by the FRA before final action is taken. Comments received after that date will be considered as far as practicable. All written communications concerning these proceedings are available for examination during regular business hours (9:00 a.m.–5:00 p.m.) at DOT Central Docket Management Facility, Room PI–401 (Plaza Level), 400 Seventh Street, SW., Washington, DC 20590–0001. All documents in the public docket are also available for inspection and copying on the internet at the docket facility's Web site at *http://dms.dot.gov.*

FRA expects to be able to determine these matters without an oral hearing. However, if a specific request for an oral hearing is accompanied by a showing that the party is unable to adequately present his or her position by written statements, an application may be set for public hearing.

Issued in Washington, D.C. on October 12, 2000.

Grady C. Cothen, Jr.,

Deputy Associate Administrator for Safety Standards and Program Development.

[FR Doc. 00–26814 Filed 10–18–00; 8:45 am]

BILLING CODE 4910–06–P

DEPARTMENT OF TRANSPORTATION

Federal Railroad Administration

Notice of Application for Approval of Discontinuance or Modification of a Railroad Signal System or Relief From the Requirements of Title 49 Code of Federal Regulations Part 236

Pursuant to Title 49 Code of Federal Regulations (CFR) Part 235 and 49 U.S.C. 20502(a), the following railroads have petitioned the Federal Railroad Administration (FRA) seeking approval for the discontinuance or modification of the signal system or relief from the requirements of 49 CFR Part 236 as detailed below.

[Docket No. FRA–2000–7930]

Applicants:

Lake Superior and Ishpeming Railroad Company, Mr. John F. Marshall, President and General Manager, 105 East Washington Street, Marquette, Michigan 49855–4385;

Wisconsin Central Limited, and Sault Ste. Marie Bridge Company, Mr. J.R. McCarren, President and Chief Executive Officer, P.O. Box 5062, Rosemont, Illinois 60017–5062.

The Lake Superior and Ishpeming Railroad Company, Wisconsin Central Limited (WC), and Sault Ste. Marie Bridge Company (SSAM) jointly seek approval of the proposed discontinuance and removal of the traffic control system (CTC), on the single main track and siding, between Diamond Jct., WC milepost 162.9 to and including Soo Jct., WC milepost 170.9, and West Wye, WC milepost 164.8 to and including South Wye, SSAM milepost 176.2, near Ishpeming, Michigan. The proposed changes include the following:

1. Retire all CTC control points and associated appurtenances;
2. Install fixed approach signals for Eagle Mills Jct.;
3. Retire power-operated switches, electric locks, and associated signals at South Wye, West Wye, East Wye, Diamond Jct., Negaunee, Landing Jct., and Soo Jct.; and
4. Abandon the track from Diamond Jct. to Marquette, and the connection between South Wye and East Wye.

The reasons given for the proposed changes are the reduction in train traffic, closure of the ore mine, and the abandonment of tracks, no longer warrants the traffic control system.

Any interested party desiring to protest the granting of an application shall set forth specifically the grounds upon which the protest is made, and contain a concise statement of the interest of the Protestant in the proceeding. Additionally, one copy of the protest shall be furnished to the applicant at the address listed above.

All communications concerning this proceeding should be identified by the docket number and must be submitted to the Docket Clerk, DOT Central Docket Management Facility, Room PI–401, Washington, D.C. 20590–0001. Communications received within 45 days of the date of this notice will be considered by the FRA before final action is taken. Comments received after that date will be considered as far as practicable. All written communications concerning these proceedings are available for examination during regular business hours (9:00 a.m.–5:00 p.m.) at DOT Central Docket Management Facility, Room PI–401 (Plaza Level), 400 Seventh Street, S.W., Washington, D.C. 20590–0001. All documents in the public docket are also available for inspection and copying on the internet at the docket facility's Web site at *http://dms.dot.gov.*

FRA expects to be able to determine these matters without an oral hearing. However, if a specific request for an oral hearing is accompanied by a showing that the party is unable to adequately present his or her position by written statements, an application may be set for public hearing.

Issued in Washington, D.C. on October 12, 2000.

Grady C. Cothen, Jr.,

Deputy Associate Administrator for Safety Standards and Program Development.

[FR Doc. 00–26813 Filed 10–18–00; 8:45 am]

BILLING CODE 4910–06–P

DEPARTMENT OF TRANSPORTATION

Federal Railroad Administration

Notice of Application for Approval of Discontinuance or Modification of a Railroad Signal System or Relief From the Requirements of Title 49 Code of Federal Regulations Part 236

Pursuant to Title 49 Code of Federal Regulations (CFR) Part 235 and 49 U.S.C. 20502(a), the following railroads have petitioned the Federal Railroad Administration (FRA) seeking approval for the discontinuance or modification of the signal system or relief from the requirements of 49 CFR Part 236 as detailed below.

[Docket No. FRA–2000–7781]

Applicant: Union Pacific Railroad Company, Mr. Phil Abaray, Chief Engineer—Signals, 1416 Dodge Street, Room 1000, Omaha, Nebraska 68179–1000.

Union Pacific Railroad Company seeks approval of the proposed discontinuance and removal of the automatic block signal system, on the main tracks, between Hudson Bridge, Wisconsin, milepost 18.6, on the Altoona Subdivision and Necedah, Wisconsin, milepost 189.1, on the Wynville Subdivision, a distance of approximately 170.5 miles.

The reason given for the proposed changes is that traffic in the area has decreased due to changes in shipping and upgrading of alternate routes, and no longer justifies maintenance of an automatic block signal system in the region.

Any interested party desiring to protest the granting of an application shall set forth specifically the grounds upon which the protest is made, and contain a concise statement of the interest of the Protestant in the proceeding. Additionally, one copy of the protest shall be furnished to the applicant at the address listed above.

All communications concerning this proceeding should be identified by the docket number and must be submitted to the Docket Clerk, DOT Central Docket Management Facility, Room PI–401, Washington, D.C. 20590–0001. Communications received within 45 days of the date of this notice will be considered by the FRA before final action is taken. Comments received after that date will be considered as far as practicable. All written communications concerning these proceedings are available for examination during regular business hours (9:00 a.m.–5:00 p.m.) at DOT Central Docket Management Facility, Room PI–401 (Plaza Level), 400 Seventh Street, S.W., Washington, D.C. 20590–0001. All documents in the public docket are also available for inspection and copying on the internet at the docket facility's Web site at *http://dms.dot.gov.*

FRA expects to be able to determine these matters without an oral hearing. However, if a specific request for an oral hearing is accompanied by a showing that the party is unable to adequately present his or her position by written statements, an application may be set for public hearing.

Issued in Washington, D.C. on October 12, 2000.

Grady C. Cothen, Jr.,

Deputy Associate Administrator for Safety Standards and Program Development.

[FR Doc. 00–26807 Filed 10–18–00; 8:45 am]

BILLING CODE 4910–06–P

DEPARTMENT OF TRANSPORTATION

Federal Railroad Administration

Notice of Application for Approval of Discontinuance or Modification of a Railroad Signal System or Relief From the Requirements of Title 49 Code of Federal Regulations Part 236

Pursuant to Title 49 Code of Federal Regulations (CFR) Part 235 and 49 U.S.C. 20502(a), the following railroads have petitioned the Federal Railroad Administration (FRA) seeking approval for the discontinuance or modification of the signal system or relief from the requirements of 49 CFR Part 236 as detailed below.

[Docket No. FRA–2000–7700]

Applicant: Union Pacific Railroad Company, Mr. Lee A. Roach, Director—Operating Practices, 1416 Dodge Street, Room 625, Omaha, Nebraska 68179.

The Union Pacific Railroad Company (UP) seeks relief from the requirements of the Rules, Standard and Instructions, Title 49 CFR, Part 236, §§ 236.566, 236.567, and 236.587, in all UP automatic cab signal (ACS) territory west of Council Bluffs, Iowa and Kansas City, Missouri, to the extent as follows:

Section 236.566—That UP be permitted to operate non-equipped foreign or detour train movements, in ACS territory, by wayside signal indications, at maximum authorized timetable speeds, without establishing an absolute block.

Section 236.567—That UP be permitted to operate failure en route, ACS locomotives, by wayside signal indications, at maximum authorized timetable speeds, without establishing an absolute block.

Section 236.587—That UP be permitted to operate a previously tested ACS equipped locomotive, without another departure test, when the locomotive changes direction more than 24 hours after its initial terminal departure test.

Applicant's justification for relief: To place UP on equal footing with competitors that do not have ACS and are allowed to operate solely as governed by regulations applicable to their wayside signal systems. The application of the referenced regulations serves to impede UP operations and effectively place UP at a competitive disadvantage compared to competitors that do not have ACS.

Any interested party desiring to protest the granting of an application shall set forth specifically the grounds upon which the protest is made, and contain a concise statement of the interest of the Protestant in the proceeding. Additionally, one copy of the protest shall be furnished to the applicant at the address listed above.

All communications concerning this proceeding should be identified by the docket number and must be submitted to the Docket Clerk, DOT Central Docket Management Facility, Room PI–401, Washington, D.C. 20590–0001. Communications received within 45 days of the date of this notice will be considered by the FRA before final action is taken. Comments received after that date will be considered as far as practicable. All written communications concerning these proceedings are available for examination during regular business hours (9:00 a.m.–5:00 p.m.) at DOT Central Docket Management Facility, Room PI–401 (Plaza Level), 400 Seventh Street, S.W., Washington, D.C. 20590–0001. All documents in the public docket are also available for inspection and copying on the internet at the docket facility's Web site at *http://dms.dot.gov.*

FRA expects to be able to determine these matters without an oral hearing. However, if a specific request for an oral hearing is accompanied by a showing that the party is unable to adequately present his or her position by written statements, an application may be set for public hearing.

Issued in Washington, D.C. on October 12, 2000.

Grady C. Cothen, Jr.,

Deputy Associate Administrator for Safety Standards and Program Development.

[FR Doc. 00–26812 Filed 10–18–00; 8:45 am]

BILLING CODE 4910–06–U

DEPARTMENT OF TRANSPORTATION

Federal Transit Administration

Announcement of Selected Fiscal Year 2000 Projects for the Job Access and Reverse Commute Competitive Grant Program

AGENCY: Federal Transit Administration, DOT.

ACTION: Notice.

SUMMARY: The U.S. Department of Transportation's (DOT) Federal Transit Administration (FTA) solicited competitive grants under the Job Access and Reverse Commute grant program, authorized under Section 3037 of the Transportation Equity Act for the 21st Century (TEA–21). The solicitation was announced in the **Federal Register** of Friday, March 10, 2000, Vol. 65, No. 48, pp. 13210–13220. This notice announces the successful applicants for fiscal year (FY) 2000.

FOR FURTHER INFORMATION: Contact the appropriate FTA Regional Administrator for application-specific information and issues (Appendix A). For general program information, contact Doug Birnie, Office of Research Management, (202) 366–1666, email *douglas.birnie@fta.dot.gov*, or refer to the Job Access and Reverse Commute Competitive Grants Notice, 65 Fed. Reg. 13210 *et seq.*, March 10, 2000. A TDD is available at 1–800–877–8339 (TDD/FIRS). The notice can also be accessed through FTA's web site, [*www.fta.dot.gov/wtw*].

SUPPLEMENTARY INFORMATION: The Job Access and Reverse Commute grant program is intended to establish an area-wide regional approach to job access challenges through the establishment of an Area-Wide Job Access and Reverse Commute Transportation Plan. Projects derived from this plan support the implementation of a variety of transportation services that may be needed to connect welfare recipients to jobs and related employment activities. All projects funded under the Job Access and Reverse Commute grant program must be derived from this area-wide plan. The Job Access and Reverse Commute Program has two major goals: to provide transportation services in urban, suburban and rural areas to assist welfare recipients and low income individuals in gaining access to employment opportunities; and to increase collaboration among transportation providers, human service agencies, employers, metropolitan planning organizations (MPOs), states, and affected communities and individuals.

The following table lists the successful competitive applicants for fiscal year 2000, by state:

State	Locality	Applicant (sub-applicant)	FTA funds
Arkansas	Fort Smith	City of Fort Smith	$346,930
Arkansas	Little Rock	Central Arkansas Transit	500,000
California	Marysville	Yuba-Sutter Transit Authority	98,500

State	Locality	Applicant (sub-applicant)	FTA funds
California	Merced	Merced County Transit	76,525
California	Monterey	Monterey-Salinas Transit	367,683
California	Oakland	AC Transit	294,900
California	Sacramento	CALTRANS	1,000,000
California	Sacramento	Sacramento Regional Transit District	800,000
California	San Diego	San Diego Association of Governments	200,000
California	San Francisco	San Francisco Airport Authority	262,037
California	San Jose	OUTREACH	500,000
California	San Luis Obispo	San Luis Obispo Council of Governments	192,041
California	Stockton	San Joaquin Council of Governments (Coordinator)	62,500
California	Stockton	San Joaquin Council of Governments (Ride Match)	62,500
California	Stockton	San Joaquin Regiona Transit District	75,000
Colorado	Denver	Regional Transportation District	700,000
Colorado	Loveland	City of Loveland	102,223
Colorado	Pagosa Springs	Archuleta County Social Services	132,072
Connecticut	Bridgeport	Connecticut Department of Transportation (Southwest Region)	200,000
Connecticut	Waterbury, Danbury, Torrington	Connecticut Department of Transportation (Northwest Region)	363,604
Delaware	Kent County (Dover)	Delaware Department of Transportation	172,500
Florida	Fort Lauderdale	Broward County Division of Mass Transit	500,000
Illinois	Bloomington	YMCA—McLean County	37,500
Illinois	St. Louis/ East St. Louis	St. Clair County (East St. Louis Community College Center, Metropolitan Education & Training Center, Airport Employment & Education Center, Bi-State Development Agency).	87,000
Indiana	Muncie	Muncie Public Transportation Corporation	100,182
Louisiana	Baton Rouge	Capital Transportation Corporation	500,000
Louisiana	Jefferson Parish	City of Jefferson Parish	250,000
Maine	Portland	Maine Department of Transportation (Greater Portland Council of Governments).	200,000
Massachusetts	Boston	Executive Office of Transportation and Construction	140,085
Massachusetts	Boston	Massachusetts Bay Transportation Authority	455,000
Massachusetts	Brockton	Executive Office of Transportation and Construction (Brockton Area Transit Authority).	184,091
Massachusetts	Cape Cod	Executive Office of Transportation and Construction (Cape Cod Transit Authority).	166,195
Massachusetts	Fall River, New Bedford, Dartmouth.	Executive Office of Transportation and Construction (Southeastern Regional Transit Authority).	184,091
Massachusetts	Gloucester & Cape Ann	Executive Office of Transportation and Construction (Cape Ann Transit Authority).	213,974
Massachusetts	Lowell	Executive Office of Transportation and Construction (Lowell Regional Transit Authority).	184,091
Massachusetts	Pittsfield, North Adams, Lee	Executive Office of Transportation and Construction (Berkshire Regional Transit Authority).	144,235
Massachusetts	Plymouth, Taunton, Wareham	Executive Office of Transportation and Construction (Greater Attleboro-Taunton Transit Authority).	184,091
Massachusetts	Springfield	Pioneer Valley Regional Transit Authority (Hampden County Employment & Training Consortium).	500,000
Massachusetts	Worcester	Worcester Regional Transit Authority	366,625
Michigan	Alger County	Michigan Department of Transportation (Alger County)	32,335
Michigan	Allegan County	Michigan Department of Transportation (Allegan County)	150,000
Michigan	Detroit	Southeastern Michigan Council of Governments (City of Detroit Department of Transportation).	1,165,727
Minnesota	St. Cloud	St. Cloud Metro	62,050
Missouri	Madison, St. Genevieve, St. Francois, Perry Iron, Bollinger, Cape Giradeau, Washington Counties.	Missouri Department of Transportation (Southeast Missouri Private Industry Council).	200,000
Missouri	Springfield	City Utilities of Springfield	152,500
Missouri	St. Louis	Missouri Department of Economic Development (Bi-State Development Agency).	55,000
Missouri	St. Louis	St. Charles County (City of St. Louis Agency on Training & Employment, St. Louis County Department of Human Services, Jefferson & Franklin County Office of Job Training Programs).	397,542
New Hampshire	Nashua	City of Nashua (Town of Milford)	184,000
New Hampshire	Portsmouth-Dover-Rochester	Cooperative Alliance for Seacoast Transportation	135,000
New Mexico	Las Cruces	City of Las Cruces	260,000
New Mexico	Santa Fe	City of Santa Fe	315,000
New Mexico	Santa Fe	New Mexico State Highway and Transportation Department	601,190
New York	Binghamton	Broome County	200,000
New York	Ithaca/Tompkins County	Ithaca/Tompkins County	200,000
New York	Utica/Rome	Herkimer-Oneida Counties	200,000
North Carolina	Raleigh (Wilmington)	North Carolina Department of Transportation (New Hanover County)	142,000
North Carolina	Raleigh (Winston-Salem)	North Carolina Department of Transportation (Winston-Salem Transit Authority).	311,580
Ohio	Akron	Metro Regional Transit Authority	476,622
Ohio	Cincinnati	Ohio-Kentucky-Indiana Regional Council of Governments	484,570

State	Locality	Applicant (sub-applicant)	FTA funds
Ohio	Cleveland	Greater Cleveland Regional Transit Authority	500,000
Ohio	Columbus	Central Ohio Transit Authority	500,000
Ohio	Dayton	Miami Valley Regional Transit Authority	285,000
Ohio	Lorain	Lorain County Transit	63,500
Ohio	Toledo	Toledo Metropolitan Area Council of Governments	500,000
Ohio	Youngstown	Western Reserve Transit Authority	700,000
Oregon	Medford	Oregon Department of Transportation (Rogue Valley Transportation District).	151,767
Oregon	Portland	Tri-County Metropolitan Transportation District of Oregon	850,000
Oregon	Salem	Oregon Department of Transportation (Salem Area Mass Transit District).	99,062
Pennsylvania	Erie	Greater Erie Community Action Committee	200,000
Pennsylvania	Indiana	Indiana County Transit Authority	51,580
Pennsylvania	Lancaster	Red Rose Transit Authority	121,000
Pennsylvania	Philadelphia Metro Area	Southeastern Pennsylvania Transportation Authority	450,683
Rhode Island	Providence	Rhode Island Public Transit Authority	500,000
Tennessee	Chattanooga	Chattanooga Area Regional Transportation Authority	500,000
Tennessee	Nashville	Regional Transportation Authority	410,883
Tennessee	Nashville (Statewide-Rural)	Tennessee Department of Transportation	174,608
Texas	Abilene	City of Abilene	125,000
Texas	Brownsville	City of Brownsville—Brownsville Urban Transit	200,000
Texas	Galveston	Gulf Coast Center and Island Transit	728,662
Texas	Lubbock	City Transit Management Company	200,000
Texas	San Antonio	Alamo Area Council of Governments	150,000
Virginia	Charlottesville	Virginia Department of Rail and Public Transportation (JAUNT, Inc.)	367,100
Virginia	Roanoke	Virginia Department of Rail and Public Transportation (Unified Human Services Transportation Services, Inc.).	200,000
Washington	Bellingham	Washington State Department of Transportation (Northwest Regional Council—RIDES).	249,917
Washington	Centralia	Washington State Department of Transportation (Lewis Public Transportation Benefit Area).	70,000
Washington	Olympia	Washington State Department of Transportation (Intercity Transit)	89,750
Washington	Olympia	Washington State Department of Transportation (Intercity Transit, Olympia ''Local Travel Agency'').	42,300
Washington	Olympia	Washington State Department of Transportation (Thurston Regional Planning Council).	120,500
Washington	Richland	Washington State Department of Transportation (Ben Franklin Transit)	159,000
Washington	Seattle	Puget Sound Regional Council	200,000
Washington	Yakima	Washington State Department of Transportation (People for People, Yakima-Kittitas).	98,177

Pre-Award Authority: has provided pre-award spending authority for this program which permits successful applicants to incur costs on eligible projects without prejudice to possible Federal participation in the cost of the project or projects. However, prior to exercising pre-award authority, successful applicants must comply with all Federal requirements. Failure to do so will render a project ineligible for FTA financial assistance. Successful applicants are strongly encouraged to consult the appropriate regional office regarding the eligibility of the project for future FTA funds or the applicability of the conditions and Federal requirements. Pre-award spending authority was provided to continue projects previously funded in FY 1999, effective May 7, 2000. All other new projects selected and announced by this notice are likewise granted pre-award spending authority upon issuance of this notice.

Certifications and Assurances Requirements: In accordance with 49 U.S.C. 5323(n), certifications and assurances have been compiled for the various FTA programs. Before FTA may award a Federal grant, each successful applicant must provide to FTA all certifications and assurances required by Federal laws and regulations applicable to itself and its project. A state providing certifications and assurances on behalf of its prospective subrecipients should obtain sufficient documentation from those subrecipients needed to provide informed certifications and assurances. A successful applicant for funds under the Job Access and Reverse Commute Grant Program will be required to comply with the requirements of the FTA's Annual Certifications and Assurances. It is important that each successful applicant be familiar with all certifications and assurances as they are a prerequisite for receiving FTA financial assistance. All successful applicants are advised to read the entire text of those Certifications and Assurances to be confident of their responsibilities and commitments.

The signature page accompanying the Certifications and Assurances contains the current fiscal year's certifications and, when properly attested to and submitted to FTA, assures FTA that the applicant intends to comply with the requirements for the specific program involved. FTA will not award any Federal assistance until the successful applicant provides assurance of compliance by selecting Category I on the signature page and all other categories applicable to itself and its project.

FTA's fiscal year 2001 Certifications and Assurances will be published in the **Federal Register**. They will also be available on the the World Wide Web at [ ]. Copies may also be obtained from FTA regional offices. Applicants that need further assistance should contact the appropriate FTA regional office (see Appendix A) for further information.

U.S. Department of Labor Certification: As a condition of release of Federal funds for this program, Federal Transit law requires that applicants must comply with 49 U.S.C.

section 5333(b), administered under the Department of Labor's (DOL) Mass Transit Employee Protection Program. These employee protections include the preservation of rights, privileges, and benefits under existing collective bargaining agreements, the continuation of collective bargaining rights, the protection of individual employees against a worsening of their positions related to employment, assurances of employment to employees of acquired mass transportation systems, priority of reemployment, and paid training or retraining. Generally, DOL processes the employee protection certification required under Section 5333(b) in accordance with the procedural guidelines published at 29 C.F.R. 215.3. However, for the Job Access and Reverse Commute Program, DOL has proposed to apply appropriate protections without referral for Job Access and Reverse Commute grant applications serving populations under 200,000 and to utilize the guidelines for Job Access and Reverse Commute grant applications serving populations of 200,000 or more. FTA will submit the grant application to DOL for certification.

Grant funds will NOT be released without DOL certification. Where there are questions regarding the DOL certification process and/or information needed by DOL to obtain a labor certification, successful applicants must contact the appropriate FTA regional office (See Appendix A). Additionally, guidance is provided on the World Wide Web at [*http://www.fta.dot.gov.wtw/labor.htm*].

Completed Application: All successful applicants must now proceed to complete their grant application by fully documenting all the Job Access and Reverse Commute program requirements that were not fully documented when the application was submitted. FTA regional offices will advise applicants by letter of any remaining outstanding items, as well as stipulations specific to the Job Access and Reverse Commute project which need to be addressed and/or fully documented prior to grant approval.

Successful applicants will be notified in writing by the FTA regional offices with further guidance.

Issued on: October 13, 2000.

Nuria I. Fernandez,

Acting Administrator.

Appendix A–FTA Regional Offices

Region I—

Maine, New Hampshire, Vermont, Connecticut, Rhode Island, and Massachusetts. Richard Doyle, FTA Regional Administrator, Volpe National Transportation Systems Center, Kendall Square, 55 Broadway, Suite 920, Cambridge, MA 02142–1093, (617) 494–2055

Region II—

New York, New Jersey, and Virgin Islands. Letitia Thompson, FTA Regional Administrator, One Bowling Green, Room 429, New York, NY 10004–1415, (212) 668–2170

Region III—

Pennsylvania, Delaware, Maryland, Virginia, West Virginia, and District of Columbia, Susan Schruth, FTA Regional Administrator, 1760 Market Street, Suite 500, Philadelphia, PA 19103–4124, (215) 656–7100

Region IV—

Kentucky, North Carolina, South Carolina, Georgia, Florida, Alabama, Mississippi, Tennessee, and Puerto Rico. Jerry Franklin, FTA Regional Administrator, 61 Forsyth Street, S.W., Suite 17T50, Atlanta, GA 30303, (404) 562–3500

Region V—

Minnesota, Wisconsin, Michigan, Illinois, Indiana, and Ohio. Joel Ettinger, FTA Regional Administrator, 200 West Adams Street, Suite 2410, Chicago, IL 60606–5232, (312) 353–2789

Region VI—

Arkansas, Louisiana, Oklahoma, Texas, and New Mexico, Robert Patrick, FTA Regional Administrator, 819 Taylor Street, Room 8A36, Ft. Worth, TX 76102, (817) 978–0550

Region VII—

Missouri, Iowa, Kansas, and Nebraska. Mokhtee Ahmad, FTA Regional Administrator, 901 Locust Street, Suite 404, Kansas City, MO 64106, (816) 329–3920

Region VIII—

Colorado, Utah, Wyoming, Montana, North Dakota, South Dakota. Lee Waddleton, FTA Regional Administrator, Columbine Place, 216 16th Street, Suite 650, Denver, CO 80202–5120, (303) 844–3242

Region IX—

California, Hawaii, Guam, Arizona, Nevada, American Samoa, and the Northern Mariana Islands. Leslie Rogers, FTA Regional Administrator, 201 Mission Street, Suite 2210, San Francisco, CA 94105–1839, (415) 744–3133

Region X—

Idaho, Oregon, Washington, and Alaska. Helen Knoll, FTA Regional Administrator, Jackson Federal Building, 915 Second Avenue, Suite 3142, Seattle, WA 98174–1002, (206) 220–7954

[FR Doc. 00–26818 Filed 10–18–00; 8:45 am]

BILLING CODE 4910–57–P

DEPARTMENT OF TRANSPORTATION

Maritime Administration

[Docket No. MARAD–2000–7798]

Criteria for Granting Waivers of Requirement for Exclusive U.S.-Flag Vessel Carriage of Certain Export Cargoes

AGENCY: Maritime Administration, Department of Transportation.

ACTION: Extension of comment period.

SUMMARY: The Maritime Administration (MARAD) is hereby giving notice that the closing date for comments in Docket No. MARAD–2000–7798, proposed policy revision relating to the criteria for granting waivers of requirement for exclusive U.S.-flag vessel carriage of certain export cargoes, has been extended to close of business (5:00 p.m. est) November 13, 2000. The notice of application in Docket No. MARAD–2000–7798 was published in the **Federal Register** of August 21, 2000 (65 FR 50732–50740).

Dated: October 16, 2000.

By Order of the Maritime Administrator.

Joel C. Richard,

Secretary, Maritime Administration.

[FR Doc. 00–26890 Filed 10–18–00; 8:45 am]

BILLING CODE 4910–81–P

DEPARTMENT OF TRANSPORTATION

Surface Transportation Board

[STB Finance Docket No. 29653 (Sub-No. 8)]

Ferrocarril Mexicano, S.A. de C.V.—Pooling of Car Service Regarding Multilevel Cars

AGENCY: Surface Transportation Board.

ACTION: Notice of filing of application.

SUMMARY: Ferrocarril Mexicano, S.A. de C.V. (Ferromex), has filed an application seeking approval for its participation in an existing railroad agreement for the pooling of services related to multilevel cars used to transport motor vehicles and boxcars used to transport automobile parts. Ferromex is a common carrier engaged in the transportation of property by railroad in Mexico. Its participation in the pooling agreement will be limited to international traffic moving between points in Mexico, the United States, and Canada.

DATES: Any comments on the application must be filed by November 20, 2000.

ADDRESSES: Send an original plus 10 copies of any comments, referring to

STB Finance Docket No. 29653 (Sub-No. 8), to the Surface Transportation Board, Office of the Secretary, Case Control Unit, 1925 K Street, N.W., Washington, DC 20423–0001. In addition, send one copy of any comments to: (1) the U.S. Department of Justice, Antitrust Division, 10th Street & Pennsylvania Avenue, N.W., Washington, DC 20530; and (2) Juan Manuel Correa Cuellar, Bosque de Ciruelos No. 99, Col. Bosques de las Lomas, Mexico City, MX 11700.

FOR FURTHER INFORMATION CONTACT: Beryl Gordon, (202) 565–1600. [TDD for the hearing impaired: 1–800–877–8339.]

SUPPLEMENTARY INFORMATION: Under 49 U.S.C. 11322, the Board may approve pooling agreements that are voluntarily entered into by carriers, provided that the pooling or division of traffic, services, or earnings will be in the interest of better service to the public or of economy of operation and will not unreasonably restrain competition. The pooling agreement that Ferromex seeks to join was originally approved by the Board's predecessor, the Interstate Commerce Commission (ICC), in *The Baltimore and Ohio Railroad Company, et al.—Pooling of Car Service Regarding Multi-Level Cars*, Finance Docket No. 29653 (ICC served Aug. 29, 1981). That agreement applied only to multilevel cars. Subsequently, the ICC approved amendments to the agreement authorizing the pooling of railroad services in auto-parts boxcars in *The Baltimore and Ohio Railroad Company, et al.—Pooling of Car Service Regarding Multi-Level Cars*, Finance Docket No. 29653 (Sub-No. 3) (ICC served Apr. 18, 1986). The agreement was amended in *The Baltimore and Ohio Railroad Company, et al.—Pooling of Car Service Regarding Multilevel Cars*, Finance Docket No. 29653 (Sub-No. 6) (ICC served June 30, 1995), to enable railroads and shippers to obtain and use information that they otherwise would not have, thereby allowing pool members to increase the efficiency of distribution of the multilevel car fleet and minimize unnecessary investment. Other modifications included adding additional carriers to the pool, such as Canadian Pacific Limited in *The Baltimore and Ohio Railroad Company, et al.—Pooling of Car Service Regarding Multi-Level Cars*, Finance Docket No. 29653 (Sub-No. 1) (ICC served Apr. 12, 1983), Canadian National Railway Company in *The Baltimore and Ohio Railroad Company, et al.—Pooling of Car Service Regarding Multi-Level Cars*, Finance Docket No. 29653 (Sub-No. 2) (ICC served May 12, 1983), and *Transportacion Ferroviaria Mexicana in Transportacion Ferroviaria Mexicana—Pooling of Car Service Regarding Multilevel Cars*, Finance Docket No. 29653 (Sub-No. 7) (STB served Sept 28, 1999).

Decided: October 12, 2000.

By the Board, David M. Konschnik, Director, Office of Proceedings.

Vernon A. Williams,

Secretary.

[FR Doc. 00–26916 Filed 10–18–00; 8:45 am]

BILLING CODE 4915–00–P

DEPARTMENT OF THE TREASURY

Submission for OMB Review; Comment Request

October 6, 2000.

The Department of the Treasury has submitted the following public information collection requirement(s) to OMB for review and clearance under the Paperwork Reduction Act of 1995, Public Law 104–13. Copies of the submission(s) may be obtained by calling the Treasury Bureau Clearance Officer listed. Comments regarding this information collection should be addressed to the OMB reviewer listed and to the Treasury Department Clearance Officer, Department of the Treasury, Room 2110, 1425 New York Avenue, NW., Washington, DC 20220.

DATES: Written comments should be received on or before November 20, 2000 to be assured of consideration.

Departmental Offices/Community Development Financial Institutional (CDFI) Fund

OMB Number: New collection.

Form Number: CDFI 0016.

Type of Review: New collection.

Title: Conflict of Interest Package for Community Development Financial Institutional (CDFI) Fund Non-Federal Readers.

Description: The CDFI Fund seeks to collect information from potential contractors to identify, evaluate, and avoid significant potential conflicts of interest early in the acquisition process. Respondents selected as contractors will evaluate applications for Federal financial assistance under the Community Development Financial Institutions Program. Respondents are predominantly individuals who are experts in the field of community development.

Respondents: Individuals or households, Business or other for-profit, Not-for-profit institutions.

Estimated Number of Respondents: 80.

Estimated Burden Hours Per Respondent: 45 minutes.

Frequency of Response: On occasion.

Estimated Total Reporting Burden: 60 hours.

Clearance Officer: Lois K. Holland (202) 622–1563, Departmental Offices, Room 2110, 1425 New York Avenue, N.W., Washington, DC 20220.

OMB Reviewer: Alexander T. Hunt (202) 395–7860, Office of Management and Budget, Room 10202, New Executive Office Building, Washington, DC 20503.

Lois K. Holland,

Departmental Reports, Management Officer.

[FR Doc. 00–26795 Filed 10–18–00; 8:45 am]

BILLING CODE 4810–25–P

DEPARTMENT OF THE TREASURY

Submission for OMB Review; Comment Request

October 10, 2000.

The Department of Treasury has submitted the following public information collection requirement(s) to OMB for review and clearance under the Paperwork Reduction Act of 1995, Public Law 104–13. Copies of the submission(s) may be obtained by calling the Treasury Bureau Clearance Officer listed. Comments regarding this information collection should be addressed to the OMB reviewer listed and to the Treasury Department Clearance Officer, Department of the Treasury, Room 2110, 1425 New York Avenue, NW., Washington, DC 20220.

DATES: Written comments should be received on or before November 20, 2000 to be assured of consideration.

Departmental Offices/International Portfolio Investment Data Reporting System

OMB Number: 1505–0001.

Form Number: International Capital Form S.

Type of Review: Revision.

Title: Purchases and Sales of Long-Term Securities by Foreigners.

Description: Form S is required by law and is designed to collect timely information on international portfolio capital movements, including foreigners' purchases and sales of long-term securities in transactions with U.S. persons. This information is necessary for compiling the U.S. balance of payments, for calculating the U.S. international investment position, and for formulating U.S. international financial and monetary policies.

Respondents: Business or other for-profit.

Estimated Number of Respondents: 240.

Estimated Burden Hours Per Respondent: 5 hours.

Frequency of Response: Monthly.

Estimated Total Reporting Burden: 16,200 hours.

OMB Number: 1505–0016.

Form Number: International Capital Form BQ–1, Parts 1 and 2.

Type of Review: Revision.

Title: Reporting Bank's Own Claims and Selected Claims of Broker or Dealer on Foreigners (Form BQ–1, Part 1); and Domestic Customers Claims on Foreigners Held by Reporting Bank, Broker or Dealer, Denominated in Dollars (Form BQ–1, Part 2).

Description: Form BQ–1 is required by law and is designed to collect timely information on international portfolio capital movements, including U.S. dollar claims of banks, other depository institutions, brokers and dealers, and of their domestic customers vis-a-vis foreigners. This information is necessary for compiling U.S. international financial and monetary policies.

Respondents: Business or other for-profit.

Estimated Number of Respondents: 320.

Estimated Burden Hours Per Respondent: 4 hours.

Frequency of Response: Quarterly.

Estimated Total Reporting Burden: 5,600 hours.

OMB Number: 1505–0017.

Form Number: International Capital Form BC/BC(SA).

Type of Review: Revision.

Title: Reporting Bank's Own Claims, and Selected Claims of Broker or Dealer, on Foreigners, Denominated in Dollars.

Description: Form BC/BC(SA) is required by law and is designed to collect timely information on international portfolio capital movements, including U.S. dollar claims of banks, other depository institutions, brokers and dealers, and of their domestic customers vis-a-vis foreigners. This information is necessary for compiling U.S. international financial and monetary policies.

Respondents: Business or other for-profit.

Estimated Number of Respondents: 355.

Estimated Burden Hours Per Respondent: 8 hours.

Frequency of Response: Monthly, Semi-annually.

Estimated Total Reporting Burden: 39,200 hours.

OMB Number: 1505–0018.

Form Number: International Capital Form BL–2/BL–2(SA).

Type of Review: Revision.

Title: Custody Liabilities of Reporting Banks, Brokers and Dealers to Foreigners, Denominated in Dollars.

Description: Form BL–2/BL–2(SA) is required by law and is designed to collect timely information on international portfolio capital movements, including U.S. dollar custody liabilities of banks, other depository institutions, brokers and dealers, and of their domestic customers vis-a-vis foreigners. This information is necessary for compiling U.S. balance of payments, for calculating U.S. international investment position, and for formulating U.S. international financial and monetary policies.

Respondents: Business or other for-profit.

Estimated Number of Respondents: 110.

Estimated Burden Hours Per Respondent: 5 hours, 30 minutes.

Frequency of Response: Monthly, Semi-annually.

Estimated Total Reporting Burden: 9,900 hours.

OMB Number: 1505–0019.

Form Number: International Capital Form BL–1/BL–1(SA).

Type of Review: Revision.

Title: Reporting Bank's Own Liabilities, and Selected Liabilities of Broker or Dealer, to Foreigners, Denominated in Dollars.

Description: Form BL–1/BL–1(SA) is required by law and is designed to collect timely information on international portfolio capital movements, including U.S. dollar liabilities of banks, other depository institutions, brokers and dealers, and of their domestic customers vis-a-vis foreigners. This information is necessary for compiling U.S. balance of payments, for calculating U.S. international investment position, and for formulating U.S. international financial and monetary policies.

Respondents: Business or other for-profit.

Estimated Number of Respondents: 415.

Estimated Burden Hours Per Respondent: 8 hours.

Frequency of Response: Monthly, Semi-annually.

Estimated Total Reporting Burden: 46,000 hours.

OMB Number: 1505–0020.

Form Number: International Capital Form BQ–2, Parts 1 and 2.

Type of Review: Revision.

Title: Liabilities to, and Claims on, Foreigners of Reporting Bank, Broker or Dealer (Form BQ–1, Part 1); and Domestic Customers' Claims on Foreigners Held by Reporting Bank, Broker or Dealer, Denominated in Foreign Currencies.

Description: Form BQ–2 is required by law and is designed to collect timely information on international portfolio capital movements, including liabilities to, and claims on, foreigners of banks, brokers and dealers, and custody claims on foreigners other depository institutions, brokers and dealers, that are denominated in foreign currencies. This information is necessary for compiling U.S. balance of payments, for calculating U.S. international investment position, and for formulating U.S. international financial and monetary policies.

Respondents: Business or other for-profit.

Estimated Number of Respondents: 110.

Estimated Burden Hours Per Respondent: 4 hours, 30 minutes.

Frequency of Response: Quarterly.

Estimated Total Reporting Burden: 2,520 hours.

Clearance Officer: Lois K. Holland, (202) 622–1563, Departmental Offices, Room 2110, 1425 New York Avenue, N.W., Washington, DC 20220.

OMB Reviewer: Alexander T. Hunt, (202) 395–7860, Office of Management and Budget, Room 10202, New Executive Office Building, Washington, DC 20503.

Lois K. Holland,

Departmental Reports Management Officer.

[FR Doc. 00–26796 Filed 10–18–00; 8:45 am]

BILLING CODE 4810–25–U

DEPARTMENT OF THE TREASURY

Submission for OMB Review; Comment Request

October 12, 2000.

The Department of the Treasury has submitted the following public information collection requirement(s) to OMB for review and clearance under the Paperwork Reduction Act of 1995, Public Law 104–13. Copies of the submission(s) may be obtained by calling the Treasury Bureau Clearance Officer listed. Comments regarding this information collection should be addressed to the OMB reviewer listed and to the Treasury Department Clearance Officer, Department of the Treasury, Room 2110, 1425 New York Avenue, NW., Washington, DC 20220.

DATES: Written comments should be received on or before November 20, 2000 to be assured of consideration.

Internal Revenue Service (IRS)

OMB Number: 1545–1130.

Form Number: IRS Form 8816.

Type of Review: Revision.

Title: Special Loss Discount Account and Special Estimated Tax Payments for Insurance Companies.

Description: Form 8816 is used by insurance companies claiming an additional deduction under IRC section 847 to reconcile heir special loss discount and special estimated tax payments, and to determine their tax benefit associated with the deduction. The information is needed by the IRS to determine that the proper additional deduction was claimed and to insure the proper amount of special estimated tax was computed and deposited.

Respondents: Business or other for-profit.

Estimated Number of Respondents/Recordkeepers: 3,000.

Estimated Burden Hours Per Respondent/Recordkeeper:

Recordkeeping—4 hr., 18 min.

Learning about the law or the form—1 hr., 0 min.

Preparing, copying, assembling and sending the form to the IRS—1 hr., 6 min.

Frequency of Response: Annually.

Estimated Total Reporting/Recordkeeping Burden: 19,200 hours.

OMB Number: 1545–1550.

Notice Number: Notice 97–45.

Type of Review: Extension.

Title: Highly Compensated Employee Definition.

Description: This notice provides guidance on the definition of a highly compensated employee within the meaning of section 414(q) of the Internal Revenue Code as simplified by section 1431 of the Small Business Job Protection Act of 1996, including an employer's option to make a top-paid group election under section 414(q)(1)(B)(ii).

Respondents: Business or other for-profit, not-for-profit institutions.

Estimated Number of Recordkeepers: 218,683.

Estimated Burden Hours Per Recordkeeper: 18 minutes.

Estimated Total Recordkeeping Burden: 65,605 hours.

Clearance Officer: Garrick Shear, Internal Revenue Service, Room 5244, 1111 Constitution Avenue, NW, Washington, DC 20224.

OMB Reviewer: Alexander T. Hunt (202) 395–7860, Office of Management and Budget, Room 10202, New Executive Office Building, Washington, DC 20503.

Lois K. Holland,

Department Reports Management Officer.

[FR Doc. 00–26797 Filed 10–18–00; 8:45 am]

BILLING CODE 4830–01–M

DEPARTMENT OF THE TREASURY

Internal Revenue Service

Advisory Committee on the Special Enrollment Examination; Notice of Partially Closed Meeting

AGENCY: Internal Revenue Service, Office of Director of Practice, Treasury.

ACTION: Notice of partially closed Federal advisory committee meeting.

SUMMARY: Notice is given of a partially closed meeting of the Advisory Committee on the Special Enrollment Examination.

DATES: The meeting will be held Wednesday, November 8 and Thursday, November 9, 2000 from 8 a.m. to 5 p.m. each day. Written requests to speak at the meeting or to attend the meeting must be received no later than November 1, 2000.

ADDRESSES: The meeting will be held at the Radisson Barcelo Hotel, 8444 International Drive, Orlando, Florida. Written requests to speak at the meeting or to attend the meeting must be mailed or faxed to: Internal Revenue Service, Office of Director of Practice, C:AP:DP, Attn: Kathy Hughes, 1111 Constitution Avenue, NW, Washington, DC 20224; fax number 202–694–1934.

FOR FURTHER INFORMATION CONTACT: Kathy Hughes, Designated Federal Officer, Advisory Committee on the Special Enrollment Examination, at 202–694–1851.

SUPPLEMENTARY INFORMATION: Pursuant to section 10(a)(2) of the Federal Advisory Committee Act (''FACA''), 5 U.S.C. App., notice is hereby given that the Advisory Committee on the Special Enrollment Examination (''SEE'') will meet Wednesday, November 8, and Thursday, November 9, 2000 from 8:00 a.m. to 5:00 p.m. each day. The meeting will be held at the Radisson Barcelo Hotel, 8444 International Drive, Orlando, Florida.

On November 8, the Committee will review and discuss the following topics: enrollment application processing; administration of the 2000 SEE; and progress on the 2001 SEE. On November 9, the Committee will review and discuss the following topic: requirements for continuing professional education.

Under section 10(a)(1) of FACA advisory committee meetings are generally open to the public. However, under section 10(d) of FACA, the head of an agency to which an advisory committee reports may determine in writing that all or any portion of a meeting shall be closed to the public in accordance with section (c) of the Government in the Sunshine Act, 5 U.S.C. 552b. A written determination has been made that pursuant to section (c)(9)(B) of the Government in the Sunshine Act the November 8 portions of the meeting dealing with the Committee's review and discussion of the administration of the 2000 SEE and progress on the 2001 SEE should be closed to the public.

November 8 portions of the meeting dealing with the Committee's review and discussion of enrollment application processing and November 9 portions of the meeting dealing with the Committee's review and discussion of requirements for continuing professional education will be open to public observation.

Beginning at 3:30 on Thursday, November 9, interested persons may speak at the meeting in accordance with the following limitations. Speakers' remarks must be germane to the topics listed above or germane to the enrolled agent program. Remarks must be limited to no more than 10 minutes. Persons wishing to speak must send Kathy Hughes, the Designated Federal Officer, a written request, and the text or outline of their remarks, prior to the meeting in order to allow for the compilation of a speakers list. Speakers will be entered on the list in order of the receipt of their requests. No more than nine requests will be accepted. Speakers will be notified of their position on the list, or in case more than nine requests are received, that their request will not be granted.

Persons interested in attending the public session (but not speaking) must also send Ms. Hughes a written request prior to the meeting in order to allow for adequate seating. Every effort will be made to accommodate all requests for attendance.

Written requests to speak and written requests to attend must be received no later than November 1, 2000. Mail or fax requests to: Internal Revenue Service, Office of Director of Practice, C:AP:DP, Attn: Kathy Hughes, 1111 Constitution Avenue, NW, Washington, DC 20224; fax number 202–694–1934.

Any interested person may also submit a written statement for consideration by the Director of Practice and the Committee. Such statements should be mailed or faxed to the address or fax number listed above.

Dated: October 10, 2000.

Charles O. Rossotti,

Commissioner of Internal Revenue.

[FR Doc. 00–26943 Filed 10–18–00; 8:45 am]

BILLING CODE 4830–01–P

Federal Register

Thursday,
October 19, 2000

Part II

Department of Transportation

Federal Aviation Administration

14 CFR Parts 401, 417, and 420

Licensing and Safety Requirements for Operation of a Launch Site; Rule

DEPARTMENT OF TRANSPORTATION

Federal Aviation Administration

14 CFR Parts 401, 417, and 420

[Docket No. FAA–1999–5833; Amendment No. 401–2, 417–1 and 420–1]

RIN 2120–AG15

Licensing and Safety Requirements for Operation of a Launch Site

AGENCY: Federal Aviation Administration (FAA), DOT.

ACTION: Final rule; request for comments on handling of solid propellants and cooperation with the National Transportation Safety Board.

SUMMARY: The Department of Transportation's (DOT or the Department) Federal Aviation Administration (FAA) amends its commercial space transportation licensing regulations to add licensing and safety requirements for the operation of a launch site. To date, commercial launches have occurred principally at federal launch ranges under safety procedures developed by federal launch range operators. To enable the development and use of launch sites that are not operated by a federal launch range, rules are needed to establish specific licensing and safety requirements for operating a launch site, whether that site is located on or off of a federal launch range. These rules will provide licensed launch site operators with licensing and safety requirements to protect the public from the risks associated with activities at a launch site.

DATES: *Effective Date:* December 18, 2000. An application pending at the time of the effective date must conform to any new requirements of this rulemaking as of the effective date. All license terms and conditions, and all safety requirements of this rulemaking also apply as of the effective date.

Comment Date: Comments on handling of solid propellants and cooperation with the National Transportation Safety Board must be submitted on or before December 18, 2000.

ADDRESSES: Address your comments to the Docket Management System, U.S. Department of Transportation, Room Plaza 401, 400 Seventh Street, SW., Washington, DC 20590–0001. You must identify the docket number FAA–1999–5833 at the beginning of your comments, and you should submit two copies of your comments. If you wish to receive confirmation that FAA received your comments, include a self-addressed, stamped postcard.

You may also submit comments through the Internet to http://dms.dot.gov. You may review the public docket containing comments to these regulations in person in the Dockets Office between 9:00 a.m. and 5:00 p.m., Monday through Friday, except Federal holidays. The Dockets Office is on the plaza level of the NASSIF Building at the Department of Transportation at the above address. Also, you may review public dockets on the Internet at http://dms.dot.gov.

FOR FURTHER INFORMATION CONTACT: J. Randall Repcheck, Licensing and Safety Division (AST–200), Commercial Space Transportation, Federal Aviation Administration, 800 Independence Avenue, Washington, DC 20591; telephone (202) 267–8602; or Laura Montgomery, Office of the Chief Counsel (AGC–250), FAA, 800 Independence Avenue, Washington, DC 20591; telephone (202) 267–3150.

SUPPLEMENTARY INFORMATION:

Comments Invited

In the NPRM, the FAA proposed explosive siting requirements for facilities on a launch site that would handle solid and liquid propellants and other explosives. The FAA did not propose rules for solid explosives other than ''division 1.3,'' as described below.

As noted in the NPRM, the FAA is adopting the United Nations Organization (UNO) classification system for the transport of dangerous goods. The hazard classification system consists of nine classes for dangerous goods, of which explosives are included as UNO ''Class 1, Explosives.'' Class 1 explosives are further subdivided into six ''divisions'' based on the character and predominance of the associated hazards and on the potential for causing casualties or property damage. Two explosive divisions that are likely to be present on a launch site are division 1 and division 3, referred to as division 1.1 and 1.3, respectively. Division 1.1 consists of explosives that have a mass explosion hazard, and division 1.3 consists of explosives that have a fire hazard and either a minor blast hazard or a minor projection hazard or both, but not a mass explosion hazard.

In the NPRM, the FAA proposed criteria only for division 1.3 because the FAA believed that the only solid explosives for commercial launches that would likely affect separation distances on a launch site were division 1.3 propellants. The FAA noted that although launch vehicles frequently have components incorporating division 1.1 explosives, such as those used to initiate flight termination systems, the quantity is small. The FAA also noted that division 1.1 explosives would not likely be present in sufficient quantities to affect the application of Q–D criteria. The only division 1.1 solid rocket motors existing today are from old military missiles, which are not likely to be used at a commercial launch site.

One government commenter, the 45th Space Wing Range Safety Engineering Support (45SW/SESE), pointed out that this was not a correct assumption, and the FAA agrees. As noted by the 45SW/SESE, experience with explosive siting at Cape Canaveral Air Force Station shows that division 1.1 explosives are often significant enough to influence explosive site plans.

Accordingly, section 420.65, Handling of Solid Propellants, now includes requirements for division 1.1 explosives. Because this change is being adopted without prior notice and public comment, interested persons are also invited to submit written comments on section 420.65.

The FAA also includes a new requirement in this rulemaking explicitly requiring a launch site operator licensee to cooperate with the National Transportation Safety Board in section 420.59 for launch accidents as well as for launch site accidents. The FAA will implement this change without prior notice and comment and therefore invites interested persons to submit written comments on section 420.59. Pending the evaluation of the public comments, the FAA has decided to proceed with due diligence to implement its requirements.

The FAA will consider and respond to comments on the new provisions. The FAA will consider all comments received, and will publish in the **Federal Register** a summary of the disposition of those comments and, if appropriate, changes to the rule that may result from consideration of those comments.

Comments must include the regulatory docket or amendment number and must be submitted in triplicate to the address above. The FAA will review all comments received and will file all comments in the public docket. The docket is available for public inspection before and after the comment closing date.

Commenters who want the FAA to acknowledge receipt of their comments submitted in response to this final rule must include a preaddressed, stamped postcard with those comments on which the following statement is made: ''Comments to Docket No. FAA–1999–5833.'' The postcard will be date-

stamped by the FAA and mailed to the commenter.

Availability of Final Rules

You can get an electronic copy using the Internet by taking the following steps:

(1) Go to the search function of the Department of Transportation's electronic Docket Management System (DMS) Web page (http://dms.dot.gov/search).

(2) On the search page type in the last four digits of the Docket number shown at the beginning of this rulemaking document. Click on ''search.''

(3) On the next page, which contains the Docket summary information for the Docket you selected, click on the final rule.

You can also get an electronic copy using the Internet through FAA's web page at http://www.faa.gov/avr/arm/nprm/nprm.htm or the **Federal Register's** web page at http://www.access.gpo.gov/su_docs/aces/aces140.html.

You can also get a copy by submitting a request to the Federal Aviation Administration, Office of Rulemaking, ARM–1, 800 Independence Avenue SW., Washington, DC 20591, or by calling (202) 267–9680. Make sure to identify the amendment number or docket number of this final rule.

Small Business Regulatory Enforcement Fairness Act

The Small Business Regulatory Enforcement Fairness Act (SBREFA) of 1996 requires the FAA to comply with small entity requests for information or advice about compliance with statutes and regulations within its jurisdiction. Therefore, any small entity that has a question regarding this document may contact its local FAA official, or the person listed under **FOR FURTHER INFORMATION CONTACT.** You can find out more about SBREFA on the Internet at our site, http://www.gov/avr/arm/sbrefa.htm. For more information on SBREFA, e-mail us *9–AWA–SBREFA@faa.gov.*

Outline of Final Rule

I . Background
A. The FAA's Commercial Space Transportation Licensing Role
B. Growth and Current Status of Launch Site Industry
C. Current Practices
II. Summary of the Regulations and Discussion of Comments
A. Overview
B. Environment
C. Policy
D. Explosive Site Plan Review
E. Explosive Mishap Prevention Measures
F. Launch Site Location Review
G. License Conditions
H. Operational Responsibilities
III. Part Analysis
IV. Required Analyses

I. Background

The Commercial Space Launch Act of 1984, as codified at 49 U.S.C. Subtitle IX—Commercial Space Transportation, ch. 701—Commercial Space Launch Activities, 49 U.S.C. 70101–70121 (the Act), authorizes the Secretary of Transportation to license a launch or the operation of a launch site carried out by a U.S. citizen or within the United States. 49 U.S.C. 70104, 70105. The Act directs the Secretary to exercise this responsibility consistent with public health and safety, safety of property, and the national security and foreign policy interests of the United States. 49 U.S.C. 70105. On August 4, 1994, a National Space Transportation Policy reaffirmed the government's commitment to the commercial space transportation industry and the critical role of the Department of Transportation (DOT) in encouraging and facilitating private sector launch activities. A National Space Policy released on September 19, 1996, notes and reaffirms that DOT is responsible as the lead agency for regulatory guidance pertaining to commercial space transportation activities.

A. The FAA's Commercial Space Transportation Licensing Role

On November 15, 1995, the Secretary of Transportation delegated commercial space licensing authority to the Federal Aviation Administration. The FAA licenses commercial launches and the operation of launch sites pursuant to the Act and implementing regulations at 14 CFR Ch. III. The first commercial launch licensing regulations were issued in April 1988, 53 FR 11004, when no commercial launches had yet taken place. Accordingly, DOT established a flexible licensing process intended to be responsive to an emerging industry while ensuring public safety. The Department noted that it would ''continue to evaluate and, when necessary, reshape its program in response to growth, innovation, and diversity in this critically important industry.'' 53 FR 11006.

Under the 1988 regulations, DOT implemented a case-by-case approach to evaluating launch and launch site operator license applications. At the time, it was envisioned that most commercial launches would take place from federal launch ranges, which imposed extensive ground and flight safety requirements on launch operators, pending the development of commercial launch sites. The federal launch ranges provided commercial launch operators with facilities and launch support, including flight safety services.

Since 1988, DOT and now the FAA have taken steps designed to simplify further the licensing process for launch operators. The regulatory and licensing emphasis during the past decade has been on launch operators. The emergence of a commercial launch site sector has only become a reality during the past few years.

B. Growth and Current Status of Launch Site Industry

The United States government has, since the 1950s, built, operated, and maintained a space launch infrastructure for launching satellites into space. Much of the demand for and use of these launch sites has traditionally come from U.S. military and civil government agencies. Beginning in the early 1980s, a number of the government-operated launch sites began providing support for commercial launch activities as well, with the National Aeronautics and Space Administration (NASA) acting as the primary intermediary for providing launch services to satellite operators. Following the Challenger accident, a White House decision in August 1986 allowed launch customers to solicit bids directly from the launch vehicle builders who would, in turn, lease launch facilities from NASA or the United States Air Force (USAF). This decision, coupled with the 1984 U.S. Commercial Space Launch Act and its 1988 amendments, did much to foster commercial launch business, which continues to grow to this day.

The number of commercial space launches has steadily grown over the years since the first licensed commercial launch in 1989. From March 29, 1989 to July 28, 2000, 130 licensed launches have taken place. Launch vehicles have included traditional orbital launch vehicles such as the Atlas, Titan and Delta, as well as suborbital vehicles such as the Starfire. New vehicles using traditional launch techniques include Lockheed Martin Corporation's (Lockheed Martin) Atlas III and Athena, EER's Conestoga, Orbital Sciences Corporation's (Orbital) Taurus, and The Boeing Company's (Boeing) Delta III. Unique vehicles such as Orbital's Pegasus and the Zenit 3–SL of Sea Launch Limited Partnership (Sea Launch), launched from a modified oil rig located in the Pacific Ocean, are included in this count. New launch vehicles are proposed every year. On the horizon are Lockheed Martin's Atlas V

and Boeing's Delta IV. A number of companies are proposing partially and fully reusable launch vehicles. In addition, some companies are participating in partnership with NASA to develop X–33 and X–34 launch vehicles incorporating reusable and single-stage-to-orbit technology, a partnership which could result in vehicles for commercial use.

The launch site industry, the focus of this final rule, has also made progress. Commercial launch site operations are coming on line with the stated goal of providing flexible and cost-effective facilities both for existing launch vehicles and for new vehicles. When the commercial launch industry began, commercial launch companies based their launch operations chiefly at federal launch ranges operated by the Department of Defense (DOD) and the National Aeronautics and Space Administration (NASA). Federal launch ranges that have supported licensed launches include the Eastern Range, located at Cape Canaveral Air Force Base in Florida (CCAFB), and the Western Range located at Vandenberg Air Force Base (VAFB), in California, both operated by the U.S. Air Force; Wallops Flight Facility in Virginia, operated by NASA; White Sands Missile Range (WSMR) in New Mexico, operated by the U.S. Army; and the Kauai Test Facility in Hawaii, operated by the U.S. Navy. Federal launch ranges provide the advantage of existing launch infrastructure and range safety services. Launch companies are able to obtain a number of services from a federal launch range, including radar, tracking and telemetry, flight termination and other launch services.

Today, most commercial launches still take place from federal launch ranges; however, this pattern may change as other launch sites become more prevalent. On September 19, 1996, the FAA granted the first license to operate a launch site to Spaceport Systems International to operate California Spaceport. That launch site is located within VAFB. Three other launch site operators have received licenses. Spaceport Florida Authority (SFA) received an FAA license to operate Launch Complex 46 at CCAS as a launch site. Virginia Commercial Space Flight Authority (VCSFA) received a license to operate Virginia Spaceflight Center (VSC) within NASA's Wallops Flight Facility. Most recently, Alaska Aerospace Development Corporation (AADC) received a license to operate Kodiak Launch Complex (KLC) as a launch site on Kodiak Island, Alaska. It is evident from this list that federal launch ranges still play a role in the licensed operation of a number of launch sites. California Spaceport, Spaceport Florida and VSC are located on federal launch range property. Two launches each have taken place from California Spaceport, KLC, and SFA.

Other commercial launch sites are being considered in other states. The New Mexico Office of Space Commercialization proposes to operate Southwest Regional Spaceport adjacent to the White Sands Missile Range as a site for reusable launch vehicles. The State of Montana is proposing to fly reusable launch vehicles from a site near Great Falls, Montana and Malmstrom Air Force Base. The state of Nevada is supporting the development of a launch site at the Nevada Test Site, Nye County, Nevada. The State of New Mexico proposes to construct and operate the Southwest Regional Spaceport (SRS) located in south central New Mexico for use by private companies conducting commercial space activities and operations. The State of Texas has enabled the development of a commercial Spaceport for reusable launch vehicles. Lastly, in Utah, the Wah Wah Valley Interlocal Cooperation Entity, proposes to construct and operate a commercial launch site utilizing approximately 70,000 acres of Utah State Trust lands located 30 miles southwest of Milford, Utah.

Whether launching from a federal launch range, a launch site located on a federal launch range, or a non-federal launch site, a launch operator is responsible for ground and flight safety under its FAA license. At a federal launch range a launch operator must comply with the rules and procedures of the federal launch range. The safety rules, procedures and practice, in concert with the safety functions of the federal launch ranges, have been assessed by the FAA, and found to satisfy the majority of the FAA's safety concerns. In contrast, when launching from a non-federal launch site, a launch operator's responsibility for ground and flight safety takes on added importance. In the absence of federal launch range oversight, it will be incumbent upon each launch operator to demonstrate the adequacy of its ground and flight safety to the FAA.

C. Current Practices

Because of the time and investment involved in bringing a commercial launch facility into being, several entities that have been planning to establish these facilities asked the DOT for guidance concerning the information that might be requested as part of an application for a license to operate a launch site. In response to these requests, DOT's then Office of Commercial Space Transportation (Office) published ''Site Operators License, Guidelines for Applicants,'' on August 8, 1995, as guidance for potential launch site operators. The guidelines described the information that DOT, and then the FAA, expected from an applicant for a license to operate a commercial launch site. This information included launch site location information, a hazard analysis, and a launch site safety operations document that governed how the facility would be operated to ensure public safety and the safety of property. The Office intended that the guidelines would assist an applicant with the parts of the application that are critical to assessing the suitability of the launch site location, the applicant's organization, and the facility for providing safe operations.

The Office issued the guidelines as an interim measure for potential developers of launch sites pending this rulemaking, and the guidelines describe the information that the FAA requests of an applicant as part of its application for a license to operate a launch site. The pace of development of the launch site industry has resulted in the FAA describing the process and requirements for applications for launch site operator licenses under the guidelines. As noted above, the FAA issued its first license to operate a launch site to Spaceport Systems International for the operation of California Spaceport. The FAA issued this license under its general authority under 49 U.S.C. 70104 and 70105 and 14 CFR Ch. III to license the operation of a launch site. Because the operation of California Spaceport as a launch site occurs at a federal launch range, the U.S. Air Force plays a significant role in California Spaceport's safety process. In fact, the FAA was able to review the Spaceport Systems International application expeditiously because the applicant certified its intention to observe the safety requirements currently applied by the Western Range and contained in ''Eastern and Western Range 127–1, Range Safety Requirements (EWR 127–1),'' (Mar. 1995).[1] The FAA determined that applicant compliance with EWR 127–1, together with Air Force approval of other important elements of the operation of a launch site protected public health and safety and the safety of property. In general, the FAA deems the compliance by a licensed launch site

[1] EWR 127–1 is updated on an ongoing basis. The latest version of these requirements may be found at http://www.pafb.af.mil/450SW/.

operator with these requirements in combination with other safety practices imposed by a federal launch range as acceptable for purposes of protecting the public and property from hazards associated with launch site activities at a licensed launch site operator's facilities. In 1997, the FAA entered into a Memorandum of Agreement with Department of Defense and National Aeronautics and Space Administration regarding safety oversight of licensed launch site operators located on federal launch ranges.

On June 25, 1999, the FAA released a notice of proposed rulemaking, *Licensing and Safety Requirements for Operation of a Launch Site,* 64 FR 34316 (Jun. 25, 1999). This will be referred to throughout this document as the Launch Site NPRM.

Comparison of the Guidelines and the Final Rule

The existing guidelines will no longer be in effect as of the effective date of this final rule. A comparison of some of the similarities and differences may therefore prove of assistance. The one aspect of the licensing process that will not change is that the FAA will issue a license to operate a launch site only if the operation of the launch site will not jeopardize the public health and safety, the safety of property, or national security or foreign policy interests of the United States. The guidelines were flexible and were intended to identify the major elements of an application and lead the applicant through the application process with the FAA. The final rule codifies the requirements that must be met before a license will be issued.

The guidelines and the final rule share some common elements, namely, the need for the applicant to supply information to support the FAA's environmental determination under the National Environmental Policy Act (NEPA) and the FAA's policy review that addresses national security and foreign policy issues. These requirements are discussed in detail below, in the description of the final regulations. Under the final regulations, the information requirements for these reviews remain for the most part unchanged from the guidelines.

A review of the suitability of the proposed location of the launch site is an important component of both the guidelines and the final regulations. Although both approaches call for a site location review, the reviews differ in breadth and specificity. The guidelines request an applicant to provide information regarding geographic characteristics, flight paths and impact areas and the meteorological environment. To describe a launch site's geographic characteristics, an applicant is requested to provide information regarding the launch site location, size, and shape, its topographic and geological characteristics, its proximity to populated areas, and any local commercial and recreational activities that may be affected by launches such as air traffic, shipping, hunting, and offshore fishing. An applicant also provides planned possible flight paths and general impact areas designated for launch. If planned flight corridors overfly land, the guidelines request that an applicant provide flight safety analyses for generic sets of launch vehicles and describe, where applicable, any arrangements made to clear the land of people prior to launch vehicle flight. With respect to the meteorological environment, the guidelines request an applicant to provide data regarding temperature, surface and upper wind direction and velocity, temperature inversions, and extreme conditions that may affect the safety of launch site operations. Under the guidelines, an application includes the frequency (average number of days for each month) of extremes in wind or temperature inversion that could have an impact on launch.

In contrast to the guidelines, the final rules require an applicant to use specified methods to demonstrate the suitability of the launch site location for launching at least one type of launch vehicle, including orbital, guided sub-orbital, or unguided sub-orbital expendable launch vehicles, and reusable launch vehicles. Each proposed launch point on the launch site must be evaluated for each type of launch vehicle that the applicant wishes to have launched from the launch point. An applicant is provided with a choice of methods to develop a flight corridor for a representative launch of an orbital or guided sub-orbital expendable launch vehicle, or to develop a set of impact dispersion areas for a representative launch of an unguided sub-orbital expendable launch vehicle. If a flight corridor or set of impact dispersion areas exists that does not encompass populated areas, no additional analysis is required. Otherwise, an applicant is required to conduct a risk analysis to demonstrate that the risk to the public from a representative launch does not exceed a casualty expectation (E_c) of 30×10^{-6}. The FAA will review the applicant's analyses to ensure the applicant's process was correct, and will approve the launch site location if the E_c risk criteria were met.

Under either the guidelines or the final regulations, little or no launch site location review is needed if the applicant proposes to locate a launch site at a federal launch range. The fundamental purpose of the FAA's proposed launch site location review— to determine whether a launch may potentially take place safely from the proposed launch site— has been amply demonstrated at each of the ranges. Exceptions may occur if a prospective launch site operator plans to use a launch site at a federal launch range for launches markedly different from past federal launch range launches, or if an applicant proposes a new launch point from which no launch has taken place.

The guidelines and final regulations differ markedly in their approach to ground and flight safety. For ground safety under the guidelines, applicants perform a hazard analysis and develop a comprehensive ground safety plan and a safety organization. Explosive safety is part of the analysis and safety plan. In contrast, the final regulations require the submission of an explosive site plan, but impose fewer operational ground safety responsibilities on a launch site operator. For flight safety, under the guidelines and final rules, a launch site operator license contains minimal flight safety responsibilities. The FAA assigns almost all responsibility for flight safety and significant ground safety responsibility to a licensed launch operator. Extensive ground and flight safety requirements will accompany a launch license. This does not mean a launch site operator cannot offer flight safety services or equipment to its customers. However, the adequacy of such services and equipment typically will be assessed in the FAA's review of a launch license application.

II. Summary of the Regulations and Discussion of Comments

With this rulemaking, the FAA creates in 14 CFR Chapter III a new part 420 to contain the requirements for obtaining and possessing a license to operate a launch site. If a prospective launch site operator proposes to offer its launch site to others, that person must obtain a license to operate a launch site.

Part 420 does not apply in two notable situations. A launch operator operating a private site for its own launches does not need a license to operate a launch site because its launch license would cover the safety issues associated with the launch site. A person wishing to operate a site to support amateur rocket activities, as defined in 14 CFR 401.5, also does not need a license to operate a launch site because the launches taking place from

the site are exempt from AST's regulations.

By means of operational, explosive safety, and site location requirements, the FAA's regulations will address public safety issues associated with launches that take place from a launch site whose operation the FAA has licensed. Additionally, the FAA will address environmental issues, and will have international obligations and national security interests reviewed by the appropriate agencies, in the course of a license review. Environmental review may precede or take place concurrently with the licensing process.

The grant of a license to operate a launch site does not guarantee that a launch license will be granted for any particular launch proposed for the site. All launches will be subject to separate FAA review and licensing.

AST received comments from 11 members of the public and one government organization. The one government commenter was the 45th Space Wing Range Safety Engineering Support (45SW/SESE). The public commenters were:

—ACTA, Inc. [2]
—New Mexico Office for Space Commercialization
—Kistler Aerospace Corporation
—Lockheed Martin Corporation
—National Fire Protection Association
—Don A. Nelson
—Nelson Engineering Co.
—Oklahoma Aeronautics and Space Commission
—Christopher Shove, Ph.D.
—Space Access, LLC
—Texas Aerospace Commission

A. Overview

The FAA's approach to licensing the operation of a launch site focuses on five areas of concern critical to ensuring that operation of a launch site will not jeopardize public health and safety, the safety of property, U.S. national security or foreign policy interests or international obligations of U.S. interests. These reviews encompass the environment, policy considerations, the siting of explosives and other explosive safety measures, the safety of a launch site location, and operational responsibilities.

Part 420 is divided into four subparts. Subpart A includes the scope and applicability of the part, and definitions applicable to the part. Subpart B includes the criteria and information requirements for obtaining a license. Subpart C lists the terms and conditions of a license to operate a launch site. Subpart D lists the other responsibilities of a licensee.

Part 420 separates the requirements to obtain a license from the responsibilities of a licensee. Much of the information required by subpart B pertains to how the applicant will meet its responsibilities in accordance with subpart D.

Under the regulations, an applicant is required to provide the FAA with information sufficient to conduct environmental and policy reviews and determinations. An applicant is also required to submit an explosive site plan that shows the location of all explosive hazard facilities and distances between them, and the distances to public areas.

The regulations provide an applicant options for proving to the FAA that a launch could be conducted from the site without jeopardizing public health and safety. The requirement for a launch site location approval would not normally apply to an applicant who proposes to operate an existing launch point at a federal launch range, unless the applicant plans to use a launch point different than used previously by the federal launch range, or to use an existing launch point for a different type or larger launch vehicle than used in the past. The fact that launches have taken place safely from any particular launch point at a federal launch range may provide the same demonstration that is accomplished by the FAA's launch site location review: namely, a showing that launch may occur safely from the site.

The FAA is imposing specific operational ground safety responsibilities on a licensed launch site operator, and requires that a license applicant demonstrate how those requirements will be met. A launch site operator licensee's responsibilities include: preventing unauthorized public access to the site; properly preparing the public and customers to visit the site; informing customers of limitations on use of the site; scheduling and coordinating hazardous activities conducted by customers; maintaining agreements with the U.S. Coast Guard and with the FAA regional office having jurisdiction over the airspace through which launches will take place and among other measures, the issuance of a Notice to Mariners and Notice to Airmen, respectively, prior to a launch from the launch site; and notifying adjacent property owners and local jurisdictions of the pending flight of a launch vehicle. Part 420 also contains launch site operator responsibilities with regard to record keeping, license transfer, compliance monitoring, accident investigation and explosives. Other federal government agencies have jurisdiction over a number of ground safety issues, and the FAA does not intend to duplicate their efforts.[3]

Discussion of Comments Regarding Overview

A few commentors provided comments that focussed on the FAA's regulatory approach.

Space Access believed that instead of focussing on the launch site location, the rule should put primary interest on the activity occurring on a site, including preparation for a launch, launch, and any activity or process conducted on or near the site that might endanger the public health and safety. *Space Access* at 1. The FAA agrees, but believes that a launch site location analysis is necessary in order to determine whether a launch could safely take place from the location selected. As noted in the NPRM, the FAA does not plan to license the operation of a launch site from which even a hypothetical launch could not take place and has devised the location review to avoid such an eventuality. The other requirements in part 420, in conjunction with the ground and flight safety requirements of a launch license, should address the activity occurring on a site.

Space Access also notes that the rule must achieve minimum safety standards but not require excessive agency

[2] ACTA, Inc. divided its comments into those from ACTA itself and those from ACTA staff.

[3] The U.S. Occupational Safety and Health Administration (OSHA) and the U.S. Environmental Protection Agency (EPA) play a role in regulating ground activities at a launch site. OSHA regulations cover worker safety issues, and may, as a by-product, help protect public safety as well. One provision of particular note is 29 CFR 1910.119, process safety management of highly hazardous chemicals (PSM). The requirements of the PSM standard are intended to eliminate or mitigate the consequences of releases of highly hazardous chemicals that may be toxic, reactive, flammable, or explosive. Management controls are emphasized to address the risks associated with handling or working near hazardous chemicals. These requirements may apply to some launch site and launch operators. EPA regulations are designed to protect the public health and safety from releases of chemicals. One regulation of note is 40 CFR part 68, Accidental release prevention provisions. It applies to an owner or operator of a stationary source that has more than a threshold quantity of a regulated substance in a process, and requires the owner or operator to develop and implement a risk management program to prevent accidents and limit the severity of any accidents that occur. The EPA rule further requires sources to conduct an offsite consequence analysis to define the potential impacts of worst-case releases and other release scenarios. For any process whose worst-case release would reach the public, the source must develop and implement a prevention program and an emergency response program. Both the EPA and OSHA prevention rules require regulated entities to conduct formal analyses of the risks involved in the use and storage of covered substances and consider all possible ways in which existing systems could fail and result in accidental releases.

oversight or business duplication of effort. *Space Access* at 2. The desire to avoid duplication of effort was also expressed by Kistler Aerospace Corporation and Christopher Shove, Ph.D., a Senior Consultant for Space Data Systems, Inc. Although Kistler commends the FAA for striving to keep the regulatory environment free from redundant requirements levied by multiple agencies, *Kistler Aerospace Corporation* at 2; *Christopher Shove* at 1. Kistler also states that this goal should be expanded to include launch site operators operating out of localities that already address similar concerns through local rules or ordinances.

The FAA agrees that it should not impose requirements that duplicate other federal regulations. That is why there are relatively few operational responsibilities of a launch site licensee in part 420. For example, OSHA and the EPA have many regulations that apply to launch site operators, which the FAA does not duplicate. If an applicant is required to fulfill other safety requirements because of state or local regulations, or rules of property owners, the FAA will work with the applicant to avoid duplication of paper work. However, applicants must meet FAA and other federal standards.

The New Mexico Office for Space Commercialization (NMOSC) thought that the proposed regulations should not relate only to launch operations. NMOSC suggested that the proposed regulations be expanded to include recovery operations. *New Mexico Office for Space Commercialization* at 1. The FAA agrees that recovery operations are important. However, recovery operations are covered in another rulemaking. *Commercial Space Transportation Reusable Launch Vehicle and Reentry Licensing,* 65 FR 56617 (Sept. 19, 2000).

Because the FAA stated in the NPRM that when launching from a non-federal launch site, a launch operator's responsibility for ground and flight safety takes on added importance, NMOSC suggested that the FAA is willing to accept a double standard on safety. NMOSC believes that New Mexico will be treated differently from Florida and California because their launch sites are federal, and New Mexico's is not. *NMOSC* at 2. This is not true. The FAA did not mean to imply that a launch operator has more responsibility for flight safety from a commercial launch site than from a federal launch site. In both cases, the launch operator is responsible for the safety of its flight. The FAA was only pointing out that a launch operator at a non-federal launch site will not be able to depend on an established flight safety infrastructure that currently exists at federal launch ranges.

Lockheed Martin Corporation (LMC) recommended, in the interest of standardization and interoperability, that a launch site operator be required to establish and maintain at its facility a range safety/tracking system that functions at an industry-wide standard and demonstrate that it meets the standard. *LMC* at 4. A launch operator should be required to demonstrate to the FAA that its launch vehicle interfaces with this standardized range safety/tracking system. The FAA agrees on the importance of range safety and tracking for most launch operations. Because launch safety is the responsibility of the launch operator, because interoperability and standardization are business issues about which a launch site operator may wish to make its own decisions, the FAA notes with interest but declines to pursue this suggestion. Although the federal launch ranges offer a standardized form of range safety and tracking, the FAA is reluctant to enshrine particular standards through regulation, especially when the ranges themselves are re-visiting how to provide tracking, transmission and other launch safety services. Nothing precludes a launch site operator from providing such services as well; a launch operator will continue, of course, to remain responsible under its launch license for the safety of the flight of its vehicle, regardless of with whom it contracts for supporting services.

B. Environmental

Licensing the operation of a launch site is a major federal action for purposes of the National Environmental Policy Act, 42 U.S.C. 4321 et seq. As a result, the FAA is required to assess the environmental impacts of constructing and operating a proposed launch site to determine whether these activities will significantly affect the quality of the environment. Because the FAA is responsible under NEPA regulations for preparing an environmental assessment or environmental impact statement (EIS), part 420 requires a license applicant to provide the FAA with sufficient information to conduct an analysis in accordance with the requirements of the Council on Environmental Quality (CEQ) Regulations Implementing the Procedural Provisions of NEPA, 40 CFR parts 1500–1508, and the FAA's Procedures for Considering Environmental Impacts, FAA Order 1050.1D. An applicant will typically engage a contractor with specialized experience in the NEPA process to conduct the study underpinning the FAA's environmental analysis.

The FAA encourages an applicant to begin the environmental review, including the gathering of pertinent information to perform the assessment, early in the planning process, but after the applicant has defined its proposed action and considered feasible alternatives. The FAA will determine whether a finding of no significant impact (FONSI) may be issued after an environmental assessment, or whether an environmental impact statement followed by a record of decision is necessary. An applicant may be subject to restrictions on activities at a proposed launch site. An applicant may acquire property for future use as a launch site; however, absent a FONSI, the FAA must prepare an environmental review that includes consideration of reasonable alternatives to the site. According to the CEQ regulations as interpreted by the courts, an applicant may not use the purchase of a site or construction at the site to limit the array of reasonable alternatives. As a result, an applicant must complete the environmental process before construction or improvement of the site. The FAA will not issue a license if the FAA has not concluded an environmental review in accordance with all applicable regulations and guidelines.

Discussion of Comments Regarding the Environmental Review

Nelson Engineering Co. stated that the X–33 EIS process included overflight and safety issues. Nelson Engineering felt that including overflight and safety issues for licensed activities was a duplication of effort since these safety issues are covered in the license process as well. It noted that the public has the right to know and comment on overflight and safety issues, but it would be best to handle it separate from the EIS process. *Nelson Engineering* at 2. The FAA agrees. Safety issues are better addressed in the licensing process where safety standards exist. When the question of safety comes up during the FAA's environmental review process, the FAA notes in the environmental documentation that safety issues are addressed in the licensing process.

NMOSC commented on the FAA's statement that an applicant may acquire property for future use as a launch site. NMOSC states that according to the CEQ regulations as interpreted by the courts, an applicant may not use the purchase of a site or construction at the site to limit the array of reasonable alternatives. *NMOSC* at 2. The FAA partially agrees with NMOSC in that purchasing a site with the intent to

build a launch facility, without looking at other possible locations, limits the launch site selection and evaluation of alternatives and is contrary to the requirements of the National Environmental Protection Act (NEPA). NEPA requires an applicant to show that it looked at several feasible sites based on certain criteria and that it chose one of those sites as the preferred or selected alternative. However, an applicant can in fact purchase property for future use as a launch site if the applicant can show that it looked at several sites and picked a particular site based on certain parameters. It must also document the evaluation of those alternative sites.

C. Policy

The FAA conducts a policy review of an application for a license to operate a launch site to determine whether operation of the proposed launch site would jeopardize national security, foreign policy interests, or international obligations of the United States. The FAA conducts the policy review in coordination with other federal agencies that have responsibility for national and international interests. The Department of Defense is consulted to determine whether a license application presents any issues affecting national security. The Department of State reviews an application for issues affecting foreign policy or international obligations. Other agencies, such as NASA, are consulted as appropriate. By this rulemaking, the regulations require an applicant to supply information relevant to the FAA's policy approval, including, for example, identification of foreign ownership of the applicant. The FAA will obtain other information required for a policy review from information submitted by an applicant in other parts of the application. During a policy review, the FAA will consult with an applicant regarding any questions or issues before making a final determination. An applicant would have the opportunity to address any questions before completion of the review.

No comments regarding policy review were received and no changes have been made to part 420 from the Launch Site NPRM.

D. Explosive Site Plan Review

The final rules establish criteria and procedures for the siting of facilities at a launch site where solid propellants, liquid propellants, and other explosives are located to prepare launch vehicles and payloads for flight. These criteria and procedures are commonly referred to as quantity-distance (Q–D) requirements because they provide minimum separation distances between explosive hazard facilities, surrounding facilities and locations where the public may be present on the basis of the type and quantity of explosive material located within the area. Minimum prescribed separation distances are necessary to protect the public from explosive hazards on a launch site so that the effects of an explosion do not reach the public.

An applicant must provide the FAA with an explosive site plan that demonstrates compliance with the Q–D requirements. Because the FAA must approve this plan, applicants are cautioned not to begin construction of facilities requiring an explosive site plan until obtaining FAA approval. Note also that the Q–D requirements do not address any toxic hazards. Toxic hazards may be mitigated through procedural means, and the FAA addresses toxic hazards in a separate rulemaking on licensing and safety requirements for launch. If a toxic hazard is a controlling factor in siting, a prudent launch site operator will address the issue when preparing its site plan.

The quantity-distance criteria are a critical mitigation measure required in a launch site operator application to provide the public protection from ground operations at a launch site. The final rules have other mitigation measures, including launch site operator responsibilities that address accident prevention measures, and procedural requirements to protect other launch site customers and visitors on the launch site. Any other procedural requirements necessary to protect the public from explosive hazards will be the responsibility of a launch operator under a launch license.[4]

The FAA has made certain changes in response to comments to part 420, from what was proposed in the Launch Site NPRM regarding the explosive site plan requirements. A brief summary of these changes is discussed below and is discussed in further detail in the Part analysis.

- The NPRM did not require an applicant proposing to locate a launch site at a federal launch range to submit an explosive site plan. In the final rule, the applicant must submit an explosive site plan to the federal launch range operator.
- Q–D requirements for hazard class 1.1 were added, including a provision for public traffic route distance.
- The assumption that solid and liquid stages on a launch vehicle would not explode simultaneously has been removed from the Q–D requirements for locating solid and liquid propellants together.
- The explosive site plan requirements were moved from subpart B, Application Requirements, to subpart D, Licensee Responsibility. Although an applicant must complete an explosive site plan to obtain a license, this section was moved because the explosive site plan is a document with which a licensee must comply and keep up to date at all times.
- A provision was added to clarify that explosive siting issues outside the scope of the part 420 requirements will be evaluated by the FAA on an individual basis consistent with industry safety standards.

A discussion of launch site explosive hazards, the reason the FAA is adopting explosive siting criteria, current Q–D standards, the FAA's use of NASA and DOD Q–D standards, other approaches to explosive safety, and the application of ATF, DOD or NASA standards are covered in the Launch Site NPRM. 64 FR at 34320—34322. Solid explosive divisions, future changes in liquid propellant requirements, and solid and liquid bi-propellants at launch pads are discussed below.

Solid Explosive Divisions

The Launch Site NPRM proposed requirements for division 1.3 solid explosives. As noted in the Launch Site NPRM, the FAA is adopting the United Nations Organization (UNO) classification system, a system that governs transport of dangerous goods. The Department of Transportation's Research and Special Programs Administration assigns dangerous goods to the appropriate class in accordance with 49 CFR part 173. The hazard classification system consists of nine classes for dangerous goods, of which ammunition and explosives are included as the UNO ''Class 1, Explosives.'' Class 1 explosives are further subdivided into ''divisions'' based on the character and predominance of the associated hazards and on the potential for causing casualties or property damage. As defined in 49 CFR 173.50:

- *Division 1.1*—consists of explosives that have a mass explosion hazard. A mass explosion is one which affects almost the entire load instantaneously.

[4] A launch license encompasses ground activities involved in the preparation of a launch vehicle for flight at a launch site in the United States. This may include the storage and handling of explosives involved with the handling and assembly of launch vehicles at a launch site.

• *Division 1.2*—consists of explosives that have a projection hazard but not a mass explosion hazard.

• *Division 1.3*—consists of explosives that have a fire hazard and either a minor blast hazard or a minor projection hazard or both, but not a mass explosion hazard.

• *Division 1.4*—consists of explosives that present a minor explosion hazard.

• *Division 1.5*—consists of very insensitive explosives.

• *Division 1.6*—consists of extremely insensitive articles which do not have a mass explosion hazard.

The FAA originally proposed criteria only for division 1.3 because it believed that the only solid explosives for commercial launches that would likely affect separation distances on a launch site were division 1.3 propellants. The FAA noted that although launch vehicles frequently have components incorporating division 1.1 explosives, such as those used to initiate flight termination systems, the quantity is small. The FAA also noted that division 1.1 explosives will not likely be present in sufficient quantities to affect the application of Q–D criteria. The only division 1.1 solid rocket motors existing today are from old military missiles, which are not likely to be used at a commercial launch site.

In response to comments from the 45th Space Wing pointing out the errors underlying this assumption, part 420 now includes quantity-distance requirements for explosive division 1.1 explosives. Compared with explosive division 1.3 explosives, the distances are greater due to their more hazardous nature.

Future Change in Liquid Propellant Requirements

The DOD Explosive Safety Board (DDESB) initiated a DOD Explosive Safety Standard for Energetic Liquids Program, and established an interagency advisory board called the Liquid Propellants Working Group (LPWG). The FAA is a member of this group. A number of possible inconsistencies and irregularities have been identified in the current approach to siting liquid propellants. These include Q–D criteria for most liquid propellants, possible inconsistencies in hazard group and compatibility group definitions, and possible inaccurate characterization of blast overpressure hazards of liquid propellant explosions. The purpose of the LPWG is to address issues of explosive equivalence, compatibility mixing, and quantity-distance criteria, and to develop recommended revisions to DOD STD 6055.9, which addresses liquid propellants and other liquid energetic materials.

The DDESB work is almost completed, and the recommendations of the LPWG should be incorporated in the DOD standard in the near future. Because the DDESB is possibly the best-equipped group in the country to address these issues, the FAA will carefully consider its recommendations. The basic approach outlined in the final rule should not change. However, the DDESB is likely to specify new hazard and compatibility groups, distance values, and equivalency values, and the public may anticipate their eventual consideration and possible adoption by the FAA.

Solid and Liquid Bi-Propellants at Launch Pads

In the Launch Site NPRM, the FAA proposed a special requirement at launch pads for launch vehicles that use liquid bi-propellant and solid propellant components. The required separation distance would be the greater of the distance determined by the explosive equivalent of the liquid propellant alone or the solid propellant alone. An applicant would not have to add the separation distances of both. This proposal rested on the conclusion that, generally, no credible scenario existed that could produce a simultaneous explosion reaction of both liquid propellant tanks and solid propellant motors. This requirement has changed because the assumption may not always be correct.

Under the final rule, an applicant must conduct an analysis of the maximum credible event (MCE), or the worst case explosion that is expected to occur. If analysis shows that an explosion caused by the liquid propellants will not cause a simultaneous explosion of the solid propellants, and an explosion due to the solid propellants will not cause a simultaneous explosion of the liquid propellants, the distance between the explosive hazard facility and all other explosive hazard facilities and public areas should be based on the MCE.

Discussion of Comments

The 45th Space Wing Range, Safety Engineering Support division (45SW/SESE), provided a number of comments on the FAA's proposed explosive safety requirements. First, the 45SW/SESE suggests including alternative approaches to Q–D standards such as risk-based thresholds and limits. *45th Space Wing Range, Safety Engineering Support division* at 1. The FAA agrees that alternative approaches to Q–D may be appropriate. However, the FAA will not formally adopt such an approach at this time for the following reasons.

On December 9, 1999, the DDESB approved, for limited use at DOD facilities, the use of risk-based explosives safety siting of explosives facilities for calendar years 2000 through 2002. Specifically, on a case-by-case basis, a risk-based explosives safety analysis that supports an explosives facility siting may be submitted to the DDESB Secretariat for review and approval.[5] A risk based analysis is used when a waiver or exemption would be required to approve a facility. The FAA will monitor the experience of the DDESB during those three years, and may take regulatory action at that time.

In the meantime, an applicant unable to meet the Q–D requirements might attempt a risk-based approach if able to provide a clear and convincing demonstration that the proposed method provides an equivalent level of safety to that required by Q–D. Such a demonstration would have to include an explosives safety analysis that analyzes hazards associated with handling explosive materials on the launch site. The applicant should examine the relationship between an explosive hazard facility and an exposed facility to determine what effect one has on the other in the event of an accidental explosion. As discussed in the NPRM, net explosives weight is used to calculate Q–D separations by means of the formula: $D=KW^{1/3}$, where D is the required distance (in feet), K is the protection factor depending on the degree of risk assumed or permitted, and $W^{1/3}$ is the cube root of the net explosives weight (NEW) in pounds. This formula is also used for assessing risk. Dividing the distance by the cube root of the NEW will give the actual K factor of protection. A K factor equates to an overpressure, as shown in table 1. Knowing the expected overpressure can help in understanding the facility or equipment damage and the personnel injuries expected to be sustained by a particular blast overpressure. Hazardous fragments must also be considered when preparing a risk assessment.

For more information on blast pressure, blast effects, and fragment hazards, see Air Force Manual

[5] Memorandum from USAF Colonel Daniel T. Tompkins to the Army, Navy, Air Force, and Marine Corps board members (Dec. 9, 1999).

(AFMAN) 91–201, Explosives Safety Standards, sections 4.48 and 4.49 (Mar. 7, 2000).

TABLE 1.—K-FACTOR TO PSI RELATIONSHIP [6]

K-factor	PSI	K-factor	PSI
1.0	1000	20	3.0
1.2	763	21	2.8
1.4	597	22	2.6
1.6	475	23	2.4
1.8	384	24	2.3
2.0	315	25	2.2
2.5	200	26	2.1
3.0	135	27	2.0
3.5	95	28	1.9
4.0	70	29	1.8
4.5	53	30	1.7
5.0	42	31	1.63
6.0	28	32	1.56
7.0	20	33	1.5
8.0	15	34	1.4
9.0	12	35	1.4
10	9.6	36	1.3
11	8.0	37	1.3
12	6.8	38	1.25
13	5.9	39	1.2
14	5.2	40	1.2
15	4.7	45	1.0
16	4.2	50	0.9
17	3.8	60	0.7
18	3.5	70	0.6
19	3.2	80	0.5

45SW/SESE asks whether there is an assumption that all DOD explosive site plan approval is current for launch sites on a federal range? What if formal DDESB approval is not on record? *45SW/SESE* at 1. The FAA does assume that all DOD explosive site plan approval is current for launch sites on a federal range and that formal DDESB approval is on record. The FAA's launch site safety assessments of the national launch ranges show that the DOD ranges enforce their standards. However, if the FAA discovers through its safety inspection program that a licensee is operating out of compliance with the DDESB approved explosive site plan, it will consider this a violation of the license and may take appropriate enforcement action.

With respect to the FAA's statement that a launch site operator is responsible for preventing unauthorized public access to the site, the 45SW/SESE commented that this should include surrounding areas designated as posing an environmental or explosives hazard. *45SW/SESE* at 2. The FAA agrees in principle. With respect to environmental hazards, surrounding areas posing an environmental hazard will be addressed in the environmental review process.

With respect to explosives, to comply with these rules adopted today, areas posing an explosive hazard during ground activities must, by regulatory requirement, be contained within the launch site. A launch site operator is responsible for preventing unauthorized access to the site. It is also responsible for ensuring that hazardous areas within the site are clear and that other users of the site are not placed at risk during hazardous operations. In the NPRM, the FAA stated that minimum prescribed separation distances are necessary to protect the public from explosive hazards on a launch site so that the effects of an explosion do not reach the public. 45SW/SESE notes that some other reasons for separation distances include to prevent unnecessary injuries or casualty to workers related to the explosive operation; to protect property; to avoid propagation from one explosive location to another; and remote explosives testing. *45SW/SESE* at 2. The FAA agrees, but wishes to stress that these requirements are intended to protect public safety because public safety is the FAA's mandate. Property belonging to members of the public also achieves some measure of protection in accordance with these requirements. Also, propagation from one explosive location to another is covered through part 420's intraline distance requirements.

In the NPRM, the FAA states that it must approve the explosive site plan that an applicant provides to the FAA. The 45SW/SESE asks whether explosive site plans already approved by the DDESB will be granted FAA approval. *45SW/SESE* at 3. The answer is yes. A new requirement from the NPRM is that the FAA now requires applicants for launch sites located on a federal launch range to provide the FAA with a copy of an explosive site plan. However, the FAA will not approve it. The FAA will use the explosive site plan for compliance monitoring purposes only.

The 45SW/SESE notes that ''launch site'' in some contexts implies ''launch complex,'' which excludes other launch processing facilities or areas at the launch range. *45SW/SESE* at 3. The FAA does not wish to imply that a launch site is merely a launch complex on a launch site. To clarify, a launch site includes the entire land area operated by a launch site operator, including all launch complexes and facilities within.[7]

In the NPRM, the FAA stated that the proposed requirements do not account for the use of barricades and other protective measures to mitigate the effect of an explosion on exposed areas.

[6] Table 4.2 in AFMAN 91–201 (Mar. 7, 2000).

[7] The Act and the regulations define launch site as the location on Earth from which a launch takes place (as defined in a license the Secretary issues or transfers under this chapter) and necessary facilities. 49 USC 70102(6); 14 CFR 401.5.

An applicant proposing to use such measures in order to deviate from the proposed siting rules may, during the application process, provide a clear and convincing demonstration that its proposed method provides an equivalent level of safety to that required by Q–D. 45SW/SESE states that this use of a waiver is inconsistent with the way the Air Force uses them. A waiver is used to document a condition or requirement that is not achieved, not one where the condition or requirement is being met. *45SW/SESE* at 4. The FAA did not mean ''waiver'' in the way the Air Force uses it. If a launch site operator plans to use barricades or other protective measures to mitigate the effect of an explosion on exposed area, the applicant would have to submit a clear and convincing demonstration of an equivalent level of safety.

In the NPRM, the FAA stated that proposed subpart B would establish criteria and procedures for the siting of facilities at a launch site where solid and liquid propellants are located to prepare launch vehicles and payloads for flight. 45SW/SESE notes that propellants are not enough. The requirements should include other explosives as well including linear shaped charges, safe and arm devices, initiators, and igniters. *45SW/SESE* at 2, 4. The FAA agrees, and has modified the explosive siting requirements to include those explosives, which are division 1.1 explosives.

In the NPRM, the FAA stated that division 1.1 explosives would not likely be present in sufficient quantities to affect the application of Q–D criteria. 45SW/SESE points out that this is incorrect, and the FAA agrees. The linear shaped charge, which is an explosive division 1.1 explosive, is the driver of distance requirements because in most cases a solid rocket booster is zero percent trinitrotoluene (TNT) equivalency. *45SW/SESE* at 5. ACTA adds that DOD 6055.9 states that the inhabited building distance for division 1.1 solid propellants ranging from 1–35,000 lb is 1250 ft. Proposed table E–1 only requires 800 ft. for quantities up to 1,000,000 lb. This is true even when quantities of 1.1 explosives are present. *ACTA* at 5. The FAA agrees that its assumption that division 1.1 explosives would not likely be present in sufficient quantities to affect the application of Q–D criteria was incorrect. The FAA has added division 1.1 explosives to this final rule.

In the NPRM, the FAA also stated that because division 1.3 solid propellants are all compatible, the proposed regulations do not incorporate compatibility groups for solid propellants. 45SW/SESE asks how compatibility would be determined if there was a need to store other explosives with the solids? *45SW/SESE* at 5. Ensuring that explosives in an explosives hazard facility are compatible is a procedural requirement of a launch operator. Ground safety will be covered in a separate proposed rulemaking on licensing and safety requirements for launch.

In the NPRM, the FAA proposed a special requirement at launch pads for launch vehicles that use liquid bi-propellant and solid propellant components. The required separation distance would be the greater of the distance determined by the explosive equivalent of the liquid propellant alone or the solid propellant alone. An applicant did not have to add the separation distances of both. The NPRM assumed that generally, no credible scenario existed that could produce a simultaneous explosion reaction of both liquid propellant tanks and solid propellant motors. 45SW/SESE states that the general assumption that a simultaneous explosion reaction of both liquid propellant tanks and solid propellant motors is unlikely is not a prudent approach. 45SW/SESE recommends analyses be performed on a case-by-case basis to determine a credible scenario. A number of current Q–D site plans considered TNT equivalencies from both the solids and liquids. *45SW/SESE* at 5, 6; *but see Lockheed Martin* at 3 (agreeing with the NPRM proposal as permitting greater flexibility in operations and launch vehicle design).

The FAA agrees with 45SW/SESE, and adopts the suggestion to require that an applicant address an explosion of both solid and liquid propellants at the same time. Air Force standard AFMAN 91–201, section 3.8 states that the combined bulk explosive weight of explosive items is not necessarily the weight used for Q–D calculations. Q–D is based on the maximum credible event (MCE), namely, the worst case explosion, that is expected to occur. Section 3.8.3 further states the basic rule when combining mass-detonating (e.g., the explosive equivalent of liquid propellants) and nonmass-detonating explosives (e.g., an explosive division 1.3 solid rocket motor). Consider the distance for the combined explosives weight of 1.1 and 1.3 first as 1.1. Then consider the distance for the combined explosives weight of 1.1 and 1.3 as 1.3. The required distance is the greater of the two. However, section 3.8 further states that exceptions are granted when analyses or test results demonstrate that the explosive division 1.1 (for liquid propellants) will not cause detonation of the explosive division 1.3 explosives.

This approach has now been incorporated into the final rule, in section 420.69. Note that the FAA still considers a simultaneous explosion reaction of both liquid propellant tanks and solid propellant motors to be unlikely. The FAA requires that this improbability be demonstrated. Otherwise, a launch site operator will have to use the combined explosive weight of the solids and liquids to determine required distances.

In the NPRM, the FAA proposed to adopt a provision of DOD STD 6055.9 that exempts the need for a lightning protection system when a local lightning warning system is used to terminate operations before the incidence of an electrical storm, if all personnel can and will be provided with protection equivalent to a public traffic route distance. The 45SW/SESE notes that this exception is not prudent in Florida where lightning strikes can occur without warning, except possibly an unmanned small licensed location where the value of the facility and its content are assumable risks. *45SW/SESE* at 6.

The FAA agrees that if lightning strikes can occur without warning, then it would be prudent to have a lightning protection system. The final rule would require a lightning protection system in that situation. A licensee must ensure the withdrawal of the public to a public area distance prior to an electrical storm. If this is not possible, then a lightning protection system is required. Note also that the objective is not to protect the licensee's property or that of its contractors, subcontractors, or customers, but members of the public and their property.

In the NPRM, the FAA defined intraline distance as the minimum distance permitted between any two explosive hazard facilities in the ownership, possession or control of one launch site customer. The FAA notes that unlike distances to protect the public, intraline distance will not protect workers with the same level or protection as the public. If intraline distances are not maintained between two explosive hazard facilities, then the larger area encompassing both quantities must be used for Q–D purposes when determining prescribed distances to the public. The 45SW/SESE questions how that could be acceptable when worker safety is diminished, and personnel protection must be established to be consistent with OSHA. *45SW/SESE* at 7. Worker safety comes under the jurisdiction of OSHA, and, as noted in the NPRM, the FAA does not

plan to duplicate the requirements of other regulatory agencies.

45SW/SESE also notes that inhabited building distance, which the FAA proposed as public area distance, has an assumed 20% facility damage and some injury. 45SW/SESE states that this may be a reasonable risk on a DOD installation, and asks whether 20% facility damage and injury is acceptable to the general public? *45SW/SESE* at 8; *see also* ACTA at 3 (noting that the Q–D criterion for public buildings allows a glass fragment serious injury probability of up to 30%). This would not be acceptable if Q–D requirements were the only measures taken to protect the public. The protection offered by Q–D along with the procedural requirements covered in a proposed rulemaking governing licensing and safety requirements for launch will be adequate to protect the public to an acceptable level. These other safety controls are the responsibility of a launch operator and will be covered in a separate proposed rulemaking on licensing and safety requirements for launch.

ACTA staff notes that the FAA uses DOD and NASA standards as the basis for explosive safety requirements. ACTA asked that since OSHA, EPA, and ATF have the responsibility for safety during production and assembly of hazardous materials, why shouldn't this apply to launch site operations as well. *ACTA* at 8.

OSHA and EPA regulations do apply on launch sites, but neither agency has Q–D requirements. ATF does have Q–D requirements, but, as noted in the NPRM, they only cover the storage of explosives at a launch site. ATF regulations do not cover the handling of explosives, which includes the majority of hazardous activities at launch sites. DOD and NASA standards are currently used at every major launch site in the United States, and the FAA requirements reflect the current practice. Note also that the distances used in this final rule for the ''use'' of explosives are consistent with ATF regulations on the ''storage'' of explosives, and that the FAA is not duplicating the ATF storage requirements. An ACTA staff member stated that the NPRM provides excruciating details on how to handle explosives but does not consider public risks associated with either toxicity or blast overpressure focussing. These are major factors in siting decisions. *ACTA at 7.* The FAA agrees that these are important issues, but are not critical for the layout of a launch site. These issues are covered in the proposed rulemaking governing licensing and safety requirements for launch.

Space Access, LLC, (Space Access) also commented on the explosive siting requirements. In the NPRM, the FAA stated that the DDESB is likely to specify new hazard and compatibility groups, distance values, and equivalency values, and the public may anticipate their eventual consideration and possible adoption by the FAA. Space Access recommends the FAA accelerate this work and provide these values as soon as possible. These proposed changes could have a major financial impact to both the site operators and launch vehicle operators in terms of launch acquisition, usage, safety separation distances for storage and public access and procedures for use in all phases of operations leading up to the launch. Space Access was concerned that launch operators will never achieve aircraft-like operations if they are continually evacuating sites and areas to meet outdated policies and suggested that no flexibility to meet safety criteria by means other than total separation distance. *Space Access* at 2. The FAA would like to stress that the work is being conducted by the DDESB, and is not in the control of the FAA. It is, however, near completion and the FAA will consider it once it is completed and adopted by the DDESB.

Space Access also states that there seems to be a lack of discussion of the distances required by the Department of Transportation (DOT). Space Access wants a single standard for propellants. DOT uses numbers in tens of feet for public safety distances. Other standards also exist in the National Fire Protection Agency (NFPA) publications and in local fire codes. *Space Access* at 2, 3. The FAA agrees that other liquid Q–D standards are much different than those proposed by the FAA, but the FAA selected standards representing current procedures for the launch industry. That is why the new liquid Q–D standards that the DDESB will likely adopt are important since they are based on a review of all relevant government and industry standards in this area, including those of DOT. There will not likely be a single standard for propellants, as Space Access would like, but the standards applicable to launch sites will be more consistent with other commercial and government standards.

Space Access also notes that in addition to having realistic numbers for Q–D, there needs to be procedures and policies such that incentives are in place for actually designing and operating in a safe manner. For example, earthen berms can be used to reduce separation distances. This should be the same with adequate design and procedures. According to Space Access, there is no motivation for improving the design or procedures because all that matters is total quantity or TNT equivalency. Space Access strongly recommends the FAA adopt a methodology that trades design and procedures for distance. *Space Access* at 3.

The FAA agrees that separation distances can be reduced if certain features are built into a facility. The FAA has chosen not to include design standards in the final rule at this time because of their complexity. In recognition of the availability of such substitutes, the final rule now provides that for explosive siting issues not otherwise addressed by the requirements of §§ 420.65–420.69, a launch site operator must clearly and convincingly demonstrate a level of safety equivalent to that otherwise required by part 420. This means that the FAA may permit design features that provide an equivalent level of safety to substitute for separation distances.

Lockheed Martin Corporation also commented on the Q–D requirements. First, it believes the FAA should consider applying DOD Standard 6055.9 at non-federal launch sites instead of developing a new standard because 6055.9 represents a well-developed and mature regime with an impressive safety record; and because implementation of 6055.9 at non-federal launch sites would help ensure consistent regulation of explosives both at federal and non-federal launch ranges. *Lockheed Martin* at 3. The FAA agrees that 6055.9 represents a well-developed and mature regime with an impressive safety record. That is why the FAA's Q–D standards are modeled after this standard. The FAA believes, however, that codifying, instead of adopting by reference, the basic requirements of the standard in a regulation are beneficial for a number of reasons. First, codification permits the standard to be tailored to the needs of commercial launch sites. DOD standard 6055.9 is applicable to all military bases, worldwide. Second, the language within standards such as DOD regulation 6055.9 is not always stated in a regulatory manner. Often, discretion based on military need by the DDESB or other body is embedded in the standard. Third, changes to that standard by the DDESB could not automatically apply to applicants for a license. By adopting the basic requirements of that standard in the final rule, the FAA can monitor changes in the DDESB standard, consider the applicability and appropriateness of changes to commercial launch sites, and go through

notice and comment rulemaking to adopt any change. Therefore, the FAA retains the approach of adopting pertinent requirements of that standard in the final rule rather than referencing the entire DOD standard 6055.9.

Lockheed Martin agrees with the FAA's approach to addressing hardening on a case-by-case basis, and suggests referring to National Fire Protection Association (NFPA) 70 and 496. *Lockheed Martin* at 3. NFPA 70, the National Electrical Code® (1999), includes safety requirements for all types of electrical installations. It is useful for work that involves electrical design, installation, identification, or inspection. NFPA 496, Standard for Purged and Pressurized Enclosure for Electrical Equipment, 1988, specifies requirements for design and operation of purged and pressurized electrical equipment enclosures to reduce or eliminate the hazardous location classification within the enclosures.

Those two standards are incorporated by reference in OSHA's Occupational Safety and Health Regulations at 29 CFR 1910.6. Because OSHA requires them, and because the FAA is seeking to avoid duplicating the requirements of other civilian regulatory agencies, the standards will not be incorporated into this final rule. In any event, the FAA will be willing to consider those standards in the event a launch site operator attempts to use them to demonstrate an equivalent level of safety.

E. Explosive Mishap Prevention Measures.

Application of the quantity-distance rules alone will not prevent mishaps from occurring on a launch site. The Q–D rules merely reduce the risk to the public to an acceptable level if a mishap occurs, and if the public is kept away from the mishap by a distance that is at least as great as the public area distance. Safe facility design and prudent procedural measures are critical to preventing a mishap from occurring in the first place. Because the public at a launch site cannot be protected by prudent site planning alone, the FAA today adopts launch site operator responsibilities to prevent mishaps involving propellants and other explosives.

Part 420 focuses on measures that are appropriate to be taken by a launch site operator. For the most part, the FAA considers it prudent to place the responsibility on a launch site operator for those measures that must be built into facilities. Requirements of a more operational nature will be covered in another FAA rulemaking.

Part 420 focuses on appropriate measures. These are particularly important for electro-explosive devices. Electric hazards include lightning, static electricity, electric supply systems, and electromagnetic radiation. The FAA is adopting launch site operator requirements for two of these electric hazards: lightning and electric supply systems. A full discussion of these can be found in the Launch Site NPRM. 64 FR at 34324–34325.

Other measures were considered but rejected because the FAA's proposed rulemaking on licensing and safety requirements for launch will cover other procedural measures to guard against inadvertent initiation of propellants from electricity. Moreover, launch and launch site operators should implement prudent design and construction measures to comply with local, state, and other federal law, such as OSHA requirements.

Discussion of Comments

In the NPRM, the FAA noted that the National Fire Protection Association (NFPA), Batterymarch Park, Quincy, Massachusetts, has published NFPA 780, Standard for the Installation of Lightning Protection Systems. The latest edition was published in 1997. NFPA 780 provides for the protection of people, buildings, special occupancies, heavy duty stacks, structures containing flammable liquids and gases, and other entities against lightning damage. The FAA asked for the public's views on the use and applicability of this code.

A number of commenters supported the FAA's adoption of NFPA 780. 45SW/SESE noted that the Air Force uses NFPA 780 as a core document to design lightning protection systems. *45SW/SESE* at 6. The NFPA stated that the FAA should adopt NFPA 780, which dates back to Benjamin Franklin's era. *NFPA* at 1, 2; *see also Lockheed Martin* at 3. The FAA agrees with the commentors regarding the importance of NFPA 780. However, the FAA will not incorporate NFPA 780 by reference because it does not always include mandatory language. Due to its importance and utility, the FAA will undoubtedly refer to it for appropriate guidance.

Although LMC believes NFPA 780 is an appropriate and useful standard for a lightning protection system, it states that a launch site operator should not be required to install and maintain an independent lightning protection system. A launch operator will likely have one as a way to attract customers. *Lockheed Martin* at 3. The FAA disagrees. The FAA has learned from experience that while most launch site operators might be expected to adhere to commonly held standards; this is not always the case. Without such requirements, an adequate level of safety or risk mitigation cannot be achieved. If most would do this anyway, then the impact is minimal. In any event, because it involves the construction of facilities, the FAA has made the installation of a lightning protection system a requirement for a launch site operator license to ensure its availability.

In addition to NFPA 780, the 45SW/SESE suggested that the FAA review DOD 6055.9, and applicable Air Force instructions to provide full regulatory requirements. The FAA has reviewed DOD 6055.9, Air Force Manual 91–201, and the National Aeronautics and Space Administration's (NASA) ''Safety Standard for Explosives, Propellants, and Pyrotechnics,'' NSS 1740.12 (Aug.1993). The FAA believes that the requirements in the final rule cover the basic safety issues that need to be addressed for lightning protection systems. The FAA expects applicants to achieve the level of safety represented by the DOD and NASA standard.

Another explosive mishap prevention measure is the control of static electricity. The FAA did not propose any requirements in the NPRM regarding the control of static electricity because the FAA believed that the control of static electricity in launch operations is primarily procedural in nature, and is best covered by the FAA in another proposed rulemaking governing licensing and safety requirements for launch. The FAA asked for the public's view.

LMC agreed with the FAA and noted that new rules on control of static electricity should reflect current procedures used by the launch operators. *Lockheed Martin* at 4. The NFPA recommended NFPA 77, Recommended Practice on Static Electricity (1993), as a reference document. NFPA 77 provides a basic understanding of the phenomena of static electric discharges and how they can serve as ignition sources, and includes useful information on bonding and grounding.

F. Launch Site Location Review

The FAA intends a launch site location review to determine whether the location of a proposed launch site could support launches that would not jeopardize public health and safety, and the safety of property. To that end, the FAA will determine whether at least one hypothetical launch could take place safely from a launch point at the proposed site. The FAA will not license

the operation of a launch site from which a launch could never safely take place. An applicant should, however, bear in mind that an FAA license to operate a launch site does not guarantee that a launch license would be issued for any particular launch proposed from that site. Accordingly, much of the decision making with respect to whether a particular site will be economically successful will rest, as it should, with a launch site operator, who will have to determine whether the site possesses sufficient flight corridors for economic viability.

Accordingly, prior to issuing a license to operate a launch site at the proposed location, the FAA will ascertain whether it is hypothetically possible to launch at least one type of launch vehicle on at least one trajectory from each launch point at the proposed site while meeting the FAA's collective risk criteria. The FAA wants to ensure that there exists at least one flight corridor or set of impact dispersion areas from a proposed launch site that would contain debris away from population. Launch is a dangerous activity that the FAA will allow to occur only when the risk to people is below an expected casualty (E_c) of 30×10^{-6}. In other words, if there are too many people around a launch site or in a flight corridor the FAA will not license the site.

All this is not to say that the FAA is requiring an applicant for a license to operate a launch site to perform a complete flight safety analysis for a particular launch. The FAA recognizes that an applicant may or may not have customers or a particular launch vehicle in mind. Accordingly, the FAA's launch site location review methods only approximate, on the basis of certain assumptions and recognizing that not all factors need to be taken into account, a full flight safety analysis that would normally be performed for an actual launch. Of course, if an applicant does have a customer who satisfies the FAA's flight safety criteria for launch and obtains a license for launch from the site, that showing would also demonstrate to the FAA that a launch may occur safely from the proposed site, and the FAA could issue a license to operate the launch site on the basis of the actual launch proposed.

The launch site location review applies to both expendable launch vehicles (ELVs) and reusable launch vehicles (RLVs). Detailed methodologies for the launch site location review are only provided for expendable launch vehicles with a flight history. The reusable launch vehicles currently proposed by industry vary quite a bit. Accordingly, the FAA considered it unwise to define a detailed analytical method for determining the suitability of a launch site location for RLVs. An applicant proposing a launch site limited to the launch of reusable launch vehicles would still need to define a flight corridor and conduct a risk analysis if population were present within the flight corridor, but the FAA will review such an analysis on a case-by-case basis, consistent with the principles discussed in this rulemaking.

Similarly, the FAA has chosen not to define a detailed analytical method for determining the suitability of a launch site location for unproven launch vehicles. An applicant proposing a launch site limited to the launch of unproven launch vehicles would have to demonstrate to the FAA that the launch site is safe for the activity planned.

A launch site location review provides an applicant with alternative methods for demonstrating that a proposed launch site satisfies FAA safety requirements. Specifically, the applicant must demonstrate that a flight corridor or set of impact dispersion areas exist that do not encompass populated areas or that do not give rise to an E_c risk of greater than 30×10^{-6}. Each proposed launch point must be evaluated for each type of launch vehicle, whether expendable orbital, guided sub-orbital or unguided sub-orbital, or reusable, that an applicant proposes would be launched from each point.

Each of the three methods for evaluating the acceptability of a launch site's location require an applicant to identify an area, whether a flight corridor or a set of impact dispersion areas, emanating from a proposed launch site. That area identifies the public that the applicant must analyze for risk of impact and harm. An applicant who anticipates customers who use guided orbital launch vehicles must define a flight corridor for a class of vehicles launched from a specific point along a specified trajectory, that extends 5,000 nautical miles from the launch point or until the launch vehicle's instantaneous impact point leaves the Earth's surface, whichever is shorter. For guided sub-orbital launch vehicles, the flight corridor ends at an impact dispersion area of a final stage. An applicant must demonstrate either that there are no populated areas within the flight corridor or that the risk to any population in the corridor does not exceed the FAA's risk criteria. Similarly, for the sub-orbital launch of an unguided vehicle, an applicant must analyze the risks associated with a series of impact dispersion areas around the impact points for spent stages. If there are people in the dispersion areas, the applicant must demonstrate that the expected casualties from stage impacts do not exceed the FAA's risk criteria.

E_c, or casualty expectancy, represents the FAA's measure of the collective risk to a population exposed to the launch of a launch vehicle. The measure represents the expected average number of casualties for a specific launch mission. In other words, if there were thousands of the same mission conducted and all the casualties were added up and the sum divided by the number of missions, the answer and the mission's expected casualty should statistically be the same. This E_c value defines the acceptable collective risk associated with a hypothetical launch from a launch point at a launch site, and, as prescribed by the regulations, shall not exceed an expected average number of casualties of 0.00003 (30×10^{-6}) for each launch point at an applicant's proposed launch site. This E_c value defines acceptable collective risk.

The FAA's methods for identifying a flight corridor or impact dispersion areas distinguish between guided orbital expendable launch vehicles with a flight termination system (FTS), guided sub-orbital expendable launch vehicles with an FTS, and unguided sub-orbital expendable launch vehicles without an FTS.[8] For purposes of part 420, references to a guided expendable launch vehicle, whether orbital or sub-orbital, may be taken to mean that the vehicle has an FTS. References to an unguided sub-orbital may be understood to mean that the vehicle does not possess an FTS.

Part 420 divides guided orbital expendable launch vehicles into four classes, with each class defined by its payload weight capability, as shown in table 2. Sub-orbital expendable launch vehicles are not divided into classes by payload weight, but are categorized as either guided or unguided. Table 3 shows the payload weight and corresponding classes of existing orbital expendable launch vehicles. For a launch site intended for the use of orbital launch vehicles, an applicant

[8] Part 420 does not include a means for analyzing risks posed by a launch site for the launch of unguided suborbital launch vehicles that employ FTS. Historically, few of these vehicles have been launched. In the event an applicant for a license to operate a launch site wishes to operate a launch site only for such vehicles, the FAA will handle the request on a case by case basis. The FAA does note, however, that unguided suborbital launch vehicles that in the past have been launched with an FTS were usually launched with the FTS because the launch was otherwise too close to populated areas for the type of vehicle and trajectory flown.

defines a hypothetical flight corridor from a launch point at the proposed launch site for the largest launch vehicle class anticipated'' which the FAA anticipates will be based on expected customers.

TABLE 2.—ORBITAL EXPENDABLE LAUNCH VEHICLE CLASSES BY PAYLOAD WEIGHT (LBS)

100 nm orbit	Weight class			
	Small	Medium	Medium large	Large
28 degrees inclination*	≤4400	>4400 to ≤11100	>11100 to ≤18500	>18500
90 degrees inclination	≤3300	>3300 to ≤8400	>8400 to ≤15000	>15000

*28 degrees inclination orbit from a launch point at 28 degrees latitude.

TABLE 3.—CLASSIFICATION OF COMMON GUIDED ORBITAL EXPENDABLE LAUNCH VEHICLES

Vehicle	Payload weight (lbs)	Payload weight (lbs)	Class
	100 nm Orbit 28° inc.	100 nm Orbit 90° inc.	
Conestoga 1229	600	450	Small.
Conestoga 1620	2,250	1,750	Small.
Athena-1	1,755	1,140	Small.
Athena-2	4,390	3,290	Small.
Pegasus	700	N/A	Small.
Pegasus XL	1,015	769	Small.
Scout	560	460	Small.
Taurus	3,100	2,340	Small.
Atlas II	14,500	12,150	Medium/Large.
Atlas IIA	16,050	13,600	Medium/Large.
Atlas IIAS	19,050	16,100	Large.
Atlas IIIA	19,050	15,700	Large.
Atlas IIIB	23,630	20,240	Large.
Atlas V 404	27,550	23,700	Large.
Atlas V 552	44,200	37,400	Large.
Delta 6920	8,780	6,490	Medium.
Delta 7920	11,330	8,590	Medium/Large.
Delta 3	18,280	14,920	Medium/Large.
Delta 4 M	18,600	15,150	Large.
Delta 4 M (5,4)	30,000	23,000	Large.
Delta 4 Heavy	56,900	46,000	Large.
Titan II	N/A	4,200	Medium.
Titan III	31,200	N/A	Large.
Titan IV	47,400	41,000	Large.

Methods for estimating the risk posed by the operation of a launch site for guided orbital and sub-orbital expendable launch vehicles are presented in appendices A, B and C. Appendix A contains instructions for creating a flight corridor for guided orbital and sub-orbital expendable launch vehicles. Appendix B provides an alternative method to appendix A. Appendix B also instructs an applicant how to create a flight corridor for guided expendable launch vehicles, but provides more detailed calculations to employ so that, although an appendix B flight corridor is typically less conservative than that of appendix A, it should prove more representative of actual vehicle behavior. Appendix C contains the FAA's method for applicants to analyze the risk posed by guided expendable launch vehicles within a flight corridor created in accordance with appendix A or B. Unguided sub-orbital expendable launch vehicles are presented in appendix D, which describes how an applicant should estimate impact dispersion areas and analyze the risk in those areas.

Appendix A is less complex, but generates a larger flight corridor than the methodology of appendix B. No local meteorological or vehicle trajectory data are required to estimate a flight corridor under appendix A. Because appendix A provides a more simple methodology, an applicant may want to use it as a screening tool. If an applicant can define a flight corridor for a single trajectory, using appendix A, that does not overfly populated areas, the applicant may satisfy the launch site location review requirements with the least effort. If, however, the corridor includes populated areas, the applicant may create an appendix B flight corridor that may be more narrow, or may conduct a casualty expectancy analysis. An applicant is not required to try appendix A before employing appendix B.

The FAA's location review reflects a number of assumptions designed to keep the review general rather than oriented toward or addressing a particular launch. These assumptions are discussed more fully below, but may be summarized briefly. The location reviews for appendices A and B flight corridors reflect an attempt to ensure that launch failure debris would be contained within a safe area. Successful containment must assume a perfectly functioning flight termination system. A perfectly functioning flight termination system would ensure that any debris created by a launch failure would be contained within a flight corridor. When the high risk event is not launch failure but launch success, as tends to be the case with an unguided sub-orbital expendable launch vehicle that does not employ an FTS, the FAA still proposes

a location review based on an assumption of containment.

The approaches provided in the four location review appendices are based on some common assumptions that reflect limitations of the launch site location review analysis. The FAA is not requiring an applicant to analyze the risks posed to the public by toxic materials that might be handled at the proposed site, nor the risk to ships or aircraft from launch debris or planned jettisoning of stages. The FAA recognizes that these assumptions represent a limitation in the launch site location review. The FAA intends that these three risks will be dealt with through pre-flight operational controls and flight commit criteria which are partially addressed through part 420 coordination requirements and which also will be identified as part of a launch license review. All launches that take place from a U.S. launch site whose operation is licensed will either be regulated by the FAA through a launch license or will be U.S. government launches that the government carries out for the government.

The two methods for creating guided expendable launch vehicle flight corridors are intended to account for expendable launch vehicle failure rate, malfunction turn capability, and the expendable launch vehicle guidance accuracy as defined by the impact dispersions of these vehicles. The premise undergirding each of these methods is that debris would be contained within the defined flight corridor or impact dispersion areas. Accordingly, for purposes of a launch site location review, only the populations within the defined areas need to be analyzed for risk. The FAA recognizes that were a flight termination system to fail to destroy a vehicle as intended, a launch vehicle could stray outside its planned flight corridor. That concern will be better accommodated through another forum, namely, the licensing of a launch operator and the review of that launch operator's flight safety system. Because a containment analysis only looks at how far debris would travel in the event an errant vehicle were destroyed, the containment analysis has to assume a perfectly functioning flight termination system. In other words, for purposes of analyzing the acceptability of a launch site's location for launching guided expendable launch vehicles, the FAA will assume that a malfunctioning vehicle will be destroyed and debris will always impact within acceptable boundaries. Accordingly, the FAA does not propose to explore, for purposes of determining the acceptability of a launch site's location, the possibility that a vehicle's flight termination system may fail and that the vehicle could continue to travel toward populated areas. Any proposed site may present such risks—indeed, any proposed launch presents such risks—but they are best addressed in the context of individual launch systems. This working assumption of a perfectly reliable flight termination system will not, of course, apply to the licensing of a launch of a launch vehicle. The FAA will consider the reliability of any particular launch vehicle's FTS in the course of a launch license review. From a practical standpoint, this means that for the launch site location review, both nominal and failure-produced debris would be contained within a flight corridor, obviating the need for risk analyses that address risk outside of a defined flight corridor or set of impact dispersion areas.

Additionally, the FAA does not propose to require an applicant to analyze separately the risks posed by the planned impact of normally jettisoned stages from a guided expendable launch vehicle, except for the final stage of a guided sub-orbital expendable launch vehicle. The FAA does not consider intermediate stage impact analysis necessary to assess the general suitability of a launch point for guided expendable launch vehicles because the impact location of stages is inherently launch vehicle-specific, and the trajectory and timing for a guided expendable launch vehicle can normally be designed so that the risks from nominally jettisoned stages will be kept to acceptable levels. A launch license review will have to ensure that vehicle stages are not going to impact in densely populated areas. Risk calculations performed for launches from federal launch ranges demonstrate a relatively low risk posed by controlled disposition of stages in comparison to the risk posed by wide-spread dispersion of debris due to vehicle failure.

Each of the FAA's approaches to defining flight corridors or impact dispersion areas is designed to analyze the highest risk launch event associated with a particular vehicle technology. This is not meant to imply that lower risk launch events are necessarily acceptable; only that they will not be considered in the course of this review. For a guided orbital expendable launch vehicle, that event is vehicle failure. For an unguided sub-orbital expendable launch vehicle, the launch event of highest risk is vehicle success, namely, the predicted impact of stages. For a guided expendable launch vehicle the overflight risk, which results from a vehicle failure followed by its destruction (assuming no FTS failure), is the dominant risk. Risks from nominally jettisoned debris are subsumed in the overflight risk assessment. For an unguided sub-orbital expendable launch vehicle, the FAA proposes that risk due to stage impact be analyzed instead of the overflight risk. This distinction is necessitated by the fact that the failure rate during thrust is historically significantly lower for unguided vehicles than for guided vehicles. Current unguided expendable launch vehicles with many years of use are highly reliable. They do not employ an FTS; therefore, debris pieces usually consist of vehicle components that are not broken up. Another reason for the difference between analyses is that unguided vehicle stage impact dispersions are significantly larger than guided vehicle impact dispersions. These differences add up to greater risk within an unguided expendable launch vehicle stage impact dispersion area than the areas outside the dispersion areas. Therefore, a risk assessment is only performed on those populations within an unguided expendable launch vehicle stage impact dispersion area.

An applicant must define an area called an overflight exclusion zone (OEZ) around each launch point, and the applicant must demonstrate that the OEZ can be clear of members of the public during a flight. An OEZ defines the area where the public risk criteria of 30×10^{-6} would be exceeded if one person were present in the open. The overflight exclusion zone was estimated from risk computations for each expendable launch vehicle type and class. An applicant must define an OEZ because expendable launch vehicle range rates are slow in the launch area, launch vehicle effective casualty areas, the area within which all casualties are assumed to occur through exposure to debris, are large, and impact dispersion areas are dense with debris so that the presence of one person inside this hazardous area is expected to produce E_c values exceeding the public risk criteria. Accordingly, an applicant must either own the property, demonstrate to the FAA that there are times when people are not present, or that it could clear the public from the overflight exclusion zone prior to flight. Evacuating an overflight exclusion zone for an inland site, might, for example, require an applicant to demonstrate that agreements have been reached with local communities to close any public roads during a launch.

The FAA has made a few changes to the Launch Site NPRM for this final rule. First, the launch site location

review regulatory text has been expanded to better map out the launch site location review for both ELVs and RLVs. The appendices remain essentially the same.

Second, the size of the flight corridors that are generated in either appendix A or B are now assumed in appendix C to reflect a three-sigma event. The NPRM had used five-sigma. To review, for purposes of the launch site location review, a flight corridor is an area on the Earth's surface estimated to contain debris of a ballistic coefficient of ≥3 pounds per square foot from nominal and non-nominal flight of a launch vehicle, assuming a perfectly functioning flight termination system. The land encompassed by the flight corridor includes the population most at risk due to a launch. The data used to develop a flight corridor does not directly provide statistical significance. However, the relative risk to any specific populated area can be assumed to vary proportionally with the populated area's distance from the nominal trajectory ground trace. The NPRM assumed the boundaries were five-sigma distances, which proved unwise because the statistical probability of an event occurring between three-sigma and five-sigma is extremely small. The launch site location review procedures are not precise enough for the FAA to claim that a flight corridor contains all of the population at risk at such a low probability level. Assuming that the distance to the flight corridor boundary is three-sigma is a more reasonable assumption.

Third, the multipliers in the launch site location review have been taken out. In the Launch Site NPRM, to add conservatism to the launch site location review, applicants would multiply the final E_c value obtained through either appendix C or appendix D by a multiplier of two and five, respectively. This final rule does not make use of multipliers because the FAA, upon reconsideration, now believes that the procedures for estimating risk in appendices A–D are conservative enough to not require a multiplier at the end of the process.

Lastly, the FAA clarified in the regulatory text that orbital expendable launch vehicles are classified by weight class, based on the weight of payload the launch vehicle can place in a 100-nm orbit, as defined in table 2.

Discussion of Comments

The FAA received comments on the launch site location review from ACTA, Inc; the New Mexico Office for Space Commercialization; Oklahoma Aeronautics and Space Commission; Space Access, LLC; Christopher Shove; and the Texas Aerospace Commission.

ACTA stated that medium to large vehicles launched from Cape Canaveral Air Station (CCAS) do not meet the risk criteria. *ACTA* at 1. The FAA disagrees. Using Appendix B, medium to large vehicles do pass the launch site location review.

ACTA stated that unlike under EWR 127–1, the FAA has decided not to permit any risk above 30×10^{-6}. This coupled with a very conservative approach to risk analysis could prove detrimental to the U.S. industry. *ACTA* at 1. The FAA disagrees. The expected casualty acceptable risk level, 30×10^{-6}, is not new. It is a current requirement for launches. Second, the very conservative approach proposed is conservative because simplifying assumptions were made. In many instances the FAA believes that such approaches adequately demonstrate the acceptability of the site location without the added burden of more complex analysis. It should not prove detrimental because applicants may do a more refined, less conservative analysis. To make this option explicit, sections 420.23 and 420.25, covering the flight corridor and risk analysis, respectively, explicitly state that the FAA will approve an alternate method if an applicant provides a clear and convincing demonstration that its proposed method provides an equivalent level of safety to that required in the appendices.

ACTA also states that the risk analysis methodology presented in the document is very simplistic. There are better methods available, albeit more complex, but the NPRM does not allow for any other methodology. ACTA recommended that an applicant be allowed to use equivalent approved analysis methods and processes that have been validated by use at federal ranges involved in ELV and RLV activities. *ACTA* at 2, 6 and 7. The FAA agrees and has modified the launch site location review to allow such methods without a waiver. The analysis methodology is intended to be simplistic and conservative. The actual risks will be less than that estimated by the methodologies provided. In many cases, the site applicant may not have available the inputs necessary to provide a detailed risk analysis. In addition, many launch sites are so remote that they do not need detailed analyses to show that the risk levels are acceptable. New under these final rules is that an applicant has the option of using higher fidelity methodologies.

ACTA states that the NPRM offers no insight into the source of numbers, such as casualty areas, that the FAA directs the license applicant to use. The references should be identified. *ACTA* at 1. Review of the Launch Site NPRM shows that the FAA provided its sources. The NPRM stated, for example, to address the issues raised, that the FAA derived the effective casualty areas in table C–3 from DAMP, a series of risk estimation computer programs used at federal launch ranges, to evaluate the vehicle classes described in table 1, section 420.21. 64 FR at 34353.

ACTA and ACTA staff raised concerns regarding issues not addressed in this rulemaking. ACTA stated that the NPRM did not address launch-related risk from potential toxic releases, from far-field window breakage, or debris risk to ships and aircraft. *ACTA* at 1, 2. ACTA staff added that ignoring the existence of established major air corridors or shipping lanes seems shortsighted. *ACTA* at 9. The FAA disagrees. Air corridors and shipping lanes are not ignored. A launch site operator must have an agreement in place with FAA Air Traffic and the Coast Guard covering those issues before it will get a license.

The FAA agrees that the issues of toxicity and windows breaking should not be ignored for launch safety, and launch -related risk from potential toxic releases, from far-field window breakage, or debris risk to ships and aircraft are covered in launch license application reviews. Toxic and blast risks were not covered in this rulemaking because launching only when circumstances such as wind are favorable can minimize such risks. The FAA considers these issues better addressed through the launch license. Second, debris risk to ships and aircraft are addressed in these regulations. An applicant must conclude agreements with the Coast Guard and the FAA Air Traffic in order to address ship and aircraft risk, and a separate rulemaking addresses these issues with additional specificity.

ACTA states that the level of analysis in the NPRM seems to assume that the applicant will be very naıve, and not have access to good tools or consultant support. *ACTA* at 2. The FAA disagrees. Not all applicants are flight safety specialists. The FAA believes that providing tools and data to conduct risk and other analyses is beneficial to the industry. The proposed appendices take an applicant step by step through the process.

ACTA states that the FAA's lack of methodology for risk analysis in the back azimuth direction other than the

exclusion zone implies that there is no back azimuth risk. *ACTA* at 2. The FAA does not wish to imply that there is no back azimuth risk. There is. However, as noted in the NPRM, the launch site location review assumes a perfectly functioning flight safety system. Therefore, population behind the launch site is only addressed if it is within the overflight exclusion zone or within the flight corridor due to wind effects. Otherwise back azimuth population is not reviewed. A launch license applicant will need to adequately address all flight risks in order to receive a license.

ACTA states that the instantaneous impact point (IIP) rates are unrealistically low, particularly late in flight. If only powered flight is considered, the average IIP rate will increase. Using a lower IIP rate inflates the computed risk. *ACTA* at 2. The FAA notes that the IIP range rate data was intended to be conservative but, as discussed in the NPRM, they are not unrealistically low. 64 FR at 34342.

ACTA states that the effective casualty areas seem very high. The casualty area numbers are a prime contributor to the unrealistically high risks computed by these methods. *ACTA* at 2. The FAA disagrees that the casualty area are unrealistically high if one considers, for each piece of debris, its size, the path angle of its trajectory, impact explosions, the size of a person, and debris skip, splatter, and bounce. They are also intended to be conservative. Higher fidelity analyses will be necessary for the launch license application. Also, now that the FAA will permit higher fidelity analyses that produce an equivalent level of safety, the FAA finds that the concern is addressed.

ACTA states that the overflight exclusion zone (OEZ) is designed to protect an individual in the public at a risk level of 30×10^{-6} casualties. ACTA further states that this seems rather loose, and that the Range Commanders Council Standard suggests 1×10^{-7} fatalities and the Eastern Range (ER) and Western Range (WR) have used 1×10^{-6} casualties as an individual risk limit for the general public. *ACTA* at 3. The FAA disagrees. ACTA misunderstood what was stated in the NPRM. The NPRM actually states that an overflight exclusion zone is the area where the collective risk to the public would be greater than 30×10^{-6} if one person were present in the open. 64 FR 34329. The overflight exclusion zone does not incorporate an individual risk standard per se, but is merely an area that must be clear of population for the collective risk standard to be met.

ACTA states that if 30×10^{-6} was used as the basis for developing the distance D_{max}, then D_{max} appears quite conservative for that risk level. *ACTA* at 3. The FAA did not use the criteria of 30×10^{-6} as the basis for developing the distance D_{max}. The basis for D_{max} is the estimated maximum distance from a launch point that debris travels given a worst-case launch vehicle failure and flight termination at 10 seconds into flight.

ACTA also opposed the FAA's use of a ballistic coefficient of three. The NPRM stated that although the FAA proposes to assume a ballistic coefficient of three as the smallest piece of wind sensitive debris hazardous to the public, ballistic coefficient is not directly related to fatality criteria based on the kinetic energy of debris. The ballistic coefficient of three is related to a kinetic energy of 58 ft/lbs, which represents a probability of fatality of 50 percent for a standing person. ACTA states that historically, the national ranges have used impact kinetic energy as a criterion for determining whether an inert fragment may or may not produce a casualty. ACTA has been performing biomechanical simulations, which are still in progress, to investigate these criteria in support of the Air Force federal launch ranges. However, one conclusion is that impact kinetic energy by itself is an inadequate predictor of whether or not an inert impacting fragment will produce a casualty. *ACTA* at 4, 5. The FAA notes that the method suggested is far too complex for the scope of this final rule. This final rule very simply assumes that a hit is a casualty. Note that the risk criterion is based on the generation of a casualty not a fatality.

NMOSC also disagreed with the FAA's statement that a ballistic coefficient of three is related to a kinetic energy of 58 ft/lbs, which represents a probability of fatality of 50 percent for a standing person. NMOSC states that 58 ft–lbs is a better number to use than 11, but asks what is the basis for the 50% lethality claim for 58 ft–lbs and ballistic coefficient of three. Furthermore, sheltering should also be considered. *NMOSC* at 3.

The basis for the 50% lethality claim is for a standing person and is found in the Range Commanders Council (RCC) Supplement to Standard 321–97, ''Common Risk Criteria for National Test Ranges, Inert Debris'', Figure 4–3, on page 4–5. However, the FAA would like to modify its statement made in the NPRM with respect to how ballistic coefficient relates to kinetic energy and the 50% lethality claim. Ballistic coefficient (β) is very difficult to relate to kinetic energy. (β) is equal to an object's weight divided by the product of the object's drag coefficient and it's projected area and expressed in units of lbs/ft^2. Kinetic energy units are joules or ft–lbs/sec. Various combinations of weight, drag coefficient, and projected area can equate to the same β, but each combination would produce a different kinetic energy.

ACTA makes a number of points about launch corridors. First, ACTA states that impulsive velocities imparted to fragments from explosives are ignored throughout. *ACTA* at 6. The FAA did consider whether it was appropriate to address explicitly impulsive velocities but decided that the conservatism incorporated into appendix B obviates the need for including them in the appendix B analysis. Additionally, these analyses are not intended to be high fidelity analyses or require inputs that a launch site applicant may not have. These analyses are believed to be adequate for most coastal site applicants. More detailed analysis will be required from launch operators.

Second, ACTA states that no justification is given for the use of five-sigma for the launch corridor boundaries. *ACTA* at 6. The FAA does agree that the use of five-sigma to define the flight corridor boundary was not appropriate. As noted above, the final rule assumes the boundaries are three-sigma.

Third, ACTA states that there does not appear to be any real probabilistic basis for any of the dispersion analyses. *ACTA* at 6. ACTA is correct. No attempt is made to determine the variations of risk within the corridor. In the downrange direction, the chance of a failure is considered equal at any given point on the flight trajectory. In the crossrange direction, the chance that debris will impact any given point within the flight corridor is based on its distance from the trajectory ground trace. Impacting the boundary of the flight corridor is considered a three-sigma event, and all points in between the trajectory ground trace and the flight corridor boundary vary linearly from zero to three-sigma.

Lastly, ACTA notes that in the risk analysis, the crossrange standard deviations are used to compute E_c. Using downrange risk models such as those found in appendix B, one can choose to vary the crossrange sigma up and down and compute the E_c as a function of sigma. Then a maximum E_c can be obtained within reasonable limits of the possible range of the crossrange sigma. This helps to eliminate the controversy about the determination of the width of the corridor. *ACTA* at 6.

The FAA agrees with ACTA in that the approach would provide a more accurate assessment of risk. If an applicant conducted such an analysis, it might consider offering the analysis as demonstrating an equivalent level of safety. However, the method appears to require an applicant to make several launch corridor computations adjusting the sigma value until an optimum value is found that produces exactly 30×10^{-6} E_c for the enclosed population. The FAA does not believe this is necessary for assessing most launch site locations, and has not adopted the suggested change. The analyses provided by the FAA are presented in a fashion that produces a binary decision. The risk computations for the populations enclosed by the corridor will either pass or fail the E_c criteria. If the resultant E_c is above the threshold the applicant can quickly decide if an azimuth or launch point adjustment will resolve the problem.

ACTA next states that the equation for casualty expectancy in appendix C contains the ratio of the casualty area to the populated area. This ratio should be limited to one, to avoid the possibility of predicting more casualties, given impact, than the number of people in the population center. *ACTA* at 6. The FAA agrees and the change is reflected in the appendix.

In the NPRM's discussion of the launch site location review, the FAA notes that for the sub-orbital launch of an unguided expendable launch vehicle, an applicant would analyze the risks associated with a series of impact dispersion areas around the impact points for spent stages. ACTA staff suggests that the FAA should also be concerned about any population centers within the three-sigma dispersions along the entire trajectory, as is done for orbital launch vehicles. *ACTA* at 8. As discussed in the NPRM, the FAA selected the event of greatest risk for guided and unguided launch vehicles. 64 FR 34353. For proven unguided launch vehicles, that risk stems from success. For purposes of assessing a launch point, the FAA does not believe it is necessary to address failures scenarios for launch points that are going to support proven unguided suborbital launch vehicles. Malfunction scenarios are discounted due to the very low probability of failure in proven unguided suborbital launch vehicles. An unguided suborbital launch vehicle will fly a wind-weighted trajectory in most cases. The impact dispersion areas for the rocket's stages account for the impact points within three-sigma probability of occurrence given the rocket does not experience a malfunction. If a launch point is to be used solely for unproven unguided suborbital launch vehicles, then an applicant must look at failure scenarios.

ACTA staff also believes the FAA should establish criteria for individual risk because it is a significant consideration needed to adequately provide protection for the public. *ACTA* at 9. The FAA does not disagree, and may revise its launch site regulations in the future. At this time, however, the FAA has decided to cover individual risk issues through a launch license, and has determined that the OEZ and other requirements are suitable for making a decision on the suitability of a launch site.

In the NPRM, in justifying the fact that stage impact is not assessed during the launch site location review for orbital launch vehicles, the FAA stated that risk calculations performed for launches from federal launch ranges demonstrate a relatively low risk posed by controlled disposition of stages in comparison to the risk posed by wide-spread dispersion of debris due to vehicle failure. ACTA suggests that this statement be tempered because risks posed by normally jettisoned Delta 2 GEMS are a significant element of concern from VAFB. *ACTA* at 9.

The FAA does not wish to imply that stage disposition is of no concern. Stage disposition is a critical safety issue and will be covered in launch license applications. However, because the location of drop zones is different for every launch vehicle, and because the launch site location review is not meant to assess specific launch vehicles, the FAA has designed the launch site location so that a launch site that does not have safe areas to dispose of stages will not likely pass the launch site location review. Significant population within the flight corridor, particularly near the flight trajectory ground trace, would raise the estimated E_c above the acceptable limit.

ACTA staff had a few comments on definitions. First, the NPRM defined ''flight corridor'' as an area on the Earth's surface estimated to contain the majority of hazardous debris from nominal and non-nominal flight of an orbital or guided suborbital launch vehicle.'' ACTA staff asked what about the other potential 49% of the debris? *ACTA* at 9. The FAA agrees that the definition should not have used the term ''majority'' and the word ''majority'' has been removed from the definition.

Second, the NPRM defined ''instantaneous impact point (IIP)'' as an impact point, following thrust termination of a launch vehicle, calculated in the absence of atmospheric drag effects.'' The definition should acknowledge that several forms of IIP calculations are possible. IIPs can be calculated based on vacuum, drag or oblateness corrections depending on the application. *ACTA* at 9, 10. The FAA agrees. The definition no longer states that it must be calculated in the absence of atmospheric drag effects. However, for purposes of part 420, IIP is calculated in the absence of atmospheric drag.

ACTA staff next commented on proposed section 420.15(b), in which the proposed rule stated ''For launch sites analyzed for expendable launch vehicles, an applicant shall provide each month and any percent wind data used in the analysis.'' ACTA at 10. For percent wind data, ACTA suggests use of mean winds. ACTA also suggests the use of a wind covariance matrix. Mean winds are called out in the launch site location review. An applicant should be able to use worse winds, e.g. three-sigma winds, if it desires. *ACTA* at 10. The FAA does not believe a statistical analysis of winds such as using a wind covariance matrix is necessary to assess a launch point. Wind covariance matrices are also not readily available from the suggested wind data source, so therefore the FAA will not incorporate the suggested changes.

Proposed section 420.23 stated that the FAA will evaluate the adequacy of a launch site location for unproven launch vehicles including all new launch vehicles, whether expendable or reusable, on a case-by-case basis. ACTA requested additional criteria. *ACTA* at 10. The FAA will rely on the goal of the launch site location review—to show that a launch vehicle can be launched safety from a given launch point. Unproven launch vehicles must be looked at carefully due to their inherently high probability of failure.

In the NPRM, the FAA proposed an overflight exclusion zone (OEZ) that an applicant must demonstrate is either unpopulated, is uninhabited at certain times, or from which the public can be excluded during launch. ACTA staff notes that using this overly conservative approach to risk analysis would likely prevent X–33 launches from the Air Force Flight Test Center (AFFTC). *ACTA* at 11. Similarly, NMOSC states that the requirement for, and specifications of, an OEZ should depend on the vehicle's reliability and whether it has multiple stages. NMOSC suggests that it not be required for a highly reliable, non-staging RLV. *NMOSC* at 3. The FAA agrees in part with ACTA and NMOSC. The size or existence of an OEZ for a reliable non-staging RLV,

depends on whether any area exists around the launch point where the E_c risk is equal to or greater than 30×10^{-6}, if one member of the public is inside. An overflight exclusion zone may or may not apply to an RLV, depending on the circumstances of a particular case analyzed. The approval of a flight corridor for an RLV, such as the X–33, would be handled on a case-by-case basis.

ACTA staff noted that the appendix A launch area is based on a Delta II. ACTA states that this has several shortcomings because the families of launch vehicles based on Castor-120 SRMs, such as Athena and Taurus, are more representative of those likely to be launched from a non-federal launch site. *ACTA* at 11. The FAA notes that an appendix A launch area is large enough to encompass launch vehicles based on Castor-120 SRMs. Although turning rates for the Athena and Taurus may be higher than Delta II, this is not critical for the appendix A flight corridor lines because appendix A can accommodate the Athena and Taurus turns.

ACTA states that in the launch area, ignoring the IIP displacement caused by a vehicle's malfunction turn rates until 50,000 ft. seems unwise based on the turning potential of most ELVs, especially the Athena and Taurus. *ACTA* at 11. The debris dispersion radius accounts for a number of failure scenarios, including the IIP displacement caused by a vehicle's malfunction turn rate. The debris dispersion radius is the estimated maximum distance from a launch point that debris travels given a worst-case launch vehicle failure and flight termination at 10 seconds into flight.

Other than the debris dispersion radius, ACTA is correct in that malfunction turns and trajectory dispersions are not explicitly accounted for in the launch area computations. The FAA does not believe this is necessary to assess the viability of a launch point. In the launch area, winds are the dominant dispersion effect for low-β debris pieces, accounting for up to 70% of the total launch area dispersion effect. Conservative assumptions in the appendix B method adequately cover the remaining percentage contributions to the overall impact dispersion.

ACTA staff suggests that in the launch area, the FAA should better communicate that the 10 and 100 mile limits are based on IIP and not on present position. *ACTA* at 11. The FAA agrees and has modified appendices A and B accordingly.

ACTA staff notes that for the launch and downrange areas, an applicant is to compute P_i for each populated area using the following equation:

$$P_i = \frac{\left(\frac{|y_2 - y_1|}{\sigma_y}\right)}{6\sqrt{2\pi}} \cdot \left(\exp\left(\frac{-\left(y_1/\sigma_y\right)^2}{2} \right) + 4 \cdot \exp\left[\frac{-\left(\frac{y_1 + y_2}{2\sigma_y}\right)^2}{2} \right] + \exp\left(\frac{-\left(y_2/\sigma_y\right)^2}{2} \right) \right) \cdot \left[\frac{P_f}{C} \cdot \frac{(x_2 - x_1)}{\dot{R}} \right]$$

ACTA suggests that this be replaced by the normal integral with a single footnote saying that it can be approximated using Simpson's rule. *ACTA* at 11. The FAA agrees that there are other ways to approximate the normal integral that are just as accurate as Simpson's rule. An applicant is not precluded from using other ways of computing the normal integral.

Space Access LLC also had a number of comments on the launch site location review. First, Space Access found the proposed rule difficult to accept in two areas. First, flight E_c issues should be outside the scope of site licensing and all flight-related and mission-based calculations are the responsibility of the launch operator. Providing several methods to simplify E_c is confusing, conflicting with other published guidance, and could be considered precedent setting. *Space Access* at 2. Much of what Space Access suggests is already reflected in the final rule. For individual launches, all flight-related and mission-based calculations are part of a launch operator license. The launch site location review is intended, however, to ensure that the FAA does not issue a license that cannot support the launch vehicles intended for launch from the launch site. Providing several methods to simplify E_c is meant to provide flexibility to applicants. Lastly, review of the appendices unearthed no conflicts with other published guidance.

Second, Space Access believes the proposed rule effectively precludes approval of any new commercial launch sites, because under appendix A and C, Cape Canaveral would be disapproved as a launch site for Delta, Atlas, and Titan vehicles if it were not on federal property. *Space Access* at 4. The FAA disagrees. Cape Canaveral would fail the proposed appendix A analysis but would not fail the proposed analysis under appendix B and C. The simplicity of appendix A is designed for launch sites that are in remote locations. Cape Canaveral is not a remote site.

Space Access adds that appendix B and C would not help the shortcomings of appendix A because this method uses the same casualty area numbers, which are the significant driver in the calculations. Space Access also comments that the casualty area provided in Table C–3 is too large and appendix C provided data would appear to be excessively conservative and overwhelms all other calculations. *Space Access* at 4. In response, the casualty area numbers are indeed conservative, but not excessively so. An applicant is also permitted to utilize a more refined analysis and provide a clear and convincing demonstration that its proposed method provides an equivalent level of safety to that provided in the appendices.

Similarly, Space Access states that appendix C may only allow the approval of small launch vehicles. This will encourage more launches of small payloads and therefore increase overall risk to the public by exposing the public to a large number of launches. A normalized risk evaluation, such as risk per pound of payload, minimizes total risk and should be considered in any risk methodology. *Space Access* at 5. The FAA disagrees that the proposed appendix C allows only for the approval of small launch vehicles. Space Access offers no support for this argument.

Space Access further states that the impact of appendix C is that potential launch site operators will fail to get sufficient local and state support, financial and legislative inputs, to work through issues with the FAA and potential launch operators. The enforcement of these proposed rules at this time would negatively affect the development of new safe launch sites for all classes of launch vehicles. *Space Access* at 5. The Texas Aerospace

Commission stated that the proposed rules preclude approval of any new launch sites, which are not already on federal launch ranges. These proposed rules would stop the progress being made in Texas and other states to secure investments and commitments for the development of safe, efficient and modern commercial spaceports. *Texas Aerospace Commission* at 1. Because Space Access and Texas Aerospace Commission do not offer evidence in support of their concerns, the FAA will continue to rely on the reasons it gave in the NPRM. The launch site location review is designed to avoid licensing the operation of a launch site that cannot safely support a launch. The launch site location review should not preclude the licensing of any launch site that can safely support launches.

Space Access suggests that the FAA delete all E_c calculations from the proposed rule for site operators. It comments that the appendix A and C methodology appears to be extremely inaccurate, the appendix B and C methodology lacks the fidelity required for use by launch operators for licensing, and actual vehicle E_c data is the only valid method. *Space Access* at 5. The Texas Aerospace Commission recommends the FAA consult with the RLV developers and proposed launch site operators/developers to establish a safe, less conservative, and simple method of calculating E_c. *Texas Aerospace* at 1. The FAA disagrees, noting that the appendices are designed to offer flexibility in ascertaining whether a site is acceptable. The FAA has determined that a review of a launch site location is a necessary component of any license application process. Moreover, an applicant is not tied to the appendices. For expendable launch vehicles, the FAA will accept other analyses that provides a clear and convincing demonstration that an applicant's proposed method provides an equivalent level of safety to that provided by the appendices. For reusable launch vehicles, an applicant defines a flight corridor that contains the hazardous debris from nominal and non-nominal flight of a reusable launch vehicle. The applicant must provide a clear and convincing demonstration of the validity of its flight corridor.

Space Access states that the launch point, debris dispersion area, and overflight exclusion zone definition and descriptions are of specific concern to a site operator and should be formalized. This guidance will directly benefit potential site operators by providing clear planning and procedures to use for proper land acquisition and site development work. *Space Access* at 5. In response, the FAA agrees that providing clear planning and procedures to use for proper land acquisition and site development work is important. The primary purpose of the launch site location review is to avoid the development of launch sites that can never support launches due to the proximity of population. Note that the debris dispersion area and overflight exclusion zones are only used to assess the adequacy of a launch point to support launches. The actual hazards areas for specific launch vehicles will be determined in the launch license process.

Space Access states that the FAA should delete the discussion of launch area and downrange area from the proposed rule. According to Space Access, these areas should not be of concern to a site operator because a site operator has little or no legal control, liability or responsibility in these areas—the launch operator does. Possible demarcation of responsible areas for a site operator is when a launch vehicle enters into international airspace (100 km or 300,000 feet or the crossing of a vehicle into airspace above international waters). Another possible definition is when takeoff or liftoff occurs. *Space Access* at 6.

The FAA agrees that a launch operator is responsible for the safety of a launch. However, the purpose of the launch site location review is to assess the safety of the launch point, not the policies and procedures of a specific launch operator, and these regulations place certain responsibilities upon a launch site operator. To adequately assess the safety of a launch point, one must look at more than just the local population. Downrange activities must be considered in evaluating the acceptability of the launch location, therefore launch area and downrange area requirements remain in the final rule.

Space Access believes that current reliability data for probability of failure (P_f) should be used for the specific vehicle or class of launch vehicles under consideration. *Space Access* at 6. The FAA would like to point out that an applicant may use probability values that reflect the type of launch vehicle it intends on launching from the launch point. The value must be reasonable. A good value should have a 95% confidence that the actual P_f is equal to or less than the value used.

Space Access believes that all commercial launches should be treated equally from any location. The FAA should not exempt commercial site operators from these rules at federal ranges. No benefits are provided by a federal launch range exemption to these rules. The perception by new commercial launch operators and new commercial site operators is they are being held to a higher standard. *Space Access* at 7; *see also Texas Aerospace* at 1 (all commercial launches should be treated equally from any location). In response, commercial site applicants at federal ranges are not exempted from all requirements of the final rule. If a launch point has already supported a launch of a particular class of launch vehicle, there is no reason for an applicant to repeat a demonstration already made.

Space Access recommends the FAA provide proposed universal rules applicable to all launch sites, i.e. for RLVs and ELVs, as soon as possible instead of making rules applicable only to ELVs. *Space Access* at 7. Similarly, NMOSC believes that since the focus of the launch site location review is expendable launch vehicles, the FAA does not see RLVs as credible launch vehicles. *NMOSC* at 2. In response, the basic public safety goals are the same for ELVs, RLVs, and reentry vehicles. In other words, the level of safety that is required by the FAA is universal. However, the means to achieve public safety with an RLV mission may be different from an ELV mission. The credibility of RLV's is not at issue here. The reason the FAA has well defined methods of assessing a launch site for expendable launch vehicles is because 40 years of empirical data exists to define such methods.

Space Access lastly states that the unproven vehicle exclusion is unjustified. The FAA should provide a clear definition of unproven vehicles. *Space Access* at 7. The FAA has asked the RLV industry for suggestions on what definition they might suggest. Space Access does not provide a suggestion. There are a number of factors that the FAA has considered in whether to provide a precise definition to the term ''unproven.'' NASA, for example, does not consider a vehicle's demonstrated reliability adequate for placing a NASA payload on the vehicle, unless the vehicle has flown at least 14 times. Another approach might be to examine the flight history as an ''unproven'' vehicle and determine that statistical point in which the probability of catastrophic failure can be shown to be equal to or less than some number at the 95% confidence level. Historically, the flights of new vehicles have demonstrated failure rates much higher than design analyses indicated. The data presented for use in the final rule is specifically based on mature vehicles. For these reasons and its concern for

public safety, the FAA will address unproven vehicles on a case-by-case basis based on the facts available.

NMOSC also had many comments on the launch site location review. First, for the most part, NMOSC states that the draft requirements do not adequately address the launch of RLVs or unproven vehicles, and is concerned that an operator could spend a lot of money and time preparing an application, only to find that the application is incomplete or the site unacceptable. The FAA should provide more in the way of guidelines for RLV-only sites. *NMOSC* at 1.

The FAA disagrees that an RLV operator has to guess what the FAA will look for in a license application. The FAA's flight safety goals are clear—the risk to the public must be at an acceptable level, that is, an expected casualty of less than or equal to 30×10^{-6}. What is acceptable for RLVs is described in the rule concerning reentry. 65 FR 56617.

The flight safety approach for RLVs and ELVs are different, so naturally a launch point suitable for a RLV may not be suitable for an ELV. The reason the FAA has articulated clear methods of assessing a launch site for ELVs is because 40 years of empirical data exists to promulgate such methods.

In the NPRM, the FAA stated that references to a guided launch vehicle, whether orbital or sub-orbital, may be taken to mean that the vehicle has an FTS. References to an unguided sub-orbital could be understood to mean that the vehicle does not possess an FTS. NMOSC believes that this does not accommodate RLVs very well. *NMOSC* at 2. In response, the FAA did not mean to imply that RLV's would have to have an FTS. This applies only to guided ELV's. The final rule has been modified to clarify this point.

In the NPRM, the FAA stated, as an example, that because a launch licensee will need to assure the adequacy of ground tracking, approval of ground tracking systems will be handled in the launch license process even if a launch site operator provides the service. NMOSC asks what about tracking from space? *NMOSC* at 2. Tracking systems were not a subject of the NPRM. The FAA was only pointing out that flight safety services such as tracking will be assessed for a launch license, not for a launch site operator license. No implication was intended about how tracking is accomplished.

In the NPRM, the FAA states that for the ''semi-automated method'' of plotting on maps, the ''Mercator'' and ''Oblique Mercator'' are adequate cylindrical projections, the ''Lambert-Conformal'' and ''Albers Equal-Area'' are adequate conic projections, and the ''Lambert Azimuthal Equal-Area'' and ''Azimuthal Equidistant'' are adequate plane projections. An applicant may use other maps, but the applicant would be required to demonstrate an equivalent level of accuracy over the required distances. NMOSC suggest the FAA provide clarification on ''equivalent level of accuracy over the required distances.'' *NMOSC* at 2.

As noted in the NPRM, all map projections have inherent distortions. The distortions are virtually unavoidable and are directly related to the techniques for displaying latitude and longitude lines on a flat surface area. The flight corridor methods are primarily sensitive to azimuthal direction and geodetic length of the flight corridor line segments. The launch site location review methods require an applicant to use cylindrical, conic, and plane map projections because they produce only small error with straight-line measurements. Therefore, ''equivalency'' would be based on how well the applicant-proposed map projection preserves the accuracy of scale and direction.

NMOSC suggests the FAA provide corridor standards for vehicles that do not employ destructive termination. *NMOSC* at 3. The FAA disagrees. A flight corridor is a means of defining the population that is at risk due to a launch. Destructive flight termination is not specifically ingrained in the standard provided. The appendices provided corridor standards for ELV's because reliable flight termination systems allow one to determine the worse-case reach of debris due to a failure. Corridors for RLV's are not as straightforward, and are dependent on the technology involved. That is why the FAA has opted for a case-by-case approach. What is of interest are all failures that could lead to exposure of the uninvolved public. Note that a final rule has been published with standards for the operation of RLVs and reentry vehicles. 65 FR 56617.

NMOSC notes that failure probability is a big issue for both this and the RLV NPRM, suggesting that ninety percent (90%) reliability is way too low for an RLV. For purposes of site licensing, NMOSC suggests no lower than ninety nine percent (99%) reliability be assumed for the analyses; this is the proven reliability of the Space Shuttle. *NMOSC* at 3. The FAA disagrees. There are accepted ways to estimating the design reliability of a vehicle and for proving what the reliability is. Unfortunately, historically, design reliability has never been achieved during the first flights of any new vehicle. Proof comes only through verification and validation with empirical flight data. There is no basis for the statement that 90% is too low for an RLV. This number may be well below intended design reliability, but 99% reliability has never been shown for any new RLV. The Shuttle's historic data does not support a value of 99% at any reasonable confidence level. At a 95% confidence level, the shuttle's demonstrated reliability is only about 97%. In any case, RLV flight safety standards are covered in the final rule for RLVs and reentry operations. 65 FR 56617.

Christopher Shove, Ph.D., Senior Consultant, Space Data Systems, Inc, states that for some launch vehicles, the proposed failure rate of 10% is five times greater than those vehicles' historical failure rate. The FAA should use actual failure rates and double them for conservatism. The proposed constant failure rate creates an unfair playing field among different vehicle types by lumping them into one category. *Shove* at 2. The FAA disagrees that for some launch vehicles, the proposed failure rate of 10% is five times greater than those vehicles' historical failure rate. No vehicle has a failure rate of 2% at any reasonable confidence level. The failure rate of 10% was chosen to find an acceptably conservative value while not overly penalizing seasoned launch vehicles. The seasoned launch vehicles currently have failure rates ranging from 2.5% for Ariane to 6.4% for Proton. Doubling any failure rate exceeding 5% would burden the industry by adding unnecessary conservatism at a 95% confidence level.

In the NPRM, after an applicant has computed casualty expectancy for a flight corridor, the proposed regulations required that it be multiplied by a safety factor of two. NMOSC suggested that the FAA eliminate the safety factor and set the standard at 15×10^{-6}. *NMOSC* at 3. As noted above in the summary section, the multiplier has been taken out in the final rule.

NMOSC states that appendix C seems to favor coastal sites because appendix C provides the option for an applicant to further simplify the estimation of casualty expectancy by making worst-case assumptions that would produce a higher value of the corridor E_C compared with the analysis defined in appendix C, subparagraphs (c)(1)–(8). *NMOSC* at 3. The FAA disagrees. The simplifying options in the appendices were directed at launch sites that are remote enough that they pass a test that is simple but extremely conservative. This does not preclude other launch

sites. The FAA's concern is that it be demonstrated that operations can be conducted safely from the site. If circumstances are such that it is easier for one site to make this demonstration than another, so be it.

Lastly, NMOSC commented on the proposed requirement that at least two days prior to flight of a launch vehicle, the licensee shall notify local officials and all owners of land adjacent to the launch site of the flight schedule. This should not be required for highly reliable, non-staging RLVs. If it is, what methods of notification are acceptable? *NMOSC* at 3. In response, when RLV's begin to have routine operations that make this requirement unworkable, the FAA will reevaluate the requirement. The intent will remain unchanged, however, which is to ensure that the local community has reasonable notice of upcoming launch activity to make any necessary preparations.

Mr. Shove noted that the FAA states that the proposed rule would allow the FAA to disapprove any launch site request because the applicant could not prove it is safe, which proof, according to scientific method, is impossible. *Shove* at 1. The FAA disagrees. Launch activities take place today from sites that clearly meet these standards. The final rule articulates an objective standard that is quite possible to demonstrate. The FAA is not free to arbitrarily turn down a launch site application. The potential operators of a launch site must demonstrate that operations can be safely conducted from the site. It the applicant can not, then the FAA will not issue a license.

He also questioned whether the FAA definition of sub-orbital launch vehicle would include the vehicles used in programs such as ''Rockets for Schools,'' and thus require those states, schools, and launch areas to apply for a launch site operator license. *Shove* at 2. Such sites would not. If a launch meets the definition of amateur rocket activity, no launch license is required. Similarly, launch sites that support such vehicles do not require a license.

Mr. Shove also states that the U.S. Census Bureau's TIGER files provide the data to create census block polygons. The FAA should allow the use of such data to calculate populated areas, so that greater accuracy can be obtained. Calculating populated areas by block groups may give an inaccurately high population estimate to the detriment of what could be a safe launch area and flight trajectory. *Shove* at 2.

The FAA would like to stress that an applicant is always free to use a more accurate method. The method in the NPRM requires that population be at least at a census block group level. It does not preclude more accurate data. The launch site location review is written so that census block groups are the largest size populated area allowed. An applicant may certainly use census block polygons, which are smaller and therefore allow for a higher fidelity analysis.

Lastly, Mr. Shove commented on the appendix B requirement that an applicant obtain the launch point geodetic latitude on the WGS–84 ellipsoidal Earth model. An applicant may do this using the Global Positioning System. His question is whether this means the single receiver accuracy of ±100 meters, differential GPS with two receiver accuracy of less than a meter, or differential GPS using a base station and a receiver accuracy of ±10 cm? *Shove* at 2.

The launch site location review requires the launch area map scale to be ''not less than 1:250,000 inches per inch.'' An applicant is required to show that the measurement instruments provide the required accuracy. Latitude and longitude can be mechanically measured to four decimal point accuracy on that scale map. Four decimal point accuracy in degrees latitude/longitude at the equator is approximately 36 feet [11 meters].

The Oklahoma Aeronautics and Space Commission (OASC) had one comment on the launch site location review. It requests clarification on what constitutes sounding rockets. There is great variance in the capability of sounding rockets and the altitudes they reach. OASC recommends classification based on altitude and propellant utilized. *Oklahoma Aeronautics and Space Commission* at 1.

A sounding rocket is a common term for suborbital launch vehicles. These final rules adopted today do not use that term. However, suborbital launch vehicles are defined, and mean exactly what their name implies—launch vehicles that do not obtain orbital velocity. The FAA used altitude in the NPRM to classify sounding rockets, but not propellant. The type of propellant used by a sounding rocket was not used as a factor because it is not an important consideration for purposes of the launch site location review.

Don A. Nelson commented that the proposed rules do not specifically address the flight testing of launch vehicles from a proposed launch site. He believed that the FAA must establish an experimental flight-testing category for flights from launch sites under FAA jurisdiction. Anything less would subject the public to very high risks. This is because, historically, all launch vehicles during the flight test period have experienced catastrophic in-flight failures. This unacceptable failure rate requires that all population, including ground and air traffic, be removed from the areas defined by the instantaneous impact points of the nominal and worst-case dispersed trajectories of the flight test vehicle. The flight test corridor must be free of all-high value property and hazardous storage areas. White Sands Missile Range (WSMR) has set the standard for testing experimental launch vehicles within the continental United States. WSMR requires population be removed from the test range, and all ground and air traffic in the test range is prohibited during the flight test. *Don A. Nelson* at 1.

The FAA agrees that the flight safety issues of an unproven vehicle are valid concerns and addresses the issue in the rulemaking governing reentry. 65 FR 56617. Note that the FAA's intent is to ensure that all operations conducted on a launch site are done so in a manner that protects public health and safety and safety of property. The FAA does not intend to allow experimental flight testing under any circumstance which places the public at greater risk. This may mean that the proposed operations are restricted or limited in scope in order to ensure public safety is achieved. These issues will be covered in a launch license application review process.

Kistler Aerospace Corporation commented that treating RLV's on a case-by-case manner is the proper approach and fully justified in light of the new capabilities and operational concepts that will be brought to the industry by reusable launch systems. *Kistler* at 1.

G. License Conditions

Subpart C contains standard terms and conditions of a license. It covers such items as the need for a licensee to operate a launch site in accordance with the representations contained in its license application, the duration of a license, transfer of a license, license modification, and compliance monitoring.

A license may also contain conditions flowing from the various reviews conducted during the application process. For example, a license granted following approval of a launch site location is limited to the launch points analyzed, and the type and class of launch vehicle used in the demonstration of site location safety. An applicant may choose to analyze all three types of launch vehicles in its application. An FAA launch site operator license authorizing the

operation of a launch site for launch of an orbital expendable launch vehicle allows the launch of vehicles from the site that were less than or equal to the class of launch vehicle, based on payload weight, used to demonstrate the safety of the site location. If a licensee later wanted to offer the launch site for the launch of a larger class of vehicles or a different type of launch vehicle, such as an unguided sub-orbital launch vehicle, the licensee would be required to request a license modification and demonstrate that the larger vehicle or different type of vehicle could be safely launched from the launch site. Likewise, the addition of a new launch point would require a license modification. The demonstration would be based on the same kinds of analyses used for the original license. In some cases, a licensee might be able to use the safety analyses performed by a launch operator to meet location review requirements.

Discussion of Comments

The agency did not receive any specific comments on the conditions of a license but one change was made in this area between the final rule and the Launch Site NPRM. The section on license modifications has been changed to clarify that changes in operations require prior approval of the FAA

H. Operational Responsibilities

The FAA is imposing certain operational responsibilities on an operator of a launch site. In addition, the FAA distinguishes between activities covered by a license to operate a launch site and those covered by a launch license. Any activity that will be approved as part of a launch license will not be covered in a launch site operator license even if the launch site operator provides the service. For example, because a launch licensee will need to ensure the adequacy of ground tracking, approval of ground tracking systems will be handled in the launch license process even if a launch site operator provides the service. Similarly, in the case of ground safety, a launch site operator may provide fueling for a launch licensee, but safe procedures for fueling will be addressed in the launch license.

The operational requirements being adopted for the operator of a launch site addresses control of public access, scheduling of operations at the site, notifications, recordkeeping, launch site accident response and investigation, and explosive safety. A launch site operator licensee is required to control access to the site. Security guards, fences, or other physical barriers may be used. Anyone entering the site must, on first entry, be informed of the site's safety and emergency response procedures. Alarms or other warning signals are required to alert persons on the launch site of any emergency that might occur when they are on site. If a launch site licensee has multiple launch customers on site at one time, the licensee must have procedures for scheduling their operations so that the activities of one customer do not create hazards for others.

An operator of a launch site has responsibilities regarding explosives, specifically, those dealing with lightning and electric power lines.

The launch site operator is responsible for all initial coordination with the appropriate FAA regional office having jurisdiction over the airspace where launches will take place as well as the U.S. Coast Guard. The FAA's Air Traffic Service and, if applicable the Coast Guard, issues Notices to Airmen and Mariners, respectively, to ensure that they avoid hazardous areas. An FAA Air Route Traffic Control Center also closes airways during a launch window, if necessary. A launch site operator is required to obtain an agreement regarding procedures for coordinating contacts with these agencies for launches from the site. The requirement for coordinating with the Coast Guard might not, of course, always be applicable, for example, for an inland launch site.

The regulatory text has been changed from the Launch Site NPRM to clarify that the Coast Guard and FAA agreements must be completed during the application process, and must be complied with during the term of the license.

A launch site operator licensee must also notify local officials with an interest in the launch. These include officials with responsibilities that might be called into play by a launch mishap, such as fire and emergency response personnel.

A launch site operator is required to develop and implement a launch site accident investigation plan containing procedures for investigating and reporting a launch site accident. This extends similar reporting, investigation and response procedures currently applicable to launch related accidents and incidents to accidents occurring during ground activities at a launch site.

The FAA did not propose the definition of mishap in the Launch Site NPRM. The definition that currently exists in section 401.5 was modified to include launch site accidents.

Of more significance, the accident investigation plan section has been modified to require a licensee to participate in an investigation of a launch accident for launches launched from the launch site, and to cooperate with FAA or National Transportation Safety Board (NTSB) investigations of a launch accident for launches launched from the launch site. This was added because launch mishaps may have a connection with the launch site.

Discussion of Comments

In the NPRM, the FAA stated that a launch site operator is responsible for ground and flight safety under its FAA license, and that the FAA would revisit ground safety issues in its development of rules for launches from non-federal launch sites. ACTA staff noted that ground safety issues are equally critical to this rule because it requires an explosive site plan. *ACTA* at 8. The New Mexico Office for Space Commercialization (NMOSC) suggested that it should be a site operator's responsibility to ensure that procedures are in place to preclude human error accidents involving explosive materials and static discharge events. *NMOSC* at 1.

The FAA disagrees. Most ground safety issues are directly related to operations of a launch operator, not those of a launch site operator. Requirements addressing ground safety procedures are more appropriate requirements for launch operators, since launch operators conduct these types of hazardous operations. Most other risks and phenomena associated with pre-flight operations are typically mitigated by restrictions on the operations. That said, however, nothing precludes a launch site operator from imposing additional requirements on customers on the facility as long as those requirements do not violate FAA requirements or other laws.

NMOSC made the point that ground safety issues would be better left to other agencies such as OSHA, ATF, and state licensing organizations. Vast quantities of liquid oxygen (LO_2), liquid hydrogen (LH_2), and nitrogen tetroxide (N_2O_4), and other materials are shipped and used in interstate commerce. Why single out the launch industry for special regulations? *NMOSC* at 1. The FAA agrees in principal, and has attempted to only add requirements where those other agency regulations do not apply.

LMC had comments concerning whether the proposed requirements might affect launch operators performing services at commercial launch sites, and whether the

requirements are consistent with ground and flight safety requirements imposed on launch operators by DOD and NASA at federal launch ranges. The Air Force tailors the standards set forth in EWR 127–1 to each operator prior to such operator entering the federal range for the purposes of conducting launch activities. LMC strongly recommends that the FAA, like the Air Force, employ a case-by-case tailoring of the standards. *NMOSC* at 2.

In response, the FAA has two comments. First, requirements for launch operators are covered in a separate proposal on licensing and safety requirements for launch. Second, for launch site operators, the rules that the FAA is adopting today should be general enough to fit most launch site scenarios. The FAA recognizes, however, that there may be more than one way of meeting a requirement. That is why a prospective applicant is required to consult with the FAA, in accordance with 14 CFR 413.5, before submitting an application. Early consultation enables an applicant to identify unique approaches to meeting regulatory requirements. The FAA and an applicant can then work together to resolve such issues.

The 45SW/SESE commented on the Accident Investigation Plan requirements. It asks what agency or agencies will have responsibility to maintain accident investigation reports and why? *45SW/SESE* at 2. If a launch site accident occurs, the NTSB or FAA will investigate, and will maintain an investigation record. A launch site operator may also conduct an investigation of its own, and will be responsible for maintaining the investigation record in accordance with section 420.61.

ACTA also had comments on the Accident Investigation Plan requirements and suggests that the definition of ''launch site accident'' be clarified by either deleting ''ground'' or changing the definition of ''launch site accident'' to read ''ground or launch activity.'' The NPRM defined ''launch site accident'' as ''an unplanned event occurring during a ground activity at a launch site resulting in a fatality or serious injury (as defined in 49 CFR 830.2) to any person who is not associated with the activity, or any damage estimated to exceed $25,000 to property not associated with the activity.'' *ACTA* at 10. The FAA does not agree with ACTA suggestion. A launch site accident is strictly one that occurs during a ground activity. An accident caused by the flight of a launch vehicle is a launch accident, as defined in 14 CFR 401.5.

LMC commented on the Accident Investigation Plan requirements, requesting clarification of whether the launch site operator or the launch operator accident investigation plans have priority if there were conflicts between plans. *LMC* at 4.

The FAA offers the following guidance. Although no accident investigation plan has priority per se, the applicability of an accident investigation plan depends on the nature of a mishap. Compared to the NPRM, the definition of mishap has been changed in this final rule to accord with another rule governing reentry. 65 FR 56617. A mishap is now defined in section 401.5 as a launch or reentry accident, launch or reentry incident, launch site accident, failure to complete a launch or reentry as planned, or an unplanned event or series of events resulting in a fatality or serious injury (as defined in 49 CFR 830.2), or resulting in greater than $25,000 worth of damage to property. The purpose of this definition is to encompass all incidents that must be reported, responded to, or investigated in some manner by a launch operator, a reentry operator, or launch site operator.

At a launch site operated under an FAA license, the launch site operator would have a launch site accident investigation plan and each launch operator on the launch site would have an individual launch accident investigation plan. Each plan would cover different mishaps, although there is some overlap, as discussed below. Table 4 is also provided as a guide.

A launch site operator's launch site accident investigation plan covers launch site accidents only. A launch site accident is an unplanned event occurring during a ground activity at a launch site resulting in a fatality or serious injury to any person who is not associated with the activity, or any damage estimated to exceed $25,000 to property not associated with the activity. In other words, if a member of the public is injured or property belonging to a member of the public over $25,000 is damaged due to a ground activity on the launch site, a launch site operator must report, respond to, and investigate the mishap. The FAA considers any licensee or its employees, or any licensee customer, contractor, or subcontractor or the employees of any of these persons to be associated with a ground activity. Property not associated with the activity will typically include any property belonging to members of the public. Property associated with the activity includes the property of a launch site operator or launch licensee, or either licensee's customers, contractors or subcontractors.

A launch operator's launch accident investigation plan, on the other hand, covers launch accidents, launch incidents, and other mishaps. Launch accidents and launch incidents are strictly related to the flight of a launch vehicle, not ground activities. So, for launch accidents and launch incidents, there is no overlap with launch site operator reporting requirements.

Where there is overlap in launch operator and launch site operator accident investigation plans is when a mishap occurs on the ground. A launch operator must notify the FAA immediately in the event of a mishap that involves a fatality or serious injury, and within 24 hours in the event of a mishap that does not involve a fatality or serious injury. The person injured does not have to be a member of the public. Also, a launch operator must notify AST or the Washington Operations Center within 24 hours in the event damage is estimated to exceed $25,000 to property not associated with the activity.

In summary, both a launch site operator and a launch operator must report, respond to, and investigate a mishap occurring during a ground activity at a launch site resulting in a fatality or serious injury to any person who is not associated with the activity, or any damage estimated to exceed $25,000 to property not associated with the activity. The reason this type of mishap is covered by both plans is that both a launch site operator and launch operator have a responsibility to protect the public from hazardous ground activities. Note, however, that either the launch site or launch operator may agree to lead one investigation for both.

TABLE 4.—MISHAP INVESTIGATIONS

Event	Launch operator reporting requirement (14 CFR 415.41(b))	Launch site operator reporting requirement (14 CFR 420.59(b))
Launch accident—an unplanned event occurring during the flight of a launch vehicle resulting in the known impact of a launch vehicle, its payload or any component thereof outside designated impact limit lines; or a fatality or serious injury (as defined in 49 CFR 830.2) to any person who is not associated with the flight; or any damage estimated to exceed $25,000 to property not associated with the flight that is not located at the launch site or designated recovery area.	Immediate notification to the Federal Aviation Administration (FAA) Washington Operations Center	None.
Launch incident—an unplanned event occurring during the flight of a launch vehicle, other than a launch accident, involving a malfunction of a flight safety system or failure of the licensee's safety organization, design or operations.	Immediate notification to the Federal Aviation Administration (FAA) Washington Operations Center	None.
Launch site accident—an unplanned event occurring during a ground activity at a launch site resulting in a fatality or serious injury (as defined in 49 CFR 830.2) to any person who is not associated with the activity, or any damage estimated to exceed $25,000 to property not associated with the activity.	Immediate notification to the Federal Aviation Administration (FAA) Washington Operations Center in the event of a fatality or serious injury. Notification within 24 hours to AST or the Washington Operations Center in the event of damage estimated to exceed $25,000 to property not associated with the activity	Immediate notification to the Federal Aviation Administration (FAA) Washington Operations Center.
Other Mishap*: • Failure to complete a to launch as planned. • An unplanned event or series of events resulting in a fatality or serious injury to any person who is associated with the activity. • An unplanned event or series of events resulting in greater than $25,000 worth of damage to a payload, a launch vehicle, a launch support facility or government property located on the launch site.	Immediate notification to the Federal Aviation Administration (FAA) Washington Operations Center in the event of a fatality or serious injury Notification within 24 hours to AST or the Washington Operations Center in the event of failure to complete a launch as planned, or greater than $25,000 worth of damage to a payload, a launch vehicle, a launch support facility or government property located on the launch site.	None.

*Mishap means a launch or reentry accident, launch or reentry incident, launch site accident, failure to complete a launch or reentry as planned, or an unplanned event or series of events resulting in a fatality or serious injury (as defined in 49 CFR 830.2), or resulting in greater than $25,000 worth of damage to property.

IV. Part Analysis

Part 401—Organization and Definitions

Section 401.5 contains definitions of significant terms used in all of Chapter III. The term ''mishap'' has been revised to include launch site accidents as part of the definition of mishap. The term ''mishap'' is a general term for all unplanned events at a launch site or that occur during a launch or reentry resulting in injury, or damage to or loss of equipment or property. Mishaps include but are not limited to launch or reentry accidents, launch or reentry incidents, and launch site accidents. Mishaps also include failure to complete a launch or reentry as planned, or an unplanned event or series of events resulting in a fatality or serious injury (as defined in 49 CFR 830.2), or resulting in greater than $25,000 worth of damage to property.

Part 417—License to Operate a Launch Site

The FAA removes and reserves part 417 and creates part 420 to address licensing and safety requirements for operation of a launch site.

Part 420—License to Operate a Launch Site

Section 420.1 describes the scope of part 420. Part 420 encompasses the information and demonstrations that must be submitted as part of a license application, the bases for license approval, license terms and conditions, and post-licensing requirements with which a licensee must comply to remain licensed.

Section 420.3 specifies the person who must apply for a license to operate a launch site, and the person who must comply with regulations that apply to a licensed launch site operator. Because a launch site operator is someone who offers a launch site to others for launch, only someone proposing such an offer need obtain a license to operate a launch site. A launch operator proposing to launch from its own launch site need only obtain a launch license because a launch license will address safety issues related to a specific launch and because a launch license will encompass ground operations. In response to comments, as discussed earlier, a person operating a launch site that only supports amateur rocket activities does not need a license under part 420.

Section 420.5 adds terms that have not been previously defined by the FAA. These definitions apply in the context of part 420, which governs the licensing and safety requirements for operation of a launch site. These terms do not apply outside part 420. Specifically, the following terms are defined. Unless otherwise noted, they remain unchanged from the definitions proposed in the Launch Site NPRM.

Ballistic Coefficient (β) means the weight (W) of an object divided by the

quantity product of the coefficient of drag (C_d) of the object and the area (A) of the object.

$$\beta = \frac{W}{(C_d \cdot A)}$$

A ballistic coefficient is a parameter used to describe flight characteristics of an object.

Compatibility means the chemical property of materials that may be located together without adverse reaction. Compatibility in storage exists when storing materials together does not increase the probability of an accident or, for a given quantity, the magnitude of the effects of such an accident. Compatibility determines whether materials require segregation.

Debris dispersion radius (D_{max}) means the estimated maximum distance from a launch point that debris travels given a worst-case launch vehicle failure and flight termination early in flight. For an expendable launch vehicle, flight termination is assumed to occur at 10 seconds into flight. No assumptions are made for reusable launch vehicles. If an expendable launch vehicle failure occurs shortly after ignition, and a flight termination system is employed, the FAA expects the debris to be contained within an area described by D_{max}.

Downrange area means a portion of a flight corridor beginning where a launch area ends and ending 5,000 nautical miles (nm) from the launch point for an orbital launch vehicle, and ending with an impact dispersion area for a guided sub-orbital launch vehicle.

E,F,G coordinate system means an orthogonal, Earth-fixed, geocentric, right-handed system. The origin of the coordinate system is at the center of an ellipsoidal Earth model. The E-axis is positive directed through the Greenwich meridian. The F-axis is positive directed though 90 degrees east longitude. The EF-plane is coincident with the ellipsoidal Earth model's equatorial plane. The G-axis is normal to the EF-plane and positive directed through the north pole.

E,N,U coordinate system means an orthogonal, Earth-fixed, topocentric, right-handed system. The origin of the coordinate system is at a launch point. The E-axis is positive directed east. The N-axis is positive directed north. The EN-plane is tangent to an ellipsoidal Earth model's surface at the origin and perpendicular to the geodetic vertical. The U-axis is normal to the EN-plane and positive directed away from the Earth.

Effective casualty area (A_c) means the aggregate casualty area of each piece of debris created by a launch vehicle failure at a particular point on its trajectory. The effective casualty area for each piece of debris is the area within which 100 percent of the unprotected population on the ground are assumed to be a casualty, and outside of which 100 percent of the population are assumed not to be a casualty. This area is based on the characteristics of the debris piece including its size, the path angle of its trajectory, impact explosions, and debris skip, splatter, and bounce. An effective casualty area also accounts for the size of a person.

Explosive means any chemical compound or mechanical mixture that, when subjected to heat, impact, friction, detonation or other suitable initiation, undergoes a rapid chemical change that releases large volumes of highly heated gases that exert pressure in the surrounding medium. The term applies to materials that either detonate or deflagrate.

Explosive division has also been added since the Launch Site NPRM and means the hazard class 1 division of an explosive as defined by the United Nations Organization classification system for transport of dangerous goods, and as determined in accordance with 49 CFR part 173, subpart C. The term ''division 1.3 explosive'' was proposed but not adopted because the general terms for hazard class and explosive division have been added instead.

Explosive equivalent means a measure of the blast effects from explosion of a given quantity of material expressed in terms of the weight of trinitrotoluene (TNT) that would produce the same blast effects when detonated.

Explosive hazard facility means a facility at a launch site where solid propellant, liquid propellant, or other explosives are stored or handled. This term has been slightly modified from the Launch Site NPRM to include other explosives other than propellants.

Flight azimuth means the initial direction in which a launch vehicle flies relative to true north expressed in degrees-decimal-degrees. For example, due east is 90 degrees.

Flight corridor means an area on the Earth's surface estimated to contain the hazardous debris from nominal flight of a launch vehicle, and non-nominal flight of a launch vehicle assuming a perfectly functioning flight termination system or other flight safety system. This has been changed from the Launch Site NPRM in two respects. The proposed definition included the phrase ''contain the majority of hazardous debris'' which, as discussed in the comment section, is incorrect. The new definition also makes clear that the flight corridor is based on a perfectly functioning flight termination system.

Guided sub-orbital launch vehicle means a sub-orbital rocket that employs an active guidance system.

Hazard class has been added since the NPRM and means the class of dangerous good defined by the United Nations Organization classification system for transport of dangerous goods, and as determined in accordance with 49 CFR part 173, subpart C.

Impact dispersion area means an area representing an estimated three standard deviation dispersion about a nominal impact point of an intermediate or final stage of a sub-orbital launch vehicle.

Impact dispersion factor means a constant used to estimate, using a stage apogee, a three standard deviation dispersion about a nominal impact point of an intermediate or final stage of a sub-orbital launch vehicle. Intermediate stages include all stages up to the final stage.

Impact dispersion radius (R_i) means a radius that defines an impact dispersion area. It applies to all launch vehicle stages.

Impact range means the distance between a launch point and the impact point of a sub-orbital launch vehicle stage.

Impact range factor means a constant used to estimate, when multiplied by a stage apogee, the nominal impact point of an intermediate or final stage of a suborbital launch vehicle.

Instantaneous impact point (IIP) means an impact point, following thrust termination of a launch vehicle. IIP may be calculated with or without atmospheric drag effects. This is a change from the Launch Site NPRM. The NPRM limited the definition to a vacuum IIP. Note that the analyses of part 420 use vacuum IIP.

Instantaneous impact point (IIP) range rate means a launch vehicle's estimated IIP velocity along the Earth's surface. It is typically abbreviated as R, or R-dot.

Intraline distance means the minimum distance permitted between any two explosive hazard facilities in the ownership, possession or control of one launch site customer. Intraline distance prevents the propagation of an explosion. In other words, with an appropriate intraline distance, an explosive mishap at one explosive hazard facility would not cause an explosive event at another explosive hazard facility. The FAA anticipates that worker safety requirements will dictate protection of employees and anticipates that all licensees will familiarize themselves with those

requirements and conform to them in accordance with the law. Unlike distances used to protect the public, intraline distance will not offer workers the same level of protection as the public.

Launch area means, for a flight corridor defined in accordance with appendix A, the portion of a flight corridor from the launch point to a point 100 nm in the direction of the flight azimuth. For a flight corridor defined in accordance with appendix B, a launch area is the portion of a flight corridor from the launch point to the enveloping line enclosing the outer boundary of the last debris dispersion circle.

Launch point means a point on the Earth from which the flight of a launch vehicle begins, and is defined by the point's geodetic latitude, longitude and height on an ellipsoidal Earth model.

Launch site accident means an unplanned event occurring during a ground activity at a launch site resulting in a fatality or serious injury (as defined in 49 CFR 830.2) to any person who is not associated with the activity, or any damage estimated to exceed $25,000 to property not associated with the activity. The FAA considers any licensee or its employees, or any licensee customer, contractor, or subcontractor or the employees of any of these persons to be associated with a ground activity. Property not associated with the activity will typically include any property belonging to members of the public or personal property of employees. Property associated with the activity includes the property of a launch site operator or launch licensee, or either licensee's customers, contractors or subcontractors.

Net explosive weight (NEW) means the total weight, expressed in pounds, of explosive material or explosive equivalency contained in an item. This term is used for applying Q-D criteria to solid propellants and other explosives, and for liquid propellants when explosive equivalency applies. Explosive equivalency applies to liquid propellants when a liquid fuel and a liquid oxidizer are close enough together that their explosive potential combined must be used when determining prescribed distances to the public.

Nominal means, in reference to launch vehicle performance, trajectory, or stage impact point, a launch vehicle flight where all launch vehicle aerodynamic parameters are as expected, all vehicle internal and external systems perform as planned, and there are no external perturbing influences (*e.g.*, winds) other than atmospheric drag and gravity.

Overflight dwell time means the period of time it takes for a launch vehicle's IIP to move past a populated area. For a given populated area, the overflight dwell time is the time period measured along the nominal trajectory IIP ground trace from the time point whose normal with the trajectory intersects the most uprange part of the populated area to the time point whose normal with the trajectory intersects the most downrange part of the populated area.

Overflight exclusion zone means a portion of a flight corridor, which must remain clear of the public during the flight of a launch vehicle.

Populated area means a land area with population. For a part 420 site location risk analysis of a populated area within the first 100 nm of a launch point, a populated area is no greater than a census block group in the United States, and an equivalent size outside the United States. For analysis of a part 420 flight corridor more than 100 nm downrange from the launch point, a populated area is no greater than a 1° x 1° latitude/longitude grid, whether the populated area is in the United States or not.

Population density means the number of people per unit area in a populated area.

Position data means data referring to the current position of a launch vehicle with respect to time using the x, y, z coordinate system.

Public means people or property that are not involved in supporting a licensed launch, and includes those people and property that may be located within the boundary of a launch site, such as visitors, any individual providing goods or services not related to launch processing or flight, and any other launch operator and its personnel. This is a new definition and was added to clarify how the FAA defines the public.

Public area means any area outside a hazard area, and is an area that is not in the possession, ownership or other control of a launch site operator or of a launch site customer who possesses, owns or otherwise controls that hazard area. For purposes of Q–D criteria, the final rules treat any location outside a launch site boundary as a public area for any activity at a launch site. Certain areas within a launch site are also considered public areas for purposes of applying Q–D criteria. For any given launch operator, areas where other launch operators are located are public areas.

Public area distance means the minimum separation distance permitted between a public area and an explosive hazard facility.

Public traffic route distance means the minimum distance permitted between a public highway or railroad line and an explosive hazard facility. This is a new definition. It was necessary to add the definition because explosive division 1.1 explosives were added to the explosive safety requirements. The distance requirements for explosive division 1.1 explosives differentiate between public traffic routes and inhabited buildings, a differentiation not made for explosive division 1.3 explosives.

Trajectory means the position and velocity components as a function of time of a launch vehicle relative to an x, y, z coordinate system, expressed in x, y, z, *x*, *y*, *z*. The *x, y, z* coordinates describe the position of the vehicle both for projecting the proposed flight path and during actual flight. The *x*, *y*, *z* variables describe the velocity of the vehicle.

Unguided sub-orbital launch vehicle means a sub-orbital rocket that does not have a guidance system.

X,Y,Z coordinate system means an orthogonal, Earth-fixed, topocentric, right-handed system. The origin of the coordinate system is at a launch point. The X-axis coincides with the initial launch azimuth and is positive in the downrange direction. The Y-axis is positive to the left looking downrange. The XY-plane is tangent to the ellipsoidal Earth model's surface at the origin and perpendicular to the geodetic vertical. The Z-axis is normal to the XY-plane and positive directed away from the Earth.

ϕ_o,λ_o,$\eta_o$means a latitude, longitude, height system where ϕ_o is the geodetic latitude of a launch point, λ_o is the east longitude of the launch point, and η_o is the height of the launch point above a reference ellipsoid. ϕ_o and λ_o are expressed in degrees-decimal-degrees, which is abbreviated as DDD.

Subpart B contains the criteria and information requirements for obtaining a license to operate a launch site. Section 420.15 specifies the information that an applicant for a launch site operator license must submit as part of its license application. The FAA requires this information to evaluate issues affecting national security and foreign policy, environmental impacts, whether the launch site location could safely be used to conduct launches, explosive site safety, and whether the applicant will operate the launch site safely.

Section 420.15 has been modified slightly from the NPRM. The first and only substantive change is section 420.15(a). It states that an applicant shall identify the name and address of the applicant, and the name, address, and telephone number of any person to whom inquiries and correspondence should be directed. It also requires the applicant to provide the name and location of the proposed launch site, including downrange equipment; and describe the layout of the launch site, including launch points; the types of launch vehicles to be supported at each launch point; the range of launch azimuths planned from each launch point; and the scheduled operational date. The FAA determined that it was necessary to obtain this basic general information from an applicant in order to conduct the licensing process and to review compliance with the requirements of this part. Section 420.15(a) also requires foreign ownership information, as did the Launch Site NPRM's section 420.15(b).

The other changes to section 420.15 are organizational only. Section 420.15(b) contains the environmental review requirements, which replace requirements currently located at sections 417.105–107.

Section 420.15(c) states that an applicant must provide the information necessary for the review of the launch site location. An applicant who is proposing to locate a launch site at an existing launch point at a federal launch range is not required to submit a launch site location review analysis if a launch vehicle of the same type and class as proposed for the launch point has been safely launched from the launch point.

Section 420.15(d) states that an applicant must provide the information necessary for the review of the explosive site plan. If an applicant plans to operate a launch site located on a federal launch range, and if the applicant is required by the federal launch range to comply with the federal launch range's explosive safety requirements, the applicant shall submit the explosive site plan submitted to the federal launch range. The requirement to submit the federal launch range approved explosive site plan is new. The FAA proposed in the Launch Site NPRM that no explosive site plan would have to be submitted. The FAA will not approve the explosive site plan. Rather, the FAA will use it to assess the adequacy of other aspects of an applicant's application, such as the applicant's coordination procedures under section 420.55(a).

Section 420.15(e) requires an applicant to demonstrate how it will satisfy the launch site operation requirements of sections 420.53 through 420.61, and section 420.71. Specifically, a license applicant must show how the applicant proposes to control public access pursuant to section 420.53, how it proposes to comply with the scheduling requirements of section 420.55, and how it proposes to satisfy the notification obligations of section 420.57. The FAA requires this information to ascertain whether an applicant will be able to satisfy the launch site operation performance requirements and for compliance monitoring purposes. With regard to the notification obligations of section 420.57, an applicant must submit its agreements with the U.S. Coast Guard district and the FAA regional air traffic control facility having jurisdiction over the affected airspace to demonstrate satisfaction of the requirements of 420.57(b) and (c). A license applicant must also show how it proposes to comply with the accident investigation requirements of section 420.59, the record requirements of section 420.61, and the requirements governing lightning protection of section 420.71.

Section 420.17 establishes the bases upon which the FAA will make its license determination. This includes the FAA's determination of the adequacy of information provided by the applicant, the conclusions of the environmental and policy reviews, the adequacy of the explosive site plan, and satisfaction of site location requirements. The FAA will notify the applicant of, and allow the applicant to address any deficiencies in the application.

A few changes were made from the NPRM. All were structural, except for section 420.17(a)(2) which now states that one basis for the issuance of a license is that the FAA has completed an analysis of the environmental impacts associated with the proposed operation of the launch site, in accordance with NEPA, 40 CFR Parts 1500–1508, and FAA Order 1050.1D. The NPRM had only stated that the National Environmental Policy Act review must be completed, but the FAA decided that it would be more informative to advise of the full extent of the FAA's review.

Sections 420.19 through 420.29 require an applicant to demonstrate that its proposed launch site location will allow for the safe launch of at least one type of launch vehicle by defining flight corridors or impact dispersion areas and estimating casualty expectancy. The launch site location review remains largely unchanged from the Launch Site NPRM, with a few exceptions, which will be discussed below. The treatment of the launch site location review in this final rule has been enhanced for two reasons. The FAA decided to outline the process more distinctly. Additionally, the FAA decided to clarify what parts of the launch site location review apply to reusable launch vehicles and which do not.

Section 420.19 provides general requirements. To gain approval for a launch site location, an applicant must demonstrate that for each launch point proposed for the launch site, at least one type of expendable or reusable launch vehicle can be flown from the launch point safely. For purposes of the launch site location review, a safe launch must possess a risk level estimated not to exceed an expected average number of 0.00003 casualties (E_c) to the collective member of the public exposed to hazards from the flight ($E_c \leq 30 \times 10^{-6}$).

Types of launch vehicles include orbital expendable launch vehicles, guided sub-orbital expendable launch vehicles, unguided sub-orbital expendable launch vehicles, and reusable launch vehicles. Orbital expendable launch vehicles are further classified by weight class, based on the weight of payload the launch vehicle can place in a 100-nm orbit. If an applicant proposes to have more than one type of launch vehicle flown from a launch point, the applicant must demonstrate that each type of expendable or reusable launch vehicle planned to be flown from the launch point can be flown from the launch point safely. If an applicant proposes to have more than one weight class of orbital expendable launch vehicles flown from a launch point, the applicant must demonstrate that the heaviest weight class planned to be flown from the launch point can be flown from the launch point safely.

The three types of expendable launch vehicles account for the significant distinctions between launch vehicles designed for orbital or sub-orbital flight, and between those with and without guidance systems. Guided orbital expendable launch vehicles typically require an FTS, which means that the greatest risk to the public stems from debris caused by destruction of a vehicle. Guided sub-orbital launch vehicles will be treated similarly to orbital launch vehicles, except for the nominal impact of the final stage. In contrast, current unguided sub-orbital launch vehicles generally have high reliability levels, and therefore create the greatest public risk through nominal stage impact. The launch site location review is designed to account for these differences in public risk.

Section 420.21 provides minimum distance requirements governing the separation of a launch point from a launch site boundary. The distance from any proposed launch point to the closest launch site boundary must be at least as great as the debris dispersion radius of the largest launch vehicle type and weight class proposed for the launch point. For launch sites supporting expendable launch vehicles, an applicant may use the largest distance listed in table 2 for the type and weight class of launch vehicles proposed for the launch point. For launch sites supporting reusable launch vehicles, an applicant must determine the debris dispersion radius that represents the maximum distance from a launch point that debris travels given a worst-case launch vehicle failure in the launch area. An applicant shall clearly and convincingly demonstrate the validity of its proposed radius.

Section 420.23 provides the requirement for applicants to define a flight corridor. The section is divided up into flight corridor requirements for guided orbital expendable launch vehicles, guided sub-orbital expendable launch vehicles, unguided sub-orbital expendable launch vehicles, and reusable launch vehicles. For guided orbital expendable launch vehicles, an applicant must define a flight corridor that encompasses an area that is estimated, in accordance with the requirements of this part, to contain debris with a ballistic coefficient of ≥ 3 pounds per square foot, from any non-nominal flight of a guided orbital expendable launch vehicle from the launch point to a point 5000 nm downrange, or where the IIP leaves the surface of the Earth, whichever is shorter. The IIP for most orbital expendable launch vehicles goes well beyond 5000 nm. The requirement is the same for guided sub-orbital expendable launch vehicles, except that the flight corridor ends with an impact dispersion area for the launch vehicle's last stage where it impacts the Earth's surface. For either type of launch vehicle, the flight corridor includes an overflight exclusion zone where the public risk criteria of $30\times10^{-6}\leq$ would be exceeded if one person were present in the open. An applicant must use one of the methodologies provided in appendix A or B to define a flight corridor. These are discussed below.

Because the FAA realizes that applicants may have other methods to determine a flight corridor, the FAA will approve an alternate method if an applicant provides a clear and convincing demonstration that its proposed method provides an equivalent level of safety to that required by appendix A or B.

Section 420.23(c) addresses unguided sub-orbital expendable launch vehicles. For an unguided sub-orbital expendable launch vehicle, an applicant must define impact dispersion areas that are estimated, in accordance with the requirements of this part, to contain the impact of launch vehicle stages from nominal flight of an unguided sub-orbital expendable launch vehicle from the launch point to impact with the Earth's surface, and an overflight exclusion zone where the public risk criteria of 30×10^{-6} would be exceeded if one person were present in the open. An applicant must follow the methodology provided in appendix D. The FAA will approve an alternate method if an applicant provides a clear and convincing demonstration that its proposed method provides an equivalent level of safety to that required by appendix D.

An important point to note about the launch site location review for unguided sub-orbital launch vehicles is that it is based on the apogee of the unguided suborbital launch vehicle used in the analysis. The apogee used in the analysis must represent the maximum apogee intended to be reached by a launch vehicle launched from the launch point.

Section 420.23(d) addresses reusable launch vehicles. For a reusable launch vehicle, an applicant must define a flight corridor that contains the hazardous debris from nominal and non-nominal flight of a reusable launch vehicle. The applicant must clearly and convincingly demonstrate the validity of the flight corridor.

Section 420.25 provides the requirement for applicants to conduct a risk analysis. If a flight corridor or impact dispersion area contains a populated area, the applicant must estimate the casualty expectation associated with the flight corridor or impact dispersion area. An applicant must use the methodology provided in appendix C to this part for guided orbital or suborbital expendable launch vehicles and appendix D for unguided suborbital launch vehicles. For reusable launch vehicles, the FAA will evaluate the adequacy of an applicant's casualty expectancy analysis on a case-by-case basis. If the estimated expected casualty exceeds 30×10^{-6}, the FAA will not approve the location of the proposed launch point.

Section 420.27 contains the information that an applicant must submit in its application for a launch site location review. The FAA recognizes that not all information is applicable to all analyses.

Section 420.29 contains an important caveat to the launch site location review as discussed so far. The FAA must evaluate the adequacy of a launch site location for unproven launch vehicles on a case-by-case basis. An applicant for a license to operate a launch site for an unproven launch vehicle must provide a clear and convincing demonstration that its proposed launch site location provides an equivalent level of safety to that required by this part. A launch site that is safe for proven launch vehicles may not be safe for new vehicles. The probability of failure is likely to be higher, and the risk to populated areas may increase significantly.

Section 420.31 requires an applicant to complete two agreements necessary for the safety of aircraft and ships during a launch. An applicant must complete an agreement with the local U.S. Coast Guard district to establish procedures for the issuance of a Notice to Mariners prior to a launch and other such measures as the Coast Guard deems necessary to protect public health and safety. An applicant must also complete an agreement with the FAA Air Traffic Control (ATC) office having jurisdiction over the airspace through which launches will take place, to establish procedures for the issuance of a Notice to Airmen prior to a launch and for closing of air routes during the launch window and other such measures as the FAA ATC office deems necessary to protect public health and safety.

If an applicant plans to operate a launch site located on a federal launch range and is using existing federal launch range agreements; the applicant does not have to comply with section 420.31. These agreements are with the U.S. Coast Guard and the FAA ATC office having jurisdiction over the airspace through which launches will take place.

Appendix A

Of the two methods allowing an applicant to demonstrate the existence of a guided expendable launch vehicle flight corridor that satisfies the FAA's risk criteria, appendix A is the simplest of the methods. Appendix A typically offers the more conservative approach in that it produces a larger area for guided orbital and suborbital expendable launch vehicles. In order to achieve the simplicity this approach offers, the FAA based certain decisions regarding the methodology on a series of what it intends as conservative assumptions and on hazard areas previously developed by the federal

launch ranges for the guided expendable launch vehicles listed in table 1 of section 420.19.

The greater simplicity of the approach derives from the fact that, unlike the method of appendix B, an applicant need obtain no meteorological data and need not plot the trajectory of a particular launch vehicle. Instead, recognizing that a typical flight corridor consists of a series of fans of decreasing angle extending out from a launch point, appendix A employs a variation on that typical corridor.

The appendix A flight corridor estimation contains a number of elements, each of which an applicant must define for each of its proposed launch points. An appendix A flight corridor consists of a circular area around a selected launch point, an overflight exclusion zone, a launch area and a downrange area. A flight corridor for a guided orbital expendable launch vehicle ends 5,000 nautical miles from the launch point, and, for a guided suborbital expendable launch vehicle, the flight corridor ends with the impact dispersion area of the launch vehicle's final stage.

Once an applicant has produced an appendix A flight corridor, the applicant must ascertain whether the flight corridor contains population, and, if so, whether the use of the corridor would present unacceptable risk to that population. If no members of the public reside within the corridor, the FAA will approve the proposed location of the site.[9] If the flight corridor is populated, the FAA will require an applicant to perform a risk analysis in accordance with appendix C. If the proposed corridor satisfies the FAA's risk criteria, the FAA will approve the location of the site. If, however, the proposed corridor fails to satisfy the FAA's risk criteria, an applicant has certain options. The applicant may attempt another appendix A flight corridor by selecting a different flight azimuth or by selecting a different launch point at the proposed launch site, or by selecting a different launch vehicle type or class. Or, the applicant may, using the more accurate but more complicated calculations of appendix B, narrow its flight corridor and determine whether that flight corridor satisfies the FAA's risk criteria.

To create a hypothetical flight corridor under appendix A an applicant must first determine from where on the launch site a guided expendable launch vehicle would take flight. That position is defined as a launch point. An applicant must determine the geodetic latitude and longitude of each launch point that it proposes to offer for launch, and select a flight azimuth for each launch point. An applicant should know whether it plans to offer the site for the launch of guided orbital or sub-orbital expendable launch vehicles. If planning for the launch of guided orbital expendable launch vehicles, the applicant must decide what expendable launch vehicle class, as described by payload weight in section 420.19, table 1, best represents the largest expendable launch vehicle class the launch site would support.

Once an applicant has made the necessary decisions regarding location and vehicle class, the next step in creating an appendix A flight corridor is to look up the maximum distance (D_{max}) that debris is expected to travel from a launch point if a worst-case expendable launch vehicle failure were to occur and flight termination action destroyed the expendable launch vehicle at 10 seconds into flight. D_{max} serves as a radius that defines a circular area around the launch point. The FAA has estimated, on the basis of federal launch range experience, the D_{max} for a guided suborbital expendable launch vehicle and for each guided orbital expendable launch vehicle class and provided the results that an applicant should employ in table A–1, appendix A.

The circular area, defined by D_{max}, is part of an overflight exclusion zone. An overflight exclusion zone in an appendix A flight corridor consists of a rectangular area of the length prescribed by table A–2, capped up-range by a semi-circle with radius D_{max} centered on the launch point. Its downrange boundary is defined by an identical semi-circular arc with a radius D_{max} centered on the endpoint prescribed by table A–2. The crossrange boundaries consist of two lines parallel to and to either side of the flight azimuth. Each line is tangent to the uprange and downrange D_{max} circles as shown in appendix A, figure A–1.

An appendix A flight corridor also contains a launch area. The launch area extends from the uprange boundary, which is coextensive with the circle created by the radius D_{max}, to a line drawn perpendicular to the flight azimuth one hundred nautical miles down range of the launch point. The launch area's crossrange boundaries are a function of the lengths of two lines perpendicular to the flight azimuth: one drawn ten nautical miles down range from the launch point and the other line drawn one hundred nautical miles down range from the launch point. Table A–3 provides the lengths of the line segments.

Adjacent to the launch area is the downrange area. For purposes of appendix A, a corridor's downrange area extends from the one hundred nautical miles line to a line, perpendicular to the flight azimuth, that is 5,000 nautical miles downrange from the launch point for the guided orbital expendable launch vehicle classes, and to an impact dispersion area for a guided suborbital expendable launch vehicle corridor. The down range area's crossrange boundaries connect the prescribed endpoints of the perpendicular lines at one hundred nautical miles and 5,000 nautical miles. Table A–3 provides the lengths of the line segments.

An applicant must determine whether the public resides within this flight corridor. If no populated areas exist, an applicant may submit its analysis for the FAA's launch site location review. If there is population located within the flight corridor, the applicant must calculate the risk to the public in accordance with the requirements of appendix C. The expected casualty (E_c) result for the flight corridor must not exceed $30 \times 10_{-6}$ for the applicant to satisfy the location requirements.

Map Requirements and Plotting Methods

To describe a flight corridor and any populated areas within that corridor, an applicant must observe data and methodology requirements for mapping a flight corridor and analyzing populations. These requirements apply to all appendices.

The FAA requires certain geographical data for use in describing flight corridors for each appendix. The geographical data must include the latitude and longitude of each proposed launch point at a launch site, and all populated areas in a flight corridor. The accuracy requirement for the launch area portion of the analyses calls for map scales of no smaller than 1:250,000 inches per inch. The actual map scale will depend on the smallest census block group size in a launch area. The FAA bases its scale requirement on average range rates in the launch area, because range rates have a direct impact on dwell times over populated areas. While in the launch area of a flight corridor, the instantaneous impact point (IIP) ground trace tends to linger over any populated areas, which increases the E_c for an individual populated area. The map scale required by the FAA is large enough to allow an applicant to

[9] An applicant must still obtain written agreements with the FAA Air Traffic Control office having jurisdiction over the airspace where launches will take place and, if appropriate, with the U.S. Coast Guard regarding procedures for coordinating launches with the launch site.

determine the dwell time and size for each applicable populated area.

Using a similar approach, the FAA establishes an accuracy requirement for the downrange area of a flight corridor. A map scale may be no smaller than 1:20,000,000 inches per inch. The scale is to be smaller than that required for the launch area because the dwell times over downrange populated areas are small and the map scale must only be large enough to allow an applicant to determine the dwell time and the size of each populated area downrange. Maps satisfying these accuracy requirements are readily available. For example, civil aeronautical charts are published and distributed by the U.S. Department of Commerce, National Oceanic and Atmospheric Administration (NOAA), and are also published by the Defense Mapping Agency and distributed by NOAA.

Besides scale, appendices A, B, C and D require an applicant to use cylindrical, conic, and plane map projections. The FAA uses these map projections for the analyses because they produce only small error with straight line measurements.

Scale requirements, geographic location of the launch site, and plotting method are the main considerations for choosing a map projection. Of these considerations, the plotting method selected for development and depiction of the flight corridor line segments is the most important. Three plotting methods are provided by appendix A.

The ''mechanical method'' is the least complex, least costly, but also the least accurate of the methods suggested here. The ''semi-automated method'' provides more accurate techniques for determining the endpoint coordinates of each flight corridor line segment. The fully automated method makes use of geographic information system (GIS) software with global mapping data.

Appendix A provides an applicant with equations to perform range and bearing computations for the purpose of plotting a flight corridor on a map. The range and bearing from a launch point are used to determine the latitude and longitude coordinates of a point on the flight corridor. Range and bearing equations are standard geodesic computations, which can be found in most geodesy textbooks.

An applicant may create line segments to describe a flight corridor by using range and bearings from the launch point along various azimuths. Appendix A provides equations to calculate geodetic latitude (+N) and longitude (+E) given the launch point geodetic latitude (+N), longitude (+E), range (nm), and bearing (degrees, positive clockwise from North). The same equations may also be used to calculate an impact dispersion area by substituting a final stage impact point for the launch point. Appendix A also provides equations to calculate the distance of a geodesic between two points.

As noted above, an alternative to range and bearing computations is to use geographic information system (GIS) software with global mapping data. GIS software is an effective tool for constructing and evaluating a flight corridor, and has the advantage of allowing an applicant to create maps of varying scales in the launch and downrange areas. Commercially available GIS products are acceptable to the FAA for use in appendices A, B, C and D if they meet the map and plotting method requirements of paragraph (b) of appendix A. An applicant should note, however, that maps of different scales in GIS software may not match each other. For instance, the coastline of Florida on a U.S. map may not match the coastline on a world map. Applicants shall resolve such contradictions by referring to more accurate maps such as NOAA maps.

Once an applicant has selected a map for displaying a flight corridor's launch area, the line segment lengths may be scaled to the chosen map. Map scale units are actual distance units measured along the Earth's surface per unit of map distance. Most map scale units are given in terms of inches per inch (in/in). An applicant converts appendix A flight corridor line segment distances to the map scale distance by dividing the launch area flight corridor line segment length (inches) by the map scale (in/in). If, for example, an applicant selected a map scale of 250,000 in/in and the line segment for the launch area flight corridor was 1677008 inches, the equivalent scaled length of the line segment for constructing an appendix A launch area is (1677008/250,000) = 6.7 inches of map distance. An applicant would then plot the line segment on the map for display purposes using the scaled line segment length of 6.7 inches. If an applicant were to choose a map with scale units other than inches per inch, the FAA requires a description of the conversion algorithm to inches per inch and sample computations. Also note that the FAA will accept straight lines for distances less than or equal to 7.5 times the map scale on map scales greater than or equal to 1:1,000,000 inches per inch; or straight lines representing 100 nm or less on map scales less than 1:1,000,000 in/in.

Weight Classes for Guided Orbital Expendable Launch Vehicles

Appendix A distinguishes between the guided orbital expendable launch vehicles represented in the appendix on the basis of four separate weight class. These are used to determine the size of the debris dispersion radius around a launch point, and the size of an appendix A flight corridor. The FAA selected the four expendable launch vehicle classes based on the size and characteristics of expendable launch vehicles that currently exist in the U.S. commercial inventory and that should approximate any proposed new expendable launch vehicle as well. An applicant planning to support the launch of guided orbital expendable launch vehicles must choose the largest expendable launch vehicle class anticipated for launch from the chosen launch point. This maximizes the area of the flight corridor. Also, selection of the largest class anticipated lessens the possibility of having to obtain a license modification to accommodate a larger customer than an application may have originally encompassed.

A 100-nm orbit is the standard for inter-class launch vehicle comparison purposes. It is a standard reference orbit used by launch vehicle manufacturers for descriptive purposes and allows the uniform comparison of launch vehicle throw weight capability. The FAA obtained the payload weights for the 28° and 90° orbital inclinations from the ''International Reference Guide to Space Launch Systems,'' S. J. Isakowitz, 2d ed. (1995). They represent capabilities from CCAS and VAFB, respectively.

D_{max} Circle

A radius, maximum distance (D_{max}), is employed to define a circular area about a launch point. The circular area indicates the limits for both flight control and explosive containment following a worst-case expendable launch vehicle failure and flight termination system activation at 10 seconds into flight. The worst-case failure represents a failure response, immediately following first motion, which causes the launch vehicle to fly in the uprange direction on a trajectory that maximizes the impact range. The ten second flight time represents a conservative estimate of the earliest elapsed time after launch that a flight safety officer would be able to detect the malfunction, initiate flight termination action, and actuate the flight termination system on the expendable launch vehicle. The radius is the estimated D_{max} from the launch point that inert debris is expected to travel

and beyond which the overpressure from explosive debris is not expected to exceed 0.5 pounds per square inch (psi). D_{max} accounts for the public risk posed by the greater of the wind-induced impact distance of a hazardous piece of inert debris, or the sum of the wind-induced impact distance of an explosive piece of debris and the debris' 0.5 psi overpressure radius from the explosion.

Overflight Exclusion Zone

Table A–2 and figure A–1 define an overflight exclusion zone. Because of the risks the early stages of flight create, the FAA requires an applicant to demonstrate that the public will not be present in this area during a launch. An overflight exclusion zone is an area in close proximity to a launch point where the mission risk is greater than an E_c of 30×10^{-6} if one member of the public is present in the open.

Early in the flight phase expendable launch vehicles have large explosive potential, a low IIP range rate, and an historically higher probability of failure relative to the rest of pre-orbital flight. The relatively simple risk estimation analysis defined by appendix C does not adequately model the true risk during this stage of flight, and does not serve as the basis for determining that the overflight exclusion zone represents an area where the FAA's risk threshold is not satisfied. Instead, the FAA derived the overflight exclusion zone using a high fidelity risk assessment computer program in use by the national ranges. The program is a launch area risk analysis program called DAMP (facility DAMage and Personal injury). DAMP relies on information about a launch vehicle, its trajectory and failure responses, and facilities and populations in the launch area to estimate hit probabilities and casualty expectation. The hazards analyzed by DAMP include impacting inert debris, and blast overpressures and debris projected from impact explosions.

Risk assessments were also conducted for the time of flight immediately after the first major staging event. The results showed a significant decrease in the E_c estimates, and those estimates were within the E_c criteria of 30×10^{-6}. The decrease results from a combination of decreasing dwell times and a significant reduction in the size of an effective casualty area following a major staging event.

The FAA requires that an applicant demonstrate either that the overflight exclusion zone is unpopulated, that there are times when no one is present, or that the public can be excluded from this area during launch. Although a determination of this nature encompasses issues that will be addressed in a launch license, a launch site cannot support safe launches unless overflight of the highest risk area in close proximity to a launch point takes place without the public present.

An applicant must display an overflight exclusion zone on maps in accordance with the requirements of paragraph (b) of appendix A.

Launch Area

As noted at the beginning of this discussion, appendix A employs a series of fans as the shape of the foundation of its flight corridor. The flight corridor fans account for the turning capabilities and wind dispersed debris of a guided expendable launch vehicle. The launch area fans have been divided into two regions, of 60 and 30 degrees, representing the malfunction turn capability of the launch vehicle relative to its velocity in the downrange direction. Each region is represented by the estimated maximum turning capability over a ground-range interval. These angles are the FAA's estimates for the maximum angles that the launch vehicle velocity vector may turn within a five second time period.

The initial fan area is described by a 60° half angle extending ten nautical miles downrange from a launch point. The ten nautical mile threshold represents the FAA's estimate of where a vehicle's maximum turning rate capability is reduced to approximately 30 degrees due to increasing velocity in the downrange direction. A 30° half angle was used to define the secondary fan area beginning 10 nautical mile downrange and ending 100 nautical mile downrange. Once an expendable launch vehicle IIP has reached the 100 nautical mile downrange point, the increasing velocity in the downrange direction continues to reduce the launch vehicle's ability to maneuver through a large malfunction turn.

A 100 nautical mile distance is used as a delimiter between the launch area and the downrange area. From the launch point out to approximately the point where the IIP is 100 nautical miles downrange, most expendable launch vehicles will be subjected to the aerodynamic forces of wind and drag. Once an expendable launch vehicle's IIP has cleared the 100 nm limit, the FAA is willing to assume for purposes of appendix A that most launch vehicles are outside the atmosphere.

Downrange Area

The FAA derived the appendix A flight corridor's downrange area from hazard areas previously developed by federal launch ranges for the weight classes of expendable launch vehicles defined in table 1 of section 420.19. The downrange fan area of the flight corridor is based on turning capabilities and impact dispersions of guided expendable launch vehicles. The size of the fan area is necessary for containing expendable launch vehicle debris in the event that an expendable launch vehicle failure initiates a maximum-rate malfunction turn and the flight termination system must be activated. In the later stages of flight a guided expendable launch vehicle's turn capability is reduced due to increasing velocities in the downrange direction. Therefore, a 10° half angle was used to define the downrange area, which reflects a combination of normal vehicle dispersions and malfunction turns.

The downrange area of a flight corridor begins 100 nm from a launch point and, for the guided orbital expendable launch vehicle weight classes, extends 5,000 nm downrange from the launch point. Overflight dwell times for the flight time remaining after 5,000 nm typically result in an insignificant increase in risk to the public. In general, after an orbital expendable launch vehicle IIP has passed the 5,000 nm point its IIP range rates increase very rapidly as the expendable launch vehicle approaches orbital insertion. As a result, the dwell times decrease significantly, reducing the overflight risk to insignificant levels. For an applicant employing a guided suborbital expendable launch vehicle, a flight corridor ends with the impact dispersion area of a final stage.

Appendix B

Appendix B provides another means for creating a hypothetical flight corridor from an applicant's proposed launch site. As with a flight corridor created pursuant to appendix A, an appendix B corridor identifies the populations, those within the defined flight corridor, that must be analyzed for risk. An appendix B analysis offers an applicant a means to demonstrate whether a flight corridor from its launch site satisfies the FAA's risk criteria for a guided orbital or suborbital expendable launch vehicle. Appendix B allows an applicant to perform a more individualized containment analysis rather than relying on the more conservative estimates the FAA derived for appendix A. Because an appendix B analysis uses actual meteorological data and a trajectory, whether actual or computer simulated, of a real expendable launch vehicle, it produces a flight corridor of greater accuracy than one created in accordance with appendix A. The FAA derived the

assumptions and simplifications in the appendix B analysis from expendable launch vehicle data representing historical expendable launch vehicle malfunction behavior.

A flight corridor created using appendix B contains, on its face, the same elements as an appendix A flight corridor, including a circular area around a launch point with a radius of D_{max}, an overflight exclusion zone, a launch area and a downrange area. Appendix B, however, produces and configures the last two elements differently than appendix A. The launch area of an appendix B flight corridor shows where launch vehicle debris would impact in the event of a vehicle failure, and takes into account local meteorological conditions. The downrange area of a flight corridor also shows where launch vehicle debris would impact given a vehicle failure, but takes into account vehicle imparted velocity, malfunctions turns, and vehicle guidance and performance dispersions. Also, like an appendix A flight corridor, the uprange portion of the flight corridor is described by a semi-circle arc that is a portion of either the most uprange dispersion circle, or the overflight exclusion zone, whichever is further uprange.

The appendix B launch area analysis assumes a vehicle failure and destruction at one second intervals along a trajectory z value, which denotes height as measured from the launch point, up to 50,000 feet. An applicant must determine the maximum distance a hazardous piece of debris would travel under local meteorological conditions. The distances that the debris travels provide the boundaries of an appendix B flight corridor's launch area. After a height of 50,000 feet, which is where the FAA estimates, for purposes of this analysis, that debris created by an expendable launch vehicle's destruction has less exposure to atmospheric forces, an applicant shall determine how far harmful debris created by destruction of an expendable launch vehicle would travel based only on malfunction imparted velocity and vehicle dispersion in order to create a downrange area. Although the effects of wind above 50,000 feet are not, in reality, non-existent, once an expendable launch vehicle reaches an altitude of 50,000 feet its velocity vector has pitched down range so that a malfunction turn and explosion velocity, rather than atmospheric drag and wind effects, play the dominant role in determining the dispersion of debris as the debris falls to the surface.

D_{max} Circle

As with an appendix A flight corridor, an applicant must select each launch point at its proposed launch site from which it expects a guided expendable launch vehicle to take flight. An applicant must obtain the latitude and longitude of the launch point to four decimal places. If relying on a guided orbital expendable launch vehicle, the applicant must also select an expendable launch vehicle weight class from section 420.19, table 1, that best represents the largest class each proposed launch point would support. With this information, the applicant then ascertains the D_{max} that debris is expected to travel from a launch point if a mishap were to occur in the first 10 seconds of flight by employing table A–1, appendix A. Table A–1 also provides a maximum distance for guided sub-orbital expendable launch vehicles. The D_{max} distance provided by table A–1 defines a circular area around the launch point.

Overflight Exclusion Zone

That circular area is part of an overflight exclusion zone. Again, an applicant uses information from appendix A to create an overflight exclusion zone. An overflight exclusion zone consists of the circular area defined by the radius D_{max} at the launch point and a corridor of the length prescribed by table A–2. Its downrange boundary is defined by an arc with a radius D_{max} centered on the endpoint prescribed by table A–2. The crossrange boundaries consist of two lines parallel to and to either side of the flight azimuth. Each line is tangent to the uprange and downrange D_{max} circles as shown in appendix A, figure A–1. Creation of an overflight exclusion zone is predetermined by the requirements of appendix A and does not require a trajectory for an actual launch vehicle. As with an appendix A overflight exclusion zone, and for the reasons described in this notice's discussion of appendix A, the FAA requires that the public be excluded from this area during launch.

Launch Vehicle Trajectory

An applicant must also obtain or generate a launch vehicle trajectory. The applicant may use either commercially available software or a trajectory provided by the launch vehicle's manufacturer. Because appendix B is based on equations of motion in three dimensions, the appendix B analysis requires that the trajectory be described using a three axis coordinate system. The FAA recommends that an applicant use a WGS–84 ellipsoidal Earth model [10] as the trajectory coordinate system reference ellipsoid in the appendices, because of its wide availability and its development in accordance with military standards and requirements. The WGS–84 model reflects the most current and the most accurate Department of Defense standards for Earth models. WGS–84 provides a basic reference frame and geometric figure for the Earth and provides a means for relating positions on various local geodetic coordinate systems, including x,y,z, to an Earth-centered, Earth-fixed coordinate system such as the EFG system employed in the appendix B analysis.

The FAA requires time intervals used in the trajectory analysis of no greater than one second for both launch and downrange areas. Data frequency of one second is a compromise between the low data frequency requirements of the launch area, where dwell times are relatively long, and the high frequency requirements of the downrange area, where dwell times are correspondingly shorter. Accordingly, one second time intervals are sufficient to accommodate linear interpolation between trajectory time points, in the launch and downrange areas, and not degrade the accuracy requirements of the analysis.

In the launch area, an applicant's trajectory must include position data in terms of time after liftoff in right-handed x,y,z coordinates centered on the proposed launch point, with the X-axis aligned with the flight azimuth. In the downrange area, the applicant's trajectory must show state vector data in terms of time after liftoff in right-handed x, y, z x, y, z, coordinates, centered on the proposed launch point, with the X-axis aligned with the flight azimuth.

Launch Area

A launch area contains a launch point and an overflight exclusion zone, and constitutes the part of the flight corridor calculated using the effects of atmospheric drag forces on debris produced by a series of hypothetical destructions of an expendable launch vehicle at one second intervals along that trajectory. For purposes of an appendix B analysis, a launch area extends from the further uprange of an OEZ arc or dispersion circle arc downrange to a point on the surface of the Earth that corresponds to the debris impact locations, assuming a failure of the vehicle in flight at a height of 50,000 feet. Typically, federal launch ranges account for five major parameters to

[10] Department of Defense World Geodetic System, Military Standard 2401 (Jan. 11, 1994).

estimate the size of a flight corridor. These include the effects of vehicle-imparted velocity on debris, the change in launch vehicle position and velocity due to a malfunction turn, guidance errors, the ballistic coefficient of debris, and wind. However, imparted velocity, malfunction turn, and trajectory dispersion, although not insignificant, do not play as great a role early in flight as the wind effects on debris. The wind effect on debris, in turn, depends on the ballistic coefficient of the debris. The FAA determined that for purposes of the launch area, of these parameters, launch vehicle debris and meteorological conditions constitute the most significant, and the FAA therefore focuses on these two factors in the launch area.[11]

The FAA requires an applicant to calculate circles that approximate the debris dispersion for each one second time point on a launch vehicle trajectory. The crossrange lines tangent to those circles provide the borders of a launch area. Calculating the circles consists, in general terms, of a two step process. An applicant must first define 15 mean geometric height intervals along the proposed trajectory in order to obtain data, in accordance with subparagraph (c)(4) of appendix B, accounting for the mean atmospheric density, maximum wind speed, fall times and debris dispersions in each of those height intervals. An applicant must then use that data in the calculations in subparagraph (c)(5) to derive the radius applicable to each height interval (z_i). Having obtained that radius, an applicant uses it to describe, pursuant to subparagraph (c)(6), a circle referred to as a debris dispersion circle (D_i), around each one second time interval along the vehicle's trajectory, starting at the launch point. An applicant will then ascertain the crossrange boundaries of a flight corridor's launch area by drawing lines that are tangent to all dispersion circles. The final D_i dispersion circle forms the downrange boundary of a flight corridor's launch area.

The launch area represents the effects of meteorological conditions on how far inert debris with a ballistic coefficient of 3 lb/ft.^{2} would travel. Debris comes in many sizes and shapes, but the FAA does not propose to require an applicant's location review analysis to take all such possibilities into account. A complete analysis for an actual launch entails the determination of the type and size of debris created by each credible failure mode, and the velocity imparted to each piece of debris due to the failure. Instead, for purposes of the appendix B analysis, the FAA categorizes launch vehicle debris by a ballistic coefficient that accounts for the smallest inert debris that may cause harm and that also accounts for the debris most sensitive to wind. A ballistic coefficient reflects the sensitivity of weight and area ratios to drag forces, such as wind dispersion effect.

In addition to knowing what debris is of concern, an applicant must know the local meteorological conditions. The FAA requires an applicant to obtain meteorological data for 15 height intervals in a launch area up to 50,000 feet. Appendix B has an upper limit of 50,000 feet in the launch area containment analysis of debris because winds above this altitude contribute little to drift distance. As noted above, once an expendable launch vehicle reaches an altitude of 50,000 feet its velocity vector has pitched down range so that a malfunction turn and explosion velocity, rather than atmospheric drag and wind effects, play the dominant role in determining the dispersion of debris as the debris falls to the surface. The combination of these two factors significantly reduces the effect of winds on uprange and crossrange dispersion after an expendable launch vehicle reaches 50,000 feet. For altitudes less than 50,000 feet, at the same time as low ballistic coefficient debris pieces are highly sensitive to drag forces, the velocity of an explosion caused by destroying an expendable launch vehicle contributes relatively little to the dispersion effect because the drag produced on these light weight pieces results in a high deceleration so they achieve terminal velocity almost instantaneously and drift with the wind. Therefore, launch vehicle induced explosion-velocities are not considered for the launch area of an appendix B containment analysis. Instead, an applicant uses local statistical wind data by altitude for fifteen height intervals. The data must include altitude, atmospheric density, mean East/West meridianal (u) and North/South zonal wind (v), the standard deviation of u and v wind, a correlation coefficient, the number of observations and the wind percentile.

Data acceptable to the FAA is available from NOAA's National Climatic Data Center (NCDC). NOAA Data Centers, of which the NCDC is the largest, provide long-term preservation of, management, and ready accessibility to environmental data. The Centers are part of the National Environmental Satellite, Data and Information Service. The NCDC data set acceptable to the FAA is the ''Global Gridded Upper Air Statistics, 1980—1995, V1.1, March 1996 (CD–ROM).'' The Global Gridded Upper Air Statistics (GGUAS) CD–ROM data set describes the atmosphere for each month of the represented year on a 2.5 degree global grid at 15 standard pressure levels. NCDC provides compiled mean and standard deviation values for sea level pressure, wind speed, air temperature, dew point, height and density. GGUAS also complies eight-point wind roses. The spatial resolution is a 73 x 144 grid spaced at 2.5 degrees and the temporal resolution is one month.

To simplify the containment analysis, an applicant may use a mean wind of 50%. An applicant may also assume that an applicant's launch pad height is equal to the surface level of the wind measurements provided by the NCDC database. The actual pad height could be lower or higher than the surface level wind measurement height. The difference between the actual pad height and the surface level measurement height is considered insignificant in terms of its effect on the impact dispersion radius.

The FAA notes that the NCDC database will not necessarily contain measurements of winds for any particular launch site proposed. If a launch point is located in the center of a 2.5 degree NCDC weather grid cell, the farthest distance to a grid cell corner would be along a diagonal from the center of the grid cell to a corner of the grid cell. The wind measurements will be no more than approximately 106 nm from the launch point. This distance is close enough for purposes of a location review containment analysis, and occurs only for a grid located on the equator. In general, the topography within approximately 106 nm of a launch point is assumed to be relatively similar with respect to height above mean-sea-level. As the launch point latitude increases the distance from the wind measurement grid point will decrease, which will reduce errors introduced by this assumption.

Having obtained the necessary meteorological data, an applicant would use data from the GGUAS CD–ROM to estimate the mean atmospheric density, maximum wind speed, height interval fall times, and height interval debris dispersions for 15 mean geometric height intervals. Altitude intervals are denoted by the subscript ''j''. An applicant would then calculate the debris dispersion radius (D_i) for each trajectory position whose ''Z'' values,

[11] Note that the determination of the size of D_{max} included considerations of malfunction turns as well.

are less than 50,000 ft. Each trajectory time considered is denoted by the variable subscript ''i''. The initial value of ''i'' is one and the value is increased by increments of one for each subsequent ''Z'' value evaluated. The major dispersion factors are a combination of wind velocity and debris fall time. Because the atmospheric density is a function of altitude and affects the resultant fall time, D_i is estimated by summing the radial dispersions computed for each altitude interval the debris intersects on its descent trajectory. Once all the debris dispersion radii have been calculated, the flight corridor's launch area is produced by plotting each debris dispersion circle on a map, and drawing enveloping lines that enclose the outer boundary of the debris dispersion circles. The uprange portion of the flight corridor is described by a semi-circle arc that is a portion of either the most uprange D_i dispersion circle, or the overflight exclusion zone, whichever is further uprange.[12] The enveloping lines that enclose the final D_i dispersion circle forms the downrange boundary of a flight corridor's launch area.

[12] Note that even if a dispersion circle is further uprange than the overflight exclusion zone, the overflight exclusion zone remains the same. That is, it is not extended uprange.

Downrange Area Containment Analysis

A containment analysis also describes the dimensions of a flight corridor's downrange area. The FAA designed the downrange area analysis to accommodate expendable launch vehicle imparted velocity, malfunction turns, and vehicle guidance and performance dispersions. The analysis to obtain the downrange area of a flight corridor for guided orbital and suborbital expendable launch vehicle trajectories starts with trajectory positions with heights greater than 50,000 feet, that is, the point where the launch area analysis ends. A downrange area for a guided orbital expendable launch vehicle ends 5,000 nautical miles from the launch point, or where the IIP leaves the surface of the earth, whichever is shorter. If an applicant has chosen a guided suborbital expendable launch vehicle for the analysis, the analysis must define the impact dispersion area for the final stage, and that impact dispersion area marks the end of a downrange area.

An applicant computes the crossrange boundaries of the downrange area of a flight corridor by calculating the expendable launch vehicle position after a simulated worst-case four second turn, rotating the launch vehicle state vector to account for vehicle guidance and performance dispersions, and then computing an instantaneous impact point. The locus of IIPs describes the impact boundary.

As a first step, an applicant computes a reduction ratio factor that decreases with increasing launch vehicle range. Secondly, an applicant computes the launch vehicle position after a simulated worst-case four-second malfunction turn for each altitude interval along a trajectory. For purposes of the launch site location review, the FAA relies on a velocity vector malfunction turn angle initially set at 45°. This turn angle is decreased, using a reduction ratio factor, as a function of downrange distance to simulate the constraining effects of increasing velocity in the downrange direction on malfunction turn capability. See figure B–2. The FAA assumes this worst-case delay (4 seconds) result in order to account for the maximum dispersion of the vehicle during the time necessary for a person in charge of destroying a launch vehicle to detect a vehicle failure and cause the vehicle's destruction. Figure B–2 in appendix B depicts the velocity vector movement in the yaw plane of the vehicle body axis coordinate system. Figure 1 below depicts the state vector axes and impact locations for a malfunction turn failure and for an on-trajectory failure.[13]

[13] For clarity, the flight azimuth in the figure is not aligned with the x-axis, as would be the case in the launch site location review.

Figure 1
State Vector Axes and Impact Locations for a Malfunction Turn Failure[13]

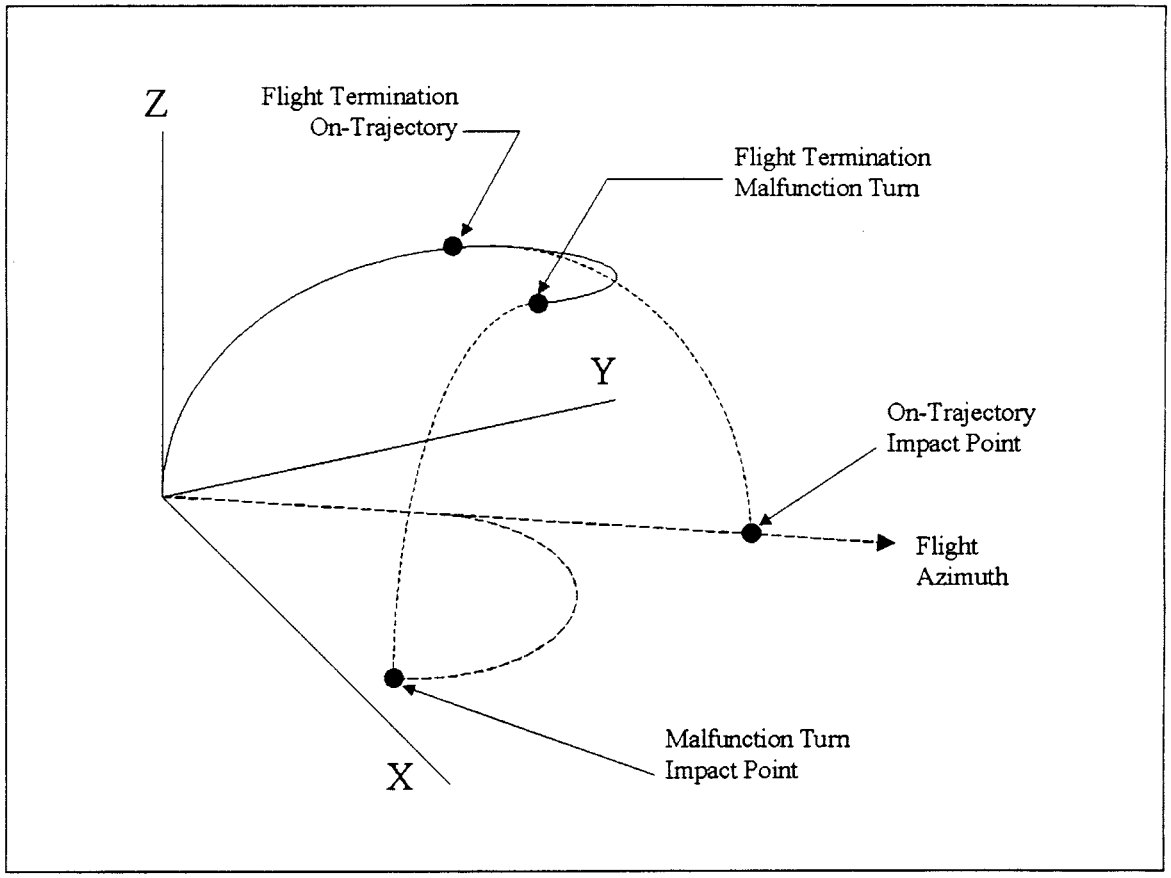

The second step described above assumes perfect performance of the launch vehicle up until the beginning of the malfunction turn. In order, however, to account for normal three sigma (3σ) performance and guidance dispersions of the launch vehicle prior to the malfunction turn, the applicant next rotates the trajectory state vector. The trajectory state-vector rotation is accomplished in conjunction with an XYZ to ENU coordinate system transformation. This transformation rotates the X and Y axes about the Z axis. The Z and U axes are coincident. Both position and velocity components are rotated. The FAA intends the trajectory azimuth rotation to account for the normal 3-sigma launch vehicle performance and guidance dispersions that may exist at the beginning of a malfunction turn. The rotation angle decreases from three degrees to one degree as the vehicle proceeds downrange, and the rate of decrease is a function of distance from the launch point. This is done because the trajectory azimuth of an expendable launch vehicle with 3-sigma performance and guidance dispersions early in flight could be approximately ±3 degrees from the nominal flight azimuth. Since this azimuth offset is not considered a failure response, the guidance, navigation, and control system is expected to achieve steering corrections. These corrections will eventually reduce the angular offset later in flight as the launch vehicle targets the mission objectives for orbital insertion. If an expendable launch vehicle has 3-sigma performance and guidance dispersions later in flight, the effects of increasing velocity in the downrange direction limits an expendable launch vehicle's capability to alter the trajectory's azimuth. Launch vehicles in the four expendable launch vehicle weight classes were reviewed to determine the typical range of malfunction-turning rates in the downrange area. The FAA found these rates to be relatively small compared to launch area rates. The FAA uses the three and one degree turn rates because they encompass the turn rates found during the review process.

Before initiating the IIP computations, an applicant must transform the ENU coordinate system to an EFG coordinate system. This EFG coordinate transformation is employed to simplify the IIP computation.

The IIP computations proposed in appendix B are used for determining the IIPs to either side of a trajectory by creating latitude and longitude pairs for the left and right flight corridor boundaries. Connecting the latitude and longitude pairs describes the boundary of the downrange area of a flight corridor. The launch site location review IIP calculations assume the absence of atmospheric drag effects. Equations B46–B69 implement an iterative solution to the problem of determining an impact point. This iterative technique includes checks for conditions that will not result in impact point solutions. The conditions prohibiting impact solutions are: (1) An initial launch vehicle position below the Earth's surface, (2) a trajectory orbit that is not elliptical, but, parabolic or hyperbolic, (3) a positive perigee height, where the trajectory orbit does not intersect the Earth, and (4) the iterative solution does not converge. Any one of the conditions given above will prohibit

the computation of an impact point. The iterative approach of equations B46–B69 solves these problems.

Estimating Public Risk

Upon completing a flight corridor, an applicant must estimate the risk to the public within the flight corridor to determine whether that risk falls within acceptable levels. If an applicant demonstrates that no part of the flight corridor is over a populated area, the flight corridor satisfies the FAA's risk thresholds, and an applicant's application may rely on its appendix B analysis. If a flight corridor includes a populated area, an applicant has the option of rotating an appendix B flight corridor using a different launch point or azimuth to avoid population, or of conducting an overflight risk analysis in accordance with appendix C.

Appendix C

Under a launch site location review, once an applicant has created a flight corridor employing either appendix A or B, the applicant must ascertain whether there is population within the flight corridor. If there is no population, the FAA will approve the location of the proposed launch point for the type and weight class of expendable launch vehicle analyzed. If there is population, an applicant must employ appendix C to perform an overflight risk analysis for the corridor. An appendix C risk analysis determines whether or not the risk to the public from a hypothetical launch exceeds the FAA's risk threshold of an estimated expected casualty (E_c) of no more than 30×10^{-6} per launch. The purpose of the E_c analysis as part of the launch site location review is not to determine a value of E_c but rather to confidently demonstrate that E_c is less than the acceptable threshold value.

An appendix C risk analysis estimates the E_c overflight contribution from a single hypothetical launch whose flight termination system is assumed to work perfectly. The analysis takes into account the probability of a vehicle failing throughout its trajectory, dwell times [14] over individual populated areas, and the probability of impact within those areas. The analysis also takes into account the effective casualty area of a vehicle class, the size of the populated area, and the population density of the exposed population.

Estimating E_c for an actual launch takes a large number of variables and considerations into account. The risk analysis provided in appendix C provides a somewhat simpler approach to estimating E_c within the boundaries of a flight corridor than might be necessary in performing a risk analysis for an actual launch. For purposes of determining the acceptability of a launch site's location, the FAA relies only on variables relevant to ensuring that the site itself offers at least one flight corridor sufficiently isolated from population for safety. Accordingly, many of the factors that a launch operator will take into account will not be reflected here.

In brief, in order for an applicant to perform an appendix C risk analysis, the applicant must first determine whether any populated areas are present within an appendix A or B flight corridor. If so, the applicant must obtain area and population data. At this point an applicant has a choice. Appendix C requires that an applicant calculate the probability of impact for each populated area, and then determine an E_c value for each populated area. To obtain the estimated E_c for an entire flight corridor, the applicant adds—or sums—the E_c results for each populated area. If the population within the flight corridor is relatively small, an applicant may wish to conduct a less rigorous analysis by making conservative assumptions. Appendix C also offers the option of analyzing a worst-case flight corridor for those flight corridors where such an approach might save time and analysis. Examples of such simplifications are provided.

Identification and Location of Population

In order to perform an E_c analysis, an applicant must first identify the populated areas within a flight corridor. For the first 100 nautical miles from a launch point downrange a U.S. census block group serves as the maximum size of an individual populated area permitted under an appendix C analysis. The maximum permitted size of an individual populated area beyond 100 nautical miles downrange is a 1 degree latitude × 1 degree longitude grid. The size of the areas analyzed will play out differently depending on the location of the proposed launch site. For example, if an applicant proposed a coastal site, the applicant would presumably present the FAA with a flight corridor mostly over water. Population may be limited to that of a few islands, minimizing the amount of data and analysis necessary. If an applicant proposes a launch site located further inland, the applicant would need to obtain the area and population of each census block group in the first 100 nm of the flight corridor. This may prove time consuming, although the FAA has alternative approaches that may simplify the process for such applicants. An applicant may also propose to operate a launch site on foreign territory, where U.S. census data does not apply. In that event, the FAA will apply the principles underlying a launch site location review to the available data on a case-by-case basis.

The final regulations require the analysis of populations at the census block group level for the first 100 nm from the launch point in the flight corridor. An applicant shall employ data from the latest census. An applicant must also include population that may not be included in the U.S. census, such as military base personnel. The FAA recognizes a census block group to be a reasonable populated area for analysis because the risk early in flight is greatest due to long dwell times. IIP range rates in a launch area are relatively slow, which exposes the launch area populations to launch vehicle risks for a longer period of time when compared to similar populations in the downrange area. Depending on the launch site and the launch vehicle, a census block group could be exposed to launch vehicle risks for tens of seconds. In contrast to the size of a populated area in the downrange area, the increased risk due to longer dwell times requires a more detailed evaluation of the launch area for E_c purposes. A census block group is an appropriate size for analysis because it is small enough to accommodate the assumption that a populated area contains homogeneously distributed population without grossly distorting the outcome of the E_c estimates, and because the data is readily available for populations in the United States. An applicant may find the need to use only a portion of a census block group, such as when a populated area is divided by a flight corridor boundary. In that case an applicant should use the population density of the block group to reflect the population in that portion of the census block group.

The FAA allows an applicant to evaluate the presence of people in larger increments of area in the downrange area of a flight corridor than in the launch area of a flight corridor. Populations in the downrange area of a flight corridor must be analyzed in areas no greater than $1° \times 1°$ latitude and longitude grid coordinates. Because dwell times downrange are shorter, the risk to the individual populated areas is less and, therefore, the FAA is willing to accept a different degree of accuracy. IIP range rates in the downrange area

[14] Although an applicant who calculates an appendix B flight corridor will know actual dwell times for its E_c analysis, the FAA has supplied a constant to approximate dwell time for an applicant who relies on an appendix A flight corridor.

can achieve speeds of 500 nm/second. Because the longest distance in a grid space would be approximately 85 nm for a grid on the equator, which is where the largest grid area will be found, the launch vehicle IIP dwell time would be less then 0.20 seconds over that grid. This reduces the risk to population in that grid significantly compared with population in the launch area.

The data needed for a downrange area analysis is also readily available. One source for population data in an area no greater than 1° x 1° latitude and longitude grid coordinates is a database of the Carbon Dioxide Information Analysis Center (CDIAC), Oak Ridge National Laboratory. The CDIAC database is ''Global Population Distribution (1990), Terrestrial Area and Country Name Information on a One by One Degree Grid Cell Basis.'' This database contains one degree by one degree grid information on the world-wide distribution of population for 1990 and country specific information on the percentage of a country's population present in each grid cell.

The CDIAC obtained its population estimates from the United Nations FAO Yearbook, [15] the Guinness World Data Book,[16] and the Rand McNally World Atlas [17] for approximately 6,000 cities with populations greater than 50,000 inhabitants. The population data was updated by CDIAC to 1990 values with available census data. For the rural population allocation, the CDIAC developed global rural population distribution factors based on national population data, data on approximately 90,000 cities and towns, and the assumption that rural population is proportional to the number of cities and towns within each grid cell for each country.

Probability of Impact

The next step in the process is to ascertain the probability of impact for each populated area. In other words, an applicant must find the probability that debris will land in each populated area within the flight corridor under analysis. For this, the applicant must find the probability of impact in both the crossrange and downrange directions, by employing equation C1 for an appendix A flight corridor for an orbital launch or equations C2 through C4 for an appendix A corridor that describes a suborbital launch. For an analysis based on an appendix B flight corridor, an applicant will employ equation C5 for an orbital launch or equations C6 through C8 for a suborbital launch. For both appendix A and B corridors, the probability of impact (P_i) within a particular populated area is equal to the product of the probability of impact in the downrange (P_x) and cross range (P_y) directions, and the probability of vehicle failure (P_f).

$$P_i = P_y * P_x * P_f$$

The analysis applicable to both appendix A and B flight corridors is the same for the crossrange direction, but employs a different equation to determine the probability of impact in the downrange direction. For an appendix A corridor, the FAA specifies a constant in equation C1 to approximate dwell time for the downrange direction. In equation C5 an applicant will employ actual dwell times obtained from the trajectory generated in accordance with appendix B.

An applicant who relies on an appendix A flight corridor will use equation C1 to determine the probability of impact for a particular populated area in the downrange direction by finding the range rate and assuming a total thrusting time of 643 seconds. Equation C1 reflects the fact that appendix A does not employ trajectory data, and therefore, employs a technique for estimating dwell times as a function of range and range rate to determine the probability of impact in the downrange direction. Table C–2 provides the appendix A flight corridor IIP range intervals and corresponding IIP range rates for use in Equation C1.

To create table C–2, the FAA employed actual trajectory data to determine individual range rates for Atlas, Delta and Titan expendable launch vehicles.

The FAA derived the total average thrusting time of 643 seconds from the data in table 5 below by dividing the difference of the upper value of adjacent IIP ranges by the average IIP range rate corresponding to the largest IIP range and summing the results over the set of IIP ranges.

TABLE 5.—DATA TO DERIVE TOTAL THRUSTING TIME

IIP Range (nm)	IIP Range Rate (nm/s)				Δt(s)
	Delta	Atlas	Titan	Avg	
0–100	1.03	0.85	0.96	0.91	110.50
101–500	3.33	3.77	2.23	3.00	133.33
501–1500	4.17	3.66	2.73	3.20	312.99
1500–2500	9.01	21.74	12.99	17.37	57.59
2501–3000	33.33	50.00	41.67	45.84	10.91
3001–4000	66.67	90.91	83.33	87.12	11.48
4001–5000	166.67	142.86	166.67	154.77	6.46
Total-Δt				643.26	

The ''X'' distances were measured directly off the mapping information source.

An applicant who relies on an appendix B flight corridor will employ equation C5 or equations C6 through C8 depending on whether the flight corridor culminates in an impact dispersion area or not. Equation C5 reflects the fact that, unlike an appendix A flight corridor, the trajectory data used to create an appendix B flight corridor provides downrange instantaneous impact points (IIPs). Accordingly, the dwell time associated with a populated area may be ascertained for the difference between the closest and furthest downrange distances of the populated area. *See* figure C–2.

An applicant may find the following six step procedure helpful in determining for individual populated areas the dwell time that equation C5 calls for. The subscripts do not correspond to subscripts in the appendix.

[15] United Nations FAO Yearbook, Vol. 47, Rome, 1993.

[16] The Guinness World Data Book, Guinness Pub. Ltd., Middlessex, England, 1993.

[17] Rand McNally World Atlas, Rand McNally, New York, 1991.

Step 1: Determine the trajectory time (t_1) associated with the trajectory IIP position (x_1) that immediately precedes the uprange point on the populated area boundary. This is accomplished by locating the IIP points in the vicinity of the populated area, drawing lines normal to the trajectory IIP ground trace, and choosing the trajectory time for the IIP point whose normal is closest to the uprange boundary of the populated area but does not intersect it. The distance from the launch point to x_1 may be determined using the range and bearing equations in appendix A, paragraph (b).

Step 2: Determine the trajectory time (t_2) associated with the trajectory IIP position (x_2) that just exceeds the downrange point on the populated area boundary. This is accomplished by locating the IIP points in the vicinity of the populated area, drawing lines normal to the trajectory IIP ground trace, and choosing the trajectory time for the IIP point whose normal is closest to the downrange boundary of the populated area but does not intersect it. The distance from the launch point to x_2 may be determined using the range and bearing equations in appendix A, section (b).

Step 3: Determine the average IIP range rate ($\bar{\dot{R}}$) for the flight period determined in steps 1 and 2 above.

$$\bar{\dot{R}} = \frac{(x_2 - x_1)}{(t_2 - t_1)} \text{ (units in nm/s)}$$

Step 4: Determine the distance along the nominal trajectory to the uprange point (x_3) on the populated area boundary. This is accomplished by drawing a line normal to the trajectory IIP ground trace and tangent to the uprange boundary of the populated area, and determining the distance along the nominal trajectory IIP ground trace from the launch point to the intersection of the normal and the ground trace.

Step 5: Determine the distance along the nominal trajectory to the downrange point (x_4) on the populated area boundary. This is accomplished by drawing a line normal to the trajectory IIP ground trace and tangent to the downrange boundary of the populated area, and determining the distance along the nominal trajectory IIP ground trace from the launch point to the intersection of the normal and the ground trace.

Step 6: The dwell time (t_d) is estimated by the following equation.

$$t_d = \frac{(x_4 - x_3)}{\bar{\dot{R}}} \text{ (units in seconds)}$$

For either type of flight corridor, an applicant determines the probability of impact in the crossrange direction, (P_y), through a series of steps, of which the first is measuring the distance from the nominal trajectory IIP ground trace to the closest and furthest points in the crossrange direction of the area that contains population. The populated area may consist of a census block group or a 1 degree latitude by 1 degree longitude grid. *See* figure C–1. To determine the distance of the debris pattern in that populated area, the applicant needs to estimate the standard deviation of debris impacts. For purposes of an appendix C analysis, the crossrange boundaries of a flight corridor represent three standard deviations (3σ) of all debris impacts from normal and malfunction trajectories. To apply this to a populated area, an applicant must first find the distance from the nominal trajectory to the crossrange boundary, measured on a line normal to the trajectory through the geographic center of the populated area, and then divide that distance by three.

Finally, the probability of failure is also an element in calculating the probability of impact. The FAA assigns a failure probability (P_f) constant of $P_f = 0.10$ for guided expendable launch vehicles. This represents what the FAA intends as a conservative estimate of the failure percentage of current expendable launch vehicles, and may be conservative because many current expendable launch vehicles are more reliable. The appendix C process assumes that the probability of impacting within the corridor is one, and the probability of impacting outside the corridor is zero. The flight termination system is assumed to function perfectly in all failure scenarios.

A final variation on computing the probability of impact for a particular populated area is used when computing the probability of impact (P_i) within the impact dispersion area of a guided suborbital expendable launch vehicle. In this case, the probability of success (P_s) is substituted for the probability of failure (P_f), and an applicant shall employ a method similar to that used in appendix D to calculate the probability of impact for any populated areas inside the impact dispersion area. This divergence, the use of probability of success rather than probability of failure, from the variable used for an orbital expendable launch vehicle arises out of the relative risk associated with an impact dispersion area of a guided sub-orbital expendable launch vehicle. The same risks associated with a guided orbital launch are also associated with a guided sub-orbital launch except for the designated impact area for the final stage of the guided sub-orbital launch vehicle. The final stage is intended to return to Earth rather than to enter orbit. On the basis of past history, the risk due to a planned impact in the dispersion area is higher than an unplanned impact. The FAA accordingly requires the use of P_s inside the impact dispersion area rather than P_f for determining the probability of impact in a guided suborbital expendable launch vehicle's impact dispersion area.

Totaling Risk of All Populated Areas in Flight Corridor

The E_c estimate for a flight corridor is a summation of the risk to each populated area and results in an estimate of E_c inside the corridor, E (Corridor). This means that an applicant estimates E_c for each individual populated area within a flight corridor, using the following equation:

$$E_{ck} = P_i \cdot \left(\frac{A_c}{A_k}\right) \cdot N_k$$

P_i is the probability of hitting the populated area. A_c is the effective casualty area of the vehicle and may be obtained from table C–3. A_k is the area of the populated area. N_k is the population in A_k, and is obtained from census data. The label ''k'' is used to identify the individual populated area. The summed E_c for all populated areas added together is the E_c (Corridor).

The FAA requires an applicant to use an effective casualty area specific to an expendable launch vehicle class and range when performing the E_c calculation. An effective casualty area (A_c) means the aggregate casualty area of each piece of debris created by a launch vehicle failure at particular points on its trajectory. The casualty area for each piece of debris is the area within which 100 percent of the unprotected population on the ground is assumed to be a casualty. This area is based on the characteristics of the debris piece including its size, the path angle of its trajectory, impact explosions, and debris skip, splatter, and bounce. In each of the vehicle classes, the A_c decreases, resulting in a smaller casualty area, as a function of distance downrange because vehicle size and explosive potential decreases as explosive propellant is consumed and expended stages are ejected during vehicle flight.

An effective casualty area as a function of time-after-liftoff is provided

in table C–3 for expendable launch vehicle classes listed in table 1 of section 420.19. The FAA derived the effective casualty areas in table C–3 from DAMP, a series of risk estimation computer programs used at federal launch ranges, to evaluate the vehicle classes described in table 1, section 420.19. DAMP considers other factors besides debris characteristics, such as the size of a standing person, which increases the casualty area, and sheltering, which would tend to decrease the casualty area. Because considering sheltering has a greater effect than considering the size of a standing person, and was not assumed in table C–3, the effective casualty areas in table C–3 are conservative with regards to those factors.

An applicant calculates casualty expectancy for each populated area within a flight corridor. After the casualty expectancies have been estimated for all populated areas, the E_c values are summed to obtain the total corridor risk.

The FAA will not approve the proposed launch site location if the estimated expected casualty exceeds 30×10^{-6}. An applicant may either modify its proposal, or if the flight corridor used was generated by the method in appendix A, use the typically less conservative but more accurate method in appendix B to narrow the flight corridor and perform another appendix C overflight risk analysis. An applicant may employ specified variations to the analysis described above. Six variations are identified in appendix C. The first four variations permit an applicant to make conservative assumptions that would lead to an overestimation of the corridor E_c compared with the more detailed process described. Although appendix C's approach simplifies a typical launch safety analysis somewhat by providing conservative default parameters to use, it may also prove unnecessarily complex for applicants proposing launch sites with launch corridors encompassing extremely few people. For those situations, appendix C, through subparagraphs (c)(1)–(8), provides the option for an applicant to further simplify the estimation of casualty expectancy by making worst-case assumptions that produce a higher value of the corridor E_c compared with the analysis otherwise defined by appendix C. This may be particularly useful when an applicant believes E_c is well below the acceptable value.[18]

These variations allow an applicant to assume that P_x and P_y have a value of 1.0 for all populated areas, or combine populated areas into one or more larger populated areas and use the greatest population density of the component populated areas for the combined area or areas. An applicant may also assume P_y has a value of one for any given populated area, or, for any given P_x sector, assume P_y has a value of one and use a worst case population density for the sector. A P_x sector is an area spanning the width of a flight corridor and bounded by two time points on the trajectory IIP ground trace. All four of these reduce the number of calculations required for applicants with little population within a flight corridor.

Another option permitted by appendix C is for an applicant who would otherwise fail the baseline analysis to perform a more refined EC analysis by negating the baseline approach's overestimation of the probability of impact in each populated area. If the flight corridor includes populated areas that are irregular in shape, the equations for probability of impact in appendix C may cause E_c to be overestimated. This is because the result of the P_i computation for each populated area represents the probability of impacting within a rectangular area that bounds the populated area. As shown in figure C–1 of appendix C, the length of two sides of the rectangle would be $x_2 - x_1$, and the length of the other two sides would be y_2—y_1. Populated areas used to support the appendix C analysis must be no bigger than a U.S. census block group for the first 100 nautical miles from a launch point and no bigger than a 1 degree latitude x 1 degree longitude grid (1° x 1° grid) beyond 100 nautical miles downrange. Whether the populated area is a census block group, a 1° x 1° grid, or a land mass such as a small island, it will not likely be a rectangle. Even a 1° x 1° grid near the equator, which approximates a rectangle, will not line up with the trajectory ground trace. Thus, a portion of the P_i rectangle includes area outside the populated area being evaluated. The probability of impacting in the rectangle is higher than impacting just in the populated area being evaluated. The value of the probability of impact calculated in accordance with appendix C will thus likely be overestimated.

One approach permitted by appendix C is to divide any given populated area into smaller rectangles, determine P_i for each individual rectangle, and sum the individual impact probabilities to determine P_i for the entire populated area. A second approach permitted by appendix C is, for a given populated area, to use the ratio of the populated area to the area of the original P_i rectangle.

If the estimated expected casualty exceeds $30\times10-6$, the FAA will not approve the proposed launch site location. In that event, the only remaining options for an applicant would be to rely on one of its potential customers obtaining a launch license for launch from the proposed site.

Appendix D

Appendix D contains the FAA's method for determining the acceptability of the location of a launch site for launching unguided suborbital expendable launch vehicles. Appendix D describes how to define an overflight exclusion zone and each impact dispersion area to be analyzed for risk for a representative launch vehicle. Appendix D also describes how to estimate whether risk to the public, measured by expected casualty, falls within the FAA's threshold of acceptable risk. In short, the approach requires an applicant to define an overflight exclusion zone around a launch point, determine the impact point for each spent stage and then define an impact dispersion area around each impact point. If populated areas are located in the impact dispersion areas and cannot be excluded by altering the launch azimuth, the FAA requires a risk analysis that demonstrates that risk to the public remains within acceptable levels.

As a first step, an applicant selects which launch points at the proposed launch site would be used for the launch of an unguided suborbital expendable launch vehicle. An applicant must also then select an existing suborbital expendable launch vehicle, for which apogee data is available, whose final stage apogee represents the maximum altitude of any unguided suborbital expendable launch vehicle intended for launch from that launch point. The applicant would then plot the distance, which is referred to as the impact range, from the launch point to the nominal impact point on the azimuth for each stage. Employing the impact dispersion radius of each stage, the applicant would define an impact dispersion area around each nominal impact point.

The methodology for the impact dispersion area requirements is grounded in three assumptions which reflect current practice. For purposes of this location review, the FAA assumes

[18] As noted above, the purpose of the E_c analysis as part of the launch site location review is not to determine a value of E_c but rather to confidently demonstrate that E_c is less than the acceptable threshold value.

that unguided suborbital expendable launch vehicles are not equipped with a flight termination system, and that public risk criteria are accordingly met through the implementation of a wind weighting system, launch procedures and restrictions, and the proper selection of a launch azimuth and elevation angles. These aspects are currently reflected in FAA guidelines and will be addressed in its regulations for launches from non-federal launch sites. The cumulative launch experience in unguided suborbital expendable launch vehicles demonstrates that risk to the public from launches of these vehicles is attributable to planned stage impact during a successful flight. Controlling these risks solely through measures implemented prior to flight rather than relying on active measures during flight, as is the case for a vehicle equipped with an FTS, has provided historically an acceptable approach to protection of the public. Accordingly, the appendix D analysis should adequately address the general suitability of each launch point for unguided suborbital expendable launch vehicle launches up to the altitude proposed. Operational requirements imposed on a launch licensee through license conditions should adequately address risks posed by the actual launch of unguided suborbital expendable launch vehicles.

The location review for a launch point that will support unguided suborbital expendable launch vehicles also assumes that intermediate and final stages impact the Earth within three standard deviations (3σ) of each nominal, no wind, impact point. This means that an appendix D analysis does not account for failures outside of three standard deviations from each intended impact point.

It also means that an appendix D analysis does not simulate an actual launch in actual wind conditions. For actual launches, wind weighting can be used to obtain the nominal, no wind, impact point for the final stage only. In order to ensure that the launch meets E_c, ship hit, and aircraft hit probabilities, launch operators compute the wind drifted impact points of all stages using the launcher settings determined through wind weighting so that intermediate stage impacts are determined just prior to launch. Although appendix D does not address this fact directly, it does show whether at least some launches can be conducted depending on the wind conditions.

Defining an Overflight Exclusion Zone and Impact Dispersion Areas

The areas an applicant will analyze for risk to the public posed by the launch of an unguided suborbital expendable launch vehicle consist of an overflight exclusion zone and stage impact dispersion areas. Having selected a launch point and a launch vehicle for which empirical data is available, an applicant must define each zone and area using the methodology provided. An overflight exclusion zone shall consist of a circle with a radius of 1600 feet centered on a launch point. An overflight exclusion zone is the area which must be free of the public during a launch. Creation of each impact dispersion area involves several more steps. For each stage of the analyzed vehicle an applicant must identify the nominal stage impact point on the azimuth where the stage is supposed to land, and draw a circle around that point, using the range and bearing equations of appendix A or geographic information system (GIS) software. That circle describes the impact dispersion area, and an applicant defines an impact dispersion area for each stage.

An applicant must at the outset provide the geodetic latitude and longitude of a launch point that it proposes to offer for launch, and select a flight azimuth. Once an applicant has selected a launch point location and azimuth, the next step is to determine a 1600 foot radius overflight exclusion zone for that launch point. As with an overflight exclusion zone created pursuant to appendices A and B, an applicant must show that the public would be cleared from its overflight exclusion zone prior to launch. Although suborbital vehicles have a very low likelihood of failure, failure is more likely to occur in the early stages of the launch. Consequently, the FAA is guarding against that risk through requiring an applicant to show the ability to evacuate an overflight exclusion zone. As with the flight corridors of appendices A and B, the FAA bases the size of the overflight exclusion zone on the maximum distance that debris is expected to travel from a launch point if a mishap were to occur very early in flight. The FAA has estimated the D_{max} for an unguided suborbital expendable launch vehicle, and the result is 1600 feet. Accordingly, an applicant would define an appendix D overflight exclusion zone as a circle with a radius of 1600 feet.

Because an applicant must choose the maximum altitude anticipated of a suborbital expendable launch vehicle for launch from its site, an applicant needs to acquire the apogee of each stage of a representative vehicle. An applicant need not possess full information regarding a specific representative launch vehicle. All that is necessary is the apogee of each stage. The apogee height must be obtained from an actual launch conducted at an 84° elevation angle. If needed, data is available from the FAA. The FAA has compiled apogee data from past launches from Wallops Flight Facility for a range of launch vehicles and payloads. This data will be provided to an applicant upon request and may be used to perform the analysis.

An applicant then defines impact dispersion areas for each stage's nominal impact point. Having selected a launch vehicle most representative of what the applicant intends for launch from the proposed launch point, an applicant will use either its own empirical apogee data or data from one of the vehicles in the FAA's data base. Whether an applicant uses vehicle apogee data obtained from the FAA or from elsewhere, the applicant must employ the range and dispersion factors to determine the location of each nominal impact point and the size of each impact dispersion area.

Under appendix D, an applicant would estimate the impact range and dispersion parameters by multiplying the apogee of a launch vehicle intended for the prospective launch site by factors. Impact range and impact dispersion factors are derived from launch vehicle pedigrees of sounding rockets used by NASA Wallops Flight Facility in its sounding rocket program.[19] The factors provide estimators of staging data for an unguided vehicle launched at a standard launcher elevation, which is the angle between the launch vehicle's major axis (x) and the ground, of 84°. The appendix defines the relationship between the apogee of a launch vehicle stage, an impact range and a 3σ dispersion radius of a stage. This relationship is expressed as two constants, which vary with the altitude of the apogee, an impact range factor and an impact dispersion factor.

To locate each nominal impact point, an applicant will calculate the impact range for the final stage and all other stages. An impact range describes the distance between an applicant's proposed launch point and the nominal impact point of a stage, or, in other words, its estimated landing spot along

[19] These vehicles include Nike Orion, Black Brant IX, Black Brant XI, and Black Brant XII. They are representative of the current launch vehicle inventory and should approximate any proposed new launch vehicle.

the azimuth selected for analysis. For this estimation, an applicant would employ the FAA's impact range factors of 0.4 or 0.7 as multipliers for the apogee of the stage. If an apogee is less than 100 kilometers, the applicant shall employ 0.4 as the impact range factor for that stage. If the apogee of a stage is 100 kilometers or more, the applicant shall use 0.7 as a multiplier. In plotting the impact points on a map, an applicant shall employ the plotting methods provided by appendix A.

An impact dispersion radius describes the impact dispersion area of a stage. The FAA relies on an estimated impact dispersion radius of three standard deviations (3σ) because significant population, such as a densely populated city, in areas within distances up to 3σ of the impact point could cause significant public risk. An applicant shall obtain the radius of the impact dispersion area by multiplying the stage apogee by the FAA's impact dispersion factor of 0.4 for an apogee less than 100 kilometers and of 0.7 for an apogee of 100 kilometers or more. The final stage would typically produce the largest impact dispersion area.

Once an applicant determines the impact dispersion radii, the applicant must plot each impact dispersion area on a map in accordance with the requirements of paragraph (b). This is depicted in figure D–1. An applicant may then determine if flight azimuths exist which do not affect populated areas. If all potential flight azimuths contain impact dispersion areas, which encompass populated areas, then the FAA requires an E_c estimation of risk.

Public Risk E_c Estimation

The FAA will approve a launch point in accordance with this appendix if there exists a set of impact dispersion areas for a representative launch vehicle in which the sum of risk to the public does not exceed the FAA's acceptable risk threshold. An overflight exclusion zone must contain no people. If a populated area is present within the impact dispersion areas, an applicant shall estimate the risk to the public posed by possible stage impact. An applicant must then determine whether its estimated risk satisfies the FAA requirement of an E_c of no more than 30×10^{-6}. The E_c estimation is performed by computing the sum of the risk for the impact of each stage and accounting for each populated area located within a 3σ dispersion of an impact point. The equation used to accomplish this is the same as that used in the impact probability computation in appendix C. Unlike, however, the method in appendix C, which accounts for an impact due to a failure, the probability of a stage impact occurring is $P_s = 1 - P_f$, where P_s is the probability of success, and P_f is the probability of failure. For the purposes of the launch site location review, a constant of 0.98 is used for the probability of success for unguided suborbital expendable launch vehicles. The probability of success is used in place of P_f in calculating both the crossrange and downrange probability of impact.

The location review for launch points intended for the launch of unguided suborbital expendable launch vehicles differs from the review of the location of launch points intended for the launch of guided orbital and suborbital expendable launch vehicles. In analyzing whether risk remains at acceptable levels, E_c equations in appendix D rely on the probability of success rather than the probability of failure. The use of stage impact probability, typified as the probability of success (P_s), for suborbital expendable launch vehicles is necessary because stage impacts are high probability events which occur near the launch point with dispersions which may overlap or be adjacent to the launch point. The difference between the methods of appendices A, B and C and appendix D reflects the fundamental differences between the likely dominant source of risk to the public from guided and unguided vehicles and the methods that have been developed for guarding public safety against the risks created by each type of vehicle. In other words, the methods for defining impact dispersion areas and for conducting an impact risk assessment for an unguided vehicle are premised on the risks posed by a successful flight, that is, the planned deposition of stages and debris. In contrast, the methodology for developing a flight corridor and associated risk methodology for guided vehicles assumes that the likely major source of risk to the public arises out of a failure of a mission and the ensuing destruction of the vehicle.[20]

The high degree of success recorded for unguided expendable launch vehicles renders the probability of success the greater source of risk. Because of their relative simplicity of operation, the failure rate, over time, for unguided expendable launch vehicles has amounted to between one and two percent. At this level of reliability, the FAA believes that its primary focus of concern for assessing the safety of a launch site should be the more likely event, namely, the public's exposure to the planned impact of vehicle stages and other vehicle components, such as fairings, rather than the risk posed by exposure to debris resulting from a failure. Success is the high risk event. Although failure rates are low for unguided expendable launch vehicles, their spent stages have large impact dispersions. Moreover, the FAA's impact dispersion area estimations generally produce impact dispersion areas large enough to encompass most of the populations exposed to a possible failure as well as to a nominal flight, thus ensuring the inclusion of any large, densely populated area in the analysis. Thus, all but a small percentage of populated area will be analyzed to some extent, albeit using impact probabilities based on success.

For appendix D, the FAA assumes that the stage impact dispersion in both the downrange and cross range directions are equal. This is a valid assumption for assessing a launch site for suborbital expendable launch vehicles because their trajectories produce near circular dispersions. NASA data on sounding rocket impact dispersion supports this conclusion.

The impact dispersion area is based on a 3σ dispersion. Appendix D uses the effective casualty area data, table D–1, which contains information similar to appendix C, table C–3. This data represents the estimation of the area produced by both suborbital expendable launch vehicle inert pieces. The risk estimation approach in appendix D has the applicant calculate the probability of impact for each populated area, and then determining an E_c value for each populated area. To obtain the estimated E_c for an entire impact dispersion area, the applicant adds the E_c results for each populated area. If the population within the impact dispersion area is relatively small, an applicant may wish to conduct a less rigorous analysis by making conservative assumptions. Appendix D offers the option of analyzing a worst-case impact dispersion area for those locations where such an approach might save time and analysis, similar to the approach of appendix C.

The final section in subpart B is section 420.31. It requires an applicant to complete an agreement with the local U.S. Coast Guard district to establish procedures for the issuance of a Notice to Mariners prior to a launch and other such measures as the Coast Guard deems necessary to protect public health and safety. An applicant must also complete an agreement with the FAA Air Traffic Control (ATC) office having jurisdiction over the airspace

[20] The one exception is the impact dispersion area for a guided suborbital launch vehicle. That area is analyzed assuming launch success.

through which launches will take place, to establish procedures for the issuance of a Notice to Airmen prior to a launch and for closing of air routes during the launch window and other such measures as the FAA regional office deems necessary to protect public health and safety.

These two provisions clarify from the Launch Site NPRM that the FAA and Coast Guard agreements must be completed as a requirement for a license. Section 420.31(c) adds that an applicant that plans to operate a launch site located on a federal launch range does not have to enter into those agreements if the applicant is using existing federal launch range agreements with the U.S. Coast Guard and the FAA ATC office having jurisdiction over the airspace through which launches will take place.

Subpart C contains license term and conditions. Section 420.41 specifies the authority granted to a launch site operator by a license and the licensee's obligation to comply with representations contained in the license application as well as the FAA's license terms and conditions. The provision limits a licensee's authorization to the launch points on the launch site and to the types of launch vehicles used to demonstrate the safety of the launch site location, and, for orbital launch vehicles, to vehicles no larger than the weight class analyzed. The provision also clarifies the licensee's obligation to comply with any other laws or regulations applicable to its licensed activities and identifies certain rights that are not conveyed by a launch site operator license.

Section 420.43 specifies the duration of a license to operate a launch site, the grounds for shortening the term, and that a license may be renewed.

Section 420.45 provides the procedures that an applicant must follow to obtain FAA approval for the transfer of an existing license to operate a launch site.

Section 420.47 specifies the procedures that the FAA will follow to modify a license through a license order or written approval, and the procedures that a launch site operator licensee must follow to obtain an FAA license modification. A licensee must obtain a license modification if the licensee proposes to operate the launch site in a manner not authorized by its license. This means, among other things, that if a representation in the license application regarding an issue material to public safety is no longer accurate or does not describe the licensee's operation or intended operation of the site, a licensee must obtain a license modification. This is because the representations a licensee makes in its application become part of the terms and conditions of its license. A licensee must obtain FAA approval prior to modifying its operations. In the event of special circumstance and where safety warrants, the FAA will work with a licensee to accommodate any timing problems.

Section 420.47 also specifies the procedures for a licensee to obtain and the FAA to issue a license modification. The FAA may modify a license using a written approval rather than a license order. This may occur, for example, in cases where the change addresses an activity or condition that was represented in the license application but not spelled out in a license order.

Section 420.49 imposes an obligation on a launch site operator licensee, its customers, and its contractors to cooperate with the FAA in compliance monitoring of licensed activities. This requirement recognizes an FAA compliance monitor's need to observe operations conducted by all parties at the site and to have access to records and personnel if the FAA is to be assured that public safety is being protected.

Subpart D contains the responsibilities of a licensee. Section 420.51 describes a licensee's obligation to operate its launch site in accordance with the representations in its license application, 49 U.S.C. Subtitle IX, ch. 701 and the FAA's regulations.

Section 420.53 requires a launch site operator licensee to control public access to the launch site and to protect the public present at the launch site. The regulation seeks to protect the public from the consequences of flight and pre-flight activities by separating the public from hazardous launch procedures. The public could also be at risk if allowed to enter the launch site or move about without adequate safeguards. This provision requires the licensee to prevent the public from gaining unauthorized access to the launch site. The applicant will be given broad discretion in selecting the method for controlling access. The provision will also hold the licensee responsible for informing members of the public of safety precautions before entry and for warning of emergencies on-site. A licensee will also be responsible for escorting the public between hazard areas not otherwise controlled by a launch operator at the launch site, and employing warning signals or alarms to notify persons on the launch site of any emergency.

Section 420.55 requires a licensee to develop and implement procedures to schedule operations to ensure that each operation carried out by a customer at the launch site does not create the potential for a mishap that could result in harm to the public because of the proximity of the operations, in time or place, to operations of any other customer. Customers include any launch operator, and any contractor, subcontractor or customer of the launch site operator's customer at the launch site. This requirement is necessary to ensure that the operations of one launch site customer do not interact with the operations of another customer to create a public safety hazard at the launch site or beyond. For example, the testing of equipment using radio frequency transmissions could trigger ordnance used by someone elsewhere on the site if the two launch preparation activities are not coordinated or warnings issued. Likewise, hazardous operations by one customer with the potential to reach another customer must be coordinated by the launch site operator. A launch site operator is required to ensure that all customers at the site are informed of procedures and adhere to scheduling requirements before commencing operations at the launch site.

Section 420.57 establishes notification requirements for a licensee. The licensee is responsible for notifying customers of any limitations on use of the site. This provision ensures that customer activities are compatible with other activities at the launch site. It also ensures that limitations on the use of facilities provided to customers by a launch site operator are communicated to the customer. Examples include the maximum quantity of propellant allowed in a facility, or weight limitations on lifting devices within the facility. The licensee will be responsible for maintaining agreements with the Coast Guard to arrange for issuance of Notices to Mariners prior to launch and with the regional FAA ATC office for Notices to Airmen and closure of air routes. In addition, the licensee will notify local officials and landowners adjacent to the launch site of the flight schedule. This provision places an on-going responsibility on the site operator licensee for establishing notification procedures, rather than on the numerous launch licensees whose involvement with the launch site may be more sporadic and temporary. The requirement does, however, leave open the option of a launch licensee implementing the procedures established by the launch site operator.

Section 420.59 requires a licensee to develop and implement a launch site accident investigation plan containing procedures for reporting, investigating

and responding to a launch site accident. The provision extends reporting, investigation and response procedures currently applicable to launch related accidents and incidents to accidents occurring during ground activities at a launch site.

A launch site operator may satisfy the requirements of section 420.59 by using accident investigation procedures developed in accordance with the requirements of the U.S. Occupational Safety and Health Administration (OSHA) at 29 CFR 1910.119 and 120, and the U.S. Environmental Protection Agency (EPA) at 40 CFR part 68, to the extent that the procedures include the elements required by section 420.59.[21] The FAA wishes to ease the regulatory burden here and in other parts of the final regulations where other federal regulatory agencies impose requirements on launch site operators.

OSHA's standard at 29 CFR 1910.119 includes provisions for investigating incidents and emergency response. *See* 29 CFR 1910.119(m) and (n). In addition, 29 CFR 1910.120, hazardous waste operations and emergency response (HAZWOPER), provides for emergency response planning for operations involving hazardous materials, including those listed by the Department of Transportation under 49 CFR 172.101.[22] Launch operators and launch site operators in compliance with these requirements will be taking steps to protect the public as well as their workers.

EPA's requirements at 40 CFR 68 also include standards for incident investigation and emergency response. *See* 40 CFR 68.60, 68.81, 68.90, and 68.180. For both the OSHA and EPA requirements, compliance with 42 U.S.C. 11003, Emergency Planning and Community Right-to-Know, satisfies many of the emergency response provisions.

Section 420.59(e) is new since the Launch Site NPRM, and states that a launch site accident investigation plan must contain procedures for participating in an investigation of a launch accident for launches that take place from the launch site. This provision also requires the licensee to cooperate with FAA or National Transportation Safety Board (NTSB) investigations of a launch accident for launches that take place from the launch site. The FAA believes that any investigation of a launch accident must have the participation of the launch site operator. The FAA requests comment on this new provision.

Section 420.61 provides the requirements for launch site operator retention of records, data, and other material needed to verify that launch site operator operations are conducted in accordance with representations contained in the license application, and for record production in the event of launch site accident investigation, or compliance monitoring.

Sections 420.63 through 420.69 contains the FAA's explosive facility siting standards for the protection of the public from launch site explosive hazards created by liquid and solid propellants and other explosives. These standards shall be used by an applicant to site facilities that support activities involving liquid and solid propellants and other explosives, or facilities potentially exposed to such activities, and to document the layout of these facilities.[23]

Section 420.63(a) requires a launch site operator to ensure that the configuration of the launch site is in accordance with the licensee's explosive site plan, and that its explosive site plan is in compliance with the requirements of sections 420.65–420.69. Section 420.63 identifies items that must be in an explosive site plan. The explosive site plan must include a scaled map or maps that show the location of all proposed explosive hazard facilities where solid and liquid propellants would be stored or handled.[24] An applicant must identify the class and division for each solid propellant and other explosive and the hazard and compatibility group for each liquid propellant.

In addition to the location of explosive hazard facilities, the map or maps must indicate actual and minimum allowable distances between each explosive hazard facility and other explosive hazard facilities and each public area, including the launch site boundary. One means by which an applicant could show that the distances are at least the minimum required is by drawing a circle or arc with a radius equal to the minimum allowed distance centered on each explosive hazard facility.

In addition to containing maps, an explosive site plan should also describe, through tables or lists, the maximum quantities of liquid and solid propellants and other explosives to be located at each explosive hazard facility, and the activities to be conducted within each explosive hazard facility.

Pursuant to section 420.63(b), a licensee operating a launch site located on a federal launch range does not have to demonstrate compliance with the requirements of §§ 420.65–420.69 if the licensee is in compliance with the federal launch range's explosive safety requirements. As proposed in the Launch Site NPRM, this provision stated that a launch site operator did not have to comply with the FAA's explosive safety requirements. Out of concern that this might be misinterpreted as permitting a launch site operator not to comply with either the range requirements, which are substantially similar to those contained in this part, or those of the FAA, the FAA wishes to clarify that it only intended that a launch site operator not have to demonstrate compliance to the FAA where a launch site operator demonstrates explosive safety to a federal launch range. Federal launch ranges have separate rules which are either identical or similar to the rules proposed, or require mitigation measures which otherwise ensure safety. The FAA only wishes to see, in accordance with section 420.15(d)(2), the launch site operator's explosive site plan submitted to the federal launch range.

In accordance with section 420.63(c), for explosive siting issues not otherwise addressed by the requirements of sections 420.65–420.69, a launch site operator must clearly and convincingly demonstrate a level of safety equivalent to that otherwise required by part 420. This provision is new since the Launch Site NPRM, and has been added because the explosive siting requirements are designed to codify only core explosive siting standards. The FAA realizes that some launch site siting scenarios will involve safety issues not otherwise addressed in this rulemaking. Thus, this provision was added to make clear that explosive siting issues outside the provisions issued with this rulemaking will be resolved in accordance with the requirements of safety. DOD Standard

[21] The EPA's requirements in 40 CFR 68 apply to ''incidents which resulted in, or could reasonably have resulted in a catastrophic release.'' 40 CFR 68.60(a). OSHA's requirements in 29 CFR 1910.119 are similar, applying to ''each incident which resulted in, or could reasonably have resulted in a catastrophic release of a highly hazardous chemical in the workplace'' 29 CFR 1910.119(m)(1).

[22] Hazardous materials in AST regulations, section 401.5, are defined as hazardous materials as defined in 49 CFR Sec. 172.101.

[23] An analysis may include evaluations of blast hazards; fragment hazards; protective construction; grounding, bounding and lightning protection systems; electrical installations; natural or man-made terrain features; or other mission or local requirements.

[24] Areas where solid propellants and other explosives would be stored must be included in the plan even though ATF requirements apply. Applicants with magazines where solid propellants and other explosives are to be stored must obtain an ATF permit and meet ATF quantity-distance requirements. The FAA will use the information to ensure that those of its requirements unrelated to storage are satisfied and to coordinate with AFT when necessary.

6055.9 is perhaps the best example of a standard governing many more explosive safety issues than those addressed to date in this part.

In order to demonstrate compliance with the explosive site standards, a launch site operator applicant first determines those areas at its proposed launch site where solid or liquid propellant and other explosives will be stored or handled, and which the FAA designates as explosive hazard facilities. Explosive hazard facilities may include payload processing facilities, launch pads, propellant storage or transfer tanks, and solid rocket motor assembly buildings. A launch site operator must then determine the types and maximum quantity of propellants and other explosives to be located at each explosive hazard facility. For solid propellants and other explosives, the applicant determines the total weight, expressed in pounds, of explosive material to be contained in the items that will be located at each explosive hazard facility. For liquid propellants, the applicant determines either the explosive equivalency of a fuel and oxidizer combination if fuels and oxidizers would be located together at, what is referred to as, incompatible distances; or, if fuels and oxidizers would not be located together, an applicant would determine the net weight in pounds of liquid propellant in each explosive hazard facility.

The next step for a launch site operator applicant would be to determine the minimum allowable separation distance between each explosive hazard facility and all other explosive hazard facilities, the launch site boundary, and other public areas such as the launch complex of another launch operator, public railways and highways running through the launch site, and any visitor centers. The distances between explosive hazard facilities are important to ensure that an explosive event in one explosive hazard facility would not cause an explosive event in another explosive hazard facility. The distances between explosive hazard facilities and public areas are important to ensure that the public is protected from blast, debris, and thermal hazards. Exact distances must be given between the wall or corner of the facility closest to the closest wall or corner of other explosive hazard facilities and public areas. Minimum allowable distances are determined using tables in appendix E. These tables reflect distances based on the type and quantity of propellant or other explosive to be located within an explosive hazard facility. Determining the minimum allowable distance between two explosive hazard facilities is accomplished by applying the applicable criteria to each and then separating them by at least the greater distance prescribed for each explosive hazard facility. For example, if a certain amount of explosive division 1.3 solid propellant would be located at explosive hazard facility A, and twice as much explosive division 1.3 solid propellant would be located at explosive hazard facility B, the prescribed distance generated by explosive hazard facility B would serve as the minimum distance permitted between explosive hazard facility A and explosive hazard facility B.

The criteria for determining the minimum required distances between each explosive hazard facility and all other explosive hazard facilities and each public area, including the launch site boundary, are contained in section 420.65 for solid propellants and other solid explosives and section 420.67 for liquid propellants. Section 420.69 includes rules for when liquid and solid propellants and other explosives are located together.

Section 420.65 covers quantity determinations and minimum required distances for explosive hazard facilities where solid propellants and other solid explosives would be handled. Under section 420.65(a), an applicant first determines the maximum total quantity, by class and division, of explosive in each explosive hazard facility where solid propellants and other solid explosives would be handled. The total quantity of explosives in an explosive hazard facility shall be the maximum total weight, expressed in pounds, of explosive material in the contents of the explosive hazard facility. For example, if a facility could hold up to ten solid rocket motors of a particular type, even though it might only rarely hold that many motors, the applicant would calculate the total weight of division 1.3 explosive material in the ten motors.

Section 420.65(b) addresses the situation where explosive divisions 1.1 and 1.3 explosives are located in the same explosive hazard facility. The section states that when explosive divisions 1.1 and 1.3 explosives are planned to be located in the same explosive hazard facility, the total quantity of explosive shall be considered division 1.1 for quantity-distance determinations, or, the applicant may add the net explosive equivalent weight of the division 1.3 items to the net weight of division 1.1 items to determine the total quantity of explosives. This latter provision will decrease the required distance.

Once a launch site operator has determined the total quantity of solid propellants and other solid explosives in each explosive hazard facility, section 420.65(c) requires a launch site operator to separate each explosive hazard facility where solid propellants and other solid explosives will be handled from all other explosive hazard facilities and each public area, including the launch site boundary, in accordance with the minimum separation distances contained in table E–1 in appendix E. Table E–1 provides two distances for each quantity and division level. The first, a public area distance, is the minimum distance permitted between a public area and an explosive hazard facility. The second, an intraline distance, is the minimum distance permitted between any two explosive hazard facilities used by one launch site customer. Other explosive hazard facilities may constitute public areas, because the definition of public area includes any area in the possession or ownership, or otherwise under the control of a launch site operator's other customers. Distance calculations would be made accordingly.

Section 420.65(d) provides separation rules. Section 420.65(d)(1) states that a launch site operator shall employ no less than the applicable public area distance to separate an explosive hazard facility from each public area and from the launch site boundary. Section 420.65(d)(2) states that a launch site operator shall employ no less than an intraline distance to separate an explosive hazard facility from all other explosive hazard facilities that will be used by a single customer.

Section 420.65(d)(3) allows a launch site operator to employ no less than 60% of the applicable public area distance, or the public traffic route distance, to separate an explosive hazard facility from a public area that consists only of a public highway or railroad line, for explosive division 1.1 only. This is new since the Launch Site NPRM and was included because explosive division 1.1 explosives have been added. This option does not apply to explosive division 1.3 because for explosive division 1.3 explosives, the public traffic route distance is the same as the public area distance. Public traffic route distance can be applied to division 1.1 explosives when a public area consists of airplane taxiways, open recreational facilities not possessing structures, and public traffic routes. Streets and roads within the licensee's control are not considered public highways unless they are used for through traffic other than that related to the work of the launch site.

Section 420.65(d)(4) allows a launch site operator to use linear interpolation for NEW quantities between table entries.

Finally, section 420.65(d)(5) states that a launch site operator shall measure separation distance from the closest debris or explosive hazard source in an explosive hazard facility. For example, for a building, a launch site operator would measure from the wall or corner of the facility closest to the closest wall or corner of other explosive hazard facilities and public areas. When solid rocket motors or motor segments are freestanding, an applicant would measure from the closest motor or motor segment. An acceptable way to demonstrate that minimum distance requirements are met is to draw a circle or arc centered on the closest source of debris or hazard showing that no other explosive hazard facility or public area is within the distance permitted.

Note that Q–D requirements address siting of facilities, not operational control of hazard areas. During actual operations, the existence and size of a hazard area is dependent on the actual amount of explosive material in an explosive hazard facility.

Section 420.67 remains unchanged from the Launch Site NPRM, and covers quantity determinations and distance requirements for explosive hazard facilities that support the storage or handling of liquid propellants. In addition to applying to distances between an explosive hazard facility and other explosive hazard facilities and public areas, distance requirements may apply within an explosive hazard facility as well.

Liquid propellants are classified and separated differently than solid propellants and other solid explosives. Where solid propellants and other solid explosives are classified by class and division, each liquid propellant is assigned to one of three hazard groups and one of two compatibility groups. A hazard group categorizes liquid propellants according to the hazards they cause. Hazard group 1 represents a fire hazard, hazard group 2 represents a more serious fire hazard, and, because a liquid propellant in hazard group 3 can rupture a storage container, it represents a fragmentation hazard. Each liquid propellant also falls into one of two compatibility groups. Liquid propellants are compatible when storing them together does not increase the probability of an accident or, for a given quantity of propellant, the magnitude of the effects of such an accident. Propellants in the same compatibility group do not increase the probability or magnitude of an accident. Group A represents oxidizers such as LO2 and N2O4, and group C represents fuels such as RP–1 and LH2. Appendix E provides the hazard and compatibility groups for current launch vehicle liquid propellants in table E–3.

Explosive equivalency serves as another source of difference between the treatment of solid explosives and liquid propellants. Only if fuels and oxidizers are to be located within certain distances of each other do the separation requirements designed to account for the hazardous consequences of their potential combination apply. That combination is measured in terms of explosive equivalency. Explosive equivalency for liquid propellants is a measure of the blast effects from explosion of a given quantity of fuel and oxidizer mixture expressed in terms of the weight of TNT that would produce the same blast effects when detonated. Fuels should not be located near oxidizers if possible. The significance of the hazard groups and compatibility groups is that if fuels are located far enough from oxidizers, the minimum distance requirements to public areas and other explosive hazard facilities depend only on the quantity and hazard group of the individual liquid propellants. If operational requirements require fuels and oxidizers to be located near each other, that is, at less than the minimum public area and incompatible distances contained in tables E–4, E–5 and E–6, the explosive equivalency of the incompatible propellants must be calculated and used to determine the distances required by table E–7 to other explosive hazard facilities and public areas.

Appendix E contains four distance tables with separation requirements for liquid propellants. Tables E–4, E–5 and E–6 contain separation distances for hazard groups 1, 2, and 3, respectively. Table E–7 contains separation distances for when fuels and oxidizers are located less than prescribed distances apart so that explosive equivalency applies. Table E–7 contains distances similar to those for explosive division 1.1 solid explosives. This is because the ''explosive equivalency'' of a fuel and oxidizer mixture is measured in terms of its equivalent explosive blast effect to TNT, which is a class 1.1 explosive. Table E–7 also prescribes public area and intraline distances.

Tables E–4, E–5, and E–6 have two distances listed for each quantity of liquid propellant by hazard group. The first, a ''public area and incompatible'' distance, is the minimum distance permitted between a given quantity of liquid propellant and a public area. The distance is also the same distance by which incompatible propellants must be separated (e.g., the minimum distance between a fuel and an oxidizer) for explosive equivalency and table E–7 not to apply to the distance calculations. The second distance, an ''intragroup and compatible'' distance, is the distance by which propellants in the same hazard group, or propellants in the same compatibility group must be separated (e.g. the minimum distance between two fuels) to avoid adding the quantity of each propellant container being separated in calculating distances. This is because if two propellant tanks are far enough apart, they cannot react with one another, even were a mishap to occur. This introduces the third difference between liquid propellant separation requirements and the requirements for solid propellants and other explosives.

The third area where liquid propellant separation requirements are different than those for solid propellants and other explosives may be found in calculations of the quantity of liquid propellant that determines the distance relationship with other explosive hazard facilities and public areas. Quantity calculations may depend on distance. As an example, suppose one was determining the minimum distance required between a tank farm having many containers of fuel, and a launch site boundary. If the containers were all close together the applicant would simply take the total amount of fuel, look up the ''public area and incompatible'' distance in the table that corresponded to the hazard group of the fuel, and ensure that the distance between the closest wall or corner of the explosive hazard facility and the launch site boundary was at least the distance listed in the table. However, if the containers were separated from each other so that the distance between each container met the minimum ''intragroup and compatible'' [25] distance in the table, the total quantity of propellant to be used for the ''public area'' distance determination is only the quantity in each container. Therefore, as discussed below, although quantity determination requirements may be found in section 420.67(a), and section 420.67(b) contains distance determination requirements, quantity determinations for liquid propellants may depend on distances between containers.

Like the procedure for solid propellant quantity and distance determinations, an applicant's first step in siting liquid propellants would be to

[25] The category is called ''intragroup and compatible'' to cover propellants that are in different hazard groups but are still compatible.

determine the quantity of liquid propellant or, if applicable, the explosive equivalent of the liquid propellant to be located in each explosive hazard facility. An applicant determines this through three steps specified in section 420.67(a). First, section 420.67(a)(1) requires that the quantity of propellant in a tank, drum, cylinder, or other container is the net weight in pounds of the propellant in that container. The weight of liquid propellant in associated piping must be included in the determination of quantity to any point where positive means, such as shutoff valves, are provided for interrupting the flow through the pipe, or for interrupting a reaction in the pipe in the event of a mishap.

Next, section 420.67(a)(2) applies when two or more containers of compatible propellants are stored together in an explosive hazard facility. When liquid propellants are compatible, the quantity of propellant used to determine the minimum separation distance between the explosive hazard facility and other explosive hazard facilities and public areas shall be the total quantity of liquid propellant in all containers unless either the containers are separated one from the other by the ''intragroup and compatible'' distance contained in appendix E, table E–4, E–5 or E–6, depending on the hazard group, or the containers are subdivided by intervening barriers to prevent their mixing. In those two cases, the quantity of propellant in the explosive hazard facility requiring the greatest separation distance must be used to determine the minimum separation distance between the explosive hazard facility and all other explosive hazard facilities and public areas.

Finally, section 420.67(a)(3) applies to quantity determinations when two or more containers of incompatible liquid propellants are stored together in an explosive hazard facility. If each container is not separated from every other container by the ''public area and incompatible'' distances identified in appendix E, tables E–4, E–5 and E–6, an applicant must determine the total quantity of explosives by calculating the explosive equivalent in pounds of the combined liquids, using formulas contained in table E–2, to determine the minimum separation distance between the explosive hazard facility and other explosive hazard facilities and public areas. If the containers are, in fact, to be separated one from the other by the appropriate ''incompatible'' distance, an applicant would determine the minimum separation distance to another explosive hazard facility or public area using the quantity of propellant within the explosive hazard facility requiring the greatest separation distance.

Section 420.67(a)(4) requires an applicant to convert liquid propellant quantities from gallons to pounds using conversion factors in table E–3, and the equation provided.

After an applicant has determined the quantity of liquid propellant or, if applicable, the explosive equivalent of the liquid propellants to be located in each explosive hazard facility, an applicant must then determine the separation distances between each explosive hazard facility and public areas. Section 420.67(b) specifies the rules by which an applicant determines the separation distances between propellants within explosive hazard facilities, and between explosive hazard facilities and public areas. An applicant would first use table E–3 to determine hazard and compatibility groups. An applicant would then separate propellants from each other and from each public area using at least the distances provided by tables E–4 through E–7.

Section 420.67(b)(1) requires that an applicant measure minimum separation distances from the container, building, or positive cutoff point in piping which is closest to each public area or explosive hazard facility requiring separation.

Section 420.67(b)(2) imposes a minimum separation distance between compatible propellants. An applicant measures the separation distance between compatible propellants using the ''intragroup and compatible'' distance for the propellant quantity and group that requires the greater distance prescribed by tables E–4, E–5, and E–6. The distance between any two propellants is computed by first determining what the minimum required distance is for each propellant based on the quantity and hazard group of that propellant. The one requiring the greater distance is controlling for the pair.

Section 420.67(b)(3) applies to the minimum separation distance between incompatible propellants. An applicant must measure the separation distance between propellants of different compatibility groups using the ''public area and incompatible'' distance for the propellant quantity and group that requires the greater distance prescribed by tables E–4, E–5, and E–6, unless the propellants of different compatibility groups are subdivided by intervening barriers to prevent their mixing. If intervening barriers are to be present, the minimum separation distance shall then be the ''intragroup and compatible'' distance for the propellant quantity and group that requires the greater distance prescribed by tables E–4, E–5, and E–6.

Section 420.67(b)(4) applies to the separation of liquid propellants from public areas. A launch site operator shall separate these propellants from public areas using no less than the ''public area'' distance prescribed by tables E–4, E–5, and E–6.

Section 420.67(b)(5) applies to propellants where explosive equivalents apply prescribed by subparagraph (a)(3). A launch site operator shall separate each explosive hazard facility that will contain propellants where explosive equivalents apply from all other explosive hazard facilities that are under the control of the same customer using at least the intraline distance in table E–7. The minimum separation distance from public areas is the public area distance in table E–7.

Section 420.69 specifies the rules to be used when solid and liquid propellants are located together, such as at launch pads and test stands. This provision has changed since the Launch Site NPRM. The Launch Site NPRM allowed applicants to site an explosive hazard facility where solid and liquid propellants were to be located together based on either the liquid propellants or solid propellants alone. As discussed in the comments section above, this is not always appropriate.

Section 420.69 now provides three options for a launch site operator proposing an explosive hazard facility where solid and liquid propellants are to be located together. First, an applicant may determine the minimum separation distances required for the liquid propellants and then add the minimum separation distances required for the solid propellants, treating the solid propellants as explosive division 1.1.

The second option is similar in that a launch site operator would determine the minimum separation distances required for the liquid propellants and then add the minimum separation distances required for the solid propellants. However, in this option, a launch site operator that knows the explosive equivalent of the explosive division 1.3 solid propellants may use it instead of treating the solid propellants as explosive division 1.1.

The third option for a launch site operator is to conduct an analysis of the maximum credible event (MCE), or the worst case explosion that is expected to occur. If it shows that an explosion due to the liquid propellants will not cause a simultaneous explosion of the solid propellants, and an explosion due to the

solid propellants will not cause a simultaneous explosion of the liquid propellants, the distance between the explosive hazard facility and all other explosive hazard facilities and public areas should be based on the MCE.

Section 420.71(a) requires a launch site operator to ensure that the public is not exposed to hazards due to the initiation of explosives by lightning. Unless an explosive hazard facility has a lightning warning system to permit termination of operations and withdrawal of the public to public area distance prior to the incidence of an electrical storm, or the explosive hazard facility is to contain explosives that cannot be initiated by lightning, it must have a lightning protection system to ensure explosives are not initiated by lightning. A lightning protection system shall include an air terminal to intentionally attract a lightning strike, a low impedance path—called a down conductor—connecting an air terminal to an Earth electrode system, and an Earth electrode system to dissipate the current from a lightning strike to ground.

A lightning protection system shall also include measures for bonding and surge protection. For bonding, all metallic bodies shall be bonded to ensure that voltage potentials due to lightning are equal everywhere in the explosive hazard facility. Fences within six feet of the lightning protection system shall have bonds across gates and other discontinuations and shall be bonded to the lightning protection system. Railroad tracks that run within six feet of the lightning protection system shall be bonded to the lightning protection system. For surge protection, a lightning protection system shall include surge protection for all metallic power, communication, and instrumentation lines coming into an explosive hazard facility to reduce transient voltages due to lightning to a harmless level.

Lightning protection systems shall be visually inspected semiannually and shall be tested once each year for electrical continuity and adequacy of grounding. A record of results obtained from the tests, including action taken to correct deficiencies noted, must be maintained at the explosive hazard facility.

Section 420.71(b) requires a launch site operator to ensure that electric power lines on the launch site meet the distance requirements provided. A full discussion of explosive hazard mitigation measures is provided in the general preamble above.

Paperwork Reduction Act

This rule contains an information collection requirement. As required by the Paperwork Reduction Act of 1995, (44 U.S.C. 3507(d), the U.S. Department of Transportation submitted the information collection requirements to the Office of Management and Budget (OMB) for its review and assignment of an OMB control number. The agency received no comments on the paperwork burden. According to the regulations implementing the Paperwork Reduction Act of 1995 (5 CFR 1320.8(b)(2)(vi), an agency may not conduct or sponsor, and a person is not required to respond to a collection of information unless an agency displays a currently valid OMB control number. The OMB control number for this information collection is 2120–0644.

Regulatory Evaluation Summary

Final changes to Federal regulations must undergo several economic analyses. First, Executive Order 12866 directs each Federal agency to propose or adopt a regulation only if the agency makes a reasoned determination that the benefits of the intended regulation justify its costs. Second, the Regulatory Flexibility Act of 1980 requires agencies to analyze the economic impact of regulatory changes on small entities. Third, the Trade Agreements Act (19 U.S.C. section 2531–2533) prohibits agencies from setting standards that create unnecessary obstacles to the foreign commerce of the United States. In developing U.S. standards, this Trade Act requires agencies to consider international standards. Where appropriate, agencies are directed to use those international standards as the basis of U.S. standards. And fourth, the Unfunded Mandates Reform Act of 1995 requires agencies to prepare a written assessment of the costs, benefits and other effects of proposed or final rules. This requirement applies only to rules that include a Federal mandate on State, local or tribal governments or the private sector, likely to result in a total expenditure of $100 million or more in any one year (adjusted for inflation.)

In conducting these analyses, FAA has determined this rule: (1) Has benefits which do justify its costs, is not a ''significant regulatory action'' as defined in the Executive Order; (2) will not have a significant impact on a substantial number of small entities; (3) does not affect international trade; and (4) does not impose an unfunded mandate on state, local, or tribal governments, or on the private sector.

The FAA has placed these analyses in the docket and summarized them below. The Federal Aviation Administration (FAA) is amending its commercial space licensing regulations to add licensing requirements for the operation of a launch site. The final rule will provide launch site operators with licensing and operating requirements to protect the public from the risks associated with operations at a launch site. The FAA currently issues licenses to launch site operators on a case-by-case approach. Elements of that approach are reflected in the guidelines, ''Site Operators License Guidelines for Applicants,'' which describe the information that applicants provide the FAA for a license to operate a launch site. The FAA's interpretation and implementation of the guidelines constitute another element of the case-by-case approach and additional elements, such as policy review, not reflected in the guidelines.

The final rule represents quantifiable changes in costs compared to the guidelines (current practice) in the following two areas. They are the launch site location review and approval and the launch site operations review and approval. The FAA has estimated the costs and cost savings of these changes under two different cost scenarios over a 10-year period discounted at 7 percent in 2000 dollars. The total 10-year undiscounted cost savings is estimated to be between $93,000 and $172,000 (or between $65,000 and $124,000, discounted). The most burdensome cost scenario (where net cost savings is the least) to the industry will result in the costs to the launch site operators of $3,000 (or $2,000, discounted) for the launch site location reviews and approval provisions and a cost savings of $12,000 (or $9,000, discounted) for the launch site operations review and approval provisions. Although there will be no cost impact to the FAA, there will be cost savings to the FAA from the most burdensome cost scenario of $114,000 or $84,000 discounted.

There are significant nonquantifiable benefits in two areas. First, the final rule eliminates overlapping responsibilities. Second, the final rule provides increased details and specificity, which are not present in the guidelines.

Regulatory Flexibility Determination

The Regulatory Flexibility Act of 1980 (RFA) establishes ''as a principle of regulatory issuance that agencies shall endeavor, consistent with the objective of the rule and of applicable statutes, to fit regulatory and informational requirements to the scale of the business, organizations, and governmental jurisdictions subject to regulation.'' To achieve that principle,

the Act requires agencies to solicit and consider flexible regulatory proposals and to explain the rationale for their actions. The Act covers a wide-range of small entities, including small businesses, not-for-profit organizations and small governmental jurisdictions.

Agencies must perform a review to determine whether a proposed or final rule will have a significant economic impact on a substantial number of small entities. If the determination is that it will, the agency must prepare a regulatory flexibility analysis as described in the Act.

However, if an agency determines that a proposed or final rule is not expected to have a significant economic impact on a substantial number of small entities, section 605(b) of the 1980 act provides that the head of the agency may so certify and an regulatory flexibility analysis is not required. The certification must include a statement providing the factual basis for this determination, and the reasoning should be clear.

Potentially Affected Entities

Entities who are licensed, or have begun the licensing process, were contacted to determine their size and to gain insight into the impacts of the final regulations on the licensing process. Spaceport Florida Authority (SFA), Spaceport Systems International, L.P. (SSI), the Virginia Commonwealth Space Flight Authority (VCSFA), and the Alaska Aerospace Development Corporation (AADC) are all licensed to operate launch sites.

The Virginia Commonwealth Space Flight Authority (VCSFA) is a not-for-profit subdivision of the Commonwealth of Virginia, responsible for oversight of the activities of the Virginia Commercial Space Flight Center (VCSFC). The VCSFC is located within the boundaries of the Wallops Flight Facility (WFF). As a subdivision of the Commonwealth of Virginia, the VCSFA is empowered by the Acts of the General Assembly to do all things necessary to carry out its mission of stimulating economic growth and education through commercial aerospace activities.

The Spaceport Florida Authority (SFA) was created by Florida's Governor and Legislature as the nation's first state government space agency. The authority was established to develop space-related enterprise, including launch activities, industrial development and education-related projects. SFA operates Spaceport Florida (SPF), located on Cape Canaveral Air Station.

Launch site operator California Spaceport is located on Vandenberg Air Force Base. The launch site is operated and managed by Spaceport Systems International, L.P. who is in partnership with ITT Federal Services Corporation (ITT FSC). ITT FSC is one of the largest U.S.-based technical and support services contractors in the world.

The Kodiak Launch Complex is being built by the Alaska Aerospace Development Corporation. AADC is a public corporation created by the State of Alaska to develop aerospace related economic and technical opportunities for the state.

Definition of Small Entities

The Small Business Administration has defined small business entities relating to space vehicles [SIC codes 3761, 3764 and 3769] as entities comprising fewer than 1000 employees. Although the above mentioned entities have fewer than 1000 employees in their immediate segment of the business, they are affiliated with/or funded by state governments and large parent companies. The VCSFA is a not-for-profit subdivision of the Commonwealth of Virginia; the SFA is a government space agency; the SSI is affiliated with ITT FSC; and AADC is a government sponsored corporation.

The FAA conducted the required review of this final rule and determined that they will not have a significant economic impact on a substantial number of small entities. Accordingly, pursuant to the regulatory Flexibility Act, U.S.C. 605(b), the Federal Aviation Administration certifies that this rule will not have a significant economic impact on a substantial number of small entities.

International Trade Impact Assessment

The Trade Agreement Act of 1979 prohibits Federal agencies from engaging in any standards or related activities that create unnecessary obstacles to the foreign commerce of the United States. Legitimate domestic objectives, such as safety, are not considered unnecessary obstacles. The statute also requires consideration of international standards and where appropriate, that they be the basis for U.S. standards. In addition, consistent with the Administration's belief in the general superiority and desirability of free trade, it is the policy of the Administration to remove or diminish to the extent feasible, barriers to international trade, including both barriers affecting the export of American goods and services to foreign countries and barriers affecting the import of foreign goods and services into the United States.

The Licensing and Safety Requirements for Operation of a Launch Site (14 CFR part 420) will not constitute a barrier to international trade, including the export of U.S. goods and services out of the United States. The final rule affects launch sites that are currently located or being proposed within the United States.

The final rule is not expected to affect trade opportunities for U.S. firms doing business overseas or for foreign firms doing business in the United States.

Unfunded Mandates Reform Act Assessment

The Unfunded Mandates Reform Act of 1995 (the Act), enacted as Pub. L. 104–4 on March 22, 1995, is intended, among other things, to curb the practice of imposing unfunded Federal mandates on State, local, and tribal governments.

Title II of the Act requires each Federal agency to prepare a written statement assessing the effects of any Federal mandate in a proposed or final agency rule that may result in a $100 million or more expenditure (adjusted annually for inflation) in any one year by State, local, and tribal governments, in the aggregate, or by the private sector; such a mandate is deemed to be a ''significant regulatory action.''

This final rule does not meet the cost thresholds described above. Furthermore, this final rule will not impose a significant cost or uniquely affect small governments. Therefore, the requirements of Title II of the Unfunded Mandates Reform Act of 1995 do not apply.

Executive Order 13132, Federalism

The FAA has analyzed this final rule under the principles and criteria of Executive Order 13132, Federalism. We determined that this action will not have a substantial direct effect on the States, or the relationship between the national Government and the States, or on the distribution of power and responsibilities among the various levels of government. Therefore, we determined that this final rule does not have federalism implications.

Environmental Assessment

FAA Order 1050.1D defines FAA actions that may be categorically excluded from preparation of a National Environmental Policy Act (NEPA) environmental assessment (EA) or environmental impact statement (EIS). In accordance with FAA Order 1050.1D, appendix 4, paragraph 4(i), regulatory documents which cover administrative or procedural requirements qualify for a categorical exclusion. Sections in subpart B of part 420 would require an applicant to submit sufficient environmental information for the FAA

to comply with NEPA and other applicable environmental laws and regulations during the processing of each license application. Accordingly, the FAA proposes that this rule qualifies for a categorical exclusion because no significant impacts to the environment are expected to result from finalization or implementation of its administrative provisions for licensing.

Energy Impact

The energy impact of the rulemaking action has been assessed in accordance with the Energy Policy and Conservation Act (EPCA) and Public Law 94–163, as amended (42 U.S.C. 6362). It has been determined that it is not a major regulatory action under the provisions of the EPCA.

List of Subjects in 14 CFR Parts 401, 417, and 420

Confidential business information, Environmental protection, Organization and functions, Reporting and recordkeeping requirements, Rockets, Space transportation and exploration.

The Amendment

In consideration of the foregoing, the Federal Aviation Administration amends Chapter III of Title 14 of the Code of Federal Regulations to read as follows:

PART 401—ORGANIZATION AND DEFINITIONS

1. The authority citation for part 401 continues to read as follows:

Authority: 49 U.S.C. 70101–70121.

§ 401.5 [Amended]

2. Section 401.5 is amended by adding the words ''launch site accident,'' after the word ''incident.''

PART 417—[REMOVED AND RESERVED]

3. Part 417 is removed and reserved.

4. Subchapter C of Chapter III, title 14, Code of Federal Regulations, is amended by adding a new part 420 to read as follows:

PART 420—LICENSE TO OPERATE A LAUNCH SITE

Subpart A—General

Sec.
420.1 Scope.
420.3 Applicability.
420.5 Definitions.
420.6–420.14 [Reserved]

Subpart B—Criteria and Information Requirements for Obtaining a License

420.15 Information requirements.
420.17 Bases for issuance of a license.
420.19 Launch site location review—general.
420.21 Launch site location review—launch site boundary.
420.23 Launch site location review—flight corridor.
420.25 Launch site location review—risk analysis.
420.27 Launch site location review—information requirements.
420.29 Launch site location review for unproven launch vehicles.
420.31 Agreements.
420.32—420.40 [Reserved]

Subpart C—License Terms and Conditions

420.41 License to operate a launch site—general.
420.43 Duration.
420.45 Transfer of a license to operate a launch site.
420.47 License modification.
420.49 Compliance monitoring.

Subpart D—Responsibilities of a Licensee

420.51 Responsibilities—general.
420.53 Control of public access.
420.55 Scheduling of launch site operations.
420.57 Notifications.
420.59 Launch site accident investigation plan.
420.61 Records.
420.63 Explosive siting.
420.65 Handling of solid propellants.
420.67 Storage or handling of liquid propellants.
420.69 Solid and liquid propellants located together.
420.71 Lightning protection.
Appendix A to Part 420—Method for Defining a Flight Corridor
Appendix B to Part 420—Method for Defining a Flight Corridor
Appendix C to Part 420—Risk Analysis
Appendix D to Part 420—Impact Dispersion Areas and Casualty Expectancy Estimate for Unguided Suborbital Launch Vehicles
Appendix E to Part 420—Tables for Explosive Site Plan

Authority: 49 U.S.C. 70101–70121.

Subpart A—General

§ 420.1 Scope.

This part prescribes the information and demonstrations that must be provided to the FAA as part of a license application, the bases for license approval, license terms and conditions, and post-licensing requirements with which a licensee shall comply to remain licensed. Requirements for preparing a license application are contained in part 413 of this subchapter.

§ 420.3 Applicability.

This part applies to any person seeking a license to operate a launch site or to a person licensed under this part. A person operating a site that only supports amateur rocket activities, as defined in 14 CFR 401.5, does not need a license under this part to operate the site.

§ 420.5 Definitions.

For the purpose of this part.

Ballistic coefficient means the weight of an object divided by the quantity product of the coefficient of drag of the object and the area of the object.

Compatibility means the chemical property of materials that may be located together without increasing the probability of an accident or, for a given quantity, the magnitude of the effects of such an accident.

Debris dispersion radius (D_{max}) means the estimated maximum distance from a launch point that debris travels given a worst-case launch vehicle failure and flight termination early in flight. For an expendable launch vehicle, flight termination is assumed to occur at 10 seconds into flight.

Downrange area means a portion of a flight corridor beginning where a launch area ends and ending 5,000 nautical miles from the launch point, or where the IIP leaves the surface of the Earth, whichever is shorter, for an orbital launch vehicle; and ending with an impact dispersion area for a guided sub-orbital launch vehicle.

E,F,G coordinate system means an orthogonal, Earth-fixed, geocentric, right-handed system. The origin of the coordinate system is at the center of an ellipsoidal Earth model. The E-axis is positive directed through the Greenwich meridian. The F-axis is positive directed though 90 degrees east longitude. The EF-plane is coincident with the ellipsoidal Earth model's equatorial plane. The G-axis is normal to the EF-plane and positive directed through the north pole.

E,N,U coordinate system means an orthogonal, Earth-fixed, topocentric, right-handed system. The origin of the coordinate system is at a launch point. The E-axis is positive directed east. The N-axis is positive directed north. The EN-plane is tangent to an ellipsoidal Earth model's surface at the origin and perpendicular to the geodetic vertical. The U-axis is normal to the EN-plane and positive directed away from the Earth.

Effective casualty area (A_c) means the aggregate casualty area of each piece of debris created by a launch vehicle failure at a particular point on its trajectory. The effective casualty area for each piece of debris is the area within which 100 percent of the unprotected population on the ground are assumed to be a casualty, and outside of which 100 percent of the population are assumed not to be a casualty. An effective casualty area accounts for the

characteristics of the debris piece, including its size, the path angle of its trajectory, impact explosions, and debris skip, splatter, and bounce. An effective casualty area also accounts for the size of a person.

Explosive means any chemical compound or mechanical mixture that, when subjected to heat, impact, friction, detonation or other suitable initiation, undergoes a rapid chemical change that releases large volumes of highly heated gases that exert pressure in the surrounding medium. The term applies to materials that either detonate or deflagrate.

Explosive division means the division within hazard class 1 of an explosive as defined in the United Nations Organization classification system for transport of dangerous goods, and as determined in accordance with 49 CFR part 173, subpart C.

Explosive equivalent means a measure of the blast effects from explosion of a given quantity of material expressed in terms of the weight of trinitrotoluene (TNT) that would produce the same blast effects when detonated.

Explosive hazard facility means a facility at a launch site where solid propellant, liquid propellant, or other explosives are stored or handled.

Flight azimuth means the initial direction in which a launch vehicle flies relative to true north expressed in degrees-decimal-degrees.

Flight corridor means an area on the Earth's surface estimated to contain the hazardous debris from nominal flight of a launch vehicle, and non-nominal flight of a launch vehicle assuming a perfectly functioning flight termination system or other flight safety system.

Guided suborbital launch vehicle means a suborbital rocket that employs an active guidance system.

Hazard class means the class of an explosive as defined by the United Nations Organization classification system for transport of dangerous goods, and as determined in accordance with 49 CFR part 173, subpart C.

Impact dispersion area means an area representing an estimated three standard deviation dispersion about a nominal impact point of an intermediate or final stage of a suborbital launch vehicle.

Impact dispersion factor means a constant used to estimate, using a stage apogee, a three standard deviation dispersion about a nominal impact point of an intermediate or final stage of a suborbital launch vehicle.

Impact dispersion radius (R_i) means a radius that defines an impact dispersion area.

Impact range means the distance between a launch point and the impact point of a suborbital launch vehicle stage.

Impact range factor means a constant used to estimate, when multiplied by a stage apogee, the nominal impact point of an intermediate or final stage of a suborbital launch vehicle.

Instantaneous impact point (IIP) means an impact point, following thrust termination of a launch vehicle. IIP may be calculated with or without atmospheric drag effects.

Instantaneous impact point (IIP) range rate means a launch vehicle's estimated IIP velocity along the Earth's surface.

Intraline distance means the minimum distance permitted between any two explosive hazard facilities in the ownership, possession or control of one launch site customer.

Launch area means, for a flight corridor defined in accordance with appendix A of this part, the portion of a flight corridor from the launch point to a point 100 nautical miles in the direction of the flight azimuth. For a flight corridor defined in accordance with appendix B of this part, a launch area is the portion of a flight corridor from the launch point to the enveloping line enclosing the outer boundary of the last debris dispersion circle.

Launch point means a point on the Earth from which the flight of a launch vehicle begins, and is defined by its geodetic latitude, longitude and height on an ellipsoidal Earth model.

Launch site accident means an unplanned event occurring during a ground activity at a launch site resulting in a fatality or serious injury (as defined in 49 CFR 830.2) to any person who is not associated with the activity, or any damage estimated to exceed $25,000 to property not associated with the activity.

Net explosive weight (NEW) means the total weight, expressed in pounds, of explosive material or explosive equivalency contained in an item.

Nominal means, in reference to launch vehicle performance, trajectory, or stage impact point, a launch vehicle flight where all launch vehicle aerodynamic parameters are as expected, all vehicle internal and external systems perform as planned, and there are no external perturbing influences (e.g., winds) other than atmospheric drag and gravity.

Overflight dwell time means the period of time it takes for a launch vehicle's IIP to move past a populated area. For a given populated area, the overflight dwell time is the time period measured along the nominal trajectory IIP ground trace from the time point whose normal with the trajectory intersects the most uprange part of the populated area to the time point whose normal with the trajectory intersects the most downrange part of the populated area.

Overflight exclusion zone means a portion of a flight corridor which must remain clear of the public during the flight of a launch vehicle.

Populated area means a land area with population.

Population density means the number of people per unit area in a populated area.

Position data means data referring to the current position of a launch vehicle with respect to flight time expressed through the X, Y, Z coordinate system.

Public means people and property that are not involved in supporting a licensed launch, and includes those people and property that may be located within the boundary of a launch site, such as visitors, any individual providing goods or services not related to launch processing or flight, and any other launch operator and its personnel.

Public area means any area outside a hazard area and is an area that is not in the possession, ownership or other control of a launch site operator or of a launch site customer who possesses, owns or otherwise controls that hazard area.

Public area distance means the minimum distance permitted between a public area and an explosive hazard facility.

Public traffic route distance means the minimum distance permitted between a public highway or railroad line and an explosive hazard facility.

Trajectory means the position and velocity components as a function of time of a launch vehicle relative to an x, y, z coordinate system, expressed in x, y, z, x, y, z.

Unguided sub-orbital launch vehicle means a sub-orbital rocket that does not have a guidance system.

X, Y, Z coordinate system means an orthogonal, Earth-fixed, topocentric, right-handed system. The origin of the coordinate system is at a launch point. The x-axis coincides with the initial launch azimuth and is positive in the downrange direction. The y-axis is positive to the left looking downrange. The xy-plane is tangent to the ellipsoidal earth model's surface at the origin and perpendicular to the geodetic vertical. The z-axis is normal to the xy-plane and positive directed away from the earth.

ϕ_0, λ_0, h_0 means a latitude, longitude, height system where ϕ_0 is the geodetic latitude of a launch point, λ_0 is the east

longitude of the launch point, and h_0 is the height of the launch point above the reference ellipsoid. ϕ_0 and λ_0 are expressed in degrees-decimal-degrees.

§§ 420.6–420.14 [Reserved]

Subpart B—Criteria and Information Requirements for Obtaining a License

§ 420.15 Information requirements.

(a) General. (1) *Launch site operator.* An applicant shall identify the name and address of the applicant, and the name, address, and telephone number of any person to whom inquiries and correspondence should be directed.

(2) *Launch site.* An applicant shall provide the name and location of the proposed launch site and include the following information:

(i) A list of downrange equipment;

(ii) A description of the layout of the launch site, including launch points;

(iii) The types of launch vehicles to be supported at each launch point;

(iv) The range of launch azimuths planned from each launch point; and

(v) The scheduled operational date.

(3) *Foreign ownership.* Identify foreign ownership of the applicant, as follows:

(i) For a sole proprietorship or partnership, all foreign owners or partners;

(ii) For a corporation, any foreign ownership interest of 10 percent or more; and

(iii) For a joint venture, association, or other entity, any foreign entities participating in the entity.

(b) *Environmental.* An applicant shall provide the FAA with information for the FAA to analyze the environmental impacts associated with the operation of the proposed launch site. The information provided by an applicant must be sufficient to enable the FAA to comply with the requirements of the National Environment Policy Act, 42 U.S.C. 4321 *et seq.* (NEPA), the Council on Environmental Quality Regulations for Implementing the Procedural Provisions of NEPA, 40 CFR parts 1500–1508, and the FAA's Procedures for Considering Environmental Impacts, FAA Order 1050.1D. An applicant shall submit environmental information concerning a proposed launch site not covered by existing environmental documentation, and other factors as determined by the FAA.

(c) *Launch site location.* (1) Except as provided by paragraph (c)(2) of this section, an applicant shall provide the information necessary to demonstrate compliance with §§ 420.19–420.29.

(2) An applicant who is proposing to locate a launch site at an existing launch point at a federal launch range is not required to comply with paragraph (c)(1) of this section if a launch vehicle of the same type and class as proposed for the launch point has been safely launched from the launch point.

(d) *Explosive site plan.* (1) Except as provided by paragraph (d)(2) of this section, an applicant shall submit an explosive site plan that complies with §§ 420.63, 420.65, 420.67, and 420.69.

(2) If an applicant plans to operate a launch site located on a federal launch range, and if the applicant is required by the federal launch range to comply with the federal launch range's explosive safety requirements, the applicant shall submit the explosive site plan submitted to the federal launch range.

(e) *Launch site operations.* An applicant shall provide the information necessary to demonstrate compliance with the requirements of §§ 420.53, 420.55, 420.57, 420.59, 420.61, and 420.71.

§ 420.17 Bases for issuance of a license.

(a) The FAA will issue a license under this part when the FAA determines that:

(1) The application provides the information required by § 420.15;

(2) The FAA has completed an analysis of the environmental impacts associated with the proposed operation of the launch site, in accordance with NEPA, 40 CFR parts 1500–1508, and FAA Order 1050.1D;

(3) The launch site location meets the requirements of §§ 420.19, 420.21, 420.23, 420.25, 420.27, and 420.29;

(4) The applicant has completed the agreements required by § 420.31;

(5) The application demonstrates that the applicant shall satisfy the requirements of §§ 420.53, 420.55, 420.57, 420.59, 420.61 and 420.71;

(6) The explosive site plan meets the criteria of §§ 420.63, 420.65, 420.67 and 420.69; and

(7) Issuing a license would not jeopardize foreign policy or national security interests of the United States.

(b) The FAA advises an applicant, in writing, of any issue arising during an application review that would lead to denial. The applicant may respond in writing, submit additional information, or amend its license application.

§ 420.19 Launch site location review—general.

(a) To gain approval for a launch site location, an applicant shall demonstrate that for each launch point proposed for the launch site, at least one type of expendable or reusable launch vehicle can be flown from the launch point safely. For purposes of the launch site location review:

(1) A safe launch must possess a risk level estimated, in accordance with the requirements of this part, not to exceed an expected average number of 0.00003 casualties (E_c) to the collective member of the public exposed to hazards from the flight ($E_c \leq 30 \times 10^{-6}$).

(2) Types of launch vehicles include orbital expendable launch vehicles, guided sub-orbital expendable launch vehicles, unguided sub-orbital expendable launch vehicles, and reusable launch vehicles. Orbital expendable launch vehicles are further classified by weight class, based on the weight of payload the launch vehicle can place in a 100-nm orbit, as defined in table 1.

(b) If an applicant proposes to have more than one type of launch vehicle flown from a launch point, the applicant shall demonstrate that each type of expendable or reusable launch vehicle planned to be flown from the launch point can be flown from the launch point safely.

(c) If an applicant proposes to have more than one weight class of orbital expendable launch vehicles flown from a launch point, the applicant shall demonstrate that the heaviest weight class planned to be flown from the launch point can be flown from the launch point safely.

TABLE 1 OF § 420.19.—ORBITAL EXPENDABLE LAUNCH VEHICLE CLASSES BY PAYLOAD WEIGHT (LBS)

100 nm orbit	Weight class			
	Small	Medium	Medium large	Large
28 degrees inclination*	≤4400	>4400 to ≤11100	>11100 to ≤18500	>18500
90 degrees inclination	≤3300	>3300 to ≤8400	>8400 to ≤15000	>15000

* 28 degrees inclination orbit from a launch point at 28 degrees latitude.

§ 420.21 Launch site location review—launch site boundary.

(a) The distance from any proposed launch point to the closest launch site boundary must be at least as great as the debris dispersion radius of the largest launch vehicle type and weight class proposed for the launch point.

(b) For a launch site supporting any expendable launch vehicle, an applicant shall use the largest distance provided by table 2 for the type and weight class of any launch vehicle proposed for the launch point.

(c) For a launch site supporting any reusable launch vehicle, an applicant shall determine the debris dispersion radius that represents the maximum distance from a launch point that debris travels given a worst-case launch vehicle failure in the launch area. An applicant must clearly and convincingly demonstrate the validity of its proposed debris dispersion radius.

TABLE 2 OF § 420.21.—MINIMUM DISTANCE FROM LAUNCH POINT TO LAUNCH SITE BOUNDARY (FEET)

Orbital expendable launch vehicle class			Type of suborbital launch vehicle		
Small	Medium	Medium large	Large	Guided	Unguided
7300	9300	10600	13000	8000	1600

§ 420.23 Launch site location review—flight corridor.

(a) *Guided orbital expendable launch vehicle.* For a guided orbital expendable launch vehicle, an applicant shall define a flight corridor that:

(1) Encompasses an area that the applicant estimates, in accordance with the requirements of this part, to contain debris with a ballistic coefficient of ≥ 3 pounds per square foot, from any non-nominal flight of a guided orbital expendable launch vehicle from the launch point to a point 5000 nm downrange, or where the IIP leaves the surface of the Earth, whichever is shorter;

(2) Includes an overflight exclusion zone where the public risk criteria of 30×10^{-6} would be exceeded if one person were present in the open; and

(3) Uses one of the methodologies provided in appendix A or B of this part. The FAA will approve an alternate method if an applicant provides a clear and convincing demonstration that its proposed method provides an equivalent level of safety to that required by appendix A or B of this part.

(b) *Guided sub-orbital expendable launch vehicle.* For a guided sub-orbital expendable launch vehicle, an applicant shall define a flight corridor that:

(1) Encompasses an area that the applicant estimates, in accordance with the requirements of this part, to contain debris with a ballistic coefficient of ≥ 3 pounds per square foot, from any non-nominal flight of a guided sub-orbital expendable launch vehicle from the launch point to impact with the earth's surface;

(2) Includes an impact dispersion area for the launch vehicle's last stage;

(3) Includes an overflight exclusion zone where the public risk criteria of 30×10^{-6} would be exceeded if one person were present in the open; and

(4) Uses one of the methodologies provided in appendices A or B to this part. The FAA will approve an alternate method if an applicant provides a clear and convincing demonstration that its proposed method provides an equivalent level of safety to that required by appendix A or B of this part.

(c) *Unguided sub-orbital expendable launch vehicle.*

(1) For an unguided sub-orbital expendable launch vehicle, an applicant shall define the following using the methodology provided by appendix D of this part:

(i) Impact dispersion areas that the applicant estimates, in accordance with the requirements of this part, to contain the impact of launch vehicle stages from nominal flight of an unguided sub-orbital expendable launch vehicle from the launch point to impact with the earth's surface; and

(ii) An overflight exclusion zone where the public risk criteria of 30×10^{-6} would be exceeded if one person were present in the open.

(2) The FAA will approve an alternate method if an applicant provides a clear and convincing demonstration that its proposed method provides an equivalent level of safety to that required by appendix D of this part.

(3) An applicant shall base its analysis on an unguided suborbital launch vehicle whose final launch vehicle stage apogee represents the intended use of the launch point.

(d) *Reusable launch vehicle.* For a reusable launch vehicle, an applicant shall define a flight corridor that contains the hazardous debris from nominal and non-nominal flight of a reusable launch vehicle. The applicant must provide a clear and convincing demonstration of the validity of its flight corridor.

§ 420.25 Launch site location review—risk analysis.

(a) If a flight corridor or impact dispersion area defined by section 420.23 contains a populated area, the applicant shall estimate the casualty expectation associated with the flight corridor or impact dispersion area. An applicant shall use the methodology provided in appendix C to this part for guided orbital or suborbital expendable launch vehicles and appendix D for unguided suborbital launch vehicles. The FAA will approve an alternate method if an applicant provides a clear and convincing demonstration that its proposed method provides an equivalent level of safety to that required by appendix C or D of this part. For a reusable launch vehicle, an applicant must provide a clear and convincing demonstration of the validity of its risk analysis.

(b) If the estimated expected casualty exceeds 30×10^{-6}, the FAA will not approve the location of the proposed launch point.

§ 420.27 Launch site location review—information requirements.

An applicant shall provide the following launch site location review information in its application:

(a) A map or maps showing the location of each launch point proposed, and the flight azimuth, IIP, flight corridor, and each impact range and impact dispersion area for each launch point;

(b) Each launch vehicle type and any launch vehicle class proposed for each launch point;

(c) Trajectory data;

(d) Wind data, including each month and any percent wind data used in the analysis;

(e) Any launch vehicle apogee used in the analysis;

(f) Each populated area located within a flight corridor or impact dispersion area;

(g) The estimated casualty expectancy calculated for each populated area within a flight corridor or impact dispersion area;

(h) The effective casualty areas used in the analysis;

(i) The estimated casualty expectancy for each flight corridor or set of impact dispersion areas; and

(j) If populated areas are located within an overflight exclusion zone, a demonstration that there are times when the public is not present or that the applicant has an agreement in place to evacuate the public from the overflight exclusion zone during a launch.

§ 420.29 Launch site location review for unproven launch vehicles.

An applicant for a license to operate a launch site for an unproven launch vehicle shall provide a clear and convincing demonstration that its proposed launch site location provides an equivalent level of safety to that required by this part.

§ 420.31 Agreements.

(a) Except as provided by paragraph (c) of this section, an applicant shall complete an agreement with the local U.S. Coast Guard district to establish procedures for the issuance of a Notice to Mariners prior to a launch and other such measures as the Coast Guard deems necessary to protect public health and safety.

(b) Except as provided by paragraph (c) of this section, an applicant shall complete an agreement with the FAA Air Traffic Control (ATC) office having jurisdiction over the airspace through which launches will take place, to establish procedures for the issuance of a Notice to Airmen prior to a launch and for closing of air routes during the launch window and other such measures as the FAA ATC office deems necessary to protect public health and safety.

(c) An applicant that plans to operate a launch site located on a federal launch range does not have to comply with section 420.31 if the applicant is using existing federal launch range agreements with the U.S. Coast Guard and the FAA ATC office having jurisdiction over the airspace through which launches will take place.

§§ 420.32–420.40 [Reserved]

Subpart C—License Terms and Conditions

§ 420.41 License to operate a launch site—general.

(a) A license to operate a launch site authorizes a licensee to operate a launch site in accordance with the representations contained in the licensee's application, with terms and conditions contained in any license order accompanying the license, and subject to the licensee's compliance with 49 U.S.C. subtitle IX, ch. 701 and this chapter.

(b) A license to operate a launch site authorizes a licensee to offer its launch site to a launch operator for each launch point for the type and any weight class of launch vehicle identified in the license application and upon which the licensing determination is based.

(c) Issuance of a license to operate a launch site does not relieve a licensee of its obligation to comply with any other laws or regulations; nor does it confer any proprietary, property, or exclusive right in the use of airspace or outer space.

§ 420.43 Duration.

A license to operate a launch site remains in effect for five years from the date of issuance unless surrendered, suspended, or revoked before the expiration of the term and is renewable upon application by the licensee.

§ 420.45 Transfer of a license to operate a launch site.

(a) Only the FAA may transfer a license to operate a launch site.

(b) The FAA will transfer a license to an applicant who has submitted an application in accordance with 14 CFR part 413, satisfied the requirements of § 420.15, and obtained each approval required by § 420.17 for a license.

(c) The FAA may incorporate by reference any findings made part of the record that supported a prior related licensing determination.

§ 420.47 License modification.

(a) Upon application or upon its own initiative, the FAA may modify a license to operate a launch site at any time by issuing a license order that adds, removes, or modifies a license term or condition to ensure compliance with the Act and the requirements of this chapter.

(b) After a license to operate a launch site has been issued, a licensee shall apply to the FAA for modification of its license if:

(1) The licensee proposes to operate the launch site in a manner that is not authorized by the license; or

(2) The licensee proposes to operate the launch site in a manner that would make any representation contained in the license application that is material to public health and safety or safety of property no longer accurate and complete.

(c) An application to modify a license shall be prepared and submitted in accordance with part 413 of this chapter. The licensee shall indicate any part of its license or license application that would be changed or affected by a proposed modification.

(d) The FAA approves a modification request that satisfies the requirements of this part.

(e) Upon approval of a license modification, the FAA issues either a written approval to the licensee or a license order modifying the license if a stated term or condition of the license is changed, added, or deleted. A written approval has the full force and effect of a license order and is part of the licensing record.

§ 420.49 Compliance monitoring.

A licensee shall allow access by and cooperate with federal officers or employees or other individuals authorized by the FAA to observe any activities of the licensee, its customers, its contractors, or subcontractors, associated with licensed operation of the licensee's launch site.

Subpart D—Responsibilities of a Licensee

§ 420.51 Responsibilities—general.

(a) A licensee shall operate its launch site in accordance with the representations in the application upon which the licensing determination is based.

(b) A licensee is responsible for compliance with 49 U.S.C. Subtitle IX, ch. 701 and for meeting the requirements of this chapter.

§ 420.53 Control of public access.

(a) A licensee shall prevent unauthorized access to the launch site, and unauthorized, unescorted access to explosive hazard facilities or other hazard areas not otherwise controlled by a launch operator, through the use of security personnel, surveillance systems, physical barriers, or other means approved as part of the licensing process.

(b) A licensee shall notify anyone entering the launch site of safety rules and emergency and evacuation procedures prior to that person's entry unless that person has received a briefing on those rules and procedures within the previous year.

(c) A licensee shall employ warning signals or alarms to notify any persons at the launch site of any emergency.

§ 420.55 Scheduling of launch site operations.

(a) A licensee shall develop and implement procedures to schedule operations to ensure that each operation carried out by a customer at the launch site does not create the potential for a mishap that could result in harm to the public because of the proximity of the operations, in time or place, to operations of any other customer. A

customer includes any launch operator, and any contractor, subcontractor or customer of the launch site operator's customer at the launch site.

(b) A licensee shall provide its launch site scheduling requirements to each customer before the customer begins operations at the launch site.

§ 420.57 Notifications.

(a) A licensee shall notify each launch operator and any other customer of any limitations on the use of the launch site. A licensee shall also communicate limitations on the use of facilities provided to customers by the launch site operator.

(b) A licensee shall maintain its agreement, made in accordance with § 420.31(a), with the local U.S. Coast Guard district.

(c) A licensee shall maintain its agreement, made in accordance with § 420.31(b), with the FAA ATC office having jurisdiction over the airspace through which launches will take place.

(d) At least two days prior to flight of a launch vehicle, the licensee shall notify local officials and all owners of land adjacent to the launch site of the flight schedule.

§ 420.59 Launch site accident investigation plan.

(a) *General.* A licensee shall develop and implement a launch site accident investigation plan that contains the licensee's procedures for reporting, responding to, and investigating launch site accidents, as defined by § 420.5, and for cooperating with federal officials in case of a launch accident. The launch site accident investigation plan must be signed by an individual authorized to sign and certify the application in accordance with § 413.7(c) of this chapter.

(b) *Reporting requirements.* A launch site accident investigation plan shall provide for—

(1) Immediate notification to the Federal Aviation Administration (FAA) Washington Operations Center in the event of a launch site accident.

(2) Submission of a written preliminary report to the FAA, Associate Administrator for Commercial Space Transportation, within five days of any launch site accident. The report must include the following information:

(i) Date and time of occurrence;

(ii) Location of the event;

(iii) Description of the event;

(iv) Number of injuries, if any, and general description of types of injuries suffered;

(v) Property damage, if any, and an estimate of its value;

(vi) Identification of hazardous materials, as defined by § 401.5 of this chapter, involved in the event;

(vii) Any action taken to contain the consequences of the event; and

(viii) Weather conditions at the time of the event.

(c) *Response plan.* A launch site accident investigation plan shall contain procedures that—

(1) Ensure the consequences of a launch site accident are contained and minimized;

(2) Ensure data and physical evidence are preserved;

(3) Require the licensee to report to and cooperate with FAA or National Transportation Safety Board (NTSB) investigations and designate one or more points of contact for the FAA or NTSB; and

(4) Require the licensee to identify and adopt preventive measures for avoiding recurrence of the event.

(d) *Investigation plan.* A launch site accident investigation plan must contain—

(1) Procedures for investigating the cause of a launch site accident;

(2) Procedures for reporting launch site accident investigation results to the FAA; and

(3) Delineated responsibilities, including reporting responsibilities for personnel assigned to conduct investigations and for any one retained by the licensee to conduct or participate in investigations.

(e) *Launch accidents.* A launch site accident investigation plan shall contain—

(1) Procedures for participating in an investigation of a launch accident for launches launched from the launch site;

(2) Require the licensee to cooperate with FAA or National Transportation Safety Board (NTSB) investigations of a launch accident for launches launched from the launch site.

(f) *Applicability of other accident investigation procedures.* Accident investigation procedures developed in accordance with 29 CFR 1910.119 and 40 CFR part 68 will satisfy the requirements of paragraphs (c) and (d) of this section to the extent that they include the elements required by paragraphs (c) and (d) of this section.

§ 420.61 Records.

(a) A licensee shall maintain all records, data, and other material needed to verify that its operations are conducted in accordance with representations contained in the licensee's application. A licensee shall retain records for three years.

(b) In the event of a launch or launch site accident, a licensee shall preserve all records related to the event. Records shall be retained until completion of any federal investigation and the FAA advises the licensee that the records need not be retained.

(c) A licensee shall make available to federal officials for inspection and copying all records required to be maintained under the regulations.

§ 420.63 Explosive siting.

(a) Except as otherwise provided by paragraph (b) of this section, a licensee shall ensure that the configuration of the launch site is in accordance with an explosive site plan, and that the licensee's explosive site plan is in compliance with the requirements of §§ 420.65—420.69. The explosive site plan shall include:

(1) A scaled map that shows the location of all proposed explosive hazard facilities at the proposed launch site and that shows actual and minimal allowable distances between each explosive hazard facility and all other explosive hazard facilities and each public area, including the launch site boundary;

(2) A listing of the maximum quantities of liquid and solid propellants and other explosives to be located at each explosive hazard facility, including the class and division for each solid explosive and the hazard and compatibility group for each liquid propellant; and

(3) A description of each activity to be conducted in each explosive hazard facility.

(b) A licensee operating a launch site located on a federal launch range does not have to comply with the requirements in §§ 420.65–420.69 if the licensee is in compliance with the federal launch range's explosive safety requirements.

(c) For explosive siting issues not otherwise addressed by the requirements of §§ 420.65–420.69, a launch site operator must clearly and convincingly demonstrate a level of safety equivalent to that otherwise required by part 420.

§ 420.65 Handling of solid propellants.

(a) A launch site operator shall determine the maximum total quantity of solid propellants and other solid explosives by class and division, in accordance with 49 CFR part 173, Subpart C, to be located in each explosive hazard facility where solid propellants or other solid explosives will be handled.

(b) When explosive divisions 1.1 and 1.3 explosives are located in the same explosive hazard facility, the total quantity of explosive shall be treated as

division 1.1 for quantity-distance determinations; or, a launch site operator may add the net explosive equivalent weight of the division 1.3 items to the net weight of division 1.1 items to determine the total quantity of explosives.

(c) A launch site operator shall separate each explosive hazard facility where solid propellants and other solid explosives are handled from all other explosive hazard facilities, each public area and the launch site boundary by a distance no less than those provided for each quantity and explosive division in appendix E, table E–1.

(d) A launch site operator shall follow the following separation rules:

(1) A launch site operator shall employ no less than the applicable public area distance to separate an explosive hazard facility from each public area and from the launch site boundary.

(2) A launch site operator shall employ no less than an intraline distance to separate an explosive hazard facility from all other explosive hazard facilities used by a single customer.

(3) For explosive division 1.1 only, a launch site operator may employ no less than 60% of the applicable public area distance, or the public traffic route distance, to separate an explosive hazard facility from a public area that consists only of a public highway or railroad line.

(4) A launch site operator may use linear interpolation for NEW quantities between table entries.

(5) A launch site operator shall measure separation distance from the closest debris or explosive hazard source in an explosive hazard facility.

§ 420.67 Storage or handling of liquid propellants.

(a) For an explosive hazard facility where liquid propellants are handled or stored, a launch site operator shall determine the total quantity of liquid propellant and, if applicable pursuant to paragraph (a)(3) of this section, the explosive equivalent of liquid propellant in each explosive hazard facility in accordance with the following:

(1) The quantity of liquid propellant in a tank, drum, cylinder, or other container is the net weight in pounds of the propellant in the container. The determination of quantity shall include any liquid propellant in associated piping to any point where positive means are provided for interrupting the flow through the pipe, or interrupting a reaction in the pipe in the event of a mishap.

(2) Where two or more containers of compatible liquid propellants are handled or stored together in an explosive hazard facility, the total quantity of propellant to determine the minimum separation distance between the explosive hazard facility and all other explosive hazard facilities and each public area shall be the total quantity of liquid propellant in all containers, unless:

(i) The containers are separated one from the other by the appropriate distance as provided by paragraph (b)(2) of this section; or

(ii) The containers are subdivided by intervening barriers, such as diking, that prevent mixing.

(iii) If paragraph (a)(2)(i) or (ii) of this section apply, a launch site operator shall use the quantity of propellant requiring the greatest separation distance pursuant to paragraph (b) of this section to determine the minimum separation distance between the explosive hazard facility and all other explosive hazard facilities and each public area.

(3) Where two or more containers of incompatible liquid propellants will be handled or stored together in an explosive hazard facility, a launch site operator shall determine the explosive equivalent in pounds of the combined liquids, using the formulas provided in appendix E, table E–2, to determine the minimum separation distance between the explosive hazard facility and other explosive hazard facilities and public areas unless the containers are separated one from the other by the appropriate distance as determined in paragraph (b)(3) of this section. A launch site operator shall then use the quantity of liquid propellant requiring the greatest separation distance to determine the minimum separation distance between the explosive hazard facility and all other explosive hazard facilities and each public area.

(4) A launch site operator shall convert quantities of liquid propellants from gallons to pounds using the conversion factors provided in appendix E, table E–3 and the following equation:

Pounds of propellant = gallons x density of propellant (pounds per gallon).

(b) A launch site operator shall use appendix E, table E–3 to determine hazard and compatibility groups and shall separate liquid propellants from each other and from each public area using distances no less than those provided in appendix E, tables E–4 through E–7 in accordance with the following:

(1) A launch site operator shall measure minimum separation distances from the hazard source in an explosive hazard facility, such as a container, building, segment, or positive cutoff point in piping, closest to each explosive hazard facility.

(2) A launch site operator shall measure the minimum separation distance between compatible liquid propellants using the ''intragroup and compatible'' distance for the propellant quantity and hazard group that requires the greater distance prescribed by appendix E, tables E–4, E–5, and E–6.

(3) A launch site operator shall measure the minimum separation distance between liquid propellants of different compatibility groups using the ''public area and incompatible'' distance for the propellant quantity and hazard group that requires the greater distance provided in appendix E, tables E–4, E–5, and E–6, unless the propellants of different compatibility groups are subdivided by intervening barriers that prevent mixing. If such barriers are present, the minimum separation distance shall be the ''intragroup and compatible'' distance for the propellant quantity and group that requires the greater distance provided in appendix E, tables E–4, E–5, and E–6.

(4) A launch site operator shall separate liquid propellants from each public area using a distance no less than the ''public area and incompatible'' distance provided in appendix E, tables E–4, E–5, and E–6.

(5) A launch site operator shall separate each explosive hazard facility that contains liquid propellants where explosive equivalents apply pursuant to paragraph (a)(3) of this section from all other explosive hazard facilities of a single customer using the intraline distance provided in appendix E, table E–7, and from each public area using the public area distance provided in appendix E, table E–7.

§ 420.69 Solid and liquid propellants located together.

(a) A launch site operator proposing an explosive hazard facility where solid and liquid propellants are to be located together shall determine the minimum separation distances between the explosive hazard facility and other explosive hazard facilities and public areas in accordance with one method provided in paragraphs (b), (c), or (d) of this section.

(b) A launch site operator shall determine the minimum separation distances between the explosive hazard facility and all other explosive hazard facilities and public areas required for the liquid propellants in accordance with section 420.67(b)(5), and add the minimum separation distances between

the explosive hazard facility and all other explosive hazard facilities and public areas required for the solid propellants in accordance with section 420.65, treating the solid propellants as explosive division 1.1.

(c) A launch site operator shall determine the minimum separation distances between the explosive hazard facility and all other explosive hazard facilities and public areas required for the liquid propellants in accordance with section 420.67(b)(5), and add the minimum separation distances between the explosive hazard facility and all other explosive hazard facilities and public areas required for the solid propellants in accordance with section 420.65, using the explosive equivalent of the explosive division 1.3.

(d) A launch site operator shall conduct an analysis of the maximum credible event (MCE), or the worst case explosion that is expected to occur. If the MCE shows that there will be no simultaneous explosion reaction of the liquid propellant tanks and the solid propellant motors, then the minimum distance between the explosive hazard facility and all other explosive hazard facilities and public areas must be based on the MCE.

§ 420.71 Lightning protection.

(a) *Lightning protection.* A licensee shall ensure that the public is not exposed to hazards due to the initiation of explosives by lightning.

(1) *Elements of a lighting protection system.* Unless an explosive hazard facility meets the conditions of paragraph (a)(3) of this section, all explosive hazard facilities shall have a lightning protection system to ensure explosives are not initiated by lightning. A lightning protection system shall meet the requirements of this paragraph and include the following:

(i) *Air terminal.* An air terminal to intentionally attract a lightning strike.

(ii) *Down conductor.* A low impedance path connecting an air terminal to an earth electrode system.

(iii) *Earth electrode system.* An earth electrode system to dissipate the current from a lightning strike to ground.

(2) *Bonding and surge protection.* A lightning protection system must meet the requirements of this paragraph and include the following:

(i) *Bonding.* All metallic bodies shall be bonded to ensure that voltage potentials due to lightning are equal everywhere in the explosive hazard facility. Any fence within six feet of a lightning protection system shall have a bond across each gate and other discontinuations and shall be bonded to the lightning protection system. Railroad tracks that run within six feet of the lightning protection system shall be bonded to the lightning protection system.

(ii) *Surge protection.* A lightning protection system shall include surge protection to reduce transient voltages due to lightning to a harmless level for all metallic power, communication, and instrumentation lines entering an explosive hazard facility.

(3) *Circumstances where no lightening protection system is required.* No lightning protection system is required for an explosive hazard facility when a lightning warning system is available to permit termination of operations and withdrawal of the public to public area distance prior to an electrical storm, or for an explosive hazard facility containing explosives that cannot be initiated by lightning. If no lightning protection system is required, a licensee must ensure the withdrawal of the public to a public area distance prior to an electrical storm.

(4) *Testing and inspection.* Lightning protection systems shall be visually inspected semiannually and shall be tested once each year for electrical continuity and adequacy of grounding. A licensee shall maintain at the explosive hazard facility a record of results obtained from the tests, including any action taken to correct deficiencies noted.

(b) *Electrical power lines.* A licensee shall ensure that electric power lines at its launch site meet the following requirements:

(1) Electric power lines shall be no closer to an explosive hazard facility than the length of the lines between the poles or towers that support the lines unless an effective means is provided to ensure that energized lines cannot, on breaking, come in contact with the explosive hazard facility.

(2) Towers or poles supporting electrical distribution lines that carry between 15 and 69 KV, and unmanned electrical substations shall be no closer to an explosive hazard facility than the public area distance for that explosive hazard facility.

(3) Towers or poles supporting electrical transmission lines that carry 69 KV or more, shall be no closer to an explosive hazard facility than the public area distance for that explosive hazard facility.

Issued in Washington, DC on September 29, 2000.

Patricia G. Smith,

Associate Administrator for Commercial Space Transportation.

Appendix A to Part 420—Method for Defining a Flight Corridor

(a) Introduction

(1) This appendix provides a method for constructing a flight corridor from a launch point for a guided suborbital launch vehicle or any one of the four classes of guided orbital launch vehicles from table 1, § 420.19, without the use of local meteorological data or a launch vehicle trajectory.

(2) A flight corridor includes an overflight exclusion zone in a launch area and, for a guided suborbital launch vehicle, an impact dispersion area in a downrange area. A flight corridor for a guided suborbital launch vehicle ends with the impact dispersion area, and, for the four classes of guided orbital launch vehicles, 5000 nautical miles (nm) from the launch point.

(b) Data requirements

(1) Maps. An applicant shall use any map for the launch site region with a scale not less than 1:250,000 inches per inch in the launch area and 1:20,000,000 inches per inch in the downrange area. As described in paragraph (b)(2), an applicant shall use a mechanical method, a semi-automated method, or a fully-automated method to plot a flight corridor on maps. A source for paper maps acceptable to the FAA is the U.S. Dept. of Commerce, National Oceanic and Atmospheric Administration, National Ocean Service.

(i) Projections for mechanical plotting method. An applicant shall use a conic projection. The FAA will accept a ''Lambert-Conformal'' conic projection. A polar aspect of a plane-azimuthal projection may also be used for far northern launch sites.

(ii) Projections for semi-automated plotting method. An applicant shall use cylindrical, conic, or plane projections for semi-automated plotting. The FAA will accept ''Mercator'' and ''Oblique Mercator'' cylindrical projections. The FAA will accept ''Lambert-Conformal'' and ''Albers Equal-Area'' conic projections. The FAA will accept ''Lambert Azimuthal Equal-Area'' and ''Azimuthal Equidistant'' plane projections.

(iii) Projections for fully-automated plotting method. The FAA will accept map projections used by geographical information system software scaleable pursuant to the requirements of paragraph (b)(1).

(2) Plotting Methods.

(i) Mechanical method. An applicant may use mechanical drafting equipment such as pencil, straight edge, ruler, protractor, and compass to plot the location of a flight corridor on a map. The FAA will accept straight lines for distances less than or equal to 7.5 times the map scale on map scales greater than or equal to 1:1,000,000 inches per inch (in/in); or straight lines representing 100 nm or less on map scales less than 1:1,000,000 in/in.

(ii) Semi-automated method. An applicant may employ the range and bearing techniques in paragraph (b)(3) to create

latitude and longitude points on a map. The FAA will accept straight lines for distances less than or equal to 7.5 times the map scale on map scales greater than or equal to 1:1,000,000 inches per inch (in/in); or straight lines representing 100 nm or less on map scales less than 1:1,000,000 in/in.

(iii) Fully-automated method. An applicant may use geographical information system software with global mapping data scaleable in accordance with paragraph (b)(1).

(3) Range and bearing computations on an ellipsoidal Earth model.

(i) To create latitude and longitude pairs on an ellipsoidal Earth model, an applicant shall use the following equations to calculate geodetic latitude (+N) and longitude (+E) given the launch point geodetic latitude (+N), longitude (+E), range (nm), and bearing (degrees, positive clockwise from North).

(A) Input. An applicant shall use the following input in making range and bearing computations. Angle units must be in radians.

$$\phi_1 = \text{Geodetic latitude of launch point (radians)}$$

$$= \phi_1\ (\text{DDD}) \cdot \frac{\pi}{180}\ \text{(radians per degree)}$$

$$\lambda_1 = \text{Longitude of launch point (DDD)}$$

$$= \lambda\ (\text{DDD}) \cdot \frac{\pi}{180}\ \text{(radians per degree)}$$

$$S = \text{Range from launch point (nm)}$$

$$= S\ (\text{DDD}) \cdot \frac{\pi}{180}\ \text{(radians per degree)}$$

$$\alpha_{12} = \text{Azimuth bearing from launch point (deg)}$$

$$= \alpha_{12}(\text{DDD}) \cdot \frac{\pi}{180}\ \text{(radians per degree)}$$

(B) Computations. An applicant shall use the following equations to determine the latitude (ϕ_2) and longitude (λ_2) of a target point situated ''S'' nm from the launch point on an azimuth bearing (α_{12}) degrees.

$$f = 1 - \frac{b}{a} \qquad \text{(Equation A1)}$$

where:

a = WGS–84 semi-major axis (3443.91846652 nmi)

b = WGS–84 semi-minor axis (3432.37165994 nmi)

$$\varepsilon^2 = \frac{\left(a^2 - b^2\right)}{b^2} \qquad \text{(Equation A2)}$$

$$\theta = \frac{S}{b}\ \text{(radians)} \qquad \text{(Equation A3)}$$

$$\beta_1 = \tan^{-1}\left[\frac{\left(b \cdot \sin\phi_1\right)}{\left(a \cdot \cos\phi_1\right)}\right] \qquad \text{(Equation A4)}$$

$$g = \left(\cos\beta_1\right)\left(\cos\alpha_{12}\right) \qquad \text{(Equation A5)}$$

$$h = \left(\cos\beta_1\right)\left(\sin\alpha_{12}\right) \qquad \text{(Equation A6)}$$

$$m = \frac{\left[1 + \left(\frac{\varepsilon^2}{2}\right)\sin^2\beta_1\right]\left[1 - h^2\right]}{2} \qquad \text{(Equation A7)}$$

$$n = \frac{\left[1+\left(\frac{\varepsilon^2}{2}\right)\sin^2\beta_1\right]\left[\left(\sin^2\beta_1\right)(\cos\theta)+g\cdot\left(\sin\beta_1\right)(\sin\theta)\right]}{2} \qquad \text{(Equation A8)}$$

$$L = h\cdot\left[-f\cdot\theta+3\cdot f^2\cdot n\cdot\sin\theta+\frac{3\cdot f^2\cdot m\cdot(\theta-\sin\theta\cdot\cos\theta)}{2}\right]\text{(radians)} \qquad \text{(Equation A9)}$$

$$M = m\cdot\varepsilon^2 \qquad \text{(Equation A10)}$$

$$N = n\cdot\varepsilon^2 \qquad \text{(Equation A11)}$$

$$A_1 = N\cdot\sin\theta \qquad \text{(Equation A12)}$$

$$A_2 = \left(\frac{M}{2}\right)\left(\sin\theta\cdot\cos\theta-\theta\right) \qquad \text{(Equation A13)}$$

$$A_3 = \left(\frac{5}{2}\right)\left(N^2\cdot\sin\theta\cdot\cos\theta\right) \qquad \text{(Equation A14)}$$

$$A_4 = \left(\frac{M^2}{16}\right)\left(11\cdot\theta-13\cdot\sin\theta\cdot\cos\theta-8\cdot\theta\cdot\cos^2\theta+10\cdot\sin\theta\cdot\cos^3\theta\right) \qquad \text{(Equation A15)}$$

$$A_5 = \left(\frac{M\cdot N}{2}\right)\left(3\cdot\sin\theta+2\cdot\theta\cdot\cos\theta-5\cdot\sin\theta\cdot\cos^2\theta\right) \qquad \text{(Equation A16)}$$

$$\delta = \theta-A_1+A_2+A_3+A_4+XA_5\text{(radians)} \qquad \text{(Equation A17)}$$

$$\sin\beta_2 = \sin\beta_1\cdot\cos\delta+g\cdot\sin\delta \qquad \text{(Equation A18)}$$

$$\cos\beta_2 = \left[h^2+\left(g\cdot\cos\delta-\sin\beta_1\cdot\sin\delta\right)^2\right]^{\frac{1}{2}} \qquad \text{(Equation A19)}$$

$$\phi_2 = \left\{\tan^{-1}\left[\frac{\left(a\cdot\sin\beta_2\right)}{\left(b\cdot\cos\beta_2\right)}\right]\right\}\cdot\left(\frac{180}{\pi}\right)\text{(geodetic latitude of target point, DDD)} \qquad \text{(Equation A20)}$$

$$\Lambda = \tan^{-1}\left[\frac{\left(\sin\delta\cdot\sin\alpha_{12}\right)}{\left(\cos\beta_1\cdot\cos\delta-\sin\beta_1\cdot\sin\delta\cdot\cos\alpha_{12}\right)}\right] \qquad \text{(Equation A21)}$$

$$\lambda_2 = \left(\lambda_1+\Lambda+L\right)\left(\frac{180}{\pi}\right)\text{(longitude of target point, DDD)} \qquad \text{(Equation A22)}$$

(ii) To create latitude and longitude pairs on an ellipsoidal Earth model, an applicant shall use the following equations to calculate the distance (S) of the geodesic between two points (P_1 and P_2), the forward azimuth (α_{12}) of the geodesic at P_1, and the back azimuth (α_{21}) of the geodesic at P_2, given the geodetic latitude (+N), longitude (+E) of P_1 and P_2. Azimuth is measured positively clockwise from North.

(A) Input. An applicant shall use the following input. Units must be in radians.

$$\phi_1 = \text{Geodetic latitude of launch point (radians)}$$
$$= \phi_1(\text{DDD}) \cdot \frac{\pi}{180}(\text{radians per degree})$$
$$\lambda_1 = \text{Longitude of launch point (DDD)}$$
$$= \lambda_1(\text{DDD}) \cdot \frac{\pi}{180}(\text{radians per degree})$$
$$S = \text{Range from launch point (nm)}$$
$$= S(\text{DDD}) \cdot \frac{\pi}{180}(\text{radians per degree})$$
$$\alpha_{12} = \text{Azimuth bearing from launch point (deg)}$$
$$= \alpha_{12}(\text{DDD}) \cdot \frac{\pi}{180}(\text{radians per degree})$$

(B) Computations. An applicant shall use the following equations to determine the distance (S), the forward azimuth (α_{12}) of the geodesic at P_1, and the back azimuth (α_{12}) of the geodesic at P_2.

$$f = 1 - \frac{b}{a} \qquad \text{(Equation A23)}$$

where:

a = WGS–84 semi-major axis (3443.91846652 nmi)

b = WGS–84 semi-minor axis (3432.37165994 nmi)

$$L = \lambda_2 - \lambda_1 \qquad \text{(Equation A24)}$$

$$\beta_1 = \tan^{-1}\left[\frac{(b \cdot \sin\phi_1)}{\alpha \cdot \cos\phi_1}\right] \qquad \text{(Equation A25)}$$

$$\beta_2 = \tan^{-1}\left[\frac{(b \cdot \sin\phi_2)}{\alpha \cdot \cos\phi_2}\right] \qquad \text{(Equation A26)}$$

$$A = \sin\beta_1 \cdot \sin\beta_2 \qquad \text{(Equation A27)}$$

$$B = \cos\beta_1 \cdot \cos\beta_2 \qquad \text{(Equation A28)}$$

$$\cos\delta = A + B \cdot \cos L \qquad \text{(Equation A29)}$$

$$n = \frac{(a-b)}{(a+b)} \qquad \text{(Equation A30)}$$

$$(\beta_2 - \beta_1) = (\phi_2 - \phi_1) + 2 \cdot \left\lfloor A \cdot (n + n^2 + n^3) - B \cdot (n - n^2 + n^3) \right\rfloor \cdot \sin(\phi_2 - \phi_1) \text{ radians} \qquad \text{(Equation A31)}$$

$$\sin\delta = \left\{\left(\sin L \cdot \cos\beta_2\right)^2 + \left[\sin\left(\beta_2 - \beta_1\right) + 2 \cdot \cos\beta_2 \cdot \sin\beta_1 \cdot \sin^2\left(L/2\right)\right]^2\right\}^{\frac{1}{2}} \qquad \text{(Equation A32)}$$

$$\delta = \tan^{-1}\left(\frac{\sin\delta}{\cos\delta}\right) \text{evaluated in positive radians} \leq \pi \qquad \text{(Equation A33)}$$

$$c = \frac{B \cdot \sin L}{\sin\delta} \qquad \text{(Equation A34)}$$

$$m = 1 - c^2 \qquad \text{(Equation A35)}$$

$$S = b \cdot \left\{\begin{array}{l} \delta \cdot \left[1 + f + f^2\right] + A \cdot \left[\left(f + f^2\right) \cdot \sin\delta - \left(f^2 \cdot \delta^2\right)/\left(2 \cdot \sin\delta\right)\right] \\ -(m/2)\left[\left(f + f^2\right)\left(\delta + \sin\delta \cdot \cos\delta\right) - \left(f^2 \cdot \delta^2\right)/\left(\tan\delta\right)\right] \\ -\left(A^2 \cdot f^2/2\right) \cdot \sin\delta \cdot \cos\delta \\ +\left(f^2 \cdot m^2/16\right)\left[\delta + \sin\delta \cdot \cos\delta - 2 \cdot \sin\delta \cdot \cos^3\delta - 8\delta^2/\left(\tan\delta\right)\right] \\ +\left(A^2 \cdot m \cdot f^2/2\right)\left[\sin\delta \cdot \cos^2 + \delta + \delta^2/\left(\sin\delta\right)\right] \text{ in the same units as "a" and "b"} \end{array}\right\} \qquad \text{(Equation A36)}$$

$$\Lambda = L + c \cdot \left\{\begin{array}{l} \delta \cdot \left(f + f^2\right) - \left(A \cdot f^2/2\right)\left[\sin\delta + 2\delta^2/\left(\sin\delta\right)\right] \\ +\left(m \cdot f^2/4\right)\left[\sin\delta\cos\delta - 5\delta + 4\delta^2/\left(\tan\delta\right)\right] \end{array}\right\} \text{radians} \qquad \text{(Equation A37)}$$

$$\alpha_{12} = \tan^{-1}\left\{\frac{\left(\cos\beta_2 \cdot \sin\Lambda\right)}{\left[\sin\left(\beta_2 - \beta_1\right) + 2 \cdot \cos\beta_2 \cdot \sin\beta_1 \cdot \sin^2\left(\Lambda/2\right)\right]}\right\} \cdot \left(\frac{180}{\pi}\right) \text{degrees} \qquad \text{(Equation A38)}$$

$$\alpha_{21} = \tan^{-1}\left\{\frac{\left(-\cos\beta_1 \cdot \sin\Lambda\right)}{\left[2 \cdot \cos\beta_1 \cdot \sin\beta_2 \cdot \sin^2\left(\Lambda/2\right) - \sin\left(\beta_2 - \beta_1\right)\right]}\right\} \cdot \left(\frac{180}{\pi}\right) \text{degrees} \qquad \text{(Equation A39)}$$

(c) Creation of a Flight Corridor

(1) To define a flight corridor, an applicant shall:

(i) Select a guided suborbital or orbital launch vehicle, and, for an orbital launch vehicle, select from table 1 of § 420.19 a launch vehicle weight class that best represents the launch vehicle the applicant plans to support at its launch point;

(ii) Select a debris dispersion radius (D_{max}) from table A–1 corresponding to the guided suborbital launch vehicle or orbital launch vehicle class selected in paragraph (c)(1)(i);

(iii) Select a launch point geodetic latitude and longitude; and

(iv) Select a flight azimuth.

(2) An applicant shall define and map an overflight exclusion zone using the following method:

(i) Select a debris dispersion radius (D_{max}) from table A–1 and a downrange distance (D_{OEZ}) from table A–2 to define an overflight exclusion zone for the guided suborbital launch vehicle or orbital launch vehicle class selected in paragraph (c)(1)(i).

(ii) An overflight exclusion zone is described by the intersection of the following boundaries, which are depicted in figure A–1:

(A) An applicant shall define an uprange boundary with a half-circle arc of radius D_{max} and a chord of length twice D_{max} connecting the half-circle arc endpoints. The uprange boundary placement on a map has the chord midpoint positioned on the launch point with the chord oriented along an azimuth ±90°from the launch azimuth and the half-circle arc located uprange from the launch point.

(B) An applicant shall define the downrange boundary with a half-circle arc of radius D_{max} and a chord of length twice D_{max} connecting the half-circle arc endpoints. The downrange boundary placement on a map has the chord midpoint intersecting the nominal flight azimuth line at a distance D_{OEZ} inches downrange with the chord oriented along an azimuth ±90°from the launch azimuth and the half-circle arc located downrange from the intersection of the chord and the flight azimuth line.

(C) Crossrange boundaries of an overflight exclusion zone are defined by two lines segments. Each is parallel to the flight azimuth with one to the left side and one to the right side of the flight azimuth line. Each line connects an uprange half-circle arc endpoint to a downrange half-circle arc endpoint as shown in figure A–1.

(iii) An applicant shall identify the overflight exclusion zone on a map that meets the requirements of paragraph (b).

(3) An applicant shall define and map a flight corridor using the following method:

(i) In accordance with paragraph (b), an applicant shall draw a flight corridor on one or more maps with the D_{max} origin centered on the intended launch point and the flight corridor centerline (in the downrange direction) aligned with the initial flight azimuth. The flight corridor is depicted in figure A–2 and its line segment lengths are tabulated in table A–3.

(ii) An applicant shall define the flight corridor using the following boundary definitions:

(A) An applicant shall draw an uprange boundary, which is defined by an arc-line GB (figure A–2), directly uprange from and centered on the intended launch point with radius D_{max}.

(B) An applicant shall draw line CF perpendicular to and centered on the flight azimuth line, and positioned 10 nm downrange from the launch point. The applicant shall use the length of line CF provided in table A–3 corresponding to the guided suborbital launch vehicle or orbital launch vehicle class selected in paragraph (c)(1)(i).

(C) An applicant shall draw line DE perpendicular to and centered on the flight azimuth line, and positioned 100 nm downrange from the launch point. The applicant shall use the length of line DE provided in table A–3 corresponding to the guided suborbital launch vehicle or orbital launch vehicle class selected in paragraph (c)(1)(i).

(D) Except for a guided suborbital launch vehicle, an applicant shall draw a downrange boundary, which is defined by line HI and is drawn perpendicular to and centered on the flight azimuth line, and positioned 5,000 nm downrange from the launch point. The applicant shall use the length of line HI provided in table A–3 corresponding to the orbital launch vehicle class selected in paragraph (c)(1)(i).

(E) An applicant shall draw crossrange boundaries, which are defined by three lines on the left side and three lines on the right side of the flight azimuth. An applicant shall construct the left flight corridor boundary according to the following, and as depicted in figure A–3 :

(1) The first line (line BC in figure A–3) is tangent to the uprange boundary arc, and ends at endpoint C of line CF, as depicted in figure A–3;

(2) The second line (line CD in figure A–3) begins at endpoint C of line BC and ends at endpoint D of line DH, as depicted in figure A–3;

(3) For all orbital launch vehicles, the third line (line DH in figure A–3) begins at endpoint D of line CD and ends at endpoint H of line HI, as depicted in figure A–3; and

(4) For a guided suborbital launch vehicle, the line DH begins at endpoint D of line CD and ends at a point tangent to the impact dispersion area drawn in accordance with paragraph (c)(4) and as depicted in figure A–4.

(F) An applicant shall repeat the procedure in paragraph (c)(3)(ii)(E) for the right side boundary.

(iii) An applicant shall identify the flight corridor on a map that meets the requirements of paragraph (b).

(4) For a guided suborbital launch vehicle, an applicant shall define a final stage impact dispersion area as part of the flight corridor and show the impact dispersion area on a map, as depicted in figure A–4, in accordance with the following:

(i) An applicant shall select an apogee altitude (H_{ap}) for the launch vehicle final stage. The apogee altitude should equal the highest altitude intended to be reached by a guided suborbital launch vehicle launched from the launch point.

(ii) An applicant shall define the impact dispersion area by using an impact range factor [$IP(H_{ap})$] and a dispersion factor [$DISP(H_{ap})$] as shown below:

(A) An applicant shall calculate the impact range (D) for the final launch vehicle stage. An applicant shall set D equal to the maximum apogee altitude (H_{ap}) multiplied by the impact range factor as shown below:

$$D = H_{ap} \cdot IP\left(H_{ap}\right) \qquad \text{(Equation A40)}$$

where: $IP(H_{ap}) = 0.4$ for an apogee less than 100 km; and $IP(H_{ap}) = 0.7$ for an apogee 100 km or greater.

(B) An applicant shall calculate the impact dispersion radius (R) for the final launch vehicle stage. An applicant shall set R equal to the maximum apogee altitude (H_{ap}) multiplied by the dispersion factor as shown below:

$$R = H_{ap} \cdot DISP\left(H_{ap}\right) \qquad \text{(Equation A41)}$$

where: $DISP(H_{ap}) = 0.05$

(iii) An applicant shall draw the impact dispersion area on a map with its center on the predicted impact point. An applicant shall then draw line DH in accordance with paragraph (c)(3)(ii)(E)(4).

(d) Evaluate the Flight Corridor

(1) An applicant shall evaluate the flight corridor for the presence of any populated areas. If an applicant determines that no populated area is located within the flight corridor, then no additional steps are necessary.

(2) If a populated area is located in an overflight exclusion zone, an applicant may modify its proposal or demonstrate that there are times when no people are present or that the applicant has an agreement in place to evacuate the public from the overflight exclusion zone during a launch.

(3) If a populated area is located within the flight corridor, an applicant may modify its proposal and create another flight corridor pursuant to appendix A, use appendix B to narrow the flight corridor, or complete a risk analysis in accordance with appendix C.

TABLE A–1.—DEBRIS DISPERSION RADIUS (D_{max}) (IN)

Orbital launch vehicles				Suborbital launch vehicles
Small	Medium	Medium large	Large	Guided
87,600 (1.20 nm)	111,600 (1.53 nm)	127,200 (1.74 nm)	156,000 (2.14 nm)	96,000 (1.32 nm)

TABLE A–2.—OVERFLIGHT EXCLUSION ZONE DOWNRANGE DISTANCE (D_{oez}) (IN)

Orbital launch vehicles				Suborbital launch vehicles
Small	Medium	Medium large	Large	Guided
240,500 (3.30 nm)	253,000 (3.47 nm)	310,300 (4.26 nm)	937,700 (12.86 nm)	232,100 (3.18 nm)

Table A-3: Flight Corridor Line Segment Lengths

D_{max} (in)		Line Segment Lengths (x 10^6 inches)		
Orbital Launch Vehicles		$\overline{CF}$	$\overline{DE}$	$\overline{HI}$
Small	87600 (1.20 nm)	2.87620 (39.45 nm)	8.59452 (117.87 nm)	128.566 (1763.27 nm)
Medium	111,600 (1.53 nm)	2.97220 (40.76 nm)	8.64252 (118.53 nm)	128.566 (1763.27 nm)
Med-Large	127,200 (1.74 nm)	3.03460 (41.62 nm)	8.67372 (118.96 nm)	128.566 (1763.27 nm)
Large	156,000 (2.14 nm)	3.14979 (43.20 nm)	8.73131 (119.75 nm)	128.566 (1763.27 nm)
Suborbital Launch Vehicles		$\overline{CF}$	$\overline{DE}$	$\overline{HI}$
Guided	96,000 (1.32 nm)	2.90980 (39.91 nm)	8.61132 (118.10 nm)	N/A

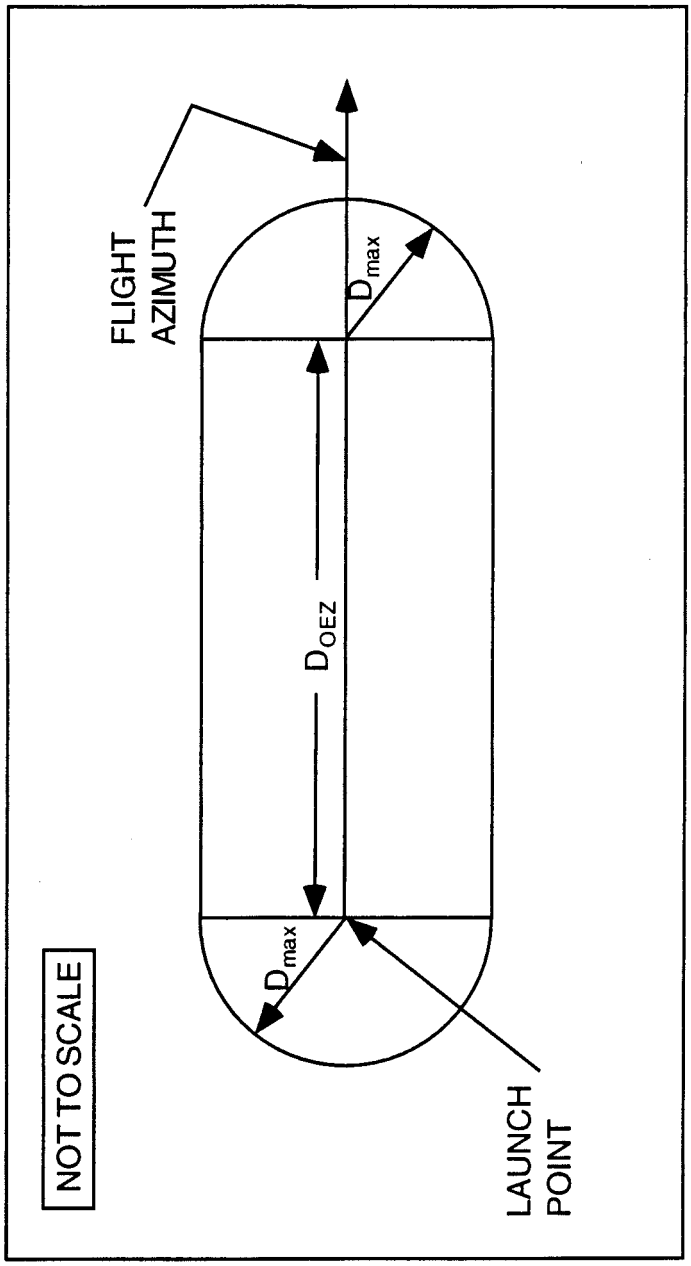

Figure A-1
Overflight Exclusion Zone

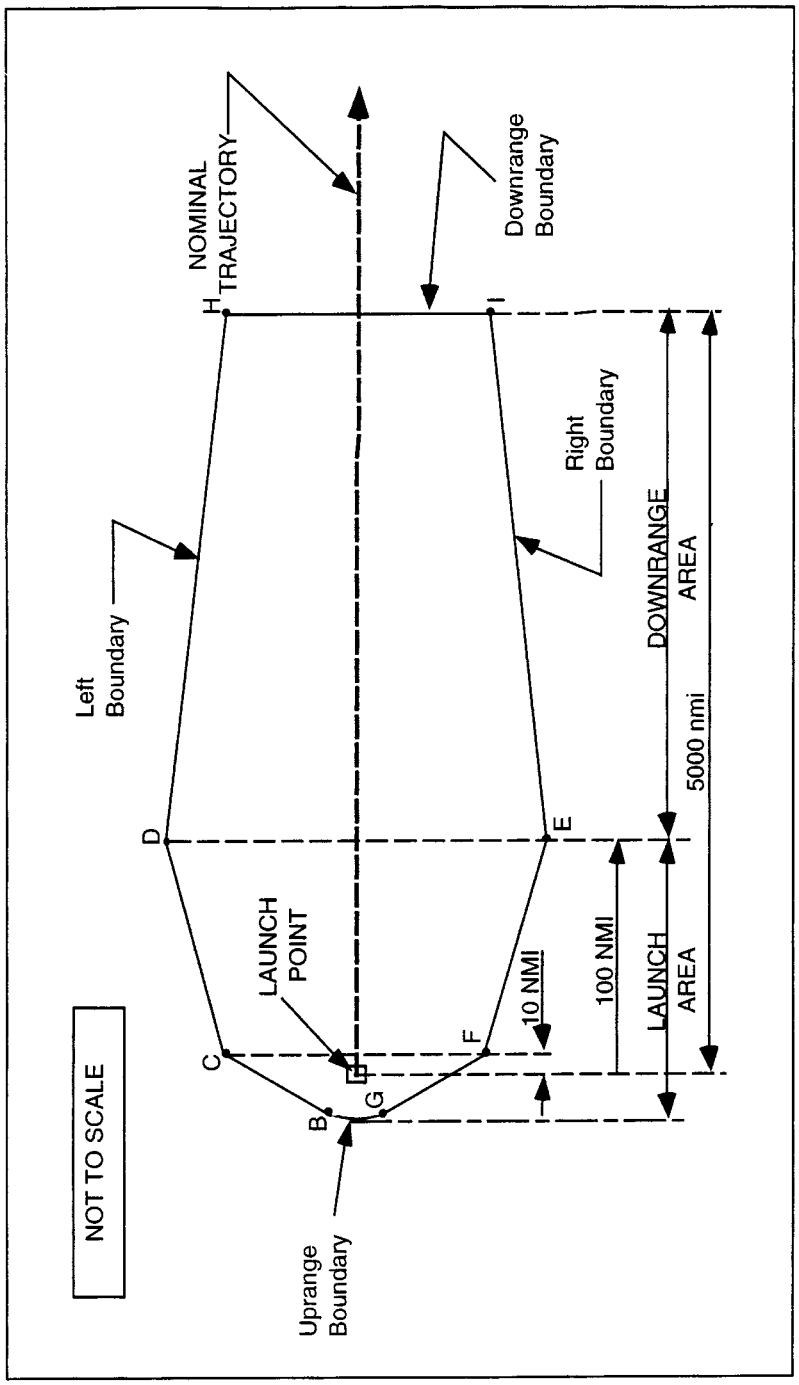

Figure A-2
Flight Corridor

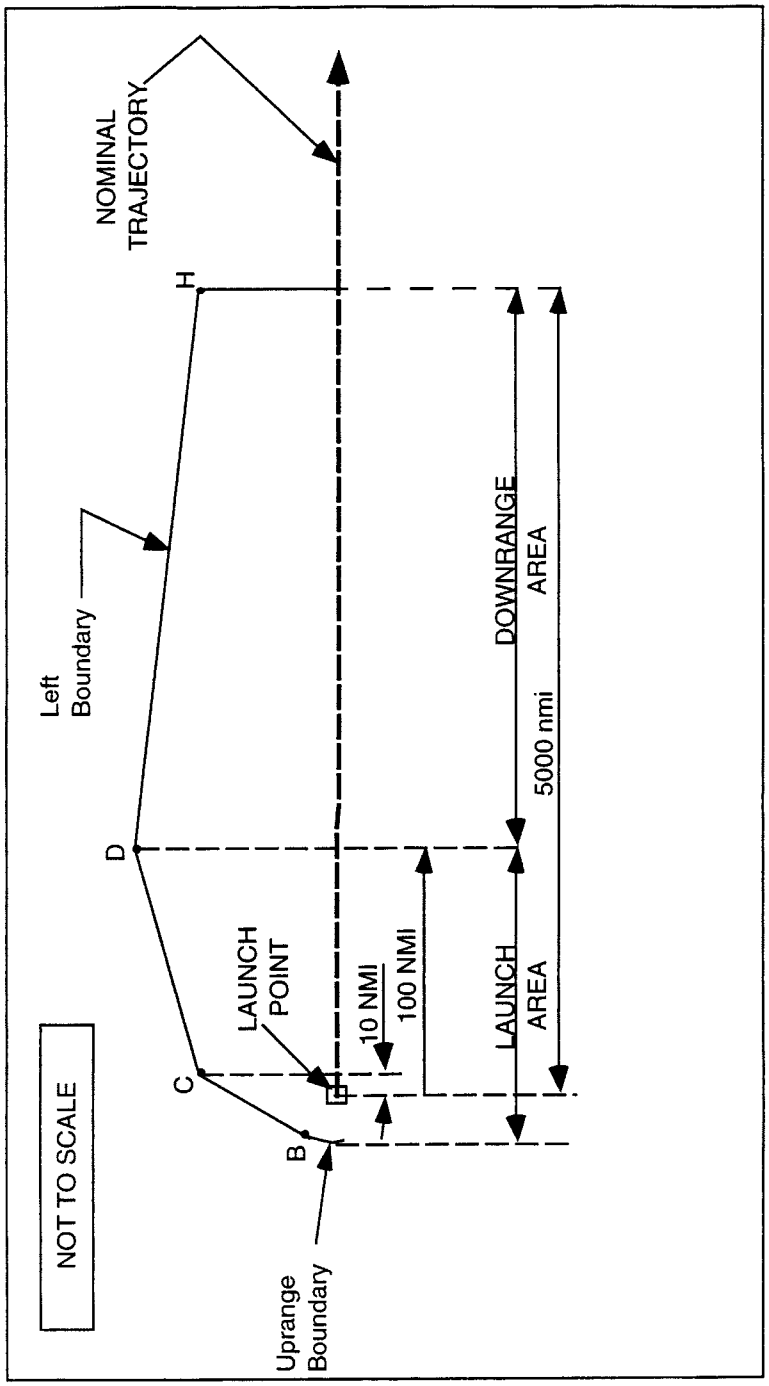

Figure A-3
Construction of Left Boundary of Flight Corridor

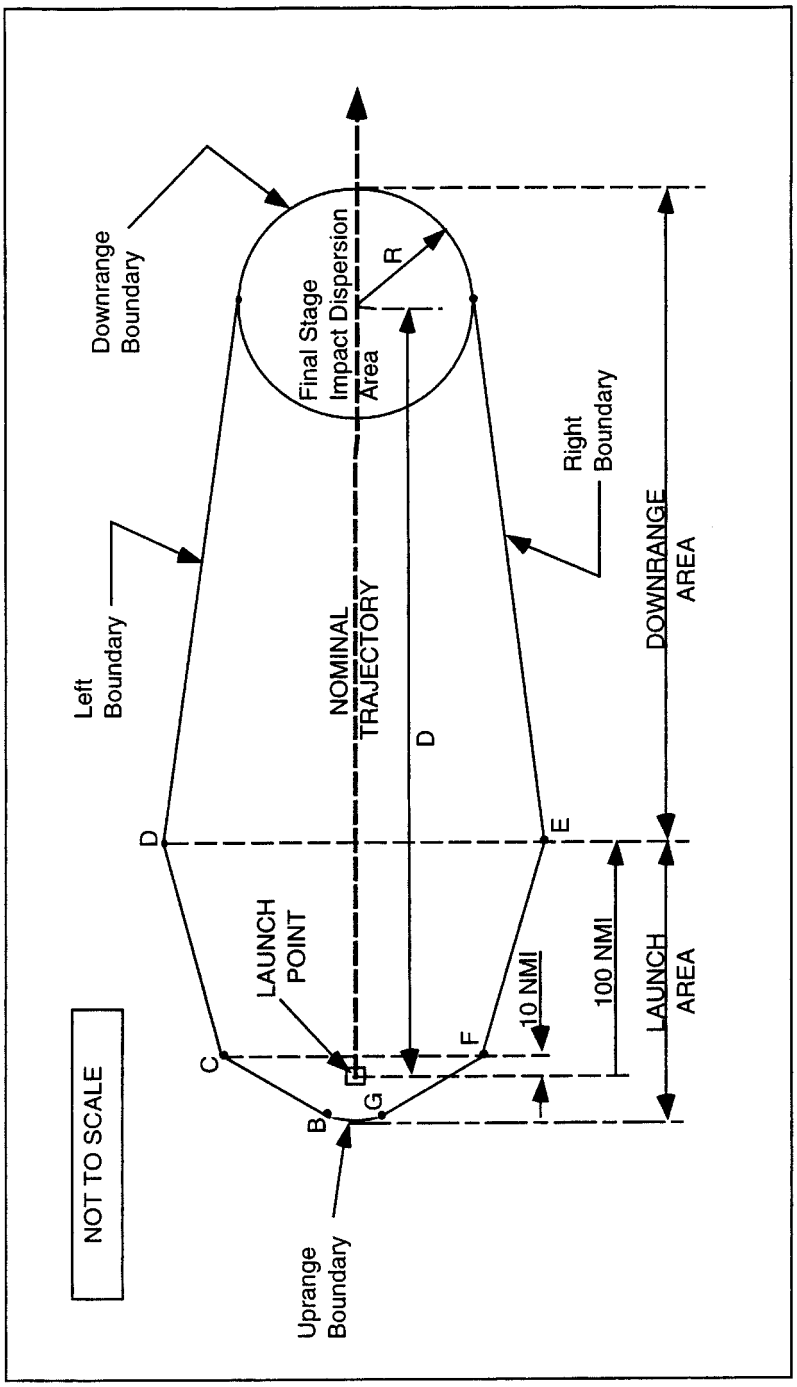

Figure A-4
Flight Corridor for Guided Sub-Orbital Launch Vehicles

Appendix B to Part 420—Method for Defining a Flight Corridor

(a) Introduction

(1) This appendix provides a method to construct a flight corridor from a launch point for a guided suborbital launch vehicle or any one of the four weight classes of guided orbital launch vehicles from table 1, § 420.19, using local meteorological data and a launch vehicle trajectory.

(2) A flight corridor is constructed in two sections—one section comprising a launch area and one section comprising a downrange area. The launch area of a flight corridor reflects the extent of launch vehicle debris impacts in the event of a launch vehicle failure and applying local meteorological conditions. The downrange area reflects the extent of launch vehicle debris impacts in the event of a launch vehicle failure and applying vehicle imparted velocity, malfunctions turns, and vehicle guidance and performance dispersions.

(3) A flight corridor includes an overflight exclusion zone in the launch area and, for a guided suborbital launch vehicle, an impact dispersion area in the downrange area. A flight corridor for a guided suborbital launch vehicle ends with an impact dispersion area and, for the four classes of guided orbital launch vehicles, 5,000 nautical miles (nm) from the launch point, or where the IIP leaves the surface of the Earth, whichever is shorter.

(b) Data Requirements

(1) Launch area data requirements. An applicant shall satisfy the following data requirements to perform the launch area analysis of this appendix. The data requirements are identified in table B–1 along with sources where data acceptable to the FAA may be obtained.

(i) An applicant must select meteorological data that meet the specifications in table B–1 for the proposed launch site.

TABLE B–1.—LAUNCH AREA DATA REQUIREMENTS

Data category	Data item	Data source
Meteorological Data	Local statistical wind data as a function of altitude up to 50,000 feet. Required data include: altitude (ft), atmospheric density (slugs/ft^3), mean East/West meridianal (u) and North/South zonal (v) wind (ft/sec), standard deviation of u and v wind (ft/sec), correlation coefficient, number of observations and wind percentile (%).	These data may be obtained from: Global Gridded Upper Air Statistics, Climate Applications Branch National Climatic Data Center.
Nominal Trajectory Data	State vector data as function of time after lift-off in topocentric launch point centered X,Y,Z,X,Y,Z coordinates with the X-axis aligned with the flight azimuth. Trajectory time intervals shall not be greater than one second. XYZ units are in feet and X,Y,Z units are in ft/sec.	Actual launch vehicle trajectory data; or trajectory generation software that meets the requirements of paragraph (b)(1)(ii).
Debris Data	A fixed ballistic coefficient equal to 3 lbs/ft^2 is used for the launch area.	N/A.
Geographical Data	Launch point geodetic latitude on a WGS–84 ellipsoidal Earth model.	Geographical surveys or Global Positioning System.
	Launch point longitude on an ellipsoidal Earth model.	
	Maps using scales of not less than 1:250,000 inches per inch within 100 nm of a launch point and 1:20,000,000 inches per inch for distances greater than 100 nm from a launch point.	Map types with scale and projection information are listed in the Defense Mapping Agency, Public Sale, Aeronautical Charts and Publications Catalog. The catalog and maps may be ordered through the U.S. Dept. of Commerce, National Oceanic and Atmospheric Administration, National Ocean Service.

(ii) For a guided orbital launch vehicle, an applicant shall obtain or create a launch vehicle nominal trajectory. An applicant may use trajectory data from a launch vehicle manufacturer or generate a trajectory using trajectory simulation software. Trajectory time intervals shall be no greater than one second. If an applicant uses a trajectory computed with commercially available software, the software must calculate the trajectory using the following parameters, or clearly and convincingly demonstrated equivalents:

(A) Launch location:

(*1*) Launch point, using geodetic latitude and longitude to four decimal places; and

(*2*) Launch point height above sea level.

(B) Ellipsoidal Earth:

(*1*) Mass of Earth;

(*2*) Radius of Earth;

(*3*) Earth flattening factor; and

(*4*) Gravitational harmonic constants (J2, J3, J4).

(C) Vehicle characteristics:

(*1*) Mass as a function of time;

(*2*) Thrust as a function of time;

(*3*) Specific impulse (I_{SP}) as a function of time; and

(*4*) Stage dimensions.

(D) Launch events:

(*1*) Stage burn times; and

(*2*) Stage drop-off times.

(E) Atmosphere:

(*1*) Density as a function of altitude;

(*2*) Pressure as a function of altitude;

(*3*) Speed of sound as a function of altitude; and

(*4*) Temperature as a function of altitude.

(F) Winds:

(1) Wind direction as a function of altitude; and

(2) Wind magnitude as a function of altitude.

(I) Aerodynamics: drag coefficient as a function of mach number for each stage of flight showing subsonic, transonic and supersonic mach regions for each stage.

(iii) An applicant shall use a ballistic coefficient (β) of 3 lbs/ft^2 for debris impact computations.

(iv) An applicant shall satisfy the map and plotting requirements for a launch area of appendix A, paragraph (b).

(2) Downrange area data requirements. An applicant shall satisfy the following data requirements to perform the downrange area analysis of this appendix.

(i) The launch vehicle weight class and method of generating a trajectory used in the launch area shall be used by an applicant in the downrange area as well. Trajectory time intervals must not be greater than one second.

(ii) An applicant shall satisfy the map and plotting data requirements for a downrange area of appendix A, paragraph (b).

(c) Construction of a Launch Area of a Flight Corridor

(1) An applicant shall construct a launch area of a flight corridor using the processes and equations of this paragraph for each trajectory position. An applicant shall repeat these processes at time points on the launch vehicle trajectory for time intervals of no greater than one second. When choosing wind data, an applicant shall use a time period of between one and 12 months.

(2) A launch area analysis must include all trajectory positions whose Z-values are less than or equal to 50,000 ft.

(3) Each trajectory time is denoted by the subscript ''i''. Height intervals for a given atmospheric pressure level are denoted by the subscript ''j'.

(4) Using data from the GGUAS CD–ROM, an applicant shall estimate the mean atmospheric density, maximum wind speed, height interval fall times and height interval debris dispersions for 15 mean geometric height intervals.

(i) The height intervals in the GGUAS source data vary as a function of the following 15 atmospheric pressure levels expressed in millibars: surface, 1000, 850, 700, 500, 400, 300, 250, 200, 150, 100, 70, 50, 30, 10. The actual geometric height associated with each pressure level varies depending on the time of year. An applicant shall estimate the mean geometric height over the period of months selected in subparagraph (1) of this paragraph for each of the 15 pressure levels as shown in equation B1.

$$\overline{H}_j = \frac{\sum_{m=1}^{k} h_m \cdot n_m}{\sum_{m=1}^{k} n_m} \qquad \text{(Equation B1)}$$

where:

H_j = mean geometric height h_m = geometric height for a given month n_m = number of observations for a given month

k = number of wind months of interest

(ii) The atmospheric densities in the source data also vary as a function of the 15 atmospheric pressure levels. The actual atmospheric density associated with each pressure level varies depending on the time of year. An applicant shall estimate the mean atmospheric density over the period of months selected in accordance with subparagraph (1) of this paragraph for each of the 15 pressure levels as shown in equation B2.

$$\bar{\rho}_j \frac{\sum_{m=1}^{k} \rho_m \cdot n_m}{\sum_{m=1}^{k} n_m} \qquad \text{(Equation B2)}$$

where:

ρ_j = mean atmospheric density

ρ_m = atmospheric density for a given month

n_m = number of observations for a given month

k = number of wind months of interest

(iii) An applicant shall estimate the algebraic maximum wind speed at a given pressure level as follows and shall repeat the process for each pressure level.

(A) For each month, an applicant shall calculate the monthly mean wind speed ($\overline{W}_{az}$) for 360 azimuths using equation B3;

(B) An applicant shall select the maximum monthly mean wind speed from the 360 azimuths;

(C) An applicant shall repeat subparagraphs (c)(4)(iii)(A) and (B) for each month of interest; and

(D) An applicant shall select the maximum mean wind speed from the range of months. The absolute value of this wind is designated W_{max} for the current pressure level.

(iv) An applicant shall calculate wind speed using the means for winds from the West (u) and winds from the North (v). An applicant shall use equation B3 to resolve the winds to a specific azimuth bearing.

$$\overline{W}_{az} = u \cdot \cos(90 - az) + v \cdot \sin(90 - az) \qquad \text{(Equation B3)}$$

where:

az = wind azimuth

u = West zonal wind component

v = North zonal wind component

$\overline{W}_{az}$ = mean wind speed at azimuth for each month

(v) An applicant shall estimate the interval fall time over a height interval assuming the initial descent velocity is equal to the terminal velocity (V_T). An applicant shall use equations B4 through B6 to estimate the fall time over a given height interval.

$$\Delta H_j = \overline{H}_{j+1} - \overline{H}_j \qquad \text{(Equation B4)}$$

$$V_{Tj} = \left[\frac{\frac{2 \cdot \beta}{\left(\bar{\rho}_{j+1} + \bar{\rho}_j\right)}}{2} \right]^{0.5} \qquad \text{(Equation B5)}$$

$$t_j = \frac{\Delta H_j}{V_{Tj}} \qquad \text{(Equation B6)}$$

where:

ΔH_{Tj}= height difference between two mean geometric heights

β= ballistic coefficient

ρx= mean atmospheric density for the corresponding mean geometric heights

V_{Tj} = terminal velocity

(vi) An applicant shall estimate the interval debris dispersion (D_j) by multiplying the interval fall time by the algebraic maximum mean wind speed (W_{max}) as shown in equation B7.

$$D_j = t_j \cdot W_{max} \qquad \text{(Equation B7)}$$

(5) Once the Dj are estimated for each height interval, an applicant shall determine the total debris dispersion (D_i) for each Z_i using a linear interpolation and summation exercise, as shown below in equation B8. An applicant shall use a launch point height of zero equal to the surface level of the nearest GGUAS grid location.

$$D_i = D_j \cdot \left(\frac{Z_i - \overline{H}_i}{H_{j+1} - \overline{H}_i} \right) + \sum_{n=1}^{j-1} D_n \qquad \text{(Equation B8)}$$

where:

n = number of height intervals below jth height interval

(6) Once all the D_i radii have been calculated, an applicant shall produce a launch area flight corridor in accordance with the requirements of subparagraphs (c)(6)(i)–(iv).

(i) On a map meeting the requirements of appendix A, paragraph (b), an applicant shall plot the X_i position location on the flight azimuth for the corresponding Z_i position;

(ii) An applicant shall draw a circle of radius D_i centered on the corresponding X_i position; and

(iii) An applicant shall repeat the instructions in subparagraphs (c)(6)(i)–(ii) for each D_i radius.

(iv) The launch area of a flight corridor is the enveloping line that encloses the outer boundary of the D_i circles as shown in Fig. B–1. The uprange portion of a flight corridor is described by a semi-circle arc that is a portion of either the most uprange D_i dispersion circle, or the overflight exclusion zone (defined by subparagraph (c)(7)), whichever is further uprange.

(7) An applicant shall define an overflight exclusion zone in the launch area in accordance with the requirements of appendix A, subparagraph (c)(2).

(8) An applicant shall draw the launch area flight corridor and overflight exclusion zone on a map or maps that meet the requirements of table B–1.

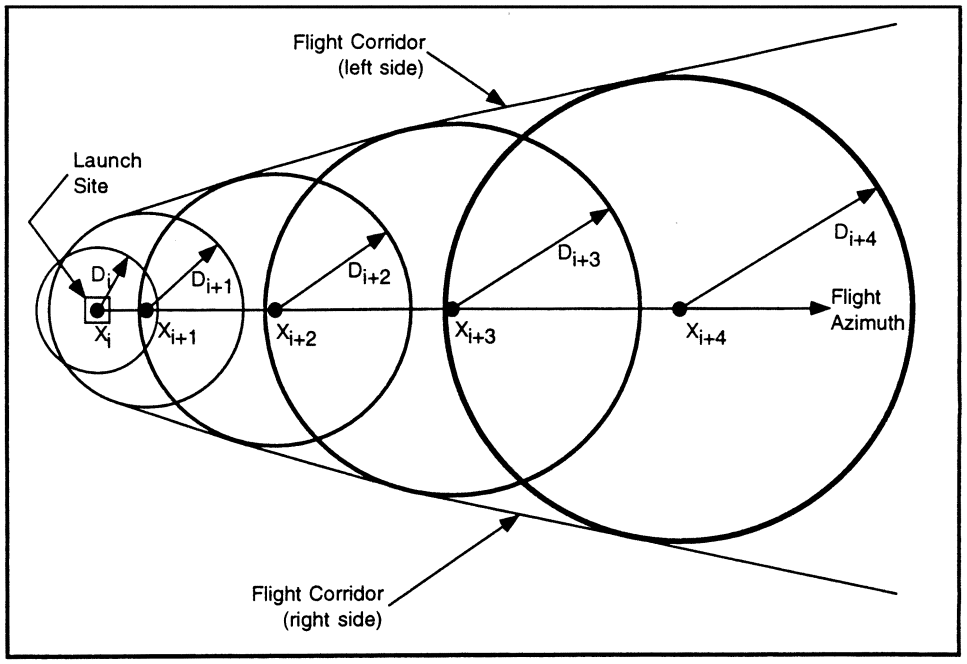

Figure B - 1: Launch Area of a Flight Corridor

(d) Construction of a Downrange Area of a Flight Corridor

(1) The downrange area analysis estimates the debris dispersion for the downrange time points on a launch vehicle trajectory. An applicant shall perform the downrange area analysis using the processes and equations of this paragraph.

(2) The downrange area analysis shall include trajectory positions at a height (the Z_i-values) greater than 50,000 feet and nominal trajectory IIP values less than or equal to 5,000 nm. For a guided suborbital launch vehicle, the final IIP value for which an applicant must account is the launch vehicle final stage impact point. Each trajectory time shall be one second or less and is denoted by the subscript ''i'.

(3) An applicant shall compute the downrange area of a flight corridor boundary in four steps, from each trajectory time increment: determine a reduction ratio factor; calculate the launch vehicle position after simulating a malfunction turn; rotate the state vector after the malfunction turn in the range of three degrees to one degree as a function of X_i distance downrange; and compute the IIP of the resulting trajectory. The locus of IIPs describes the boundary of the downrange area of a flight corridor. An applicant shall use the following subparagraphs, (d)(3)(i)–(v), to compute the downrange area of the flight corridor boundary:

(i) Compute the downrange Distance to the final IIP position for a nominal trajectory as follows:

(A) Using equations B30 through B69, determine the IIP coordinates (ϕ_{max}, λ_{max}) for the nominal state vector before the launch vehicle enters orbit where α in equation B30 is the nominal flight azimuth angle measured from True North.

(B) Using the range and bearing equations of appendix A, paragraph (b)(3), determine the distance (S_{max}) from the launch point coordinates (ϕ_{lp}, λ_{lp}) to the IIP coordinates (ϕ_{max}, λ_{max}) computed in accordance with (3)(i)(A) of this paragraph.

(C) The distance for S_{max} may not exceed 5000 nm. In cases when the actual value exceeds 5000 nm the applicant shall use 5000 nm for S_{max}.

(ii) Compute the reduction ratio factor (F_n) for each trajectory time increment as follows:

(A) Using equations B30 through B69, determine the IIP coordinates (ϕ_i, λ_i) for the nominal state vector where α in equation B30 is the nominal flight azimuth angle measured from True North.

(B) Using the range and bearing equations of appendix A, paragraph (b)(3), determine the distance (S_i) from the launch point coordinates (ϕ_{lp}, λ_{lp}) to the IIP coordinates (ϕ_i, λ_i) computed in (3)(ii)(A) of this paragraph.

(C) The reduction ratio factor is:

$$F_{ri} = \left(1 - \frac{S_i}{S_{max}}\right) \qquad \text{(Equation B9)}$$

(iii) An applicant shall compute the launch vehicle position and velocity components after a simulated malfunction turn for each X_i using the following method.

(A) Turn duration (Δt) = 4 sec.

(B) Turn angle (θ)

$$\theta = (F_{ri}) * 45 \text{ degrees.} \qquad \text{(Equation B10)}$$

The turn angle equations perform a turn in the launch vehicle's yaw plane, as depicted in figure B–2.

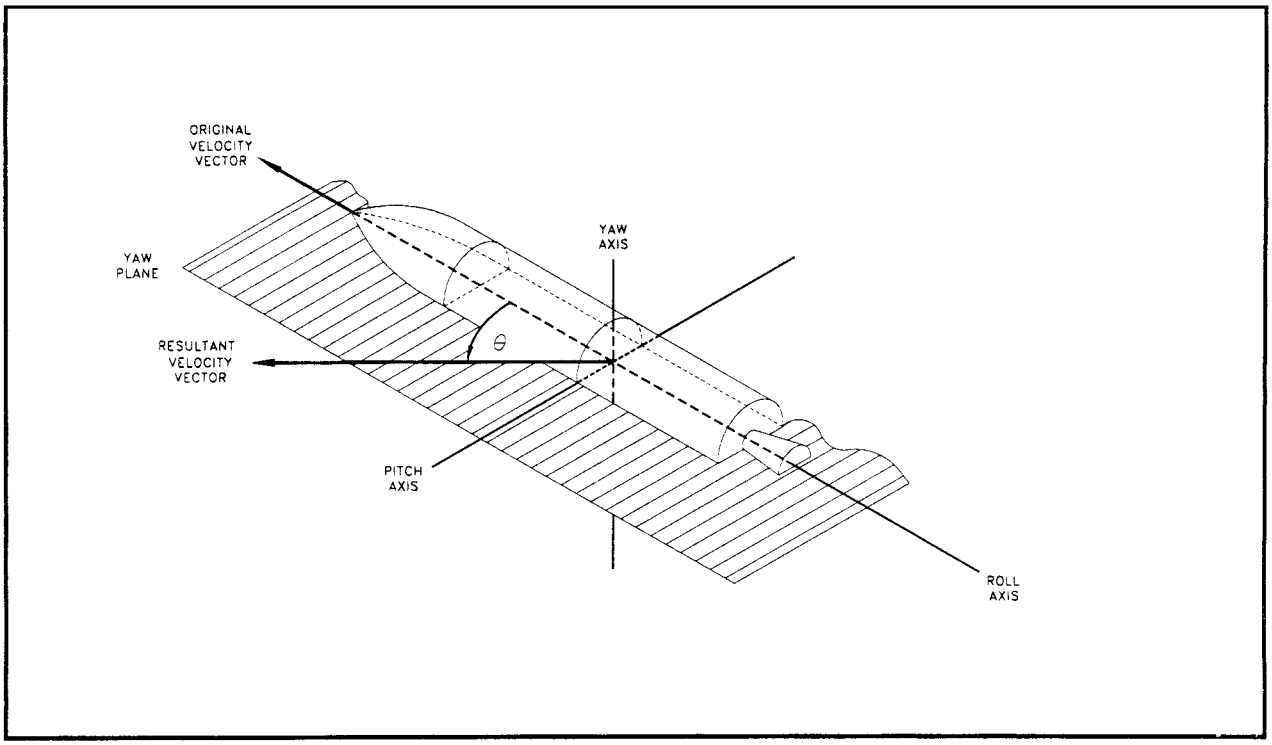

Figure B-2: Velocity Vector Turn Angle in Yaw Plane

(C) Launch vehicle velocity magnitude at the beginning of the turn (V_b) and velocity magnitude at the end of the turn (V_e)

$$V_b = \left(\dot{X}_1^2 + \dot{Y}_i^2 + \dot{Z}_i^2\right)^{0.5} \text{ ft/sec} \qquad \text{(Equation B11)}$$

$$V_e = \left(\dot{X}_{i+5}^2 + \dot{Y}_{i+5}^2 + \dot{X}_{i+5}^2\right)^{0.5} \text{ ft/sec} \qquad \text{(Equation B12)}$$

(D) Average velocity magnitude over the turn duration (V)

$$\overline{V}_i = \frac{(V_b + V_e)}{2} \text{ ft/sec} \qquad \text{(Equation B13)}$$

(E) Velocity vector path angle (γ_i) at turn epoch

$$\gamma_i = \tan^{-1}\left[\frac{\dot{Z}_i}{\left(\dot{X}_i^2 + \dot{Y}_i^2\right)^{0.5}}\right] \qquad \text{(Equation B14)}$$

(F) Launch vehicle position components at the end of turn duration

$$X_{90L} = X_i + \overline{V}_i \cdot \Delta t \cdot \cos\left(\frac{-\theta}{2}\right) \cdot \cos(\gamma_i)$$

$$X_{90R} = X_i + \overline{V}_i \cdot \Delta t \cdot \cos\left(\frac{\theta}{2}\right) \cdot \cos(\gamma_i)$$

$$Y_{90L} = Y_i + \overline{V}_i \cdot \Delta t \cdot \sin\left(\frac{-\theta}{2}\right)$$

$$Y_{90R} = Y_i + \overline{V}_i \cdot \Delta t \cdot \sin\left(\frac{\theta}{2}\right)$$

$$Z_{90L} = Z_i + \overline{V}_i \cdot \Delta t \cdot \cos\left(\frac{-\theta}{2}\right) \cdot \sin(\gamma_i) - \left(\frac{1}{2}\right) \cdot g_1 \cdot \Delta t^2 \qquad \text{(Equations B15 - B20)}$$

$$Z_{90R} = Z_i + \overline{V}_i \cdot \Delta t \cdot \cos\left(\frac{\theta}{2}\right) \cdot \sin(\gamma_i) - \left(\frac{1}{2}\right) \cdot g_1 \cdot \Delta t^2$$

where: $g_1 = 32.17405$ ft/sec^2

(G) Launch vehicle velocity components at the end of turn duration

$$\dot{X}_{90L} = (X_{90L} - X_i)/\Delta t$$

$$\dot{X}_{90R} = (X_{90R} - X_i)/\Delta t$$

$$\dot{Y}_{90L} = \left|(Y_{90L} - Y_i)/\Delta t\right|$$

$$\dot{Y}_{90R} = (-1) \cdot \left|(Y_{90R} - Y_i)/\Delta t\right| \qquad \text{(Equations B21 - B26)}$$

$$\dot{Z}_{90L} = (Z_{90L} - Z_i)/\Delta t$$

$$\dot{Z}_{90R} = (Z_{90R} - Z_i)/\Delta t$$

(iv) An applicant shall rotate the trajectory state vector at the end of the turn duration to the right and left to define the right-lateral flight corridor boundary and the left-lateral flight corridor boundary, respectively. An applicant shall perform the trajectory rotation in conjunction with a trajectory transformation from the X_{90}, Y_{90}, Z_{90}, $\dot{X}_{90}$, $\dot{Y}_{90}$, $\dot{Z}_{90}$ components to E, N, U, E, N, U. The trajectory subscripts ''R'' and ''L'' from equations B15 through B26 have been discarded to reduce the number of equations. An applicant shall transform from to E,N,U,E,N,U to E,F,G,E,F,G. An applicant shall use the equations of paragraph (d)(3)(iv)(A)–(F) to produce the EFG components necessary to estimate each instantaneous impact point.

(A) An applicant must calculate the flight angle (α)

$$\Delta\alpha_i = 3 - 2 \cdot f_1 \cdot (1 - F_{ri}) \qquad \text{(Equation B27)}$$

$$\alpha_{Li} = (\text{Flight Azimuth} - \Delta\alpha_i)$$

for left lateral boundary computations (Equation B28)

- OR

$$\alpha_{Ri} = (\text{Flight Azimuth} - \Delta\alpha_i)$$

for right lateral boundary computations (Equation B29)

where: $f_1 = \begin{Bmatrix} 0.0 : F_{ri} \geq 0.8 \\ 1.0 : F_{ri} < 0.8 \end{Bmatrix}$

(B) An applicant shall transform X_{90},Y_{90},Z_{90} to E,N,U

$$E = X_{90}\sin(\alpha) - Y_{90}\cos(\alpha)$$
$$N = X_{90}\cos(\alpha) + Y_{90}\sin(\alpha) \qquad \text{(Equations B30 - B32)}$$
$$U = Z_{90}$$

(C) An applicant shall transform to $\dot{X}_{90}$, $\dot{Y}_{90}$, $\dot{Z}_{90}$ to $\dot{E}$, $\dot{N}$, $\dot{U}$.

$$\dot{E} = \dot{X}_{90}\sin(\alpha) - \dot{Y}_{90}\cos(\alpha)$$
$$\dot{N} = \dot{X}_{90}\cos(\alpha) + \dot{Y}_{90}\sin(\alpha) \qquad \text{(Equations B33 - B35)}$$
$$\dot{U} = \dot{Z}_{90}$$

(D) An applicant shall transform the launch point coordinates ($\phi_0\lambda_0,h_0$) to E_0,F_0,G_0

$$R = a_E\left\{1 - e^2\left[\sin^2(\phi_0)\right]\right\}^{-0.5}$$

where: $a_E = 20925646.3255$ ft

$$e^2 = 0.00669437999013$$
$$E_0 = (R + h_0)\cos(\phi_0)\cos(\lambda_0) \qquad \text{(Equations B36 - B39)}$$
$$F_0 = (R + h_0)\cos(\phi_0)\sin(\lambda_0)$$
$$G_0 = \left[R(1 - e^2) + h_0\right]\sin(\phi_0)$$

(E) An applicant shall transform E,N,U to E_{90},F_{90},G_{90}

$$E_{90} = E\cos(270 - \lambda_0) + N\cos(90 - \phi_0)\sin(270 - \lambda_0) - U\sin(90 - \phi_0)\sin(270 - \lambda_0) \qquad \text{(Equations B40 - B42)}$$
$$F_{90} = E\sin(270 - \lambda_0) + N\cos(90 - \phi_0)\cos(270 - \lambda_0) - U\sin(90 - \phi_0)\cos(270 - \lambda_0)$$
$$G_{90} = N\sin(90 - \phi_0) + U\cos(90 - \phi_0) + G_0$$

(F) An applicant shall transform to $\dot{E}$,$\dot{N}$,$\dot{U}$ TO $\dot{E}$,$\dot{F}$,$\dot{G}$

$$\dot{E}_{90} = \dot{E}\cos(270 - \lambda_0) + \dot{N}\cos(90 - \phi_0)\sin(270 - \lambda_0) - \dot{U}\sin(90 - \phi_0)\sin(270 - \lambda_0) \qquad \text{(Equations B43 - B45)}$$
$$\dot{F}_{90} = \dot{E}\sin(270 - \lambda_0) + \dot{N}\cos(90 - \phi_0)\cos(270 - \lambda_0) - \dot{U}\sin(90 - \phi_0)\cos(270 - \lambda_0)$$
$$\dot{G}_{90} = \dot{N}\sin(90 - \phi_0) + \dot{U}\cos(90 - \phi_0)$$

(v) The IIP computation implements an iterative solution to the impact point problem. An applicant shall solve equations B46 through B69, with the appropriate substitutions, up to a maximum of five times. Each repetition of the equations provides a more accurate prediction of the IIP. An applicant shall use the required IIP computations of paragraphs (d)(3)(v)(A)–(W) below. An applicant shall use this IIP computation for both the left-and right-lateral offsets. The IIP computations will result in latitude and longitude pairs for the left-lateral flight corridor boundary and the right-lateral flight corridor boundary. An applicant shall use the lines connecting the latitude and longitude pairs to describe the entire downrange area boundary of the flight corridor up to 5000 nm or a final stage impact dispersion area.

(A) An applicant shall approximate the radial distance ($r_{k,l}$) from the geocenter to the IIP. The distance from the center of the Earth ellipsoid to the launch point shall be used for the initial approximation of $r_{k,l}$ as shown in equation B46.

$$r_{k,1} = \left(E_0^2 + F_0^2 + G_0^2\right)^{0.5} \qquad \text{(Equation B46)}$$

(B) An applicant shall compute the radial distance (r) from the geocenter to the launch vehicle position.

$$r = \left(E_{90}^2 + F_{90}^2 + G_{90}^2\right)^{0.5} \qquad \text{(Equation B47)}$$

If $r < r_{k,l}$ then the launch vehicle position is below the Earth's surface and an impact point cannot be computed. An applicant must restart the calculations with the next trajectory state vector.

(C) An applicant shall compute the inertial velocity components.

$$\dot{E}l_{90} = \dot{E}_{90} - \omega \cdot F_{90}$$
$$\dot{F}l_{90} = \dot{F}_{90} + \omega \cdot E_{90} \qquad \text{(Equations B48-B49)}$$

where: $\omega = 4.178074 \times 10^{-3}$ deg/sec

(D) An applicant shall compute the magnitude of the inertial velocity vector.

$$v_0\left(\dot{E}I_{90}^2 + \dot{F}I_{90}^2 + \dot{G}_{90}^2\right)^{0.5} \qquad \text{(Equation B50)}$$

(E) An applicant shall compute the eccentricity of the trajectory ellipse multiplied by the cosine of the eccentric anomaly at epoch ε_c).

$$\varepsilon_c = \left(\frac{r \cdot v_0^2}{K}\right) - 1 \qquad \text{(Equation B51)}$$

where: $K = 1.407644 \times 10^{16}$ ft^3/sec^2

(F) An applicant shall compute the semi-major axis of the trajectory ellipse (a^t).

$$a_t = \frac{r}{1 - \varepsilon_c} \qquad \text{(Equation B52)}$$

If a_t 0 or a_t then the trajectory orbit is not elliptical, but is hyperbolic or parabolic, and an impact point cannot be computed. The launch vehicle has achieved escape velocity and the applicant may terminate computations.

(G) An applicant shall compute the eccentricity of the trajectory ellipse multiplied by the sine of the eccentric anomaly at epoch ε_s).

$$\varepsilon_s = \frac{\left(E_{90}\dot{E}I_{90} + F_{90}\dot{F}I_{90} + G_{90}\dot{G}_{90}\right)}{\left(K \cdot a_t\right)^{0.5}} \qquad \text{(Equation B53)}$$

(H) An applicant shall compute the eccentricity of the trajectory ellipse squared ε^2).

$$\varepsilon^2 = \left(\varepsilon_c^2 + \varepsilon_s^2\right) \qquad \text{(Equation B54)}$$

If $a_t(1 - \varepsilon) - a_E] > 0$ and $\varepsilon \geq 0$ then the trajectory perigee height is positive and an impact point cannot be computed. The launch vehicle has achieved Earth orbit and the applicant may terminate computations.

(I) An applicant shall compute the eccentricity of the trajectory ellipse multiplied by the cosine of the eccentric anomaly at impact (ε_{c_k}).

$$\varepsilon_{c_k} = \frac{\left(a_t - r_{k,1}\right)}{a_t} \qquad \text{(Equation B55)}$$

(J) An applicant shall compute the eccentricity of the trajectory ellipse multiplied by the sine of the eccentric anomaly at impact (ε_{s_k}).

$$\varepsilon_{s_k} = -\left(\varepsilon^2 - \varepsilon^2{}_{c_k}\right)^{0.5} \qquad \text{(Equation B56)}$$

If $\varepsilon_{s_k} < 0$ then the trajectory orbit does not intersect the Earth's surface and an impact point cannot be computed. The launch vehicle has achieved Earth orbit and the applicant may terminate computations.

(K) An applicant shall compute the cosine of the difference between the eccentric anomaly at impact and the eccentric anomaly at epoch ($\Delta\varepsilon_{c_k}$).

$$\Delta\varepsilon_{c_k} = \frac{\left(\varepsilon_{c_k} \cdot \varepsilon_c\right) + \left(\varepsilon_{s_k} \cdot \varepsilon_s\right)}{\varepsilon^2} \qquad \text{(Equation B57)}$$

(L) An applicant shall compute the sine of the difference between the eccentric anomaly at impact and the eccentric anomaly at epoch ($\Delta\varepsilon_{s_k}$).

$$\Delta\varepsilon_{s_k} = \frac{\left(\varepsilon_{s_k} \cdot \varepsilon_c\right) - \left(\varepsilon_{c_k} \cdot \varepsilon_s\right)}{\varepsilon^2} \qquad \text{(Equation B58)}$$

(M) An applicant shall compute the f-series expansion of Kepler's equations.

$$f_2 = \frac{\left(\Delta\varepsilon_{c_k} - \varepsilon_c\right)}{\left(1 - \varepsilon_c\right)} \qquad \text{(Equation B59)}$$

(N) An applicant shall compute the g-series expansion of Kepler's equations.

$$g_2 = \left(\Delta\varepsilon_{s_k} + \varepsilon_s - \varepsilon_{s_k}\right)\left(\frac{a_t^3}{K}\right)^{0.5} \qquad \text{(Equation B60)}$$

(O) An applicant shall compute the E,F,G coordinates at impact (E_i,F_i,G_i).

$$E_k = f_2 \cdot E_{90} + g_2 \cdot \dot{E}l_{90}$$
$$F_k = f_2 \cdot F_{90} + g_2 \cdot \dot{F}l_{90} \qquad \text{(Equations B61-B63)}$$
$$G_k = f_2 \cdot G_{90} + g_2 \cdot \dot{G}_{90}$$

(P) An applicant shall approximate the distance from the geocenter to the launch vehicle position at impact ($r_{k,2}$).

$$r_{k,2} = \frac{a_E}{\left[\left(\frac{e^2}{1-e^2}\right)\left(\frac{G_k}{r_{k,1}}\right)^2 + 1\right]^{0.5}} \qquad \text{(Equation B64)}$$

where:

a_E = 20925646.3255 ft

e^2 = 0.00669437999013

(Q) An applicant shall let $r_{k+1,1} = r_{k,2}$, substitute $r_{k+1,1}$ for $r_{k,1}$ in equation B55 and repeat equations B55—B64 up to four more times increasing ''k'' by an increment of one on each loop (e.g. kε{1, 2, 3, 4, 5}). If $|r_{5,1} - r_{5,2}| > 1$ then the iterative solution does not converge and an impact point does not meet the accuracy tolerance of plus or minus one foot. An applicant must try more iterations, or restart the calculations with the next trajectory state vector.

(R) An applicant shall compute the difference between the eccentric anomaly at impact and the eccentric anomaly at epoch (Δε).

$$\Delta\varepsilon = \tan^{-1}\left(\frac{\Delta\varepsilon_{s_5}}{\Delta\varepsilon_{c_5}}\right) \qquad \text{(Equation B65)}$$

(S) An applicant shall compute the time of flight from epoch to impact (t).

$$t = \left(\Delta\varepsilon + \varepsilon_s - \varepsilon_{s_5}\right)\left(\frac{a_t^3}{K}\right)^{0.5} \qquad \text{(Equation B66)}$$

(T) An applicant shall compute the geocentric latitude at impact (ϕ').

$$\phi_i' = \sin^{-1}\left(\frac{G_5}{r5,2}\right) \qquad \text{(Equation B67)}$$

Where: $+90° > \phi_i' > -90°$

(U) An applicant shall compute the geodetic latitude at impact (ϕ).

$$\phi_i = \tan^{-1}\left[\frac{\tan\left(\phi_i'\right)}{\left(1-e^2\right)}\right] \qquad \text{(Equation B68)}$$

Where: $+90° > \phi_i > -90°$

(V) An applicant shall compute the East longitude at impact (λ).

$$\lambda_i = \tan^{-1}\left(\frac{F_5}{E_5}\right) - \omega t \qquad \text{(Equation B69)}$$

(W) If the range from the launch point to the impact point is equal to or greater than 5000 nm, an applicant shall terminate IIP computations.

(4) For a guided suborbital launch vehicle, an applicant shall define a final stage impact dispersion area as part of the flight corridor and show the area on a map using the following procedure:

(i) For equation B70 below, an applicant shall use an apogee altitude (H_{ap}) corresponding to the highest altitude reached by the launch vehicle final stage in the applicant's launch vehicle trajectory analysis done in accordance with paragraph (b)(1)(ii).

(ii) An applicant shall define the final stage impact dispersion area by using a dispersion factor [DISP(H_{ap})] as shown below. An applicant shall calculate the impact dispersion radius (R) for the final launch vehicle stage. An applicant shall set R equal to the maximum apogee altitude (H_{ap}) multiplied by the dispersion factor as shown below:

$$R = H_{ap} \cdot \mathrm{DISP}\left(H_{ap}\right) \qquad \text{(Equation B70)}$$

where: DISP(H_{ap}) = 0.05

(5) An applicant shall combine the launch area and downrange area flight corridor and any final stage impact dispersion area for a guided suborbital launch vehicle.

(i) On the same map with the launch area flight corridor, an applicant shall plot the latitude and longitude positions of the left and right sides of the downrange area of the flight corridor calculated in accordance with subparagraph (d)(3).

(ii) An applicant shall connect the latitude and longitude positions of the left side of the downrange area of the flight corridor sequentially starting with the last IIP calculated on the left side and ending with the first IIP calculated on the left side. An applicant shall repeat this procedure for the right side.

(iii) An applicant shall connect the left sides of the launch area and downrange portions of the flight corridor. An applicant shall repeat this procedure for the right side.

(iv) An applicant shall plot the overflight exclusion zone defined in subparagraph (c)(7).

(v) An applicant shall draw any impact dispersion area on the downrange map with the center of the impact dispersion area on the launch vehicle final stage impact point obtained from the applicant's launch vehicle trajectory analysis done in accordance with subparagraph (b)(1)(ii).

(e) Evaluate the Launch Site

(1) An applicant shall evaluate the flight corridor for the presence of populated areas. If no populated area is located within the flight corridor, then no additional steps are necessary.

(2) If a populated area is located in an overflight exclusion zone, an applicant may modify its proposal or demonstrate that there are times when no people are present or that the applicant has an agreement in place to evacuate the public from the overflight exclusion zone during a launch.

(3) If a populated area is located within the flight corridor, an applicant may modify its proposal or complete an overflight risk analysis in accordance with appendix C.

Appendix C to Part 420—Risk Analysis

(a) Introduction

(1) This appendix provides a method for an applicant to estimate the expected casualty (E_c) for a launch of a guided expendable launch vehicle using a flight corridor generated either by appendix A or appendix B. This appendix also provides an applicant options to simplify the method where population at risk is minimal.

(2) An applicant shall perform a risk analysis when a populated area is located within a flight corridor defined by either appendix A or appendix B. If the estimated expected casualty exceeds 30×10^{-6}, an applicant may either modify its proposal, or if the flight corridor used was generated by the appendix A method, use the appendix B method to narrow the flight corridor and then redo the overflight risk analysis pursuant to this appendix. If the estimated expected casualty still exceeds 30×10^{-6}, the FAA will not approve the location of the proposed launch point.

(b) Data Requirements

(1) An applicant shall obtain the data specified by subparagraphs (b)(2) and (3) and summarized in table C–1. Table C–1 provides sources where an applicant may obtain data acceptable to the FAA. An applicant must also employ the flight corridor information

from appendix A or B, including flight azimuth and, for an appendix B flight corridor, trajectory information.

(2) Population data. Total population (N) and the total landmass area within a populated area (A) are required. Population data up to and including 100 nm from the launch point are required at the U.S. census block group level. Population data downrange from 100 nm are required at no greater than 1° × 1° latitude/longitude grid coordinates.

(3) Launch vehicle data. Launch vehicle data consist of the launch vehicle failure probability (P_f), the launch vehicle effective casualty area (A_c), trajectory position data, and the overflight dwell time (t_d). The failure probability is a constant ($P_f = 0.10$) for a guided orbital or suborbital expendable launch vehicle. Table C–3 provides effective casualty area data based on IIP range. Trajectory position information is provided from distance computations provided by this appendix for an appendix A flight corridor, or trajectory data used in appendix B for an appendix B flight corridor. The dwell time (t_d) may be determined from trajectory data produced when creating an appendix B flight corridor.

TABLE C–1.—OVERFLIGHT ANALYSIS DATA REQUIREMENTS

Data category	Data item	Data source
Population Data	Total population within a populated area (N)	Within 100 nm of the launch point: U.S. census data at the census block-group level. Downrange from 100 nm beyond the launch point, world population data are available from:
	Total landmass area within the populated area (A).	Carbon Dioxide Information Analysis Center (CDIAC) Oak Ridge National Laboratory Database—Global Population Distribution (1990), Terrestrial Area and Country Name Information on a One by One Degree Grid Cell Basis (DB1016 (8–1996)
Launch Vehicle Data	Failure probability—$P_f = 0.10$	N/A.
	Effective casualty area (A_c)	See table C–3.
	Overflight dwell time	Determined by range from the launch point or trajectory used by applicant.
	Nominal trajectory data (for an appendix B flight corridor only).	See appendix B, table B–1.

(c) Estimating Corridor Casualty Expectation

(1) A corridor casualty expectation [E_C(Corridor)] estimate is the sum of the expected casualty measurement of each populated area inside a flight corridor.

(2) An applicant shall identify and locate each populated area in the proposed flight corridor.

(3) An applicant shall determine the probability of impact in each populated area using the procedures in subparagraphs (5) or (6) of this paragraph. Figures C–1 and C–2 illustrate an area considered for probability of impact (P_i) computations by the dashed-lined box around the populated area within a flight corridor, and figure C–3 illustrates a populated area in a final stage impact dispersion area. An applicant shall then estimate the E_C for each populated area in accordance with subparagraphs (7) and (8) of this paragraph.

(4) The P_i computations do not directly account for populated areas whose areas are bisected by an appendix A flight corridor centerline or an appendix B nominal trajectory ground trace. Accordingly, an applicant must evaluate P_i for each of the bisections as two separate populated areas, as shown in figure C–4, which shows one bisection to the left of an appendix A flight corridor's centerline and one to its right.

(5) Probability of impact (P_i) computations for a populated area in an appendix A flight corridor. An applicant shall compute P_i for each populated area using the following method:

(i) For the launch and downrange areas, but not for a final stage impact dispersion area for a guided suborbital launch vehicle, an applicant shall compute P_i for each populated area using the following equation:

$$P_i = \frac{\left(\frac{|y_2 - y_1|}{\sigma_y}\right)}{6\sqrt{2\pi}} \cdot \left(\exp\left(\frac{-\left(y_1/\sigma_y\right)^2}{2} \right) + 4 \cdot \exp\left[\frac{-\left(\frac{y_1 + y_2}{2\sigma_y}\right)^2}{2} \right] + \exp\left(\frac{-\left(y_2/\sigma_y\right)^2}{2} \right) \right) \cdot \left[\frac{P_f}{C} \cdot \frac{(x_2 - x_1)}{\dot{R}} \right] \qquad \text{(Equation C1)}$$

where:

x_1, x_2 = closest and farthest downrange distance (nm) along the flight corridor centerline to the populated area (see figure C–1)

y_1, y_2 = closest and farthest cross range distance (nm) to the populated area measured from the flight corridor centerline (see figure C–1)

σ_y = one-third of the cross range distance from the centerline to the flight corridor boundary (see figure C–1)

exp = exponential function (e^x)

P_f = probability of failure = 0.10

R = IIP range rate (nm/sec) (see table C–2)

C = 643 seconds (constant)

TABLE C–2.—IIP RANGE RATE VS. IIP RANGE

IIP range (nm)	IIP range rate (nm/s)
0–75	0.75
76–300	1.73
301–900	4.25
901–1700	8.85
1701–2600	19.75

TABLE C–2.—IIP RANGE RATE VS. IIP RANGE—Continued

IIP range (nm)	IIP range rate (nm/s)
2601–3500	42.45
3501–4500	84.85
4501–5250	154.95

(ii) For each populated area within a final stage impact dispersion area, an applicant shall compute P_i using the following method:

(A) An applicant shall estimate the probability of final stage impact in the x and y sectors of each populated area within the final stage impact dispersion area using equations C2 and C3:

$$P_x = \frac{\left(\frac{|x_2 - x_1|}{\sigma_x}\right)}{6\sqrt{2\pi}} \cdot \left(\exp\left(\frac{-\left(x_1/\sigma_x\right)^2}{2} \right) + 4 \cdot \exp\left[\frac{-\left(\frac{x_1 + x_2}{2\sigma_x}\right)^2}{2} \right] + \exp\left(\frac{-\left(x_2/\sigma_x\right)^2}{2} \right) \right) \qquad \text{(Equation C2)}$$

where:

X_1, X_2 = closest and farthest downrange distance, measured along the flight corridor centerline, measured from the nominal impact point to the populated area (see figure C–3)

σ_x = one-third of the impact dispersion radius (see figure C–3)

exp = exponential function (e^x)

$$P_y = \frac{\left(\frac{|y_2 - y_1|}{\sigma_y}\right)}{6\sqrt{2\pi}} \cdot \left(\exp\left(\frac{-\left(y_1/\sigma_y\right)^2}{2} \right) + 4 \cdot \exp\left[\frac{-\left(\frac{y_1 + y_2}{2\sigma_y}\right)^2}{2} \right] + \exp\left(\frac{-\left(y_2/\sigma_y\right)^2}{2} \right) \right) \qquad \text{(Equation C3)}$$

where:

y_1, y_2 = closest and farthest cross range distance to the populated area measured from the flight corridor centerline (see figure C–3)

σ_y = one-third of the impact dispersion radius (see figure C–3)

exp = exponential function (e^x)

(B) If a populated area intersects the impact dispersion area boundary so that the x_2 or y_2 distance would otherwise extend outside the impact dispersion area, the x_2 or y_2 distance should be set equal to the impact dispersion area radius. The x_2 distance for populated area A in figure C–3 is an example. If a populated area intersects the flight azimuth, an applicant shall solve equation C3 by obtaining the solution in two parts. An applicant shall determine, first, the probability between $y_1 = 0$ and $y_2 = a$ and, second, the probability between $y_1 = 0$ and $y_2 = b$, as depicted in figure C–4. The probability P_y is then equal to the sum of the probabilities of the two parts. If a populated area intersects the line that is normal to the flight azimuth on the impact point, an applicant shall solve equation C2 by obtaining the solution in two parts in the same manner as with the values of x.

(C) An applicant shall calculate the probability of impact for each populated area using equation C4 below:

$$P_l = P_s \cdot P_x \cdot P_y \qquad \text{(Equation C4)}$$

where: $P_s = 1 - P_f = 0.90$

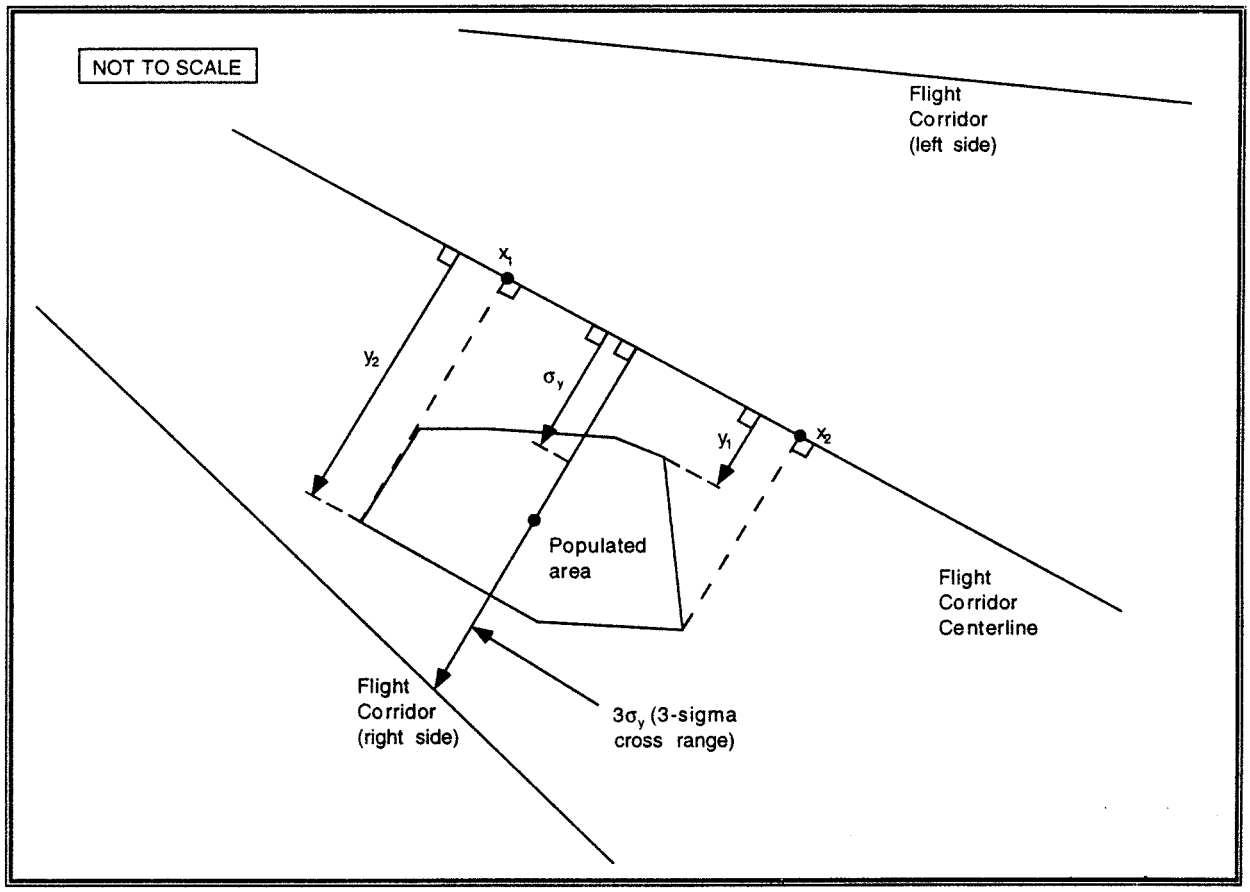

Figure C-1: Analysis of an Appendix A Flight Corridor

(6) Probability of impact computations for a populated area in an appendix B flight corridor. An applicant shall compute P_i using the following method:

(i) For the launch and downrange areas, but not for a final stage impact dispersion area for a guided suborbital launch vehicle, an applicant shall compute P_i for each populated area using the following equation:

$$P_i = \frac{\left(\frac{|y_2 - y_1|}{\sigma_y}\right)}{6\sqrt{2\pi}} \cdot \left(\exp\left(\frac{-\left(y_1/\sigma_y\right)^2}{2}\right) + 4 \cdot \exp\left[\frac{-\left(\frac{y_1 + y_2}{2\sigma_y}\right)^2}{2}\right] + \exp\left(\frac{-\left(y_2/\sigma_y\right)^2}{2}\right)\right) \cdot \left(\frac{P_f}{t} \cdot t_d\right) \qquad \text{(Equation C5)}$$

where:

y_1, y_2 = closest and farthest cross range distance (nm) to a populated area measured from the nominal trajectory IIP ground trace (see figure C–2)
σ_y = one-third of the cross range distance (nm) from nominal trajectory to the flight corridor boundary (see figure C–2)
exp = exponential function (e^x)
P_f = probability of failure = 0.10
t = flight time from lift-off to orbital insertion (seconds)
t_d = overflight dwell time (seconds)

(ii) For each populated area within a final stage impact dispersion area, an applicant shall compute P_i using the following method:

(A) An applicant shall estimate the probability of final stage impact in the x and y sectors of each populated area within the final stage impact dispersion area using equations C6 and C7:

$$P_x = \frac{\left(\frac{|x_2 - x_1|}{\sigma_x}\right)}{6\sqrt{2\pi}} \cdot \left(\exp\left(\frac{-\left(x_1/\sigma_x\right)^2}{2}\right) + 4 \cdot \exp\left[\frac{-\left(\frac{x_1 + x_2}{2\sigma_x}\right)^2}{2}\right] + \exp\left(\frac{-\left(x_2/\sigma_x\right)^2}{2}\right)\right) \qquad \text{(Equation C6)}$$

where:

x_1, x_2 = closest and farthest downrange distance, measured along nominal trajectory IIP ground trace, measured from the nominal impact point to the populated area (see figure C–3)

σ_x = one-third of the impact dispersion radius (see figure C–3)

exp = exponential function (e^x)

$$P_y = \frac{\left(\frac{|y_2 - y_1|}{\sigma_y}\right)}{6\sqrt{2\pi}} \cdot \left(\exp\left(\frac{-\left(y_1/\sigma_y\right)^2}{2} \right) + 4 \cdot \exp\left[\frac{-\left(\frac{y_1 + y_2}{2\sigma_y}\right)^2}{2} \right] + \exp\left(\frac{-\left(y_2/\sigma_y\right)^2}{2} \right) \right) \qquad \text{(Equation C7)}$$

where:

y_1, y_2 = closest and farthest cross range distance to the populated area measured from the nominal trajectory IIP ground trace (see figure C–3)

σ_y = one-third of the impact dispersion radius (see figure C–3)

exp = exponential function (e^x)

(B) If a populated area intersects the impact dispersion area boundary so that the x_2 or y_2 distance would otherwise extend outside the impact dispersion area, the x_2 or y_2 distance should be set equal to the impact dispersion area radius. The x_2 distance for populated area A in figure C–3 is an example. If a populated area intersects the flight azimuth, an applicant shall solve equation C7 by obtaining the solution in two parts. An applicant shall determine, first, the probability between $y_1 = 0$ and $y_2 = a$ and, second, the probability between $y_1 = 0$ and $y_2 = b$, as depicted in figure C–4. The probability P_y is then equal to the sum of the probabilities of the two parts. If a populated area intersects the line that is normal to the flight azimuth on the impact point, an applicant shall solve equation C6 by obtaining the solution in two parts in a similar manner with the values of x.

(C) An applicant shall calculate the probability of impact for each populated area using equation C8 below:

$$P_1 = P_s \cdot P_x \cdot P_y \qquad \text{(Equation C8)}$$

where: $P_s = 1 - P_f = 0.90$

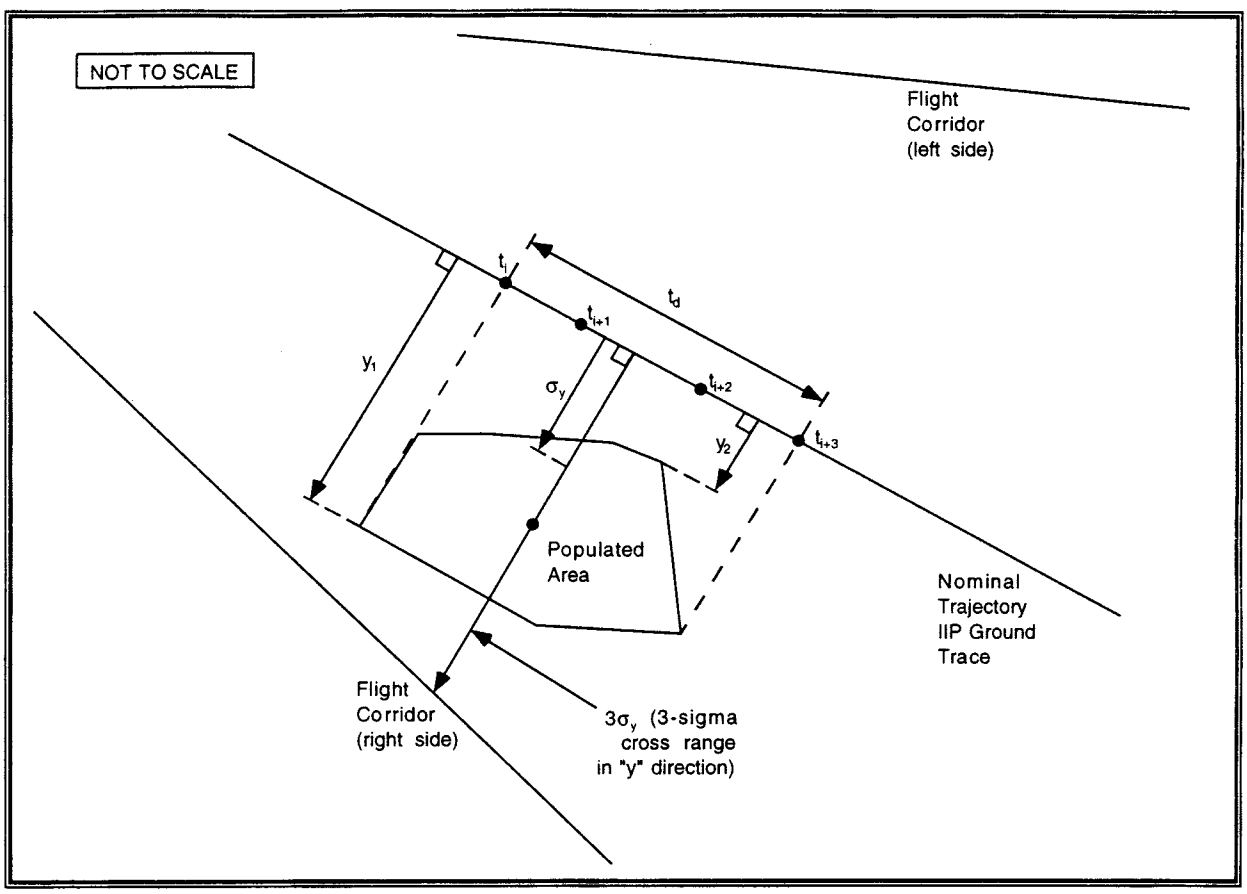

Figure C-2: Analysis of an Appendix B Flight Corridor

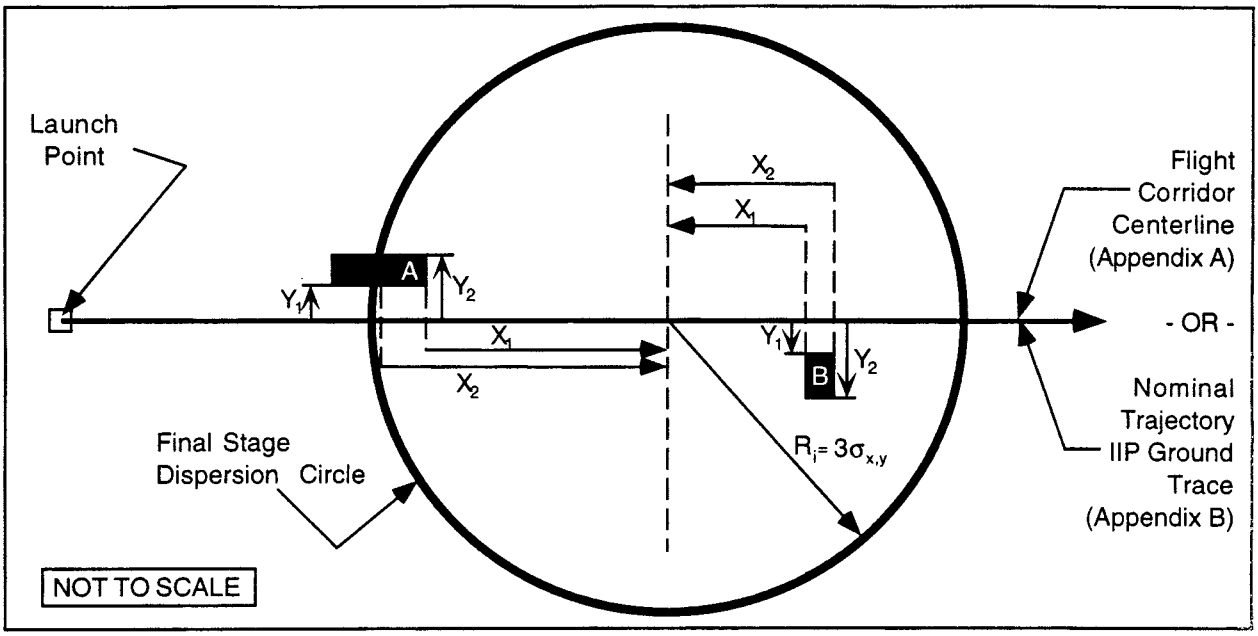

Figure C-3: Appendix A and B Final Stage Impact Risk Analysis

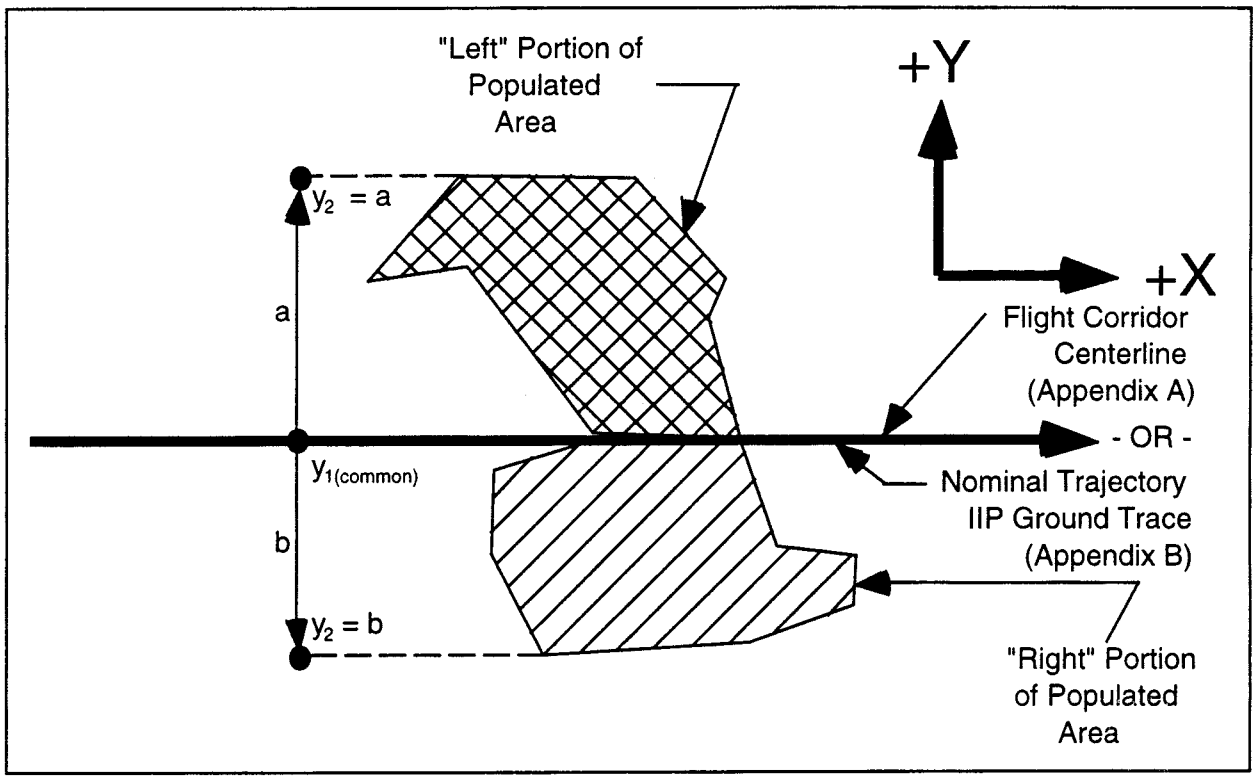

Figure C-4: Flight Azimuth Intersecting a Populated Area

(7) Using the P_i calculated in either subparagraph (c)(5) or (6) of this paragraph, an applicant shall calculate the casualty expectancy for each populated area within the flight corridor in accordance with equation C9. E_{ck} is the casualty expectancy for a given populated area as shown in equation C9, where individual populated areas are designated with the subscript ''k''.

$$E_{ck} = P_i \cdot \left(\frac{A_c}{A_k}\right) \cdot N_k \qquad \text{(Equation C9)}$$

where:

A_c = casualty area (from table C–3)
A_k = populated area
N_k = population in A_k

TABLE C–3.—EFFECTIVE CASUALTY AREA (MILES ^{2}) AS A FUNCTION OF IIP RANGE (NM)

IIP Range (nmi)	Orbital launch vehicles				Suborbital launch vehicles
	Small	Medium	Medium large	Large	Guided
0–49	0.43	0.53	0.71	1.94	0.43
50–1749	0.13	0.0022	0.11	0.62	0.13
1750–5000	3.59×10^{-6}	8.3×10^{-4}	1.08×10^{-1}	7.17×10^{-1}	3.59×10^{-6}

(8) An applicant shall estimate the total corridor risk using the following summation of risk:

$$Ec(\text{Corridor}) = \left(\sum_{k=1}^{n} E_{c_k}\right) \qquad \text{(Equation C10)}$$

(9) Alternative casualty expectancy (E_C) analyses. An applicant may employ specified variations to the analysis defined by subparagraphs (c)(1)–(8). Those variations are identified in subparagraphs (9)(i) through (vi) of this paragraph. Subparagraphs (i) through (iv) permit an applicant to make conservative assumptions that would lead to an overestimation of the corridor E_C compared with the analysis defined by subparagraphs (c)(1)–(8). In subparagraphs (v) and (vi), an applicant that would otherwise fail the analysis prescribed by subparagraphs (c)(1)–(8) may avoid (c)(1)–(8)'s overestimation of the probability of impact in each populated area. An applicant employing a variation shall identify the variation used, show and discuss the specific assumptions made to modify the analysis defined by subparagraphs (c)(1)–(8), and demonstrate how each assumption leads to overestimation of the corridor E_C compared with the analysis defined by subparagraphs (c)(1)–(c)(8).

(i) Assume that P_x and P_y have a value of 1.0 for all populated areas.

(ii) Combine populated areas into one or more larger populated areas, and use a population density for the combined area or areas equal to the most densely populated area.

(iii) For any given populated area, assume P_y has a value of one.

(iv) For any given P_x sector (an area spanning the width of a flight corridor and bounded by two time points on the trajectory IIP ground trace) assume P_y has a value of one and use a population density for the sector equal to the most densely populated area.

(v) For a given populated area, divide the populated area into smaller rectangles, determine P_i for each individual rectangle, and sum the individual impact probabilities to determine P_i for the entire populated area.

(vi) For a given populated area, use the ratio of the populated area to the area of the P_i rectangle from the subparagraph (c)(1)–(8) analysis.

(d) Evaluation of Results

(1) If the estimated expected casualty does not exceed $30\text{x}10^{-6}$, the FAA will approve the launch site location.

(2) If the estimated expected casualty exceeds 30×10^{-6}, then an applicant may either modify its proposal, or, if the flight corridor used was generated by the appendix A method, use the appendix B method to narrow the flight corridor and then perform another appendix C risk analysis.

Appendix D to Part 420—Impact Dispersion Areas and Casualty Expectancy Estimate for an Unguided Suborbital Launch Vehicle

(a) Introduction

(1) This appendix provides a method for determining the acceptability of the location of a launch point from which an unguided suborbital launch vehicle would be launched. The appendix describes how to define an overflight exclusion zone and impact dispersion areas, and how to evaluate whether the public risk presented by the launch of an unguided suborbital launch vehicle remains at acceptable levels.

(2) An applicant shall base its analysis on an unguided suborbital launch vehicle whose final launch vehicle stage apogee represents the intended use of the launch point.

(3) An applicant shall use the apogee of each stage of an existing unguided suborbital launch vehicle with a final launch vehicle stage apogee equal to the one proposed, and calculate each impact range and dispersion area using the equations provided.

(4) This appendix also provides a method for performing an impact risk analysis that estimates the expected casualty (E_c) within each impact dispersion area. This appendix provides an applicant options to simplify the method where population at risk is minimal.

(5) If the estimated E_c is less than or equal to 30×10^{-6}, the FAA will approve the launch point for unguided suborbital launch vehicles. If the estimated E_c exceeds 30×10^{-6}, the proposed launch point will fail the launch site location review.

(b) Data Requirements

(1) An applicant shall employ the apogee of each stage of an existing unguided suborbital launch vehicle whose final stage apogee represents the maximum altitude to be reached by unguided suborbital launch vehicles launched from the launch point. The apogee shall be obtained from one or more actual flights of an unguided suborbital launch vehicle launched at an 84 degree elevation.

(2) An applicant shall satisfy the map and plotting data requirements of appendix A, paragraph (b).

(3) Population data. An applicant shall use total population (N) and the total landmass area within a populated area (A) for all populated areas within an impact dispersion area. Population data up to and including 100 nm from the launch point are required at the U.S. census block group level. Population data downrange from 100 nm are required at no greater than 1° x 1° latitude/longitude grid coordinates.

(c) Overflight Exclusion Zone and Impact Dispersion Areas

(1) An applicant shall choose a flight azimuth from a launch point.

(2) An applicant shall define an overflight exclusion zone as a circle with a radius of 1600 feet centered on the launch point.

(3) An applicant shall define an impact dispersion area for each stage of the suborbital launch vehicle chosen in accordance with subparagraph (b)(1) in accordance with the following:

(i) An applicant shall calculate the impact range for the final launch vehicle stage (D_n). An applicant shall set D_n equal to the last stage apogee altitude (H_n) multiplied by an impact range factor [$IP(H_n)$] in accordance with the following:

$$D_n = H_n \cdot IP(H_n) \qquad \text{(Equation D1)}$$

where:

$IP(H_n)$ = 0.4 for an apogee less than 100 km, and
$IP(H_n)$ = 0.7 for an apogee of 100 km or greater.

(ii) An applicant shall calculate the impact range for each intermediate stage (D_i), where i ε {1, 2, 3, . . . (n − 1)}, and where n is the total number of launch vehicle stages. Using the apogee altitude (H_i) of each intermediate stage, an applicant shall use equation D1 to compute the impact range of each stage by substituting H_i for H_n. An applicant shall use the impact range factors provided by equation D1.

(iii) An applicant shall calculate the impact dispersion radius for the final launch vehicle stage (R_n). An applicant shall set R_n equal to the last stage apogee altitude (H_n) multiplied by an impact dispersion factor [DISP(H_n)] in accordance with the following:

$$R_n = H_n \cdot \mathrm{DISP}(H_n) \qquad \text{(Equation D2)}$$

where:

DISP(H_n) = 0.4 for an apogee less than 100 km, and

DISP(Hn) = 0.7 for an apogee of 100 km or greater.

(iv) An applicant shall calculate the impact dispersion radius for each intermediate stage (R_i), where i ε {1, 2, 3, . . . (n − 1)} and where n is the total number of launch vehicle stages. Using the apogee altitude (H_i) of each intermediate stage, an applicant shall use equation D2 to compute an impact dispersion radius of each stage by substituting H_i for H_n. An applicant shall use the dispersion factors provided by equation D2.

(4) An applicant shall display an overflight exclusion zone, each intermediate and final stage impact point (D_i through D_n), and each impact dispersion area for the intermediate and final launch vehicle stages on maps in accordance with paragraph (b)(2).

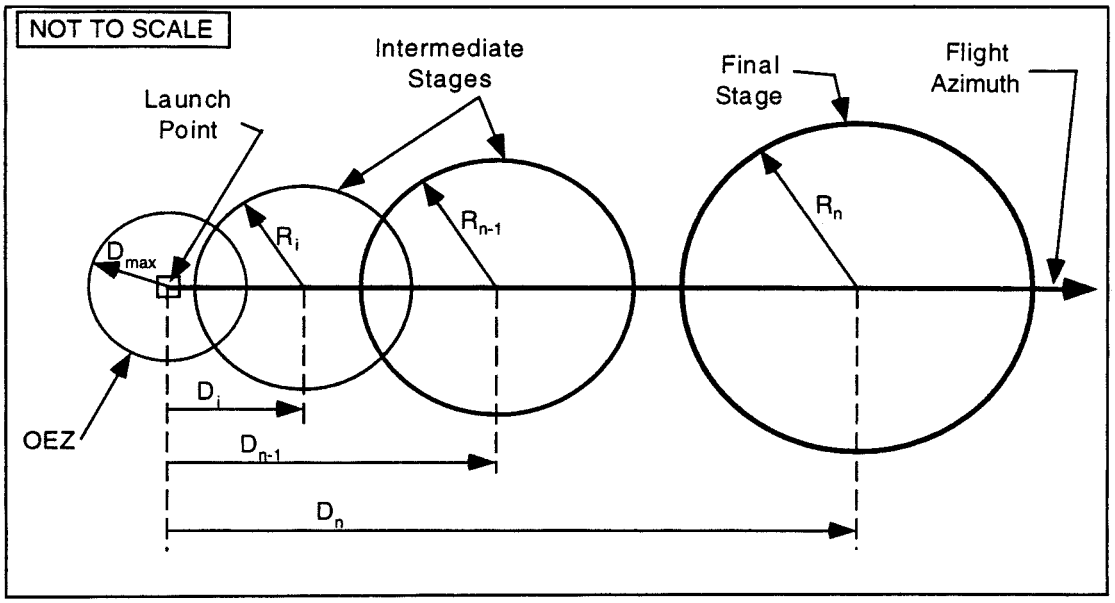

Figure D-1
Unguided Suborbital Launch Vehicle Overflight Exclusion Zone and Impact Dispersion Areas

(d) Evaluate the Overflight Exclusion Zone and Impact Dispersion Areas

(1) An applicant shall evaluate the overflight exclusion zone and each impact dispersion area for the presence of any populated areas. If an applicant determines that no populated area is located within the overflight exclusion zone or any impact dispersion area, then no additional steps are necessary.

(2) If a populated area is located in an overflight exclusion zone, an applicant may modify its proposal or demonstrate that there are times when no people are present or that the applicant has an agreement in place to evacuate the public from the overflight exclusion zone during a launch.

(3) If a populated area is located within any impact dispersion area, an applicant may modify its proposal and define a new overflight exclusion zone and new impact dispersion areas, or perform an impact risk analysis in accordance with paragraph (e).

(e) Impact Risk Analysis

(1) An applicant shall estimate the expected average number of casualties, E_C, within the impact dispersion areas according to the following method:

(i) An applicant shall calculate the E_c by summing the impact risk for the impact dispersion areas of the final launch vehicle stage and all intermediate stages. An applicant shall estimate E_c for the impact dispersion area of each stage by using equations D3 through D7 for each of the populated areas located within the impact dispersion areas.

(ii) An applicant shall estimate the probability of impacting inside the X and Y sectors of each populated area within each impact dispersion area using equations D3 and D4:

$$P_x = \frac{\left(\frac{x_2}{\sigma_x} - \frac{x_1}{\sigma_x}\right)}{6\sqrt{2\pi}} \cdot \left(\exp\left(\frac{-\left(\frac{x_1}{\sigma_x}\right)^2}{2} \right) + 4 \cdot \exp\left[\frac{-\left(\frac{x_1 + x_2}{2\sigma_x}\right)^2}{2} \right] + \exp\left(\frac{-\left(\frac{x_2}{\sigma_x}\right)^2}{2} \right) \right) \qquad \text{(Equation D3)}$$

where:

x_1, x_2 = closest and farthest downrange distance to populated area (see figure D–2)
σ_x = one-third of the impact dispersion radius (see figure D–2)
exp = exponential function (e^x)

$$P_y = \frac{\left(\frac{|y_2|}{\sigma_y} - \frac{|y_1|}{\sigma_y}\right)}{6\sqrt{2\pi}} \cdot \left(\exp\left(\frac{-\left(y_1/\sigma_y\right)^2}{2}\right) + 4 \cdot \exp\left[\frac{-\left(\frac{y_1 + y_2}{2\sigma_y}\right)^2}{2}\right] + \exp\left(\frac{-\left(y_2/\sigma_y\right)^2}{2}\right)\right) \quad \text{(Equation D4)}$$

where:

y_1, y_2 = closest and farthest cross range distance to the populated area (see figure D–2)
σ_y = one-third of the impact dispersion radius (see figure D–2)
exp = exponential function (e^x)

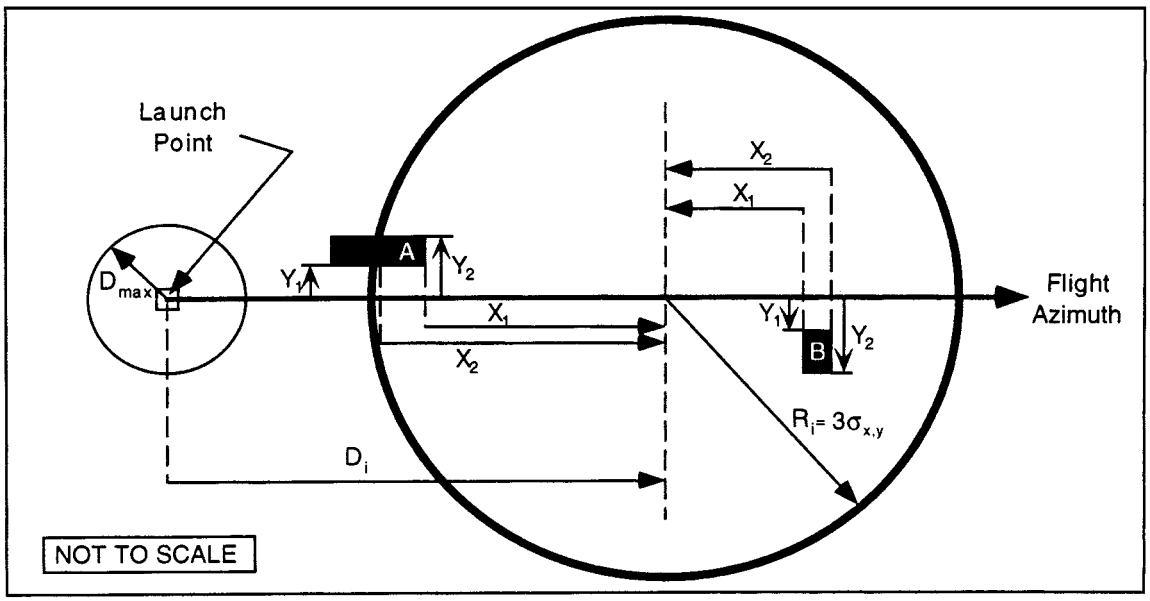

Figure D-2
Intermediate and Final Stage Impact Risk Analysis

(iii) If a populated area intersects the impact dispersion area boundary so that the x_2 or y_2 distance would otherwise extend outside the impact dispersion area, the x_2 or y_2 distance should be set equal to the impact dispersion area radius. The x_2 distance for populated area A in figure D–2 is an example.

(iv) If a populated area intersects the flight azimuth, an applicant shall solve equation D4 by obtaining the solution in two parts. An applicant shall determine, first, the probability between $y_1 = 0$ and $y_2 = a$ and, second, the probability between $y_1 = 0$ and $y_2 = b$, as depicted in figure D–3. The probability P_y is then equal to the sum of the probabilities of the two parts. If a populated area intersects the line that is normal to the flight azimuth on the impact point, an applicant shall solve equation D3 by obtaining the solution in two parts in the same manner as with the values of x.

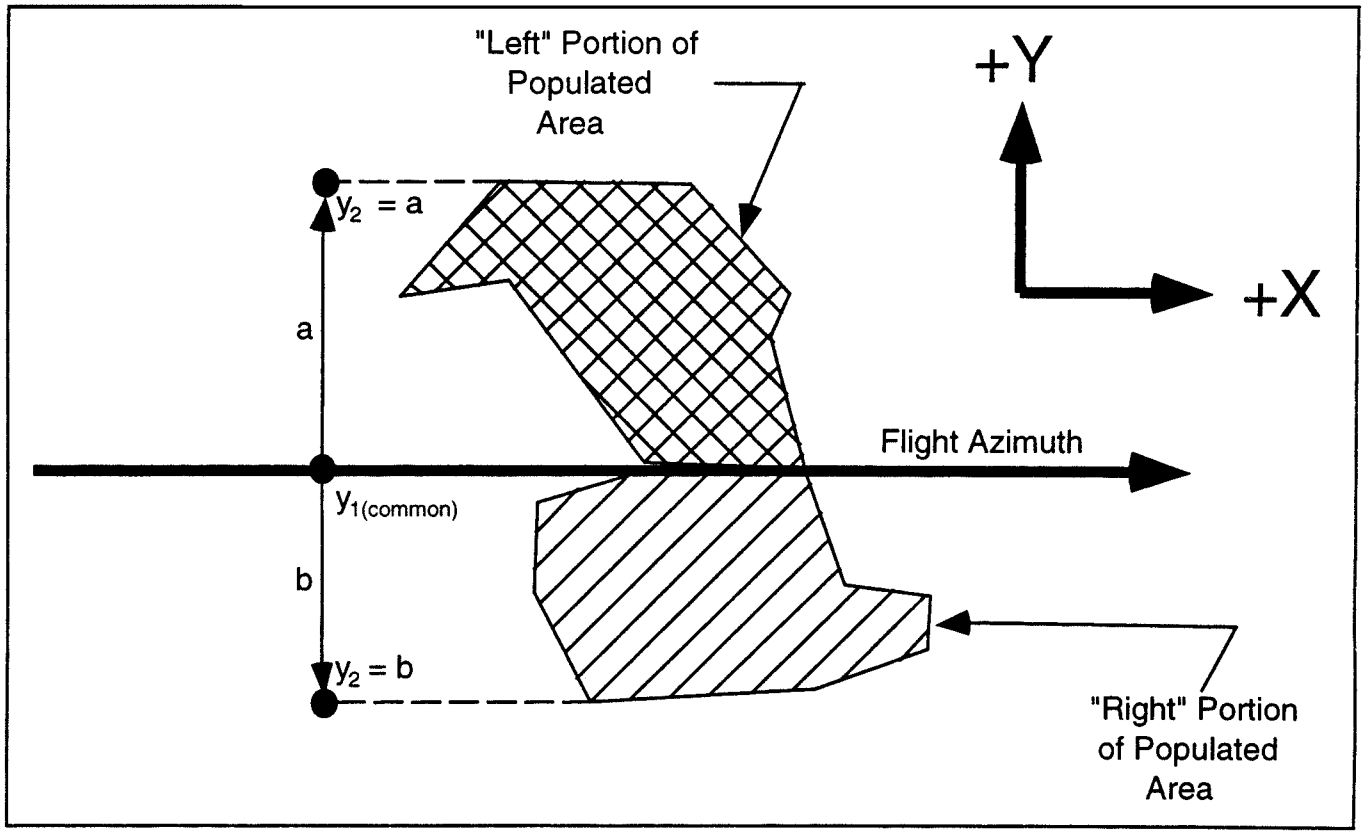

Figure D-3
Flight Azimuth Intersecting a Populated Area

(v) An applicant shall calculate the probability of impact (P_i) for each populated area using the following equation:

$$P_i = P_s \cdot P_x \cdot P_y \qquad \text{(Equation D5)}$$

where:
P_s = probability of success = 0.98

(vi) An applicant shall calculate the casualty expectancy for each populated area. E_{ck} is the casualty expectancy for a given populated area as shown in equation D6, where individual populated areas are designated with the subscript ''k''.

$$E_{ck} = P_i \cdot \left(\frac{A_c}{A_k}\right) \cdot N_k \qquad \text{(Equation D6)}$$

where:
$k \{ \{1, 2, 3, \ldots, n\}$
A_c = casualty area (from table D–1)
A_k = populated area
N_k = population in A_k

TABLE D–1.—EFFECTIVE CASUALTY AREA (A_c) VS. IMPACT RANGE

Impact range (nm)	Effective casualty area (miles^2)
0–4	9×10^{-3}
5–49	9×10^{-3}
50–1,749	1.1×10^{-5}
1,750–4,999	3.6×10^{-6}
5,000–more	3.6×10^{-6}

(vii) An applicant shall estimate the total risk using the following summation of risk:

$$Ec(\text{Corridor}) = \left(\sum_{k=1}^{n} E_{c_k}\right) \qquad \text{(Equation D7)}$$

(viii) Alternative casualty expectancy (E_c) analysis. An applicant may employ specified variations to the analysis defined by subparagraphs (d)(1)(i)–(vii). Those variations are identified in subparagraphs (viii)(A) through (F) of this paragraph. Subparagraphs (A) through (D) permit an applicant to make conservative assumptions that would lead to an overestimation of E_c compared with the analysis defined by subparagraphs (d)(1)(i)–(vii). In subparagraphs (E) and (F), an applicant that would otherwise fail the analysis prescribed by subparagraphs (d)(1)(i)–(vii) may avoid (d)(1)(i)–(vii)'s overestimation of the

probability of impact in each populated area. An applicant employing a variation shall identify the variation used, show and discuss the specific assumptions made to modify the analysis defined by subparagraphs (d)(1)(i)–(vii), and demonstrate how each assumption leads to overestimation of the corridor E_c compared with the analysis defined by subparagraphs (d)(1)(i)–(vii).

(A) Assume that P_x and P_y have a value of 1.0 for all populated areas.

(B) Combine populated areas into one or more larger populated areas, and use a population density for the combined area or areas equal to the most densely populated area.

(C) For any given populated area, assume P_x has a value of one.

(D) For any given populated area, assume P_y has a value of one.

(E) For a given populated area, divide the populated area into smaller rectangles, determine P_i for each individual rectangle, and sum the individual impact probabilities to determine P_i for the entire populated area.

(F) For a given populated area, use the ratio of the populated area to the area of the P_i rectangle used in the subparagraph (d)(1)(i)–(vii) analysis.

(2) If the estimated expected casualty does not exceed 30×10^{-6}, the FAA will approve the launch point.

(3) If the estimated expected casualty exceeds 30×10^{-6}, then an applicant may modify its proposal and then repeat the impact risk analysis in accordance with this appendix D. If no set of impact dispersion areas exist which satisfy the FAA's risk threshold, the applicant's proposed launch site will fail the launch site location review.

Appendix E to Part 420—Tables for Explosive Site Plan

TABLE E–1.—QUANTITY DISTANCE REQUIREMENTS FOR SOLID EXPLOSIVES

Quantity (lbs.) (over)	Quantity (lbs.) (not over)	Public area distance (ft.) for division 1.1	Public area distance (ft.) for division 1.3	Intraline distance (ft.) for division 1.1	Intraline distance (ft.) for division 1.3
0	1,000	1,250	75	$D = 18\ W^{1/3}$	50
1,000	5,000		115		75
5,000	10,000		150		100
10,000	20,000		190		125
20,000	30,000		215		145
30,000	40,000	$D = 40\ W^{1/3}$	235		155
40,000	50,000		250		165
50,000	60,000		260		175
60,000	70,000		270		185
70,000	80,000		280		190
80,000	90,000		195		195
90,000	100,000		300		200
100,000	200,000	$D=2.42\ W^{0.577}$	375		250
200,000	250,000		413		275
250,000	300,000	$D = 50\ W^{1/3}$	450		300
300,000	400,000		525		350
400,000	500,000		600		400
500,000	1,000,000		800		500
Greater than 1,000,000		$D = 50\ W^{1/3}$	$D = 8\ W^{1/3}$	$D = 5\ W^{1/3}$	

''D'' equals the minimum separation distance in feet.
''W'' equals the NEW of propellant.

TABLE E–2.—LIQUID PROPELLANT EXPLOSIVE EQUIVALENTS

Propellant combinations	Explosive equivalent
LO_2/LH_2	The larger of: $8W^{2/3}$ where W is the weight of LO_2/LH_2, or 14% of W.
$LO_2/LH_2 + LO_2/RP–1$	Sum of (20% for $LO_2/RP–1$) + the larger of: $8W^{2/3}$ where W is the weight of LO_2/LH_2, or 14% of W.
$LO_2/R–1$	20% of W up to 500,000 pounds plus 10% of W over 500,000 pounds, where W is the weight of $LO_2RP–1$.
N_2O_4/N_2H_4 (or UDMH or UDMH/N_2H_4 Mixture)	10% of W, where W is the weight of the propellant.

TABLE E–3.—PROPELLANT HAZARD AND COMPATIBILITY GROUPINGS AND FACTORS TO BE USED WHEN CONVERTING GALLONS OF PROPELLANT INTO POUNDS

Propellant	Hazard group	Compatibility group	Pounds/gallon	At temperature °F
Hydrogen Peroxide	II	A	11.6	68
Hydrazine	III	C	8.4	68
Liquid Hydrogen	III	C	0.59	−423
Liquid Oxygen	II	A	9.5	−297
Nitrogen Tetroxide	I	A	12.1	68
RP–1	I	C	6.8	68
UDMH	III	C	6.6	68
UDMH/Hydrazine	III	C	7.5	68

TABLE E–4.—HAZARD GROUP I

Pounds of propellant		Public area and incompatible	Intragroup and compatible	Pounds of propellant		Public area and incompatible	Intragroup and compatible
Over	Not over	Distance in feet	Distance in feet	Over	Not over	Distance in feet	Distance in feet
0	100	30	25	5,000	6,000	80	60
100	200	35	30	6,000	7,000	85	65
200	300	40	35	7,000	8,000	85	65
300	400	45	35	8,000	9,000	90	70
400	500	50	40	9,000	10,000	90	70
500	600	50	40	10,000	15,000	95	75
600	700	55	40	15,000	20,000	100	80
700	800	55	45	20,000	25,000	105	80
800	900	60	45	25,000	30,000	110	85
900	1,000	60	45	30,000	35,000	110	85
1,000	2,000	65	50	35,000	40,000	115	85
2,000	3,000	70	55	40,000	45,000	120	90
3,000	4,000	75	55	45,000	50,000	120	90
4,000	5,000	80	60	50,000	60,000	125	95
60,000	70,000	130	95	500,000	600,000	185	140
70,000	80,000	130	100	600,000	700,000	190	145
80,000	90,000	135	100	700,000	800,000	195	150
90,000	100,000	135	105	800,000	900,000	200	150
100,000	125,000	140	110	900,000	1,000,000	205	155
125,000	150,000	145	110	1,000,000	2,000,000	235	175
150,000	175,000	150	115	2,000,000	3,000,000	255	190
175,000	200,000	155	115	3,000,000	4,000,000	265	200
200,000	250,000	160	120	4,000,000	5,000,000	275	210
250,000	300,000	165	125	5,000,000	6,000,000	285	215
300,000	350,000	170	130	6,000,000	7,000,000	295	220
350,000	400,000	175	130	7,000,000	8,000,000	300	225
400,000	450,000	180	135	8,000,000	9,000,000	305	230
450,000	500,000	180	135	9,000,000	10,000,000	310	235

TABLE E–5.—HAZARD GROUP II

Pounds of propellant		Public area and incompatible	Intragroup and compatible	Pounds of propellant		Public area and incompatible	Intragroup and compatible
Over	Not over	Distance in feet	Distance in feet	Over	Not over	Distance in feet	Distance in feet
0	100	60	30	50,000	60,000	250	125
100	200	75	35	60,000	70,000	255	130
200	300	85	40	70,000	80,000	260	130
300	400	90	45	80,000	90,000	265	135
400	500	100	50	90,000	100,000	270	135
500	600	100	50	100,000	125,000	285	140
600	700	105	55	125,000	150,000	295	145
700	800	110	55	150,000	175,000	305	150
800	900	115	60	175,000	200,000	310	155
900	1,000	120	60	200,000	250,000	320	160
1,000	2,000	130	65	250,000	300,000	330	165
2,000	3,000	145	70	300,000	350,000	340	170
3,000	4,000	150	75	350,000	400,000	350	175
4,000	5,000	160	80	400,000	450,000	355	180
5,000	6,000	165	80	450,000	500,000	360	180
6,000	7,000	170	85	500,000	600,000	375	185
7,000	8,000	175	85	600,000	700,000	385	190
8,000	9,000	175	90	700,000	800,000	395	195
9,000	10,000	180	90	800,000	900,000	405	200
10,000	15,000	195	95	900,000	1,000,000	410	205
15,000	20,000	205	100	1,000,000	2,000,000	470	235
20,000	25,000	215	105	2,000,000	3,000,000	505	255
25,000	30,000	220	110	3,000,000	4,000,000	535	265
30,000	35,000	225	110	4,000,000	5,000,000	555	275
35,000	40,000	230	115	5,000,000	6,000,000	570	285
40,000	45,000	235	120	6,000,000	7,000,000	585	295
45,000	50,000	240	120	7,000,000	8,000,000	600	300
				8,000,000	9,000,000	610	305
				9,000,000	10,000,000	620	310

TABLE E–6.—HAZARD GROUP III

Pounds of propellant		Public area and incompatible	Intragroup and compatible	Pounds of propellant		Public area and incompatible	Intragroup and compatible
Over	Not over	Distance in feet	Distance in feet	Over	Not over	Distance in feet	Distance in feet
0	100	600	30	60,000	70,000	1,200	130
100	200	600	35	70,000	80,000	1,200	130
200	300	600	40	80,000	90,000	1,200	135
300	400	600	45	90,000	100,000	1,200	135
400	500	600	50	100,000	125,000	1,800	140
500	600	600	50	125,000	150,000	1,800	145
600	700	600	55	150,000	175,000	1,800	150
700	800	600	55	175,000	200,000	1,800	155
800	900	600	60	200,000	250,000	1,800	160
900	1,000	600	60	250,000	300,000	1,800	165
1,000	2,000	600	65	300,000	350,000	1,800	170
2,000	3,000	600	70	350,000	400,000	1,800	175
3,000	4,000	600	75	400,000	450,000	1,800	180
4,000	5,000	600	80	450,000	500,000	1,800	180
5,000	6,000	600	80	500,000	600,000	1,800	185
6,000	7,000	600	85	600,000	700,000	1,800	190
7,000	8,000	600	85	700,000	800,000	1,800	195
8,000	9,000	600	90	800,000	900,000	1,800	200
9,000	10,000	600	90	900,000	1,000,000	1,800	205
10,000	15,000	1,200	95	1,000,000	2,000,000	1,800	235
15,000	20,000	1,200	100	2,000,000	3,000,000	1,800	255
20,000	25,000	1,200	105	3,000,000	4,000,000	1,800	265
25,000	30,000	1,200	110	4,000,000	5,000,000	1,800	275
30,000	35,000	1,200	110	5,000,000	6,000,000	1,800	285
35,000	40,000	1,200	115	6,000,000	7,000,000	1,800	295
40,000	45,000	1,200	120	7,000,000	8,000,000	1,800	300
45,000	50,000	1,200	120	8,000,000	9,000,000	1,800	305
50,000	60,000	1,200	125	9,000,000	10,000,000	1,800	310

TABLE E–7.—DISTANCES WHEN EXPLOSIVE EQUIVALENTS APPLY

TNT equivalent weight of propellants	Distance in feet	
Not over	To public area	Intraline unbarricaded
100	1250	80
200	1250	100
300	1250	120
400	1250	130
500	1250	140
600	1250	150
700	1250	160
800	1250	170
900	1250	180
1,000	1250	190
1,500	1250	210
2,000	1250	230
3,000	1250	260
4,000	1250	280
5,000	1250	300
6,000	1250	320

TABLE E–7.—DISTANCES WHEN EXPLOSIVE EQUIVALENTS APPLY—Continued

TNT equivalent weight of propellants	Distance in feet	
Not over	To public area	Intraline unbarricaded
7,000	1250	340
8,000	1250	360
9,000	1250	380
10,000	1250	400
15,000	1250	450
20,000	1250	490
25,000	1,250	530
30,000	1,250	560
35,000	1,310	590
40,000	1,370	620
45,000	1,425	640
50,000	1,475	660
55,000	1,520	680
60,000	1,565	700
65,000	1,610	720

TABLE E–7.—DISTANCES WHEN EXPLOSIVE EQUIVALENTS APPLY—Continued

TNT equivalent weight of propellants	Distance in feet	
Not over	To public area	Intraline unbarricaded
70,000	1,650	740
75,000	1,685	770
80,000	1,725	780
85,000	1,760	790
90,000	1,795	800
95,000	1,825	820
100,000	1,855	830
125,000	2,115	900
150,000	2,350	950
175,000	2,565	1,000
200,000	2,770	1,050

[FR Doc. 00–26088 Filed 10–18–00; 8:45 am]

BILLING CODE 4910–13–P

Federal Register

Thursday,
October 19, 2000

Part III

National Aeronautics and Space Administration

14 CFR Parts 1260 and 1274
NASA Grants and Cooperative Agreements; Final Rule

NATIONAL AERONAUTICS AND SPACE ADMINISTRATION

14 CFR Parts 1260 and 1274

NASA Grants and Cooperative Agreements

AGENCY: National Aeronautics and Space Administration (NASA).

ACTION: Final rule.

SUMMARY: This final rule revises NASA's grant and cooperative agreement regulations in order to clarify and amplify administrative requirements. Revisions have been made to reduce administrative requirements on grant and cooperative agreement recipients and ensure that uniform policies are followed by NASA centers.

EFFECTIVE DATE: October 19, 2000.

FOR FURTHER INFORMATION CONTACT: Jeff Lupis, NASA Headquarters, Code HS, Washington, DC 20546, telephone: (202) 358–0462; e-mail: jlupis@hq.nasa.gov.

SUPPLEMENTARY INFORMATION:

A. Background

NASA is adopting as final, with changes, the proposed rule published in the **Federal Register** (64 FR 50334–50388, September 16, 1999) that revises the NASA Grant and Cooperative Agreement Handbook, 14 CFR parts 1260 and 1274. A total of 10 organizations submitted comments in response to the proposed rule. All comments were considered in the development of this final rule. Editorial and administrative changes are also included in this final rule. Changes made to this final rule include clarification of policies in the following areas: Procedures for acquisition of property by grant recipients, procedures for no-cost grant extensions, policies on patent rights and invention and reporting rights, timeframes and procedures for closeout of grant files, situations requiring resource contributions for grants and cooperative agreements with commercial firms, procedures for making payments to commercial firms, requirements for annual civil rights certifications, performance of research with foreign organizations on a no-exchange-of-funds basis, and termination procedures. All the revisions in this final rule are considered administrative or editorial and do not involve a significant change in Agency policy.

B. Regulatory Flexibility Act

NASA certifies that this final rule will not have a significant economic impact on a substantial number of small entities within the meaning of the Regulatory Flexibility Act, 5 U.S.C. 601 *et seq.* The revisions made under this final rule are limited to administrative changes to the grant and cooperative agreement award and administration process, and other changes (e.g. vesting of title to property to grant recipients) will not have a significant economic impact.

C. Paperwork Reduction Act

The Paperwork Reduction Act applies to this final rule, in that it incorporates a new policy requiring Central Contractor Registration (CCR) for grant and cooperative agreement recipients. An Office of Management and Budget (OMB) approval for data collection has been approved under OMB Control Number 2700–0097.

List of Subjects in 14 CFR Parts 1260 and 1274

Grant Programs—Science and Technology

R. Scott Thompson,

Acting Associate Administrator for Procurement.

Proposed Rule Adopted as Final Rule With Changes

Accordingly, 14 CFR Chapter V is amended as follows:

1. Part 1260 is revised to read as follows:

PART 1260—GRANTS AND COOPERATIVE AGREEMENTS

Subpart A—General

Sec.
1260.1 Authority.
1260.2 Purpose.
1260.3 Definitions.
1260.4 Applicability.
1260.5 Amendment.
1260.6 Publication.
1260.7 Deviations.

Pre-Award Requirements

1260.10 Proposals.
1260.11 Evaluation and selection.
1260.12 Choice of award instrument.
1260.13 Award procedures.
1260.14 Limitations.
1260.15 Format and numbering.
1260.16 Distribution.

Provisions

1260.20 Provisions.
1260.21 Compliance with OMB Circular A–110.
1260.22 Technical publications and reports.
1260.23 Extensions.
1260.24 Termination and enforcement.
1260.25 Change in principal investigator or scope.
1260.26 Financial management.
1260.27 Equipment and other property.
1260.28 Patent rights.
1260.29 [Reserved].
1260.30 Rights in data.
1260.31 National security.
1260.32 Nondiscrimination.
1260.33 Subcontracts.
1260.34 Clean air and water.
1260.35 Investigative requirements.
1260.36 Travel and transportation.
1260.37 Safety.
1260.38 Drug-free workplace.

Special Conditions

1260.50 Special conditions.
1260.51 Cooperative agreement special condition.
1260.52 Multiple year grant or cooperative agreement.
1260.53 Incremental funding.
1260.54 Cost sharing.
1260.55 Reports substitution.
1260.56 Withholding.
1260.57 New technology.
1260.58 Designation of new technology representative and patent representative.
1260.59 Choice of law.
1260.59A Invention reporting and rights.
1260.60 Public information.
1260.61 Allocation of risk/liability.
1260.62 Payment—to foreign organizations.
1260.63 Customs clearance and visas.
1260.64 Taxes.
1260.65 Exchange of technical data and goods.
1260.66 Listing of reportable equipment and other property.
1260.67 Equipment and other property under grants with commercial firms.
1260.68 Invoices and payments under grants with commercial firms.
1260.69 Electronic funds transfer payment methods.

Post-Award Requirements

1260.70 Delegation of administration.
1260.71 Supplements and renewals.
1260.72 Adherence to original budget estimates.
1260.73 Transfers, novations, and change of name agreements.
1260.74 Property use, disposition, and vesting of title.
1260.75 Summary of report requirements.
1260.76 Termination and enforcement.
1260.77 Closeout procedures.

Appendix to Subpart A to Part 1260—Listing of Exhibits

Subpart B—Uniform Administrative Requirements for Grants and Cooperative Agreements with Institutions of Higher Education, Hospitals, and Other Non-Profit Organizations

General

1260.101 Purpose.
1260.102 Definitions.
1260.103 Effect on other issuances.
1260.104 Deviations.
1260.105 Subawards.

Pre-Award Requirements

1260.110 Purpose.
1260.111 Pre-award policies.
1260.112 Forms for applying for Federal assistance.
1260.113 Debarment and suspension.
1260.114 Special award conditions.
1260.115 Metric system of measurement.
1260.116 Resource Conservation and Recovery Act (RCRA).
1260.117 Certifications and representations.

Post-Award Requirements

Financial and Program Management

1260.120 Purpose of financial and program management.
1260.121 Standards for financial management systems.
1260.122 Payment.
1260.123 Cost sharing or matching.
1260.124 Program income.
1260.125 Revision of budget and program plans.
1260.126 Non-Federal audits.
1260.127 Allowable costs.
1260.128 Period of availability of funds.

Property Standards

1260.130 Purpose of property standards.
1260.131 Insurance coverage.
1260.132 Real property.
1260.133 Federally-owned and exempt property.
1260.134 Equipment.
1260.135 Supplies and other expendable property.
1260.136 Intangible property.
1260.137 Property trust relationship.

Procurement Standards

1260.140 Purpose of procurement standards.
1260.141 Recipient responsibilities.
1260.142 Codes of conduct.
1260.143 Competition.
1260.144 Procurement procedures.
1260.145 Cost and price analysis.
1260.146 Procurement records.
1260.147 Contract administration.
1260.148 Contract provisions.

Reports and Records

1260.150 Purpose of reports and records.
1260.151 Monitoring and reporting program performance.
1260.152 Financial reporting.
1260.153 Retention and access requirements for records.

Termination and Enforcement

1260.160 Purpose of termination and enforcement.
1260.161 Termination.
1260.162 Enforcement.

After-the-Award Requirements

1260.170 Purpose.
1260.171 Closeout procedures.
1260.172 Subsequent adjustments and continuing responsibilities.
1260.173 Collections of amounts due.

Appendix A to Subpart B of Part 1260—Contract Provisions

Authority: 42 U.S.C. 2473(c)(1), Pub. L. 97–258, 96 Stat. 1003 (31 U.S.C. 6301 *et seq.*), and OMB Circular A–110.

Subpart A—General

§ 1260.1 Authority.

(a) The National Aeronautics and Space Administration (NASA) awards grants and cooperative agreements under the authority of 42 U.S.C. 2473(c)(5), the National Aeronautics and Space Act. This part 1260 is issued under the authority of 42 U.S.C. 2473(c)(1), Pub. L. 97–258, 96 Stat. 1003 (31 U.S.C. 6301 *et seq.*), and OMB Circular A–110.

(b) The Office of Management and Budget (OMB) approved information collection under the Paperwork Reduction Act and assigned OMB control numbers 2700–0047, Property Management and Control; 2700–0048, Patents; 2700–0049, Financial Management and Control; and 2700–0097, Central Contractor Registration.

§ 1260.2 Purpose.

(a) This subpart A of the NASA Grant and Cooperative Agreement Handbook (also subpart A of 14 CFR part 1260), provides supplemental NASA policies that clarify and amplify government-wide regulations for awarding and administering grants and cooperative agreements with educational and non-profit organizations. The government-wide regulations that this subpart supplements are set forth in OMB Circular A–110 ''Uniform Administrative Requirements for Grants and Agreements With Institutions of Higher Education, Hospitals, and Other Non-Profit Organizations.'' (NASA has adopted OMB Circular A–110 as subpart B of this part 1260.)

(b) As required by the Office of Management and Budget (OMB), NASA has also adopted the standards set forth in OMB Circular No. A–133, Audits of States, Local Governments, and Non-Profit Organizations.

§ 1260.3 Definitions.

(a) The following definitions are a supplement to the subpart B definitions set forth at § 1260.102. Additional definitions applicable to specific categories of grants and cooperative agreements are set forth at 14 CFR 1273.3 and 14 CFR 1274.102.

(b) Throughout subpart A to this part 1260, the term ''grant'' includes ''cooperative agreement'' unless otherwise indicated.

Administrative grant officer means a Federal employee delegated responsibility for grant administration; *e.g.*, a NASA grant officer who has retained grant administration responsibilities, or an Office of Naval Research (ONR) grant officer delegated grant administration by a NASA grant officer.

Amendment means any document used to effect modifications to grants and cooperative agreements. Amendments may be issued unilaterally at the discretion of the grant officer.

Commercial firm means any corporation, trust or other organization which is organized primarily for profit.

Effective date means the date work can begin, which could be earlier or later than the date of signature on a basic award or modification. Expenditures made prior to award of a grant are incurred at the recipient's risk.

Expiration date means the date of completion specified in the grant, after which expenditures may not be charged against the grant except to satisfy obligations to pay allowable costs committed on or before that date.

Historically Black Colleges and Universities means institutions determined by the Secretary of Education to meet the requirements of 34 CFR 608.2 and listed therein.

Minority educational institution means an institution determined by the Secretary of Education to meet the requirements of 34 CFR 637.4.

Non-profit organization means an organization that qualifies for the exemption from taxation under section 501 of the Internal Revenue Code of 1954, as amended, 26 U.S.C. 501.

Progress report means a concise statement of work accomplished during the report period (see §§ 1260.22 and 1260.75(b)(3)).

Recipient acquired equipment means equipment purchased or fabricated with grant funds by a recipient for the performance of work under its grant.

Small business concern means a concern, including its affiliates, which is independently owned and operated, not dominant in the field of operation in which it is bidding, and qualifies as a small business under the criteria and size standards in 13 CFR part 121.

Small disadvantaged business concern means a small business concern owned and controlled by individuals who are both socially and economically disadvantaged and meets the criteria set forth at 13 CFR part 24.

Summary of research means a document summarizing the results of the entire project, which includes bibliographies, abstracts, and lists of other media in which the research was discussed.

Women-owned small business concern means a small business concern that is at least 51 percent owned by women who are U.S. citizens and who also control and operate the business (15 U.S.C. 637(d)).

§ 1260.4 Applicability.

(a) Subparts A and B of this part 1260 establish policies and procedures for grants and cooperative agreements awarded by NASA to institutions of higher education, hospitals, and other non-profit organizations.

(b) Subject to the special considerations in this paragraph,

subparts A and B of this part 1260 are also applicable to NASA grants and cooperative agreements awarded to commercial firms which do not involve cost sharing. (This does not prohibit voluntary cost sharing.) When the commercial firm is expected to receive substantial compensating benefits for performance of the work, resource contributions are required for the award of a grant or cooperative agreement. For policies on cooperative agreements with commercial organizations requiring resource contributions by the Recipient, see 14 CFR part 1274.

(1) The allowability of costs incurred by commercial firms is determined in accordance with the provisions of the Federal Acquisition Regulation (FAR) at 48 CFR part 31.

(2) NASA does not allow for payment of profit or fee to commercial firms under grant awards.

(3) When applying the policies set forth under § 1260.74, the grant officer shall vest title to any equipment purchased under the grant with the Government. The special condition at § 1260.67, Equipment and Other Property Under Grants With Commercial Firms, shall be incorporated into all grants with commercial firms in place of the provision at § 1260.27, Equipment and Other Property.

(4) Due to differing NASA patent policies applicable to large businesses, special conditions at § 1260.57, New Technology, and § 1260.58, Designation of New Technology Representative and Patent Representative, shall be incorporated into all grants with commercial firms other than those with small businesses, in place of the provision at § 1260.28, Patent Rights. Grants with small businesses should retain the § 1260.28 provision.

(5) Payments under grants with commercial firms will be made based on incurred costs. NASA Form 272 is not required. Commercial firms will be required to submit invoices on a no more than quarterly basis. Payments to be made on a more than quarterly basis require the written approval of the grant officer. The center finance office should also be informed when payments are to be made on other than a quarterly basis. The special condition at § 1260.68, Invoices and Payments Under Grants With Commercial Firms, shall be incorporated into all grants with commercial firms in place of the provision at § 1260.26, Financial Management.

(6) Payments will be made to commercial firms via electronic funds transfer. The special condition at § 1260.69, Electronic Funds Transfer Payment Method, shall be incorporated into all grants with commercial firms.

(7) Delegation of grant administration functions consistent with the policies set forth at § 1260.70 (*i.e.*, property administration and closeout are to be delegated) will be made to the cognizant field office of the Defense Contract Management Agency instead of to the Office of Naval Research. Delegations will be made using NASA Form 1674, Letter of Delegation, for the Administration of Grants and Cooperative Agreements (Exhibit F to subpart A of this part 1260, available at the address given in Exhibit F). Cognizant offices for performing administration under individual grants are set forth in the ''DoD Directory of Contract Administration Services Components,'' which is available on the internet at: http://www.dcmc.hq.dla.mil/casbook/casbook.htm

§ 1260.5 Amendment.

This part 1260 will be amended by publication of changes in the **Federal Register**. Changes will be issued as Grant Notices and incorporated into the official version of the handbook located at the internet web site.

§ 1260.6 Publication.

The official site for accessing the NASA Grant and Cooperative Agreement Handbook, including current Grant Notices, is on the internet at: http://ec.msfc.nasa.gov/hq/grcover.htm

§ 1260.7 Deviations.

(a) A deviation is required for any of the following:

(1) When a prescribed provision (but not a special condition) set forth verbatim in this part 1260 is modified or omitted.

(2) When a provision is set forth in this part 1260, but not for use verbatim, and the Center substitutes a provision which is inconsistent with the intent, principle, and substance of the provision.

(3) When a form prescribed by this part 1260 is altered or another form is used in its place.

(4) When limitations, imposed by this handbook upon the use of a grant provision, form, procedure, or any other grant action, are changed.

(5) When a form is created for recipient use that constitutes a ''Collection of Information'' within the meaning of the Paperwork Reduction Act (44 U.S.C. 35) and its implementation in 5 CFR part 1320.

(b) Requests for authority to deviate from this part 1260 shall be submitted to the Office of Procurement, NASA Headquarters, Procurement Operations Division (HS). Requests, signed by the procurement officer, shall contain:

(1) A full description of the deviation, the circumstances in which it will be used, and identification of the requirement from which a deviation is sought;

(2) The rationale for the request, pertinent background information, and the intended effect of the deviation;

(3) The name of the recipient, identification of the grant affected, and the dollar value;

(4) A statement as to whether the deviation has been requested previously, and, if so, details of that request; and

(5) A copy of legal counsel's concurrence or comments.

(c) Where it is necessary to obtain a deviation on OMB Circular A–110 (subpart B of this part 1260), Code HS will process all necessary documents in accordance with § 1260.104.

Pre-Award Requirements

§ 1260.10 Proposals.

(a) Consistent with 31 U.S.C. 6301(3), NASA's policy is to use competitive procedures to award grants whenever possible. A grant can result from:

(1) A proposal submitted in response to a Broad Agency Announcement (BAA) such as a NASA Research Announcement (NRA) or an Announcement of Opportunity (AO), a Cooperative Agreement Notice (CAN), an Agencywide program announcement such as the Graduate Student Research Program, or other forms of announcements approved by the Associate Administrator for Procurement (HS). NRA's are described in the NASA FAR Supplement (NFS) 48 CFR 1835.016. AO's are described in 48 CFR part 1872.

(2) An *Unsolicited Proposal* for new and innovative ideas. Guidance on the submission of unsolicited proposals is contained in the Federal Acquisition Regulation (FAR) 48 CFR subpart 15.6 and (NFS) 48 CFR subpart 1815.6. The synopsis requirement in FAR Part 5, however, does not apply to the grant process. Contact with NASA technical personnel prior to proposal submission is encouraged to determine if preparation of a proposal is warranted. These discussions should be limited to understanding NASA research needs and do not jeopardize the unsolicited status of any subsequently submitted proposal.

(b) The proposal shall contain a detailed narrative description of the work to be undertaken, including the objectives of the project and the applicant's plan for carrying it out.

(1) All proposals shall include budget data as prescribed in the Budget Summary (Exhibit A to subpart A of this part 1260, available at the address given in Exhibit A). Narrative detail must support the proposed budget as required in Exhibit A.

(i) The recipient institution is responsible for ensuring that costs charged are allowable, allocable, and reasonable under the applicable cost principles governed by OMB Circular No. A–21 or A–122. For other details see § 1260.127.

(ii) Subject to applicable cost principles, facilities and administrative cost rates are negotiated between recipients and the cognizant agencies assigned under OMB Circular No. A–21. NASA is required to apply the applicable negotiated rate for all grants awarded to the recipient.

(iii) NASA may accept cost sharing when voluntarily offered. For further guidance see § 1260.123. For grants and cooperative agreements with commercial organizations that involve costs sharing, see 14 CFR part 1274. The amount of cost sharing will not be a factor in determining whether to select a proposal for award. However, recipients may be requested to secure nonfederal matching funds equal to the program portion of training and education grants. In accordance with NASA policy to foster continuity of research, multiple year grant proposals are encouraged, where appropriate, for a period generally up to three years. Proposals for multiple year grants shall describe the entire research project and include a complete budget for year one and separate estimates for each subsequent year.

(2) A Taxpayer Identification Number (TIN) must be included with the address listed on the proposal. If an award is made, advance payments cannot be made without a TIN (31 U.S.C. 7702(c)(1)).

(3) Prior to implementation of the Integrated Financial Management (IFM) System at each center, all grant and cooperative agreement recipients are required to register in the Department of Defense (DoD) Central Contractor Registration (CCR) database. Registration is required in order to obtain a Commercial and Government Entity (CAGE) code, which will be used as a grant and cooperative agreement identification number for the new system. The grant officer shall verify that the prospective awardee is registered in the CCR database using the DUNS number or, if applicable, the DUNS+4 number, via the Internet at *http://www.ccr2000.com* or by calling toll free: 800–841–4431, commercial: 696–961–5757.

(c)(1) Grant officers are required to ensure that all necessary certifications, disclosures, and assurances have been obtained prior to awarding a grant or cooperative agreement.

(2) Each new proposal shall include a certification for debarment and suspension under the requirements of 14 CFR 1265.510 and 1260.117.

(3) Each new proposal for an award exceeding $100,000 shall include a certification, and a disclosure form (SF LLL) if required, on Lobbying under the requirements of 14 CFR 1271.110 and 1260.117.

(4) Annually, recipients must furnish assurances on NASA Form 1206 of compliance with civil rights statutes specified in 14 CFR parts 1250 through 1253.

§ 1260.11 Evaluation and selection.

(a) Technical evaluation of proposals will be conducted by the cognizant NASA technical office and may be based on peer reviews.

(b) Under NRA's, AO's, other BAA's, and CAN's, the selecting official will furnish documentation requested by the grant officer, (including a copy of the NRA, selection statement, and peer review evaluation if requested), to confirm that the award is being made as a result of a selection under a NRA, AO, other BAA, or CAN. The technical office will forward to the grant office a completed award package, including a funded procurement request, technical evaluation of the proposed budget, and other support documentation, at least 29 days prior to the requested award date, or before the expiration of the funded period in the case of the renewal of an existing effort.

(c) If a proposal is not selected, the proposer will be notified by the selecting official in accordance with the procedures set forth in the NRA, AO, CAN, or BAA.

(d) Unsolicited proposals will be evaluated in accordance with the following procedure:

(1) Evaluations of unsolicited proposals to be awarded as grants or cooperative agreements will be conducted using the same criteria used for reviewing unsolicited proposals to be awarded as contracts, as set forth at FAR subpart 15.6 and (NFS) 48 CFR subpart 1815.6. Normally, unsolicited proposals are accepted to perform discrete projects with defined anticipated outcomes and completion dates. An unsolicited proposal that results in a grant or cooperative agreement with no defined end date, and which requires subsequent submission of follow-on unsolicited proposals to ensure continuation of the effort, should be closely reviewed to ensure that it meets the FAR definition for a valid unsolicited proposal.

(2) An unsolicited proposal recommended for acceptance shall be supported by a Justification for Acceptance of an Unsolicited Proposal (JAUP) prepared by the cognizant technical office. The JAUP shall be submitted for the approval of the grant officer after review and concurrence at a level above the technical officer. However, this review and concurrence is not required for technical officers at a division chief or higher level. The grant officer's signature on the award document will indicate approval of the JAUP.

(3) NASA will notify in writing organizations that submit unsolicited proposals that will not be funded. Method of notification is at the discretion of the grant officer. Proposals will be returned only when requested. Agency procedures for handling unsolicited proposals are specified at (NFS) 48 CFR 1815.606.

(e) For awards made non-competitively, written justifications for equipment or travel will be submitted by the technical office for grant officer approval when more than half of the proposed budget is for equipment or travel and associated indirect cost. The justification shall describe the extent to which the equipment or travel is necessary. The grant officer's signature on the award will indicate approval of the justification.

(f) The evaluation of the proposal budget will conform to the following procedure:

(1) The technical officer will review the proposer's estimated cost for conformance to program requirements and fund availability. The results of this review shall be recorded in Column B of the proposed Budget Summary Form (Exhibit A to subpart A of this part 1260, available at the address given in Exhibit A). New budgets are not required when the program office recommended funding is within twenty percent (20 percent) of the proposed amount, provided that, if requested by the proposer, a revised scope of work based on the recommended funding is submitted by the proposer for acceptance by the technical officer. However, when funding decreases in equipment and/or subcontracts are involved, the cognizant program office is required to identify the cost element(s) affected by the change in funding level.

(2) The grant officer will review the budget, and any changes made by the

technical officer, to identify any item which may be unallowable under the cost principles, or which appears unreasonable or unnecessary. The grant officer will complete Column C of the Budget Summary after discussing significant changes with the recipient and/or technical office. Requests for details from the recipient should be limited.

(3) The grant officer will address requests for direct charge of equipment in the negotiation summary, and state whether the purchase is approved as a direct cost.

(g) 42 U.S.C. 2459d prohibits NASA from funding any grant for longer than one year if the effect is to provide a guaranteed customer base for new commercial space hardware or services. The only exception would be if an Appropriations Act specifies the new commercial space hardware or services to be used.

(h) NASA reserves the right to either fully fund or incrementally fund grants based on fiscal law and program considerations. Grants with anticipated annual funding exceeding $50,000 may be funded for less than the amount stated in the proposal.

(1) The grant officer will determine the number of incremental funding actions that will be allowed.

(2) The special condition at § 1260.53, Incremental Funding, will be included in the grant.

(i) Proposals for efforts that involve printing, binding, and duplicating in excess of 25,000 pages are subject to the Government Printing and Binding Regulations, No. 26, February 1990, S. Pub. 101–9, U.S. Government Printing Office, Washington, DC 20402, published by the Congressional Joint Committee on Printing. The technical office will refer such proposals to the Installation Central Printing Management Officer (ICPMO). The grant officer will be advised in writing of the results of the ICPMO review.

(j) The provision at § 1260.30, Rights in Data, is to be inserted as a standard provision into grants and cooperative agreements that don't require cost sharing. Additional language is required for cost sharing and/or matching efforts, and in cooperative agreements, as set forth in the provision.

(k) By acceptance of a grant (containing the provision at § 1260.34) the recipient agrees that it is in compliance with the Clean Air and Federal Water Pollution Control Acts. The Administrator may approve exemptions from this prohibition under certain circumstances under Executive Order 11738. Requests for exemptions or renewals thereof shall be made to the Office of Procurement, NASA Headquarters, Program Operations Division (Code HS), Washington, DC 20546.

(l) Requests for acquisition of property may be made by a recipient either as part of the original budget proposal or subsequent to award. Comprehensive guidance on evaluating requests for acquisition of property, vesting of title, and administration issues, is set forth at § 1260.74.

§ 1260.12 Choice of award instrument.

(a) This section and § 1260.111 provide guidance on the appropriate choice of award instruments consistent with 31 U.S.C. 6301 to 6308. Throughout § 1260.12, the term ''grant'' does not include ''cooperative agreements.''

(b)(1) A procurement contract is a mutually binding legal relationship obligating the seller to furnish supplies or services (including construction), and the buyer pays for them.

(2) The principal purpose of a procurement contract is to acquire, for NASA's direct use or benefit, a well-defined, specific effort clearly required for the accomplishment of a scheduled NASA mission or project.

(3) If it is determined that a procurement contract is the appropriate type of funding instrument to meet NASA's purposes, the procurement shall be conducted under the FAR and the NFS (48 CFR Chapter 18).

(4) If an action is to be awarded for a dollar amount below the simplified acquisition threshold, the action may be completed by a contracting officer as a purchase order. The purchase order must be properly modified to include necessary language pertaining to data rights, key personnel requirements, and any other necessary requirements as determined by the contracting officer.

(c) A grant shall be used as the legal instrument to reflect a relationship between NASA and a recipient whenever the principal purpose is the transfer of anything of value to the recipient to accomplish a public purpose of support or stimulation authorized by Federal statute. Grants are distinguished from cooperative agreements in that substantial involvement is not expected between NASA and the recipient when carrying out the activity. Grants are distinguished from contracts in that grants provide financial assistance to the recipient to conduct a fairly autonomous program; contracts entail acquisition. Various types of NASA grants contain different provisions and conditions as described in §§ 1260.20 and 1260.50. The major types of grants and cooperative agreements are defined as follows. Grants and cooperative agreements to carry out other authorized purposes should be used to the extent appropriate, and must be in compliance with OMB Circular A–110.

(1) *Research grant.* A research grant shall be used to accomplish a NASA objective through stimulating or supporting the acquisition of knowledge or understanding of the subject or phenomena under study, or attempting to determine and exploit the potential of scientific discoveries or improvements in technology, materials, processes, methods, devices, or techniques and advance the state of the art. The recipient will bear prime responsibility for the conduct of research, and exercises judgment and original thought toward attaining the scientific goals within broad parameters of the research areas proposed and the resources provided;

(2) *Education grant.* Students and faculty receiving direct support under a NASA education grant must be U.S. citizens. An education grant is an agreement that provides funds to an educational institution or other nonprofit organizations within one or more of the following areas:

(i) Capturing student interest and/or improving student performance in science, mathematics, technology, or related fields;

(ii) Enhancing the skill, knowledge, or ability of teachers or faculty members in science, mathematics, or technology;

(iii) Supporting national educational reform movements;

(iv) Conducting pilot programs or research to increase participation and/or to enhance performance in science, mathematics, or technology education at all levels; and

(v) Developing instructional materials (*e.g.*, teacher guides, printed publications, computer software, and videotapes) or networked information services for education;

(3) *Training grant.* A training grant is an agreement that provides funds primarily for scholarships, fellowships, or stipends to students, teachers, and/or faculty.

(i) NASA training grants are awarded to colleges, universities, or other non-profit organizations; not to individual students, teachers, or faculty members. It is the responsibility of the institution receiving the grant to approve the faculty, teachers, and/or students who will participate in the specific program, in cooperation with NASA. If a student, teacher, or faculty member ceases to participate in the program for any reason, the institution, with prior NASA approval, may appoint another student,

teacher, or faculty member to complete the remaining portion of the grant period. Replacement students, teachers, and/or faculty electing to apply for the following program year are not automatically entitled to an award and are subject to the evaluation/selection procedures administered to new applicants. Any participant receiving support under a NASA training grant may not concurrently hold another Federal fellowship or traineeship.

(ii) No applicant shall be denied consideration or appointment on the grounds of race, creed, color, national origin, age, sex, or disability.

(iii) Students and faculty receiving direct support under a NASA training grant must be U.S. citizens, except for those supported by the NASA Earth System Science Fellowship Program, the Graduate Student Fellowship in Global Change Research Program, and the GLOBE Program.

(iv) Duration of the award is program specific. Refer to program policies and procedures for details. Renewal is contingent upon a successful performance evaluation as prescribed by the program, concurrence by the NASA technical officer, and the availability of funds.

(v) No substantial involvement is expected between NASA and the recipient. A student or faculty member receiving support under a NASA training grant does not incur any formal obligation to the Government.

(vi) The use of training grant funds to acquire equipment, or to acquire or construct facilities will not be permitted. Government furnished equipment will not be provided.

(vii) An Administrative Report must be submitted under the guidelines described by the specific program policies and procedures.

(4) *Facilities grant.* A facilities grant is used to provide for the acquisition, construction, use, maintenance, and disposition of facilities. Facilities, as used in this section, means property used for production, maintenance, research, development, or testing. Prior approval by the Associate Administrator of Procurement is required before proceeding with a facilities grant. To obtain prior approval, a package will be forwarded to the Director, Program Operations Division (HS), during the planning phase of the grant, that includes pertinent background information, details on Congressional Authorization, dollar value, and name of the recipient. Other information, such as a copy of the proposed facility grant award document, is not required. It is unlikely an award will be approved unless specifically authorized by Congress. A review by legal counsel to assure legal sufficiency is also required.

(d) Cooperative agreement. A cooperative agreement shall be used as the legal instrument reflecting a relationship between NASA and a recipient whenever the principal purpose is the transfer of anything of value to the recipient to accomplish a public purpose of support or stimulation authorized by Federal statute, and substantial involvement is anticipated between NASA and the recipient during performance of the contemplated activity (31 U.S.C. 6305). Characteristics inherent in a cooperative agreement include those that apply to a grant, plus the following:

(1) Substantial NASA involvement in and contribution to the technical aspects of the effort are necessary for its accomplishment. This could involve an active NASA role in collaborative relations, access to a NASA site or equipment, or sharing NASA facilities and personnel. For example, a university investigator could work for a substantial amount of time at a NASA Center, a NASA investigator could work at a university, or when the collaboration is such that a jointly authored report or education curriculum product is appropriate;

(2) The project, conducted as proposed, would not be possible without extensive NASA-recipient technical collaboration;

(3) The nature of the collaboration shall be clearly defined and specified in the special condition at § 1260.51.

(e)(1) Grants and cooperative agreements with foreign organizations. Grants and cooperative agreements with foreign organizations provide for research to be performed in whole, or in part, by a foreign organization, with funding being provided by NASA to the foreign organization as reimbursement for the work performed.

(2) It is NASA policy that, in general, research with foreign organizations will not be conducted through grants or cooperative agreements, but instead will be accomplished on a no-exchange-of-funds basis. In these cases, NASA enters into agreements undertaking projects of international scientific collaboration. NASA policy on performing research with foreign organizations on a no-exchange-of-funds basis is set forth at NFS 1835.016–70. In rare instances, NASA may enter into an international agreement under which funds will be transferred to a foreign recipient.

(3) Grants and cooperative agreements to foreign organizations are made on an exceptional basis only. Awards require the prior approval of the Headquarters Office of External Relations (Code I) and the Headquarters Office of the General Counsel (Code G). Requests to award foreign grants or cooperative agreements are to be coordinated through the Office of Procurement, Program Operations Division (Code HS). Requests for approval shall contain:

(i) The identity of the foreign entity, the country or countries involved, and the purpose of the grant or cooperative agreement.

(ii) The Space Act Agreement(s) or underlying international agreement involved, if any.

(iii) A description of the effort to be undertaken by the entity described in paragraph (e)(3)(i) of this section, including their dollar value.

(iv) The reason why the grant or cooperative agreement requires a placement with a foreign organization.

(v) The reason why the work can not be accomplished on a no exchange of funds basis.

(4) Grants and cooperative agreements to foreign organizations require a review by the Office of General Counsel.

(5) The requirements of this section do not apply to the purchase of supplies or services (excluding research) from non-U.S. sources by U.S. grant or cooperative agreement recipients, when necessary to support research efforts.

(f)(1) The decision whether to use a contract, grant or cooperative agreement as an award instrument must be based on the principal purpose of the relationship. When NASA, within its authority, enters into a transaction where the principal purpose is to accomplish a public purpose of support or stimulation authorized by Federal statute, a grant or a cooperative agreement is the appropriate instrument. Conversely, if the principal purpose of a transaction is to accomplish a NASA requirement, *i.e.,* to produce something for NASA's own use, a procurement contract is the appropriate instrument. Two essential questions must be asked to ensure that a grant or cooperative agreement is the appropriate instrument. The first question is: Will NASA be directly harmed in furthering a specific NASA mission requirement if the effort is not accomplished? The answer to this question must be ''no.'' The second question is: Is the work being performed by the recipient primarily for its own purposes, which NASA is merely supporting with financial or other assistance? The answer to this question must be ''yes.'' If these criteria are met, then the effort is not a NASA requirement, and can then be considered as to whether it supports or stimulates a public purpose.

(2) In applying the principal purpose test, it must be determined whether the Government is the direct beneficiary or user of the activity. If NASA provides the specifications for the project; or is having the project completed based on its own identified needs; or will directly use the report or result of the project for a scheduled NASA mission, then, in most cases, the principal purpose is to acquire property or services for the direct benefit or use of NASA, and thus, a contractual relationship exists. However, there may be cases where NASA expects to derive some incidental use or benefit from funded activities. In fact, any extramural expenditure that furthers the Agency's goals or mission can be said to be of benefit or use to the Government. But not every expenditure produces for the Government a benefit or use that is direct; *i.e.,* immediate, uninterrupted, or specific. Where an expenditure will produce a benefit or use that is only indirect in nature, a grant or cooperative agreement may be used.

(3) The status of the entity involved is not a primary factor in determining the appropriate award instrument. For example, an entity that operates on a non-profit basis may receive funding through a contract, and is not limited to receiving grants or cooperative agreements. Similarly, a profit-making firm may receive funding through grants, cooperative agreements, or contracts.

(4) NASA offices may be mandated through their missions to support specific scientific, educational, or training programs. The office may be accountable to NASA management, the Administration, or Congress for oversight and proper implementation of the program, may require direct oversight, may be directly accountable for the results of the program and that the work be successfully completed. Whenever the office requesting the grant or cooperative agreement would be directly harmed in performing its mission if an award was not made, a grant or cooperative agreement is not appropriate. Specific examples of situations requiring special scrutiny include—

(i) Education grants that for the administration of a program for which the education office is directly responsible;

(ii) Research or education grants to establish and support university laboratories on a non-competitive basis, with the resulting work of direct benefit to NASA; or

(iii) Training grants that hire university students, on a non-competitive basis, to perform work at a NASA Center in direct support of NASA personnel, and perform work which is required in support of a NASA mission.

(5) A grant may be used to provide funding to an association to hold a conference (among its members and NASA officials) where the benefits flow primarily to the association and its members, not to NASA. The principal purpose will be to advance research or other purposes of the association. Thus, NASA may not direct an association in arranging the conference or in providing other services for NASA's benefit. The conference should be run by the association, not by NASA. Conferences sponsored or initiated by NASA primarily to meet a specific NASA need or obtain information for the direct benefit of NASA must be supported by means of a contract.

§ 1260.13 Award procedures.

(a) Award instruments are classified as follows:

(1) Annual grants are grants awarded for a short term (*e.g.,* on an annual basis).

(2) Multiple year grants support research projects that may span several years. NASA policy is to make maximum use of multiple year grants. A Multiple Year Grant is generally selected for a period of three years in keeping with NASA's policy calling for research to be peer reviewed at least every three years. Grants with periods of performance in excess of three years may be appropriate when the NASA technical office determines at the inception of the grant that a period of performance in excess of three years is necessary to complete a discrete research effort.

(i) If the decision to provide multiple year funding to a research proposal is made, the special condition at § 1260.52, Multiple Year Grant or Cooperative Agreement, will be included in the award.

(ii) Periods approved under the Multiple Year Grant or Cooperative Agreement special condition at § 1260.52, and funded at the levels specified in the special condition, are not considered to be new awards. Therefore, new proposals, new proposal-related certifications (such as Disclosure of Lobbying Activities, and Debarment and Suspension), new technical evaluations, and new budget proposals are not required, as long as this information for the multiple year period was reviewed and approved as part of the original proposal.

(iii) If NASA program constraints or developments within the research project dictate a reduction in the funding level specified under a Multiple Year Grant period, research may continue at the reduced level under the terms of the provisions; however, the recipient may rebudget under the grant provisions to keep the project within the funding actually provided.

(3) An augmentation to a grant may be issued as a supplement at any time when work is introduced which is outside the scope of the approved proposal or when there is a need for substantial unanticipated funding. The grant officer must first determine whether the augmentation requires a separate approval as a non-competitive addition to the work to be performed under the grant. Augmentations require the submission of revised budget proposals and technical evaluations covering the additional work. Since augmentations will be performed within the existing period of performance, certifications will not normally be required.

(4) A grant extension may be placed to extend the grant beyond the expiration date, in accordance with the provision at § 1260.23, Extensions, if additional time beyond the established period of performance is required to assure adequate completion of the original scope of work within the available funding.

(5) Grant renewals provide for continuation of research beyond the original scope, period of performance and funding levels; therefore, new proposals, certifications and technical evaluations are required prior to the execution of a grant renewal. Grant renewals will be awarded as new grants. Continued performance within a period specified under the Multiple Year Grant provision does not constitute a renewal. For research originally awarded through a competitive NRA, CAN, or other competitive announcement that has completed its period of performance, peer review of a proposal to continue the research should be accomplished prior to selecting the research grant for renewal. If the effort was originally awarded through an unsolicited proposal, a new justification to accept the unsolicited proposal would be required (however, also see § 1260.12(f)(1)). Multiple year grant special conditions may be incorporated into renewals.

(b) While NASA normally provides full funding support for research grants, alternate methods of grant funding are as follows:

(1) Since NASA grant recipients usually gain no measurable commercial or economic benefit from grants, other than conducting research, cost sharing for research grants is not generally required. NASA may, however, accept

cost sharing when voluntarily offered. Additionally, in instances when the grant officer determines that the recipient will benefit from the research results through sales to non-Federal entities, cost sharing based upon this mutuality of interest will apply. See § 1260.123. When cost sharing is used, the grant officer shall insert a Special Condition substantially as shown in § 1260.54, Cost Sharing. (See 14 CFR part 1274 for grants and cooperative agreements with commercial organizations involving cost sharing.)

(2) NASA may provide partial support for a research project or conference where additional funding is being provided by other Federal agencies. If the grant also involves cost sharing by the recipient, the grant officer will ensure that the recipient's share does not include any Federal funds.

§ 1260.14 Limitations.

(a) NASA does not award grants merely to provide donative assistance no matter how worthy the purpose, but to the extent that appropriations are available to carry out authorized Agency programs. Research in any academic discipline related to NASA interests normally will qualify. However, advice of legal counsel should be sought in unusual situations, or when unusual project activities or organizational attributes are evident.

(b) It is NASA's policy that non-monetary (zero dollar) grants or cooperative agreements shall not be used, except for no-cost extensions.

(c) Loans of Government personal property not associated with a contract, grant, or cooperative agreement under 31 U.S.C. 6301 to 6308, and made under the Space Act of 1958, should be consummated as loan agreements. Also, excess Government research property may be donated to educational institutions and nonprofit organizations pursuant to 15 U.S.C. 3710(I). See § 1260.133(a)(2).

(d) Neither grants nor cooperative agreements shall be used as legal instruments for consulting service arrangements.

§ 1260.15 Format and numbering.

(a) A grant shall be brief, containing only those provisions and special conditions necessary to protect the interests of the Government.

(b) Cover page formats shown in Exhibit B to subpart A of this Part 1260 shall be used for all NASA grant and cooperative agreement award documents. Provisions for grants with U.S. organizations shall be incorporated by reference, and preprinted checklists may be used (Exhibit C to subpart A of this part 1260). Both special conditions and provisions for grants with foreign organizations will be printed in full text. An acceptance block may be added when the grant officer finds it necessary to require bilateral execution of the grant. Program budgets are not generally attached to the award document. When it is necessary to attach the budget due to revisions to the original proposed budget or other reasons, this information should be suitably marked as confidential, and is not be disclosed outside of the Government without the consent of the grantee.

(c) The Identification Numbering System to be used prior to Integrated Financial Management Project (IFMP) implementation will be applied as follows:

(1) For research, education, and facilities grants, numbering shall conform to (NFS) 48 CFR 1804.7102(a) by including the Center Identification Number, except that a NAG prefix will be used in lieu of the NAS prefix (*e.g.,* NAG5 would be the Goddard prefix designation). They will be sequentially numbered.

(2) Cooperative agreements will use the prefix NCC plus the Center Identification Number. They will be sequentially numbered.

(3) Training grants will use the prefix NGT plus the Center Identification Number. They will be sequentially numbered.

(4) The Catalog of Federal Domestic Assistance (CFDA) Numbers does not apply to NASA grants.

(d) The Identification Numbering System will be revised after IFMP implementation. There will be a phase-in term for Center implementation of the IFMP. For centers using IFMP Performance Purchasing; the following numbering system shall be used for new awards (awards made prior to conversation to IFMP will retain previously assigned numbers):

(1) Document Type for grants. For research, education, facilities, and training grants, the document type prefix GR shall be used.

(2) Document Type for cooperative agreements. Cooperative agreements will use the prefix CO.

(3) Agency Identifier. The Agency identifier NAS shall follow the document number.

(4) Center Smart Codes. The Center identifier shall follow the document type:

Installation	Smart code
Ames Research Center	A
Dryden Flight Research Center	D
Glenn Research Center	C
Goddard Space Flight Center	G
Headquarters	H
Johnson Space Center	J
Kennedy Space Center	K
Langley Research Center	L
Marshall Space Flight Center	M
NASA Management Office—JPL	P
Stennis Space Center	S

(5) Fiscal Year. The fiscal year shall be represented as two digits.

(6) Procurement Code. ''G'' will be used as the procurement code to identify grants. Cooperative Agreements will be identified using ''A'' as the procurement code.

(7) Serial Numbers. Installations shall number grants and cooperative agreements serially by fiscal year. The serial number shall be six digits commencing with ''000001'' and continuing in succession.

(8) As an example of the above set forth methodology, the first two grants awarded by Marshall Space Flight Center in fiscal year 1999 would be GRNASM99G000001 and GRNASM99G000002.

(9) The Catalog of Federal Domestic Assistance (CFDA) Numbers does not apply to NASA grants.

§ 1260.16 Distribution.

(a) Copies of grants and supplements will be provided to—

(1) Payment offices (original copy);

(2) Technical officers;

(3) Administrative grant officers when delegated;

(4) The NASA Center for AeroSpace Information (CASI), Attn: Document Processing Section, 7121 Standard Drive, Hanover, MD 21076; and

(5) Other appropriate offices as determined by the grant officer.

(b) In addition to receipt of grants and supplements, the administrative grant officer will receive a copy of the approved budget.

(c) The file will record the addresses for distribution.

Provisions

§ 1260.20 Provisions.

(a) Research grants, education grants, and cooperative agreements with U.S. educational institutions and nonprofit organizations shall incorporate by reference the provisions set forth in §§ 1260.21 through 1260.38. Training grants shall incorporate by reference the provisions set forth in §§ 1260.21 through 1260.38, except that the grant officer will substitute § 1260.22, Technical Publications and Reports,

with reporting requirements as specified by the program office.

(b) Facilities grants provisions will be selected on a case-by-case basis (see § 1260.50).

(c) Research grants awarded to foreign organizations, when approved by Headquarters, will include the following provisions at a minimum: §§ 1260.21, 1260.22, 1260.23, 1260.24, 1260.25, 1260.26, 1260.27, 1260.29, 1260.33, 1260.35, 1260.36 and 1260.37. Additional special conditions will be selected on a case by case basis (see § 1260.50). All provisions will be provided in full text. Referenced handbooks, statutes, or other regulations, which the recipient may not have access to, must be made available when requested by the foreign organization.

(d) The provisions set forth at §§ 1260.21 through 1260.38 do not apply to awards made under the Federal Demonstration Partnership (FDP). FDP awards are subject to the FDP Phase III General Terms and Conditions and the NASA Agency Specific Requirements Modifications to the General Terms and Conditions (Exhibit D to subpart A of this part 1260). Since these documents are provided directly to the FDP institutions, they are not to be attached to FDP grants. However, the grant officer will include a statement similar to the following on FDP grants: ''The Federal Demonstration Partnership General Terms and Conditions and NASA Agency-specific Requirements apply to this award.''

(e) Grants or cooperative agreements awarded by NASA to the Commercial Space Centers under the Space Development and Commercial Research (SDCR) Program require special conditions in addition to those set forth at §§ 1260.21 through 1260.38. SDCR Special Conditions are required to be included in full text for all SDCR Grants and Cooperative Agreements (Exhibit E to subpart A of this part 1260). Changes or additions to these Special Conditions must be approved by the Office of Space Utilization and Product Development (Code UM) prior to the award of the grant. Requests for changes or additions are to be coordinated through the Office of Procurement, Program Operations Division (Code HS).

(f) Grants and cooperative agreements awarded by NASA to commercial organizations where cost sharing is not required shall incorporate the provisions set forth at §§ 1260.21 through 1260.38, modified as set forth under 1260.4(b).

(g) Grants and cooperative agreements not specifically classified elsewhere in this section, but that are awarded for other authorized purposes, shall include provisions selected on a case-by-case basis.

(h) Whenever the word ''grant'' appears in §§ 1260.21 through 1260.38, it shall be deemed to include, as appropriate, the term ''cooperative agreement.''

§ 1260.21 Compliance With OMB Circular A–110.

Compliance With OMB Circular A–110

October 2000

This grant or cooperative agreement is subject to the requirements set forth in OMB Circular A–110, Uniform Administrative Requirements for Grants and Agreements with Institutions of Higher Education, Hospitals, and Other Non-Profit Organizations. Recipients are required to comply with the requirements of A–110, as adopted by NASA as subpart B of Part 1260 of Title 14 of the Code of Federal Regulations. Specific provisions set forth in this award document are provided to supplement and clarify, not replace, the Circular, except in circumstances where a waiver from Circular requirements has been obtained by NASA.

[End of provision]

§ 1260.22 Technical publications and reports.

(This provision describes standard reporting requirements that should be applied in most circumstances. The requirements set forth under this provision may be modified by the grant officer based on specific report needs for the grant or cooperative agreement, provided that reporting requirements do not conflict with § 1260.151. Any special reporting requirements will be set forth as a special condition in the award document.)

Technical Publications and Reports

October 2000

(a) NASA encourages the widest practicable dissemination of research results at any time during the course of the investigation.

(1) All information disseminated as a result of the grant shall contain a statement which acknowledges NASA's support and identifies the grant by number (*e.g.,* ''The material is based upon work supported by NASA under award No(s) GRNASM99G000001, etc.'').

(2) Except for articles or papers published in scientific, technical, or professional journals, the exposition of results from NASA supported research should also include the following disclaimer: ''Any opinions, findings, and conclusions or recommendations expressed in this material are those of the author(s) and do not necessarily reflect the views of the National Aeronautics and Space Administration.''

(b) Reports shall be in the English language, informal in nature, and ordinarily not exceed three pages (not counting bibliographies, abstracts, and lists of other media). The recipient shall submit the following reports:

(1) A Progress Report for all but the final year of the grant. Each report is due 60 days before the anniversary date of the grant and shall briefly describe what was accomplished during the reporting period as outlined in § 1260.151(d). A special condition specifying more frequent reporting may be required.

(2) A Summary of Research (or Educational Activity Report in the case of Education Grants) is due within 90 days after the expiration date of the grant, regardless of whether or not support is continued under another grant. This report shall be a comprehensive summary of significant accomplishments during the duration of the grant.

(c) Progress Reports, Summaries of Research, and Educational Activity Reports shall include the following on the first page:

(1) Title of the grant.

(2) Type of report.

(3) Name of the principal investigator.

(4) Period covered by the report.

(5) Name and address of the recipient's institution.

(6) Grant number.

(d) Progress Reports, Summaries of Research, and Educational Activity Reports shall be distributed as follows:

(1) The original report, in both hard copy and electronic format, to the Technical Officer.

(2) One copy to the NASA Grant Officer, with a notice to the Administrative Grant Officer, (when administration of the grant has been delegated to ONR), that a report was sent.

(e) For Summaries of Research and published reports, one micro-reproducible copy shall also be sent to the NASA Center for AeroSpace Information (CASI), Attn: Document Processing Section, 7121 Standard Drive, Hanover, MD 21076.

[End of provision]

§ 1260.23 Extensions.

Extensions

October 2000

(a) It is NASA policy to provide maximum possible continuity in funding grant-supported research and educational activities, therefore, grants may be extended for additional periods of time when necessary to complete work that was part of the original award. NASA generally only approves such extensions within funds already made available. Any extension that would require additional funding must be supported by a proposal submitted at least three months in advance of the expiration date of the grant.

(b) In accordance with § 1260.125(e)(2), Recipients may extend the expiration date of a grant if additional time beyond the established expiration date is required to assure adequate completion of the original scope of work within the funds already made available. For this purpose, the recipient may make a one-time no-cost extension, not to exceed 12 months, prior to the established expiration date. Written notification of such an extension, with the supporting reasons, must be received by the NASA Grant Officer at least ten days prior to the expiration of the award. A copy of the extension must also be forwarded to cognizant Office of Naval Research office. NASA reserves the right to

disapprove the extension if the requirements set forth at § 1260.125(e)(2) are not met.

(c) Requests for approval for all other no-cost extensions must be submitted in writing to the NASA Grant Officer. Copies are to be forwarded to the cognizant Office of Naval Research office.

[End of provision]

§ 1260.24 Termination and enforcement.

Termination and Enforcement

October 2000

Termination and enforcement conditions of this award are specified in §§ 1260.160 through 1260.162.

[End of provision]

§ 1260.25 Change in principal investigator or scope.

Change in Principal Investigator or Scope

October 2000

The following guidance is provided as an amplification to prior approval requirements set forth at § 1260.125(c):

(a) The Recipient shall obtain the approval of the NASA Grant Officer for a change of the Principal Investigator, or for a significant absence of the Principal Investigator from the project, defined as a three month absence from the program or a 25 percent reduction in time devoted to the project. Significantly reduced availability of the services of the Principal Investigator(s) named in the grant instrument could be grounds for termination, unless alternative arrangements are made and approved in writing by the Grant Officer.

(b) Prior written approval is required from NASA if there is to be a significant change in the objective or scope.

[End of provision]

§ 1260.26 Financial management.

Financial Management

October 2000

(a) Advance payments by electronic funds transfer will be made by the Financial Management Office of the NASA Center which issued the grant in accordance with procedures provided to the recipient. The Recipient shall submit Federal Cash Transaction Reports (SF 272) to the aforementioned office and to the Administrative Grant Officer (if NASA has delegated administration) within 15 working days following the end of each Federal fiscal quarter, containing current estimates of the cash requirements for each of the four months following the quarter being reported. There will be a phase-in term for NASA adoption of an automated 272 system not requiring the forecast estimates. It is anticipated that this forecast requirement will be deleted no later than October 1, 2001. The final SF 272 is due within 90 days after the expiration date of the grant. The final SF 272 shall be submitted to the Financial Management Office, with copies sent to the NASA Grant Officer, and to the Administrative Grant Officer when the Office of Naval Research (ONR) has been delegated grant closeout responsibilities.

(b) Unless otherwise directed by the Grant Officer, any unexpended balance of funds which remains at the end of any funding period, except the final funding period of the grant, shall be carried over to the next funding period, and may be used to defray costs of any funding period of the grant. This includes allowing the carry over of funds to the second and subsequent years of a multiple year grant. This provision also applies to subcontractors performing substantive work under the grant. For grant renewals, the estimated amount of unexpended funds shall be identified in the grant budget section of the recipient's renewal proposal. NASA reserves the right to remove unexpended balances from grants when insufficient efforts have been made by the grantee to liquidate funding balances in a timely fashion.

[End of provision]

§ 1260.27 Equipment and other property.

Equipment and Other Property

October 2000

(a) NASA permits acquisition of special purpose and general purpose equipment specifically required for use exclusively for research activities.

(1) Acquisition of special purpose or general purpose equipment costing in excess of $5,000 (unless a lower threshold has been established by the Recipient) and not included in the approved proposal budget, requires the prior approval of the NASA Grant Officer. Grant awards under the Federal Demonstration Partnership are exempt from this requirement. Requests to the NASA Grant Officer for the acquisition of equipment shall be supported by written documentation setting forth the description, purpose, and acquisition value of the equipment, and including a written certification that the equipment will be used exclusively for research, activities. (A change in the model number of a prior approved piece of equipment does not require resubmission for that item.)

(2) Special purpose and general purpose equipment costing in excess of $5,000 (unless a lower threshold has been established by the Recipient) acquired by the recipient under a grant or cooperative agreement for the purpose of research shall be titled to the Recipient as ''exempt'' without further obligation to NASA, including reporting of the equipment, in accordance with § 1260.133(b). Special purpose or general purpose equipment costing in excess of $5,000 (unless a lower threshold has been established by the Recipient) acquired by the Recipient under a grant or cooperative agreement for non-research work shall be titled to the Recipient in accordance with § 1260.134.

(3) Special purpose or general purpose equipment acquired by the Recipient with grant funds, valued under $5,000 (unless a lower threshold is established by the Recipient) are classified as ''supplies,'' do not require the prior approval of the NASA Grant Officer, shall vest in the Recipient and will be titled to the Recipient in accordance with § 1260.135.

(4) Grant funds may be expended for the acquisition of land or interests therein or for the acquisition and construction of facilities *only* under a facilities grant, as defined in § 1260.12(c)(4).

(b) The Recipient shall submit an annual Inventory Report, to be received no later than October 31 of each year, which lists all reportable (non-exempt equipment and/or Federally owned property) in its custody as of September 30. Negative responses for annual Inventory Reports (when there is no reportable equipment) are not required. A Final Inventory Report of Federally Owned Property, including equipment where title was taken by the Government, will be submitted by the Recipient no later than 60 days after the expiration date of the grant. Negative responses for Final Inventory Reports are required.

(1) All reports will include the information listed in paragraph (f)(1) of § 1260.134, Equipment. No specific report form or format is required, provided that all necessary information set forth at § 1260.134(f)(1) is provided.

(2) The original of each report shall be submitted to the Deputy Chief Financial Officer (Finance). Copies shall be furnished to the Center Industrial Property Officer and to ONR.

[End of provision]

§ 1260.28 Patent rights.

Patent Rights

October 2000

As stated at § 1260.136, this award is subject to the provisions of 37 CFR 401.3(a) which requires use of the standard clause set out at 37 CFR 401.14 ''Patent Rights (Small Business Firms and Nonprofit Organizations)'' and the following:

(a) Where the term ''contract'' or ''Contractor'' is used in the ''Patent Rights'' clause, the term shall be replaced by the term ''grant'' or ''Recipient,'' respectively.

(b) In each instance where the term ''Federal Agency,'' ''agency,'' or ''funding Federal agency'' is used in the ''Patent Rights'' clause, the term shall be replaced by the term ''NASA.''

(c) The following item is added to the end of paragraph (f) of the ''Patent Rights'' clause: ''(5) The Recipient shall include a list of any Subject Inventions required to be disclosed during the preceding year in the performance report, technical report, or renewal proposal. A complete list (or a negative statement) for the entire award period shall be included in the summary of research.''

(d) The term ''subcontract'' in paragraph (g) of the ''Patent Rights'' clause shall include purchase orders.

(e) The NASA implementing regulation for paragraph (g)(2) of the ''Patent Rights'' clause is at 48 CFR 1827.304–4(a)(i)(B).

(f) The following requirement constitutes paragraph (l) of the ''Patent Rights'' clause:

''(l) Communications. A copy of all submissions or requests required by this clause, plus a copy of any reports, manuscripts, publications or similar material bearing on patent matters, shall be sent to the Center Patent Counsel and the NASA Grant Officer in addition to any other submission requirements in the grant provisions. If any reports contain information describing a ''subject invention'' for which the recipient

has elected or may elect to retain title, NASA will use reasonable efforts to delay public release by NASA or publication by NASA in a NASA technical series until an application filing date has been established, provided that the Recipient identify the information and the ''subject invention'' to which it relates at the time of submittal. If required by the NASA Grant Officer, the Recipient shall provide the filing date, serial number and title, a copy of the patent application, and a patent number and issue date for any ''subject invention'' in any country in which the Recipient has applied for patents.''

(g) *NASA Inventions.* NASA will use reasonable efforts to report inventions made by NASA employees as a consequence of, or which bear a direct relation to, the performance of specified NASA activities under this agreement and, upon timely request, will use reasonable efforts to grant the Recipient an exclusive, or partially exclusive, revocable, royalty-bearing license, subject to the retention of a royalty-free right of the Government to practice or have practiced the invention by or on behalf of the Government.

(h) In the event NASA contractors are tasked to perform work in support of specified activities under a cooperative agreement and inventions are made by Contractor employees, the Recipient will normally retain title to its employee inventions in accordance with 35 U.S.C. 202, 14 CFR Part 1245, and Executive Order 12591. In the event the Recipient decides not to pursue rights to title in any such invention and NASA obtains title to such inventions, NASA will use reasonable efforts to report such inventions and, upon timely request, will use reasonable efforts to grant the Recipient an exclusive, or partially exclusive, revocable, royalty-bearing license, subject to the retention of a royalty-free right of the Government to practice or have practiced the invention by or on behalf of the Government.

[End of provision]

§ 1260.29 Reserved.

§ 1260.30 Rights in data.

(The grant officer may revise the language under this provision to modify each party's rights based on the particular circumstances of the program and/or the recipient's need to protect specific proprietary information. Any modification to the standard language set forth under the provision requires the concurrence of the Center's Patent Counsel and that the provision be printed in full text.)

Rights in Data

October 2000

(a) *Fully Funded Efforts.*

(1) ''Data'' means recorded information, regardless of form, the media on which it may be recorded, or the method of recording. The term includes, but is not limited to, data of a scientific or technical nature, computer software and documentation thereof, and data comprising commercial and financial information.

(2) The Recipient grants to the Federal Government, a royalty-free, nonexclusive and irrevocable license to use, reproduce, distribute (including distribution by transmission) to the public, perform publicly, prepare derivative works, and display publicly, data in whole or in part and in any manner for Federal purposes and to have or permit others to do so for Federal purposes only.

(3) In order that the Federal Government may exercise its license rights in data, the Federal Government, upon request to the Recipient, shall have the right to review and/or obtain delivery of data resulting from the performance of work under this grant, and authorize others to receive data to use for Federal purposes.

(b) *Cost Sharing and/or Matching Efforts.* When the Recipient cost shares with the Government on the effort, the following paragraph applies:

''(1) In the event data first produced by Recipient in carrying out Recipient's responsibilities under an agreement is furnished to NASA, and Recipient considers such data to embody trade secrets or to comprise commercial or financial information which is privileged or confidential, and such data is so identified with a suitable notice or legend, the data will be maintained in confidence and disclosed and used by the Government and its Contractors (under suitable protective conditions) only for experimental, evaluation, research and development purposes, by or on behalf of the Government for an agreed to period of time, and thereafter for Federal purposes as defined in § 1260.30(a)(2).''

(c) For *Cooperative Agreements the following paragraph applies:*

''(1) As to data first produced by NASA in carrying out NASA's responsibilities under a cooperative agreement and which data would embody trade secrets or would comprise commercial or financial information that is privileged or confidential if it has been obtained from the Recipient, such data will be marked with an appropriate legend and maintained in confidence for 5 years (unless a shorter period has been agreed to between the Government and Recipient) after development of the information, with the express understanding that during the aforesaid period such data may be disclosed and used (under suitable protective conditions) by or on behalf of the Government for Government purposes only, and thereafter for any purpose whatsoever without restriction on disclosure and use. Recipient agrees not to disclose such data to any third party without NASA's written approval until the aforementioned restricted period expires.''

[End of provision]

§ 1260.31 National security.

National Security

October 2000

Normally, NASA grants do not involve classified information. However, if it is known in advance that a grant involves classified information or if the work on the grant is likely to develop classified information, individuals performing on the grant who will have access to the information must obtain the appropriate security clearance in advance of performing on the grant, in accordance with NASA Policy Guidance (NPG) 1620.1, Security Procedures and Guidelines. When access to classified information is not originally anticipated in the performance of a grant, but such information is subsequently sought or potentially developed by the grant Recipient, the NASA Grant Officer who issued the grant shall be notified immediately, and prior to work under the grant proceeding, to implement the appropriate clearance requirements.

[End of provision]

§ 1260.32 Nondiscrimination.

Nondiscrimination

October 2000

(a) To the extent provided by law and any applicable agency regulations, this award and any program assisted thereby are subject to the provisions of Title VI of the Civil Rights Act of 1964 (Pub. L. 88–352), Title IX of the Education amendments of 1972 (Pub. L. 92–318, 20 U.S.C. 1681 *et seq.*), section 504 of the Rehabilitation Act of 1973 (29 U.S.C. 794), the Age Discrimination Act of 1975 (Pub. L. 94–135), the implementing regulations issued pursuant thereto by NASA, and the assurance of compliance which the recipient has filed with NASA.

(b) The Recipient shall obtain from each organization that applies or serves as a subrecipient, Contractor or subcontractor under this award (for other than the provision of commercially available supplies, materials, equipment, or general support services) an assurance of compliance as required by NASA regulations.

(c) Work on NASA grants is subject to the provisions of Title VI of the Civil Rights Act of 1964 (Pub. L. 88–352; 42 U.S.C. 2000d-l), Title IX of the Education Amendments of 1972 (20 U.S.C. 1680 *et seq.*), Section 504 of the Rehabilitation Act of 1973, as amended (29 U.S.C. 794), the Age Discrimination Act of 1975 (42 U.S.C. 6101 *et seq.*), and the NASA implementing regulations (14 CFR parts 1250, 1251, and 1252).

[End of provision]

§ 1260.33 Subcontracts.

Subcontracts

October 2000

(a) Recipients shall notify NASA when a subcontract award will be made that falls within the thresholds established at § 1260.144(e). When pre-award review of a subcontract is requested by the NASA Grant Officer in accordance with § 1260.144(e), the following specific documents will be made available to the NASA Grant Officer. (The Grant Officer can request additional documents):

(1) A copy of the proposed subcontract.

(2) The basis for subcontractor selection.

(3) Justification for lack of competition when competitive bids or offers are not obtained.

(4) The subcontract budget and basis for subcontract cost or price.

(b) The Recipient (with the exception of foreign organizations) shall utilize small

business concerns, small disadvantaged business concerns, Historically Black Colleges and Universities, minority educational institutions, and women-owned small business concerns as subcontractors to the maximum extent practicable.
[End of provision]

§ 1260.34 Clean air and water.

Clean Air and Water

October 2000

(Applicable only if the award exceeds $100,000, or a facility to be used has been the subject of a conviction under the Clean Air Act (42 U.S.C. 1857c–8(c)(1) or the Federal Water Pollution Control Act (33 U.S.C. 1319(c)), and is listed by EPA, or if the award is not otherwise exempt). The Recipient agrees to the following:

(a) Comply with applicable standards, orders or regulations issued pursuant to the Clean Air Act, as amended (42 U.S.C. 7401 *et seq.*) and of the Federal Water Pollution Control Act (33 U.S.C. 1251 *et seq.*).

(b) Ensure that no portion of the work under this award will be performed in a facility listed on the Environmental Protection Agency (EPA) List of Violating Facilities on the date that this award was effective unless and until the EPA eliminates the name of such facility or facilities from such listings.

(c) Use its best efforts to comply with clean air standards and clean water standards at the facility in which the award is being performed.

(d) Insert the substance of the provisions of this clause into any nonexempt subaward or contract under the award.

(e) Report violations to NASA or to EPA.
[End of provision]

§ 1260.35 Investigative requirements.

Investigative Requirements

October 2000

(a) As requested by NASA, the Recipient of each grant, and any other individuals to perform on the grant, agree to provide sufficient personal/biographical information necessary to conduct an investigation of the individual's background. The purpose of the investigation is to allow access to a NASA Center, or to NASA information, for performance of this grant. The Recipient acknowledges that NASA reserves the right to perform security checks, and to deny or restrict access to a NASA Center, facility, computer system, or technical information as appropriate.

(b) All visit requests must be submitted in a timely manner in accordance with instructions provided by the Center(s) to be visited.
[End of provision]

§ 1260.36 Travel and transportation.

Travel and Transportation

October 2000

(a) The Fly American Act, 49 U.S.C. 1517, requires the Recipient to use U.S. flag air carriers for international air transportation of personnel and property to the extent that service by those carriers is available.

(b) Department of Transportation regulations, 49 CFR Part 173, govern Recipient shipment of hazardous materials and other items.
[End of provision]

§ 1260.37 Safety.

Safety

October 2000

(a) The Recipient shall act responsibly in matters of safety and shall take all reasonable safety measures in performing under this grant or cooperative agreement. The Recipient shall comply with all applicable federal, state, and local laws relating to safety. The Recipient shall maintain a record of, and will notify the NASA Grant Officer immediately (within one workday) of any accident involving death, disabling injury or substantial loss of property in performing this grant or cooperative agreement. The Recipient will immediately (within one workday) advise NASA of hazards that come to its attention as a result of the work performed.

(b) Where the work under this grant or cooperative agreement involves flight hardware, the hazardous aspects, if any, of such hardware will be identified, in writing, by the Recipient. Compliance with this provision by subcontractors shall be the responsibility of the Recipient.
[End of provision]

§ 1260.38 Drug-free workplace.

Drug-Free Workplace

October 2000

(a) Definitions. As used in this provision—

Controlled substance means a controlled substance in schedules I through V of section 202 of the Controlled Substances Act (21 U.S.C. 812) and as further defined in regulation at 21 CFR 1308.11 through 1308.15.

Conviction means a finding of guilt (including a plea of nolo contendere) or imposition of sentence, or both, by any judicial body charged with the responsibility to determine violations of the Federal or State criminal drug statutes.

Criminal drug statute means a Federal or non-Federal criminal statute involving the manufacture, distribution, dispensing, possession, or use of any controlled substance.

Drug-free workplace means the site(s) for the performance of work done by the Recipient in connection with a specific grant or cooperative agreement at which employees of the Recipient are prohibited from engaging in the unlawful manufacture, distribution, dispensing, possession, or use of a controlled substance.

Employee means an employee of a Recipient directly engaged in the performance of work under a Government grant or cooperative agreement. ''Directly engaged'' is defined to include all direct cost employees and any other Recipient employee who has other than a minimal impact or involvement in performance of the grant or cooperative agreement.

Individual means a Proposer/Recipient that has no more than one employee including the Proposer/Recipient.

(b) The Recipient, if other than an individual, shall—within 30 days after award (unless a longer period is agreed to in writing), or as soon as possible for grants and cooperative agreements of less than 30 days performance duration—

(1) Publish a statement notifying its employees that the unlawful manufacture, distribution, dispensing, possession, or use of a controlled substance is prohibited in the Recipient's workplace and specifying the actions that will be taken against employees for violations of such prohibition;

(2) Establish an ongoing drug-free awareness program to inform such employees about—

(i) The dangers of drug abuse in the workplace;

(ii) The Recipient's policy of maintaining a drug-free workplace;

(iii) Any available drug counseling, rehabilitation, and employee assistance programs; and

(iv) The penalties that may be imposed upon employees for drug abuse violations occurring in the workplace;

(3) Provide all employees engaged in performance of the grant or cooperative agreement with a copy of the statement required by paragraph (b)(1) of this provision;

(4) Notify such employees in writing in the statement required by paragraph (b)(1) of this provision that, as a condition of continued employment on the grant or cooperative agreement, the employee will—

(i) Abide by the terms of the statement; and

(ii) Notify the employer in writing of the employee's conviction under a criminal drug statute for a violation occurring in the workplace no later than 5 days after such conviction;

(5) Notify the Grant Officer in writing within 10 days after receiving notice under paragraph (b)(4)(ii) of this provision, from an employee or otherwise receiving actual notice of such conviction. The notice shall include the position title of the employee;

(6) Within 30 days after receiving notice under paragraph (b)(4)(ii) of this provision of a conviction, take one of the following actions with respect to any employee who is convicted of a drug abuse violation occurring in the workplace:

(i) Taking appropriate personnel action against such employee, up to and including termination; or

(ii) Require such employee to satisfactorily participate in a drug abuse assistance or rehabilitation program approved for such purposes by a Federal, State, or local health, law enforcement, or other appropriate agency; and

(7) Make a good faith effort to maintain a drug-free workplace through implementation of paragraphs (b)(1) through (b)(6) of this provision.

(c) The Recipient, if an individual, agrees by acceptance of the grant or cooperative agreement, not to engage in the unlawful manufacture, distribution, dispensing, possession, or use of a controlled substance during performance.

(d) In addition to other remedies available to the Government, the Recipient's failure to

comply with the requirements of paragraph (b) or (c) of this provision may render the Recipient subject to suspension of payments, termination of the grant or cooperative agreement, and suspension or debarment. [End of provision]

Special Conditions

§ 1260.50 Special conditions.

(a) In addition to the provisions set forth in 1260.21 through 1260.38, NASA grants and cooperative agreements are subject to special conditions, which either are not applicable to all awards or are temporary in nature. Examples are found in §§ 1260.51 through 1260.69, but NASA may impose other conditions as discussed in § 1260.114 or as the requirements dictate. Deviations are not required for changes made to special conditions.

(b) Special conditions will be printed in full text.

(c) In facilities grants, special conditions will be selected on a case-by-case basis. As appropriate, the requirements of the following sections will apply: § 1260.123(c), Cost Sharing or Matching; § 1260.125(h), Revision of Budget and Program Plans; and § 1260.132, Real Property.

(d) Research grants with foreign organizations will include special conditions at §§ 1260.59 through 1260.61, modified as necessary, when not covered under a Memorandum of Agreement (MOA). In addition, other special conditions (*e.g.,* §§ 1260.62 through 1260.65) will be written with the aid of legal counsel, and added when necessary.

(e) Grants and cooperative agreements awarded by NASA to commercial organizations where cost sharing is not required shall incorporate the special conditions prescribed at § 1260.4.

§ 1260.51 Cooperative agreement special condition.

Cooperative Agreement Special Condition

October 2000

(a) This award is a cooperative agreement as it is anticipated there will be substantial NASA involvement during performance of the effort. NASA and the Recipient mutually agree to the following statement of anticipated cooperative interactions which may occur during the performance of this effort:

(Reference the approved proposal that contains a detailed description of the work and insert a concise statement of the exact nature of the cooperative interactions that deals with existing facts and not contingencies.)

(b) The terms ''grant'' and ''Recipient'' mean ''cooperative agreement'' and ''Recipient of cooperative agreement,'' respectively, wherever the terms appear in provisions and special conditions included in this agreement.

(c) NASA's ability to participate and perform its collaborative effort under this cooperative agreement is subject to the availability of appropriated funds and nothing in this cooperative agreement commits the United States Congress to appropriate funds therefor.

§ 1260.52 Multiple year grant or cooperative agreement.

Multiple Year Grant or Cooperative Agreement

October 2000

This is a multiple year grant or cooperative agreement. Contingent on the availability of funds, scientific progress of the project, and continued relevance to NASA programs, NASA anticipates continuing support at approximately the following levels:

Second year $_____, Anticipated funding date_____.

Third year $_____, Anticipated funding date_____.

(Periods may be added or omitted, as applicable)

§ 1260.53 Incremental funding.

Incremental Funding

October 2000

(a) Only $_____ of the amount indicated on the face of this award is available for payment and allotted to this award. NASA contemplates making additional allotments of funds during performance of this effort. It is anticipated that these funds will be obligated as appropriated funds become available without any action required by the Recipient. The Recipient will be given written notification by the NASA Grant Officer.

(b) The recipient agrees to perform work up to the point at which the total amount paid or payable by the Government approximates but does not exceed the total amount actually allotted to this grant or cooperative agreement. NASA is not obligated to reimburse the Recipient for the expenditure of amounts in excess of the total funds allotted by NASA to this grant or cooperative agreement. The Recipient is not authorized to continue performance beyond the amount allotted to this award.

§ 1260.54 Cost sharing.

Cost Sharing

October 2000

(a) NASA and the Recipient will share in providing the resources necessary to perform the agreement. NASA funding and non-cash contributions (personnel, equipment, facilities, etc.) and the dollar value of the Recipient's cash and/or non-cash contribution will be on a_____ percent NASA; _____ percent Recipient basis.

(b) The funding and non-cash contributions by both parties is represented by the following dollar amounts:

Government Share _____

Recipient Share _____

Total Amount _____

(c) Criteria and procedures for the allowability and allocability of cash and non-cash contributions shall be governed by § 1260.123, Cost Sharing or Matching. The applicable Federal cost principles are cited in § 1260.127.

(d) The Recipient's share shall not be charged to the Government under this agreement or under any other contract, grant, or cooperative agreement.

§ 1260.55 Reports substitution.

Reports Substitution

October 2000

Technical Reports may be substituted for the required Performance Reports. The title page of such reports shall clearly indicate that the substitution has been made and will show the period covered by the originally required Performance Report.

§ 1260.56 Withholding.

Withholding

October 2000

If a Recipient fails to comply with the terms and conditions of this grant or cooperative agreement, including reporting requirements, NASA may withhold advance payments under this award, and may also withhold future awards to the Recipient, pending correction of the deficiency by the Recipient. If advance payments are withheld, the Grant Officer will notify the NASA Financial Management Office when payments may resume.

§ 1260.57 New technology.

New Technology

October 2000

(a) Definitions.

Administrator, as used in this special condition, means the Administrator of the National Aeronautics and Space Administration (NASA) or duly authorized representative.

Grant, as used in this special condition, means any actual or proposed grant, cooperative agreement, understanding, or other arrangement, and includes any assignment, substitution of parties, or subcontract executed or entered into thereunder.

Made, as used in this special condition, means conception or first actual reduction to practice; provided, that in the case of a variety of plant, the date of determination (as defined in section 41(d) of the Plant Variety Protection Act, 7 U.S.C. 2401(d)) must also occur during the period of grant performance.

Nonprofit organization, as used in this special condition, means a domestic university or other institution of higher education or an organization of the type described in section 501(c)(3) of the Internal Revenue Code of 1954 (26 U.S.C. 501(c)) and exempt from taxation under section 501(a) of the Internal Revenue Code (26 U.S.C. 501(a)), or any domestic nonprofit scientific or educational organization qualified under a State nonprofit organization statute.

Practical application, as used in this special condition, means to manufacture, in the case of a composition or product; to practice, in the case of a process or method; or to operate, in case of a machine or system; and, in each case, under such conditions as

to establish that the invention is being utilized and that its benefits are, to the extent permitted by law or Government regulations, available to the public on reasonable terms.

Reportable item, as used in this special condition, means any invention, discovery, improvement, or innovation of the grantee, whether or not patentable or otherwise protectable under Title 35 of the United States Code, made in the performance of any work under any NASA grant or in the performance of any work that is reimbursable under any provision in any NASA grant providing for reimbursement of costs incurred before the effective date of the grant. Reportable items include, but are not limited to, new processes, machines, manufactures, and compositions of matter, and improvements to, or new applications of, existing processes, machines, manufactures, and compositions of matter. Reportable items also include new computer programs, and improvements to, or new applications of, existing computer programs, whether or not copyrightable or otherwise protectable under Title 17 of the United States Code.

Small business firm, as used in this special condition, means a domestic small business concern as defined at 15 U.S.C. 632 and implementing regulations (see 13 CFR section 121.401 *et seq.*) of the Administrator of the Small Business Administration.

Subject invention, as used in this special condition, means any reportable item which is or may be patentable or otherwise protectible under Title 35 of the United States Code, or any novel variety of plant that is or may be protectable under the Plant Variety Protection Act (7 U.S.C. 2321 *et seq.*).

(b) Allocation of principal rights.

(1) Presumption of title.

(i) Any reportable item that the Administrator considers to be a subject invention shall be presumed to have been made in the manner specified in paragraph (1) or (2) of section 305(a) of the National Aeronautics and Space Act of 1958 (42 U.S.C. 2457(a)) (hereinafter called ''the Act''), and that presumption shall be conclusive unless at the time of reporting the reportable item the Recipient submits to the Grant Officer a written statement, containing supporting details, demonstrating that the reportable item was not made in the manner specified in paragraph (1) or (2) of section 305(a) of the Act.

(ii) Regardless of whether title to a given subject invention would otherwise be subject to an advance waiver or is the subject of a petition for waiver, the Recipient may nevertheless file the statement described in paragraph (b)(1)(i) of this special condition. The Administrator will review the information furnished by the Recipient in any such statement and any other available information relating to the circumstances surrounding the making of the subject invention and will notify the Recipient whether the Administrator has determined that the subject invention was made in the manner specified in paragraph (1) or (2) of section 305(a) of the Act.

(2) Property rights in subject inventions. Each subject invention for which the presumption of paragraph (b)(1)(i) of this special condition is conclusive or for which there has been a determination that it was made in the manner specified in paragraph (1) or (2) of section 305(a) of the Act shall be the exclusive property of the United States as represented by NASA unless the Administrator waives all or any part of the rights of the United States, as provided in paragraph (b)(3) of this special condition.

(3) Waiver of rights.

(i) Section 305(f) of the Act provides for the promulgation of regulations by which the Administrator may waive the rights of the United States with respect to any invention or class of inventions made or that may be made under conditions specified in paragraph (1) or (2) of section 305(a) of the Act. The promulgated NASA Patent Waiver Regulations, 14 CFR part 1245, subpart 1, have adopted the Presidential Memorandum on Government Patent Policy of February 18, 1983, as a guide in acting on petitions (requests) for such waiver of rights.

(ii) As provided in 14 CFR Part 1245, subpart 1, Recipients may petition, either prior to execution of the grant or within 30 days after execution of the grant, for advance waiver of rights to any or all of the inventions that may be made under a grant. If such a petition is not submitted, or if after submission it is denied, the Recipient (or an employee inventor of the Recipient) may petition for waiver of rights to an identified subject invention within eight months of first disclosure of the invention in accordance with paragraph (e)(2) of this special condition, or within such longer period as may be authorized in accordance with 14 CFR 1245.105.

(c) Minimum rights reserved by the Government.

(1) With respect to each subject invention for which a waiver of rights is applicable in accordance with 14 CFR part 1245, subpart 1, the Government reserves—

(i) An irrevocable, nonexclusive, nontransferable, royalty-free license for the practice of such invention throughout the world by or on behalf of the United States or any foreign government in accordance with any treaty or agreement with the United States; and

(ii) Such other rights as stated in 14 CFR 1245.107.

(2) Nothing contained in this paragraph (c) shall be considered to grant to the Government any rights with respect to any invention other than a subject invention.

(d) Minimum rights to the Recipient.

(1) The Recipient is hereby granted a revocable, nonexclusive, royalty-free license in each patent application filed in any country on a subject invention and any resulting patent in which the Government acquires title, unless the Recipient fails to disclose the subject invention within the times specified in paragraph (e)(2) of this special condition. The Recipient's license extends to its domestic subsidiaries and affiliates, if any, within the corporate structure of which the Recipient is a party and includes the right to grant sublicenses of the same scope to the extent the Recipient was legally obligated to do so at the time the grant was awarded. The license is transferable only with the approval of the Administrator except when transferred to the successor of that part of the Recipient's business to which the invention pertains.

(2) The Recipient's domestic license may be revoked or modified by the Administrator to the extent necessary to achieve expeditious practical application of the subject invention pursuant to an application for an exclusive license submitted in accordance with 37 CFR part 404, Licensing of Government Owned Inventions. This license will not be revoked in that field of use or the geographical areas in which the Recipient has achieved practical application and continues to make the benefits of the invention reasonably accessible to the public. The license in any foreign country may be revoked or modified at the discretion of the Administrator to the extent the Recipient, its licensees, or its domestic subsidiaries or affiliates have failed to achieve practical application in that foreign country.

(3) Before revocation or modification of the license, the Recipient will be provided a written notice of the Administrator's intention to revoke or modify the license, and the Recipient will be allowed 30 days (or such other time as may be authorized by the Administrator for good cause shown by the Recipient) after the notice to show cause why the license should not be revoked or modified. The Recipient has the right to appeal to the Administrator any decision concerning the revocation or modification of its license.

(e) Invention identification, disclosures, and reports.

(1) The Recipient shall establish and maintain active and effective procedures to assure that reportable items are promptly identified and disclosed to Recipient personnel responsible for the administration of this New Technology special condition within six months of conception and/or first actual reduction to practice, whichever occurs first in the performance of work under this grant. These procedures shall include the maintenance of laboratory notebooks or equivalent records and other records as are reasonably necessary to document the conception and/or the first actual reduction to practice of the reportable items, and records that show that the procedures for identifying and disclosing reportable items are followed. Upon request, the Recipient shall furnish the Grant Officer a description of such procedures for evaluation and for determination as to their effectiveness.

(2) The Recipient will disclose each reportable item to the Grant Officer within two months after the inventor discloses it in writing to Recipient personnel responsible for the administration of this New Technology special condition or, if earlier, within six months after the Recipient becomes aware that a reportable item has been made, but in any event for subject inventions before any on sale, public use, or publication of such invention known to the Recipient. The disclosure to the agency shall be in the form of a written report and shall identify the grant under which the reportable item was made and the inventor(s) or innovator(s). It shall be sufficiently complete in technical detail to convey a clear understanding, to the extent known at the time of the disclosure, of the nature, purpose,

operation, and physical, chemical, biological, or electrical characteristics of the reportable item. The disclosure shall also identify any publication, on sale, or public use of any subject invention and whether a manuscript describing such invention has been submitted for publication and, if so, whether it has been accepted for publication at the time of disclosure. In addition, after disclosure to the agency, the Recipient will promptly notify the agency of the acceptance of any manuscript describing a subject invention for publication or of any on sale or public use planned by the Recipient for such invention.

(3) The Recipient shall furnish the Grant Officer the following:

(i) Interim reports every 12 months (or such longer period as may be specified by the Grant Officer) from the date of the grant, listing reportable items during that period, and certifying that all reportable items have been disclosed (or that there are no such inventions) and that the procedures required by paragraph (e)(1) of this special condition have been followed.

(ii) A final report, within 3 months after completion of the grant work, listing all reportable items or certifying that there were no such reportable items, and listing all subcontracts at any tier containing a patent rights clause or certifying that there were no such subcontracts.

(4) The Recipient agrees, upon written request of the Grant Officer, to furnish additional technical and other information available to the Recipient as is necessary for the preparation of a patent application on a subject invention and for the prosecution of the patent application, and to execute all papers necessary to file patent applications on subject inventions and to establish the Government's rights in the subject inventions.

(5) The Recipient agrees, subject to FAR 27.302(j), that the Government may duplicate and disclose subject invention disclosures and all other reports and papers furnished or required to be furnished pursuant to this special condition.

(f) Examination of records relating to inventions.

(1) The Grant Officer or any authorized representative shall, until 3 years after final payment under this grant, have the right to examine any books (including laboratory notebooks), records, and documents of the Recipient relating to the conception or first actual reduction to practice of inventions in the same field of technology as the work under this grant to determine whether—

(i) Any such inventions are subject inventions;

(ii) The Recipient has established and maintained the procedures required by paragraph (e)(1) of this special condition; and

(iii) The Recipient and its inventors have complied with the procedures.

(2) If the Grant Officer learns of an unreported Recipient grantee invention that the Grant Officer believes may be a subject invention, the Recipient may be required to disclose the invention to the agency for a determination of ownership rights.

(3) Any examination of records under this paragraph will be subject to appropriate conditions to protect the confidentiality of the information involved.

(g) Withholding of payment (this paragraph does not apply to subcontracts).

(1) Any time before final payment under this grant, the Grant Officer may, in the Government's interest, withhold payment until a reserve not exceeding $50,000 or 5 percent of the amount of this grant, whichever is less, shall have been set aside if, in the Grant Officer's opinion, the Recipient fails to—

(i) Establish, maintain, and follow effective procedures for identifying and disclosing reportable items pursuant to paragraph (e)(1) of this special condition;

(ii) Disclose any reportable items pursuant to paragraph (e)(2) of this special condition;

(iii) Deliver acceptable interim reports pursuant to paragraph (e)(3)(i) of this special condition; or

(iv) Provide the information regarding subcontracts pursuant to paragraph (h)(4) of this special condition.

(2) Such reserve or balance shall be withheld until the Grant Officer has determined that the Recipient has rectified whatever deficiencies exist and has delivered all reports, disclosures, and other information required by the grant.

(3) Final payment under the grant shall not be made before the Recipient delivers to the Grant Officer all disclosures of reportable items required by paragraph (e)(2) of this special condition, and an acceptable final report pursuant to paragraph (e)(3)(ii) of this special condition.

(4) The Grant Officer may decrease or increase the sums withheld up to the maximum authorized in paragraph (g)(1) of this special condition. No amount shall be withheld under this paragraph while the amount specified by this paragraph is being withheld under other provisions of the grant. The withholding of any amount or the subsequent payment thereof shall not be construed as a waiver of any Government rights.

(h) Subcontracts.

(1) Unless otherwise authorized or directed by the Grant Officer, the Recipient shall—

(i) Include the clause at NASA FAR Supplement (NFS) 1852.227–70, New Technology, (suitably modified to identify the parties) in any subcontract hereunder (regardless of tier) with other than a small business firm or nonprofit organization for the performance of experimental, developmental, or research work; and

(ii) Include the clause at FAR 52.227–11 (suitably modified to identify the parties) in any subcontract hereunder (regardless of tier) with a small business firm or nonprofit organization for the performance of experimental, developmental, or research work.

(2) In the event of a refusal by a prospective subcontractor to accept such a clause the Recipient—

(i) Shall promptly submit a written notice to the Grant Officer setting forth the subcontractor's reasons for such refusal and other pertinent information that may expedite disposition of the matter; and

(ii) Shall not proceed with such subcontract without the written authorization of the Grant Officer.

(3) In the case of subcontracts at any tier, the agency, subcontractor, and Recipient agree that the mutual obligations of the parties created by this special condition constitute a contract between the subcontractor and NASA with respect to those matters covered by this grant.

(4) The Recipient shall promptly notify the Grant Officer in writing upon the award of any subcontract at any tier containing a patent rights clause by identifying the subcontractor, the applicable patent rights clause, the work to be performed under the subcontract, and the dates of award and estimated completion. Upon request of the Grant Officer, the Recipient shall furnish a copy of such subcontract, and, no more frequently than annually, a listing of the subcontracts that have been awarded.

(5) The subcontractor will retain all rights provided for the Recipient in paragraph (h)(1)(i) or (ii) of this special condition, whichever is included in the subcontract, and the Recipient will not, as part of the consideration for awarding the subcontract, obtain rights in the subcontractor's subject inventions.

(i) Preference for United States industry. Unless provided otherwise, no Recipient that receives title to any subject invention and no assignee of any such Recipient shall grant to any person the exclusive right to use or sell any subject invention in the United States unless such person agrees that any products embodying the subject invention will be manufactured substantially in the United States. However, in individual cases, the requirement may be waived by the Administrator upon a showing by the Recipient or assignee that reasonable but unsuccessful efforts have been made to grant licenses on similar terms to potential licensees that would be likely to manufacture substantially in the United States or that under the circumstances domestic manufacture is not commercially feasible.

§ 1260.58 Designation of new technology representative and patent representative.

Designation of New Technology Representative and Patent Representative

October 2000

(a) For purposes of administration of the special condition of this grant entitled ''New Technology,'' the following named representatives are hereby designated by the Grant Officer to administer such special condition:

Title, Office Code, Address (including zip code)

New Technology
Representative
Patent Representative

(b) Reports of reportable items, and disclosure of subject inventions, interim reports, final reports, utilization reports, and other reports required by the special condition, as well as any correspondence with respect to such matters, should be directed to the New Technology Representative unless transmitted in response to correspondence or request from the Patent Representative. Inquires or requests regarding disposition of rights, election of rights, or related matters should

be directed to the Patent Representative. This special condition shall be included in any subcontract hereunder requiring a ''New Technology'' provision or ''Patent Rights—Retention by the Contractor (Short Form)'' clause, unless otherwise authorized or directed by the Grant Officer. The respective responsibilities and authorities of the above-named representatives are set forth in 1827.305–370 of the NASA FAR Supplement.

§ 1260.59 Choice of law.

Choice of Law

October 2000

The rights and obligations of the parties to the grant (or cooperative agreement) shall be ascertainable by recourse to the laws of the United States of America. However, it is understood that the laws of the Recipient's country will generally apply to recipient activities within that country.

§ 1260.59A Invention reporting and rights.

Invention Reporting and Rights

October 2000

(a) As used in this provision:

(1) The term ''invention'' means any invention or discovery which is or may be patentable or otherwise protectable under Title 35 of the United States Code, or any novel variety of plant which is or may be protected under the Plant Variety Protection Act (7 U.S.C. 2321 *et seq.*).

(2) The term ''made'' when used in relation to any invention means the conception or first actual reduction to practice of such invention.

(b) The Recipient shall report promptly to the grant officer each invention made in the performance of work under this grant. The report of such invention shall—

(1) Identify the inventor(s) by full name; and

(2) Include such full and complete technical information concerning the invention as is necessary to enable an understanding of the nature and operation thereof.

(c) Reporting shall be made on NASA Form 1679 Disclosure of Invention and New Technology (Including Software).

(d) The Recipient hereby grants to the Government of the United States of America, as represented by the Administrator of the National Aeronautics and Space Administration, the full rights, title, and interest in and to each such invention throughout the world.

§ 1260.60 Public information.

Public Information

October 2000

Information regarding this grant (including a copy of this award document) may be released by the Recipient without restriction. However, technical information relating to work performed under this grant where there was a NASA contribution should be released by the Recipient only after consultation with the NASA Technical Officer.

§ 1260.61 Allocation of risk/liability.

Allocation of Risk/Liability

October 2000

(a) With respect to activities undertaken under this agreement, the Recipient agrees not to make any claim against NASA or the U.S. Government with respect to the injury or death of its employees or its contractors and subcontractor employees, or to the loss of its property or that of its Contractors and subcontractors, whether such injury, death, damage or loss arises through negligence or otherwise, except in the case of willful misconduct.

(b) In addition, the Recipient agrees to indemnify and hold the U.S. Government and its Contractors and subcontractors harmless from any third party claim, judgment, or cost arising from the injury to or death of any person, or for damage to or loss of any property, arising as a result of its possession or use of any U.S. Government property.

§ 1260.62 Payment—to foreign organizations.

Payment—To Foreign Organizations

(For grants or cooperative agreements with foreign organizations, this clause will be developed on a case-by-case basis.)

§ 1260.63 Customs clearance and visas.

Customs Clearance and Visas

(For grants or cooperative agreements with foreign organizations, this clause will be developed on a case-by-case basis.)

§ 1260.64 Taxes.

Taxes

(For grants or cooperative agreements with foreign organizations, this clause will be developed on a case-by-case basis.)

§ 1260.65 Exchange of technical data and goods.

Exchange of Technical Data and Goods

(For grants or cooperative agreements with foreign organizations, this clause will be developed on a case-by-case basis.)

§ 1260.66 Listing of reportable equipment and other property.

Listing of Reportable Equipment and Other Property

October 2000

(a) Title to federally-owned property provided to the Recipient remains vested in the Federal Government, and shall be managed in accordance with § 1260.133. The following items of federally-owned property are being provided to the recipient for use in performance of the work under this grant or cooperative agreement:

{List property or state ''not applicable.''}

(b) The following specific items of equipment acquired by the Recipient have been identified by NASA for transfer of title to the Government when no longer required for performance under this grant or cooperative agreement. This equipment will be managed in accordance with 1260.134, and shall be transferred to NASA or NASA's designee in accordance with the procedures set forth at 1260.134(g):

{List property or state ''not applicable.''}

§ 1260.67 Equipment and other property under grants with commercial firms.

Equipment and Other Property Under Grants With Commercial Firms

(a) This grant permits acquisition of special purpose equipment required for the conduct of research. Acquisition of special purpose equipment costing in excess of $5,000 and not included in the approved proposal budget requires the prior approval of the Grant Officer unless the item is merely a different model of an item shown in the approved proposal budget.

(b) Recipients may not purchase, as a direct cost to the grant, items of general purpose equipment, examples of which include but are not limited to office equipment and furnishings, air conditioning equipment, reproduction and printing equipment, motor vehicles, and automatic data processing equipment. If the Recipient requests an exception, the Recipient shall submit a written request for Grant Officer approval, prior to purchase by the Recipient, stating why the Recipient cannot charge the general purpose equipment to indirect costs.

(c) Under no circumstances shall grant funds be used to acquire land or any interest therein, to acquire or construct facilities (as defined in 48 CFR (FAR) 45.301), or to procure passenger carrying vehicles.

(d) The Government shall have title to equipment and other personal property acquired with Government funds. Such property shall be disposed of pursuant to 48 CFR (FAR) 45.603.

(e) Title to Government furnished equipment (including equipment, title to which has been transferred to the Government prior to completion of the work) will remain with the Government.

(f) The Recipient shall establish and maintain property management standards for Government property and otherwise manage such property as set forth in 48 CFR (FAR) 45.5 and 48 CFR (NFS) 1845.5.

(g) Recipients shall submit annually a NASA Form 1018, NASA Property in the Custody of Contractors, in accordance with the instructions on the form, the provisions of 48 CFR (NFS) 1845.71 and any supplemental instructions that may be issued by NASA for the current reporting period. The original NF 1018 shall be submitted to the center Deputy Chief Financial Officer (Finance) with three copies sent concurrently to the center Industrial Property Officer. The annual reporting period shall be from October 1 of each year through September 30 of the following year. The report shall be submitted in time to be received by October 31. Negative reports (*i.e.* no reportable property) are required. The information contained in the reports is entered into the NASA accounting system to reflect current asset values for agency financial statement purposes. Therefore, it is essential that required reports be received no later than October 31. A final report is required within 30 days after expiration of the agreement.

(h) The requirements set forth in this special condition supercedes grant provision 1260.27, Equipment and Other Property.

§ 1260.68 Invoices and payments under grants with commercial firms.

Invoices and Payments Under Grants With Commercial Firms

October 2000

(a) Invoices for payment of actual incurred costs shall be submitted by the Recipient no more frequently than on a_____basis.

(b) Invoices shall be submitted by the Recipient to the following offices:

(1) The original invoice shall be sent directly to the payment office designated on the grant cover page.

(2) Copies of the invoice shall be sent to the NASA Technical Officer and NASA Grant Officer.

(c) All invoices shall reference the grant number.

(d) The final invoice shall be marked ''Final'' and shall be submitted within 90 days of the expiration of the grant.

(e) The requirements set forth in this special condition supercedes grant provision 1260.26, Financial Management.

§ 1260.69 Electronic funds transfer payment methods.

Electronic Funds Transfer Payment Methods

October 2000

(a) Payments under this grant will be made by the Government by electronic funds transfer through the Treasury Fedline Payment System (FEDLINE) or the Automated Clearing House (ACH), at the option of the Government. After award, but no later than 14 days before an invoice is submitted, the Recipient shall designate a financial institution for receipt of electronic funds transfer payments, and shall submit this designation to the Grant Officer or other Government official, as directed.

(b) For payment through FEDLINE, the Recipient shall provide the following information:

(1) Name, address, and telegraphic abbreviation of the financial institution receiving payment.

(2) The American Bankers Association 9-digit identifying number for wire transfers of the financing institution receiving payment if the institution has access to the Federal Reserve Communication System.

(3) Payee's account number at the financial institution where funds are to be transferred.

(4) If the financial institution does not have access to the Federal Reserve Communications System, name, address, and telegraphic abbreviation of the correspondent financial institution through which the financial institution receiving payment obtains wire transfer activity. Provide the telegraphic abbreviation and American Bankers Association identifying number for the correspondent institution.

(c) For payment through ACH, the Recipient shall provide the following information:

(1) Routing transit number of the financial institution receiving payment (same as American Bankers Association identifying number used for FEDLINE).

(2) Number of account to which funds are to be deposited.

(3) Type of depositor account (''C'' for checking, ''S'' for savings).

(4) If the Recipient is a new enrollee to the ACH system, a ''Payment Information Form,'' SF 3881, must be completed before payment can be processed.

(d) In the event the Recipient, during the performance of this grant, elects to designate a different financial institution for the receipt of any payment made using electronic funds transfer procedures, notification of such change and the required information specified above must be received by the appropriate Government official 30 days prior to the date such change is to become effective.

(e) The documents furnishing the information required in this clause must be dated and contain the signature, title, and telephone number of the Recipient official authorized to provide it, as well as the Recipient's name and contract number.

(f) Failure to properly designate a financial institution or to provide appropriate payee bank account information may delay payments of amounts otherwise properly due.

(g) The requirements set forth in this special condition supercedes grant provision 1260.26, Financial Management.

Post-Award Requirements

§ 1260.70 Delegation of administration.

(a) Property administration and closeout of NASA grants and cooperative agreements will be delegated to the Office of Naval Research (ONR). Exceptions to this policy are:

(1) Training grants will not be delegated.

(2) Grants of short duration (9 months or less) or low dollar value ($50k or less) will normally not be delegated.

(3) Grant officers may waive specific administration requirements in exceptional circumstances for individual grants. Exceptions to delegation must be justified and approved in writing by the Grant Officer, and made part of the file.

(4) Waiver of delegation of property administration or closeout to be instituted by a center as a standard practice constitutes a deviation to this handbook, and requires approval in accordance with § 1260.7.

(b) Delegations will be made by use of NF 1674 (Exhibit F to subpart A of this part 1260). The NF 1674, the award document, and the approved budget will be sent to ONR in a single package (electronically, when possible).

(c) Upon acceptance of a delegation, ONR agrees to the following:

(1) On a monthly basis, ONR will provide each center a Report of Accepted Delegations listing each grant or cooperative agreement accepted for administration, with pertinent information including the ONR point of contacts name, phone number, and e-mail address.

(2) On a monthly basis, ONR will electronically send to each Center Commercial Technology Office a listing of New Technology Reports it has received.

(3) On a quarterly basis, ONR will provide the cognizant grant officers a ''List of Delinquent Recipients'' that failed to provide timely interim or final reports.

(4) Property administration should always be delegated, even if it is not anticipated that property will be provided by the government or acquired by the recipient. ONR shall follow DoD property administration policies and procedures, plus the following NASA requirements:

(i) The recipient shall maintain property records and manage nonexpendable personal property in accordance with 14 CFR 1260.134. During Property Control System Analyses (PCSA), ONR will check the recipient's understanding and test compliance of property management requirements, including the accuracy of recipient property reports. ONR will provide one copy of each PCSA Report to the appropriate NASA center industrial property officer.

(ii) ONR will investigate and notify NASA as appropriate for any unauthorized property acquisitions by the recipient. See the provision at § 1260.27.

(iii) ONR will notify the cognizant grant officer and industrial policy officer when property is lost, damaged or destroyed.

(iv) Under no circumstances will Government property be disposed without instructions from NASA.

(v) Prior to disposition, except when returned to NASA or reutilized on other NASA programs, ONR will ensure all NASA identifications are removed or obliterated from property, and hard drives of computers are cleared of sensitive or NASA owned/licensed software/data.

§ 1260.71 Supplements and renewals.

(a) A NASA grant officer can unilaterally make minor or administrative changes to a grant; *e.g.,* Reports Substitution (§ 1260.55) and Withholding (§ 1260.56).

(b) To ensure timely completion and closeout of grants, renewal proposals to continue the same effort at the same institution that are accepted for award by NASA will be awarded as new grants versus continuation of the existing grant.

(1) When work under a grant is to be continued through an extension, or through a renewal of the work under a new grant, the continuation effort should be instituted concurrent with the original expiration date. When possible, the period of performance should be continuous with the prior grant period of performance. The extension or a renewal of a grant (see § 1260.13(a)) beyond the original expiration date is a unilateral decision by NASA based upon availability of funds, continued research relevance, and progress made by the recipient.

(2) To insure uninterrupted programs, the technical office should forward to the grant office a completed award package, including a funded procurement request, technical evaluation of the proposed budget, and other support documentation, at least 29 days before the expiration of the funded period.

(c) Requests by the recipient to have a grant modified must be in writing to the grant officer. Prior approvals and changes are detailed in § 1260.125.

(d) A no-cost extension can be issued by the recipient as detailed in paragraph (b) of the provision at § 1260.23, Extensions, and § 1260.125(e). NASA reserves the right to disapprove the extension request if the requirements set forth at § 1260.125(e)(2) are not met, including if the extension request is not received ten days prior to the grant expiration date.

(e) When two or more actions are completed on a single supplement, the supplement will reflect the effective date of the earliest action.

§ 1260.72 Adherence to original budget estimates.

(a) Although NASA assumes no responsibility for budget overruns, the recipient may spend grant funds without strict adherence to individual allocations within the proposed budgets, except that recipients must comply with prior approval requirements for property and subcontracts as provided in §§ 1260.27 and 1260.33.

(b) The revision of budgets and program plans are covered in § 1260.125.

§ 1260.73 Transfers, novations, and change of name agreements.

(a) When the principal investigator changes organizational affiliation and desires support for the research at a new location, (*i.e.,* for the grant to be transferred), the grant officer should first consult with the institution that originally received the grant to ascertain whether an acceptable replacement principal investigator can be substituted to complete the research effort. The final decision on whether an acceptable replacement is available, or that the research effort should follow the original principal investigator to the new location, is at the discretion of the NASA technical Officer. If the decision is made to transfer the grant, the grant at the original institution must be terminated, and a new proposal must be submitted to NASA via the appropriate officials of the new institution. Although such a proposal will be reviewed in the normal manner, every effort will be made to expedite a decision. Regardless of the action taken on the new proposal, final reports on the original grant, describing the scientific progress and expenditure to date, will be required.

(b) Novation and change of name agreements are administrative actions requiring the involvement of the grant officer. Novations are legal instruments under which obligations of an organization, (including the performance of grants), are assumed by a new organization arising out of a transfer of assets, usually as a result of a merger or acquisition by the new organization. Change of name agreements are legal instruments executed by an organization and NASA that recognizes the legal change of name of the organization without disturbing the original rights or obligations of the parties. Procedures for completing novation and change of name agreements are set forth at FAR subpart 42.12. All novation agreements and change of name agreements of the recipient, prior to execution, shall be reviewed by legal counsel for legal sufficiency. It is recommended that the cognizant ONR office be contacted to determine responsibilities to complete novation or change of name agreements.

§ 1260.74 Property use, disposition, and vesting of title.

(a) Approval for acquisition of property shall conform to the following procedures:

(1) Providing existing government equipment or property, or allowing acquisition of property by a grant recipient, should only be allowed in situations where the recipient justifies the need for the property and cannot carry out the effort with existing property already in the possession of the recipient.

(2) In accordance with OMB Circulars A–21 and A–122, prior approval of property acquisitions is required for special purpose equipment with a unit cost over $5,000, general purpose equipment with a unit cost over $5,000, (unless a lower threshold has been established by the recipient), or coherent systems (as defined in § 1260.74(e)) with a value of over $5,000. Grant awards under the Federal Demonstration Partnership are exempt from this requirement. The NASA grant officer will retain authority for approving the expenditure of grant funds for the acquisition of such equipment. Requests by grant recipients for the acquisition of equipment shall be supported by written documentation setting forth the description, purpose, and acquisition value of the equipment, and include a written certification that the equipment will be used exclusively for research. (A change in the model number of a prior approved piece of equipment does not require re-submission for that item.) NASA grant officers shall not approve the expenditure of grant funds for the acquisition of equipment unless the recipient's justification for the equipment demonstrates that the equipment will be used exclusively for research activities.

(b) Vesting of title to property acquired by the recipient shall conform to the following procedures:

(1) For awards to educational institutions and non-profit organizations, special purpose and general purpose equipment costing in excess of $5,000 (unless a lower threshold has been established by the recipient) acquired by the recipient under a grant or cooperative agreement for the purpose of research shall be titled to the recipient as ''exempt'' equipment as set forth at § 1260.133(b). The recipient shall have no further obligation or accountability to the Federal Government for the use or disposition of ''exempt'' property, including reporting requirements. Special purpose and general purpose equipment costing in excess of $5,000 (unless a lower threshold has been established by the recipient) acquired by the recipient under a grant or cooperative agreement for non-research work shall be titled to the recipient in accordance with § 1260.134.

(2) For awards to commercial organizations, the following property procedures will apply:

(i) Acquisition of special purpose equipment costing in excess of $5,000 and not included in the approved proposal budget requires the prior approval of the grant officer unless the item is merely a different model of an item shown in the approved proposal budget.

(ii) Recipients may not purchase, as a direct cost to the grant, items of general purpose equipment, examples of which

include but are not limited to office equipment and furnishings, air conditioning equipment, reproduction and printing equipment, motor vehicles, and automatic data processing equipment. If the recipient requests an exception, the recipient shall submit a written request for grant officer approval, prior to purchase by the recipient, stating why the recipient cannot charge the general purpose equipment to indirect costs.

(iii) Under no circumstances shall grant funds be used to acquire land or any interest therein, to acquire or construct facilities (as defined in 48 CFR (FAR) 45.301), or to procure passenger carrying vehicles.

(iv) The Government shall have title to equipment and other personal property acquired with Government funds. Such property shall be disposed of pursuant to 48 CFR (FAR) 45.603.

(v) Title to Government furnished equipment (including equipment, title to which has been transferred to the Government prior to completion of the work) will remain with the Government.

(vi) The Recipient shall establish and maintain property management standards for Government property and otherwise manage such property as set forth in 48 CFR (FAR) 45.5 and 48 CFR (NFS) 1845.5.

(vii) Recipients shall submit annually a NASA Form 1018, NASA Property in the Custody of Contractors, in accordance with the instructions on the form, the provisions of 48 CFR (NFS) 1845.71 and any supplemental instructions that may be issued by NASA for the current reporting period. The original NF 1018 shall be submitted to the center Deputy Chief Financial Officer, Finance, with three copies sent concurrently to the center industrial property officer. The annual reporting period shall be from October 1 of each year through September 30 of the following year. The report shall be submitted in time to be received by October 31. Negative reports (*i.e.* no reportable property) are required. The information contained in the reports is entered into the NASA accounting system to reflect current asset values for agency financial statement purposes. Therefore, it is essential that required reports be received no later than October 31. A final report is required within 30 days after expiration of the agreement.

(c) Equipment with a unit price of $5,000 or less (unless a lower threshold has been established by the recipient) is properly classified as ''supplies,'' is not subject to transfer to the Agency, and will be titled to the recipient in accordance with § 1260.135.

(d) Title to Federally-owned property remains with the Government, and is subject to the following additional requirements:

(1) In accordance with Public Law 94–519, NASA will not acquire property from other agencies for use on NASA grants.

(2) Government property provided to a grant recipient for use under a grant will be identified through inclusion of the special condition at § 1260.66, Listing of Reportable Equipment and Other Property.

(3) When Federally-owned property is reported excess by a recipient, the administrative grant officer will report the equipment to the center industrial property officer, who will consult with the technical officer concerning property disposition.

(4) NASA policy encourages the donation of existing, excess NASA property to nonprofit organizations whose primary purpose is the conduct of scientific research.

(e) When two or more components are fabricated into a single coherent system in such a way that the components lose their separate identities, and their separation would render the system useless for its original purpose, the components will be considered as integral parts of a single system. If such a system includes recipient-owned components, the property will be considered to be exempt. The requirement for agreement regarding NASA's retention of its option to take title shall further apply where it is expected that one or more recipient-acquired components costing $5,000 or less will be fabricated into a single coherent system costing in excess of $5,000. However, an item that is used ancillary to a system, without loss of its separate identity and usefulness, will be considered as a separate item and not as an integral component of the system.

(f) Property administration and plant clearance for all grants and cooperative agreements will be delegated to the appropriate ONR office.

(g) NASA grant officers will provide copies of property related grant documentation to the center industrial property officer and to the Office of Naval Research (at time of award or modification) when the NASA program office elects to retain title to an existing item of Government property, to furnish the property to the recipient in lieu of donation, or to take title to property acquired by the recipient. When NASA acquires title to items of recipient acquired equipment or when NASA transfers an item of Government property to a recipient as Federally owned property, the NASA grant officer shall notify the cognizant NASA center financial management officer, the industrial property officer and Office of Naval Research to ensure proper entries in financial and property accounting records.

§ 1260.75 Summary of report requirements.

(a) Report responsibilities of the grant officer are set forth as follows:

(1) The grant officer is responsible for submitting the Individual Procurement Action Report (NF 507) for all grant and cooperative agreement actions.

(2) The Committee on Academic Science and Engineering (CASE) Report (NF 1356), for grants and cooperative agreements awarded to educational institutions, is submitted by the program office with the basic award procurement request and completed by the grant officer. The grant officer should initiate an amendment to the NF 1356 whenever the principal investigator or the technical officer changes.

(b) Intermediate report responsibilities of the recipient are as follows:

(1) The Federal Cash Transactions Report (SF 272) shall be submitted by the recipient, in accordance with § 1260.26(a), as a condition of receiving advance payments. Instructions and answers to payment questions will be provided by the Financial Management Office of the Center that issued the grant. (see § 1260.152.)

(2) The annual Inventory Report of Federally Owned Property in Custody of the Recipient will be submitted by the recipient as required by § 1260.27(e). The listing shall include information specified in § 1260.134(f) together with beginning and ending dollar value totals for the reporting period. Negative reports (*i.e.,* where no property has been acquired or provided, or where all acquired property has been titled to the recipient as exempt) are not required. Please note that any property acquired by the recipient and not titled to the recipient as exempt, must be reported, even when titled to the recipient as non-exempt property in accordance with the procedures set forth at § 1260.134.

(3) A Progress Report shall be submitted in accordance with §§ 1260.22 and 1260.151. Recipients are not required to submit more than the original and two copies. At the request of the technical officer, technical reports can be submitted as new findings are made rather than on a predetermined time schedule, by use of the special condition at § 1260.55, entitled ''Reports Substitution.''

(4) An Educational Activity Report is required annually for education grants in accordance with § 1260.22. The report is due 60 days prior to the anniversary date of the grant or cooperative agreement.

(5) A Report of Joint NASA/Recipient Inventions is required for all grants and cooperative agreements, as applicable, in accordance with § 1260.28.

(6) A Disclosure of Subject Invention is required for all grants and cooperative agreements, as applicable, in accordance with § 1260.28. The reporting of the invention shall be made within two months after the inventor discloses it to the recipient, and will be reported on NASA Form 1679 Disclosure of Invention and New Technology (Including Software) in accordance with the procedures set forth under § 1260.28.

(7) An Election of Title to a Subject Invention is required for all grants and cooperative agreements, as applicable, in accordance with § 1260.28. The notice is due within 1 year after disclosure of the subject invention if a statutory bar exists, otherwise within 2 years.

(8) A Listing of Subject Inventions is required for all grants and cooperative agreement, in accordance with § 1260.28. The listing is due annually.

(9) A Notification of Decision to Forego Patent Protection is required for all grants and cooperative agreements, as applicable, in accordance with § 1260.28. The notification is due 30 days before the expiration of the response period.

(10) A Utilization of Subject Invention Report is required for all grants and cooperative agreements, as applicable, in accordance with § 1260.28. The report is due annually.

(11) A Notice of Proposed Transfer of Technology is required for all grants and cooperative agreements, as applicable, in accordance with § 1260.30. The notice is required prior to transferring technology to a foreign firm or institution.

(12) An Annual NASA Form 1018, NASA Property in the Custody of Contractors, is required for all grants and cooperative agreements with commercial organizations. The reports are due October 31st of each year. Negative reports (*i.e.* no reportable property) are required.

(c) Final report responsibilities of the recipient are as follows:

(1) A Subject Inventions Final Report is required for all grants and cooperative agreements, as applicable, in accordance with § 1260.28. The report is due within 90 days after the expiration of the grant or cooperative agreement.

(2) A properly certified Final Federal Cash Transactions Report, SF 272, is required from the recipient for each grant, in accordance with §§ 1260.26(a) and 1260.152. The report is due within 90 days after the expiration of the grant or cooperative agreement.

(3) A Summary of Research is required for all research grants in accordance with § 1260.22. Citation of publications resulting from research, or abstracts thereof, may serve as all or part of the Summary of Research. The Summary of Research shall also include a complete list of all subject inventions (or negative statement) required to be disclosed that resulted from the work (see the provision at § 1260.28).

(4) A Final Inventory Report of Federally Owned Property, including equipment where title was taken by the Government, is required for all grants and cooperative agreements, where property or equipment has been provided by the government or acquired by the recipient, § 1260.27. The report is due within 60 days after the expiration of the grant or cooperative agreement. Negative reports (*i.e.,* where no property has been acquired or provided) are required.

(5) A Final Educational Activity Report is required for all education grants or cooperative agreements. The report is due within 90 days after the expiration of the grant or cooperative agreement.

(6) A Faculty Advisor Survey is required for all training grants. The report is due from the student's faculty advisor within 60 days after the expiration of the training grant.

(7) A Summary of Research is required for all training grants. The report is due from the student within 90 days after the expiration of the training grant.

(8) An Administrative Report is required for all training grants. The report is due within 90 days after the expiration of the training grant.

(9) A Student Evaluation Form is required for all training grants. The form is due from the student within 90 days after the expiration of the training grant.

(10) A Final NASA Form 1018, NASA Property in the Custody of Contractors, is required for all grants and cooperative agreements with commercial organizations. The report is due within 30 days after the expiration of the grant or cooperative agreement.

(d) To clarify report requirements to grant and cooperative agreement recipients, the grant officer will include the ''Required Publications and Reports'' form (Exhibit G to subpart A of this part 1260) as part of the award document.

§ 1260.76 Termination and enforcement.

(a) Suspension or termination of a grant prior to the planned expiration date must be reserved for exceptional situations that cannot be handled any other way (see § 1260.160).

(b) The Director, Program Operations Division (Code HS), shall provide to the General Services Administration information concerning all NASA debarments, suspensions, determinations of ineligibility, and voluntary exclusions of persons in accordance with 14 CFR 1265.505.

(c) Remedies for Noncompliance are delineated in § 1260.162.

(d) Failure of the recipient to provide a required report can result in the Agency and the public being denied information about grant activities, NASA officials having less information for making decisions, grant closeout being delayed, and confidence being undermined as to whether the recipient will meet the requirements under other grants. Because NASA grants provide for advance payments, a recipient could be fully paid before final reports are due. At this point, it is too late to withhold payment on the existing grant.

(e) Consistent with §§ 1260.122(h) and 1260.162(a), NASA may suspend or terminate advance payments from recipients that fail to comply with reporting requirements. To remedy failure to furnish timely reports, special condition at § 1260.56, Withholding, should be used when awarding a new grant or modifying an existing grant with non-responsive organizations.

(1) Special condition at § 1260.56 allows the grant officer to instruct the Financial Management Office to suspend or terminate advance payments under an institutions letter of credit pending receipt of the satisfactorily completed reports required in § 1260.75.

(2) The grant officer may waive the withholding requirement when the recipient has taken corrective action that makes withholding unnecessary. To release for payment the amount withheld, grant officers shall send a memorandum to their Financial Management Office.

§ 1260.77 Closeout procedures.

Closeout is the process by which NASA determines that all applicable administrative actions and all required work under the instrument have been completed by both the recipient and NASA and no further activity is expected (see § 1260.171).

(a) Closeout will begin within 90 days after the expiration date of the grant. NASA's goal for closeout to be completed is within 180 days after the expiration of the grant.

(b) Those who are designated to receive NASA reports (except for CASI, which only acknowledges receipt) must provide certification to the NASA grant officer, and to ONR when delegated, that the reports have been received and satisfactorily completed. Electronic certifications are acceptable. See §§ 1260.75 and 1260.171(a). The property certification should indicate that disposal of any remaining Government property has been made as directed and that NASA has been compensated for any residual inventory.

(c) When ONR has been delegated closeout and has completed its actions, the NASA grant officer is to receive from ONR all of the following:

(1) Certification that all required reports have been received and approved. However, when a NASA technical officer does not respond to a third request from ONR to provide a certification for a Summary of Research, ONR may provide a ''qualified acceptance statement'' in lieu of the required certification, after providing written notification to the NASA grant officer.

(2) A DD Form 1593 Contract Administration Completion Record (or equivalent electronic notification), without supporting or backup documents, indicating property administration is complete.

(3) An original, signed DD Form 1594 Contract Completion Statement.

(d) A grant is administratively complete and ready for closeout when:

(1) Property disposition has been completed.

(2) Certifications for all reports have been received.

(3) A DD Form 1594 has been received, when delegated.

(4) Payments have been made for allowable reimbursable costs, and refunds have been received for any balance of unobligated cash advanced that is not authorized to be retained for use on other grants (see §§ 1260.171 through 1260.173).

(e) Grants will not be closed out if litigation or an appeal is pending, or when termination action has not been completed.

(f) Records will be retained in accordance with § 1260.153 and NPG 1441.1, Record Retention Schedules. As set forth in the NPG, grant files are generally retired to the Federal Records Center 2 years after completion of the grant or agreement, and destroyed when 6 years, 3 months old.

Appendix to Subpart A to Part 1260—Listing of Exhibits

Exhibit A—Budget Summary
Exhibit B—Standard Grant and Cooperative Agreement Cover Page
Exhibit C—Provisions
Exhibit D—Federal Demonstration Partnership Terms and Conditions
Exhibit E—Special Conditions for Cooperative Agreements between NASA and the Commercial Space Centers
Exhibit F—NASA 1674 Letter of Delegation for the Administration of Grants and Cooperative Agreements
Exhibit G—Required Publications and Reports

Note: Exhibits are available at NASA Headquarters, Code HC, Washington, D.C. 20546.

Subpart B—Uniform Administrative Requirements for Grants and Cooperative Agreements With Institutions of Higher Education, Hospitals, and Other Non-Profit Organizations

General

§ 1260.101 Purpose.

This subpart implements OMB Circular No. A–110 and establishes uniform administrative requirements for NASA grants and agreements awarded to institutions of higher education, hospitals, and other non-profit organizations. NASA shall not impose additional or inconsistent requirements, except as provided in §§ 1260.104 and 1260.114 or unless specifically required by Federal statute or executive order. Non-profit organizations that implement Federal programs for the States are also subject to State requirements.

§ 1260.102 Definitions.

Accrued expenditures means the charges incurred by the recipient during a given period requiring the provision of funds for:

(1) Goods and other tangible property received;

(2) Services performed by employees, contractors, subcontractors, and other payees; and

(3) Other amounts becoming owed under programs for which no current services or performance is required.

Accrued income means the sum of:

(1) Earnings during a given period from services performed by the recipient, and goods and other tangible property delivered to purchasers; and

(2) Amounts becoming owed to the recipient for which no current services or performance is required by the recipient.

Acquisition cost of equipment means the net invoice price of the equipment, including the cost of modifications, attachments, accessories, or auxiliary apparatus necessary to make the property usable for the purpose for which it was acquired. Other charges, such as the cost of installation, transportation, taxes, duty or protective in-transit insurance, shall be included or excluded from the unit acquisition cost in accordance with the recipient's regular accounting practices.

Advance means a payment made by Treasury check or other appropriate payment mechanism to a recipient upon its request either before outlays are made by the recipient or through the use of predetermined payment schedules.

Award means a grant or cooperative agreement that provides support or stimulation to accomplish a public purpose. Awards include research grants, training grants, facilities grants, educational grants, and cooperative agreements in the form of money or property in lieu of money, by NASA to an eligible recipient. The term does not include: Technical assistance, which provides services instead of money; other assistance in the form of loans, loan guarantees, interest subsidies, or insurance; direct payments of any kind to individuals; and, contracts which are required to be entered into and administered under procurement laws and regulations.

Cash contributions means the recipient's cash outlay, including the outlay of money contributed to the recipient by third parties.

Closeout means the process by which NASA determines that all applicable administrative actions and all required work of the award have been completed by the recipient and NASA.

Contract means a procurement contract under an award, and a procurement subcontract under a recipient's contract.

Cost sharing or matching means that portion of project or program costs not borne by NASA.

Date of completion means the date on which all work under an award is completed or the date on the award document, or any supplement or amendment thereto, on which NASA sponsorship ends.

Disallowed costs means those charges to an award that NASA determines to be unallowable, in accordance with the applicable Federal cost principles or other terms and conditions contained in the award.

Equipment means tangible nonexpendable personal property including exempt property charged directly to the award having a useful life of more than one year and an acquisition cost of $5,000 or more per unit. However, consistent with recipient policy, lower limits may be established.

Excess property means property under the control of any Federal awarding agency that, as determined by the head

thereof, is no longer required for its needs or the discharge of its responsibilities.

Exempt property means tangible personal property acquired in whole or in part with Federal funds, where a Federal awarding agency has statutory authority to vest title in the recipient without further obligation to the Federal Government. An example of exempt property authority is contained in the Federal Grant and Cooperative Agreement Act (31 U.S.C. 6306) for property acquired under an award to conduct basic or applied research by a non-profit institution of higher education or non-profit organization whose principal purpose is conducting scientific research.

Federal funds authorized means the total amount of Federal funds obligated by the Federal Government for use by the recipient. This amount may include any authorized carryover of unobligated funds from prior funding periods when permitted by agency regulations or agency implementing instructions.

Federal share of real property, equipment, or supplies means that percentage of the property's acquisition costs and any improvement expenditures paid with Federal funds.

Funding period means the period of time when NASA funding is available for obligation by the recipient.

Intangible property and debt instruments means, but is not limited to, trademarks, copyrights, patents and patent applications and such property as loans, notes and other debt instruments, lease agreements, stock and other instruments of property ownership, whether considered tangible or intangible.

NASA means the National Aeronautics and Space Administration (NASA), including its authorized representatives.

Obligations mean the amounts of orders placed, contracts and grants awarded, services received and similar transactions during a given period that require payment by the recipient during the same or a future period.

Outlays or expenditures means charges made to the project or program. They may be reported on a cash or accrual basis. For reports prepared on a cash basis, outlays are the sum of cash disbursements for direct charges for goods and services, the amount of indirect expense charged, the value of third party in-kind contributions applied and the amount of cash advances and payments made to subcontractors. For reports prepared on an accrual basis, outlays are the sum of cash disbursements for direct charges for goods and services, the amount of indirect expense incurred, the value of in-kind contributions applied, and the net increase (or decrease) in the amounts owed by the recipient for goods and other property received, for services performed by employees, contractors, subcontractors and other payees and other amounts becoming owed under programs for which no current services or performance are required.

Personal property means property of any kind except real property. It may be tangible, having physical existence, or intangible, having no physical existence, such as copyrights, patents, or securities.

Prior approval means written approval by an authorized official evidencing prior consent.

Program income means gross income earned by the recipient that is directly generated by a supported activity or earned as a result of the award (see exclusions in § 1260.124(c) and (f)). Program income includes, but is not limited to, income from fees for services performed, the use or rental of real or personal property acquired under federally-funded projects, the sale of commodities or items fabricated under an award, license fees and royalties on patents and copyrights, and interest on loans made with award funds. Interest earned on advances of NASA funds is not program income. Except as otherwise provided in the regulations in this subpart or the terms and conditions of the award, program income does not include the receipt of principal on loans, rebates, credits, discounts, etc., or interest earned on any of them.

Project costs means all allowable costs, as set forth in the applicable Federal cost principles, incurred by a recipient and the value of the contributions made by third parties in accomplishing the objectives of the award during the project period.

Project period means the period established in the award document during which NASA sponsorship begins and ends.

Property means, unless otherwise stated, real property, equipment, intellectual property and debt instruments.

Real property means land, including land improvements, structures and appurtenances thereto, but excludes movable machinery and equipment.

Recipient means an organization receiving an award directly from NASA to carry out a project or program. The term includes public and private institutions of higher education, public and private hospitals, and other quasi-public and private non-profit organizations such as, but not limited to, community action agencies, research institutes, educational associations, and health centers. The term may include commercial organizations, foreign or international organizations (such as agencies of the United Nations) which are recipients, subcontractors, or contractors or subcontractors of recipients. The term does not include government-owned contractor-operated facilities or research centers providing continued support for mission-oriented, large-scale programs that are government-owned or controlled, or are designated as federally-funded research and development centers.

Research and development means all research activities, both basic and applied, and all development activities that are supported at universities, colleges, and other nonprofit institutions. ''Research'' is defined as a systematic study directed toward fuller scientific knowledge or understanding of the subject studied. ''Development'' is the systematic use of knowledge and understanding gained from research directed toward the production of useful materials, devices, systems, or methods, including design and development of prototypes and processes. The term ''research'' also included activities involving the training of individuals in research techniques where such activities utilize the same facilities as other research and development activities and where such activities are not included in the instruction function.

Small awards means a grant or cooperative agreement not exceeding the small purchase threshold.

Subaward means an award of financial assistance in the form of money, or property in lieu of money, made under an award by a recipient to an eligible subrecipient or by a subrecipient to a lower tier subrecipient. The term includes financial assistance when provided by any legal agreement, even if the agreement is called a contract, but does not include procurement of goods and services nor does it include any form of assistance which is excluded from the definition of ''award'' of this section.

Subrecipient means the legal entity to which a subaward is made and which is accountable to the recipient for the use of the funds provided. The term may include foreign or international organizations (such as agencies of the United Nations).

Supplies means all personal property excluding equipment, intellectual property, and debt instruments as defined in this section, and inventions of a contractor conceived or first actually reduced to practice in the performance of work under a funding

agreement (''subject inventions''), as defined in 37 CFR part 401, ''Rights to Inventions Made by Nonprofit Organizations and Small Business Firms Under Government Grants, Contracts, and Cooperative Agreements.''

Suspension means an action by NASA that temporarily withdraws NASA sponsorship under an award, pending corrective action by the recipient or pending a decision to terminate the award by NASA. Suspension of an award is a separate action from suspension under Federal agency regulations implementing Executive Orders 12549 and 12689, ''Debarment and Suspension.''

Termination means the cancellation of Federal sponsorship, in whole or in part, under an agreement at any time prior to the date of completion.

Third party in-kind contributions means the value of non-cash contributions provided by non-Federal third parties. Third party in-kind contributions may be in the form of real property, equipment, supplies and other expendable property, and the value of goods and services directly benefiting and specifically identifiable to the project or program.

Unliquidated obligations, for financial reports prepared on a cash basis, means the amount of obligations incurred by the recipient that have not been paid. For reports prepared on an accrued expenditure basis, they represent the amount of obliga tions incurred by the recipient for which an outlay has not been recorded.

Unobligated balance means the portion of the funds authorized by NASA that has not been obligated by the recipient and is determined by deducting the cumulative obligations from the cumulative funds authorized.

Unrecovered indirect cost means the difference between the amount awarded and the amount which could have been awarded under the recipient's approved negotiated indirect cost rate.

Working capital advance means a procedure whereby funds are advanced to the recipient to cover its estimated disbursement needs for a given initial period.

§ 1260.103 Effect on other issuances.

For awards subject to this subpart, the requirements of this subpart apply, except to the extent that any administrative requirements of codified program regulations, program manuals, handbooks and other nonregulatory materials are required by statute, or are authorized in accordance with the deviations provision in § 1260.104.

§ 1260.104 Deviations.

The Office of Management and Budget (OMB) may grant exceptions for classes of grants or recipients subject to the requirements of this subpart when exceptions are not prohibited by statute. However, in the interest of maximum uniformity, exceptions from the requirements of this subpart shall be permitted only in unusual circumstances. NASA may apply more restrictive requirements to a class of recipients when approved by OMB. NASA may apply less restrictive requirements when awarding small awards, except for those requirements which are statutory. Exceptions on a case-by-case basis may also be made by NASA. See § 1260.6(c).

§ 1260.105 Subawards.

Unless sections of this subpart specifically exclude subrecipients from coverage, the provisions of this subpart shall be applied to subrecipients performing work under awards if such subrecipients are institutions of higher education, hospitals or other non-profit organizations. State and local government subrecipients are subject to the provisions of 14 CFR part 1273, ''Uniform Administrative Requirements for Grants and Cooperative Agreements to State and Local Governments.''

Pre-Award Requirements

§ 1260.110 Purpose.

Sections 1260.111 through 1260.117 prescribe forms and instructions and other pre-award matters to be used in applying for NASA awards.

§ 1260.111 Pre-award policies.

(a) *Use of grants and cooperative agreements, and contracts.* In each instance, NASA shall decide on the appropriate award instrument (*i.e.* grant, cooperative agreement, or contract). The Federal Grant and Cooperative Agreement Act (31 U.S.C. 6301–08) governs the use of grants, cooperative agreements and contracts. A grant or cooperative agreement shall be used only when the principal purpose of a transaction is to accomplish a public purpose of support or stimulation authorized by Federal statute. The statutory criterion for choosing between grants and cooperative agreements is that for the latter, ''substantial involvement is expected between the executive agency and the State, local government, or other recipient when carrying out the activity contemplated in the agreement.'' Contracts shall be used when the principal purpose is acquisition of property or services for the direct benefit or use of the Federal Government.

(b) *Public notice and priority setting.* NASA notifies the public of its intended funding priorities for discretionary grant programs through Broad Agency Announcements, Cooperative Agreement Notices, Agency-Wide program announcements, and other approved forms of announcements.

§ 1260.112 Forms for applying for Federal assistance.

(a) NASA shall comply with the applicable report clearance requirements of 5 CFR part 1320, ''Controlling Paperwork Burdens on the Public,'' with regard to all forms used by the NASA in place of or as a supplement to the Standard Form 424 (SF 424) series.

(b) Applicants shall use those forms and instructions prescribed by NASA in § 1260.10.

1260.113 Debarment and suspension.

NASA and recipients shall comply with the nonprocurement debarment and suspension rule, 14 CFR part 1265, ''Governmentwide Debarment and Suspension (Nonprocurement) and Governmentwide Requirements for Drug-Free Workplace (Grants),'' implementing Executive Orders 12549 and 12689, ''Debarment and Suspension.'' This rule restricts contracts with certain parties that are debarred, suspended or otherwise excluded from or ineligible for participation in Federal assistance programs or activities.

§ 1260.114 Special award conditions.

If an applicant or recipient has a history of poor performance, is not financially stable, has a management system that does not meet the standards prescribed in this subpart, has not conformed to the terms and conditions of a previous award, or is not otherwise responsible, NASA may impose additional requirements as needed. Such applicant or recipient will be notified in writing as to the nature of the additional requirements, the reason why the additional requirements are being imposed, the nature of the corrective action needed, the time allowed for completing the corrective actions, and the method for requesting reconsideration of the additional requirements imposed. Any special conditions shall be promptly removed once the conditions that prompted them have been corrected.

§ 1260.115 Metric system of measurement.

The Metric Conversion Act, as amended by the Omnibus Trade and Competitiveness Act (15 U.S.C. 205) declares that the metric system is the preferred measurement system for U.S.

trade and commerce. The Act requires each Federal agency to establish a date or dates in consultation with the Secretary of Commerce, when the metric system of measurement will be used in the agency's procurements, grants, and other business-related activities. Metric implementation may take longer where the use of the system is initially impractical or likely to cause significant inefficiencies in the accomplishment of federally-funded activities. NASA follows the provisions of Executive Order 12770, ''Metric Usage in Federal Government Programs.'' NASA's policy with respect to the metric measurement system is stated in NASA Policy Directive (NPD) 8010.2, Use of the Metric System of Measurement in NASA Programs.

§ 1260.116 Resource Conservation and Recovery Act (RCRA).

Under the RCRA (Pub. L. 94–580 codified at 42 U.S.C. 6962), any State agency or agency of a political subdivision of a State which is using appropriated Federal funds must comply with section 6002 of the RCRA (42 U.S.C. 6962). Section 6002 requires that preference be given in procurement programs to the purchase of specific products containing recycled materials identified in guidelines developed by the Environmental Protection Agency (EPA) (40 CFR parts 247 through 254). Accordingly, State and local institutions of higher education, hospitals, and non-profit organizations that receive direct Federal awards or other Federal funds shall give preference in their procurement programs funded with Federal funds to the purchase of recycled products pursuant to the EPA guidelines.

§ 1260.117 Certifications and representations.

Unless prohibited by statute or codified regulation, NASA will allow recipients to submit certain certifications and representations required by statute, executive order, or regulation on an annual basis, if the recipients have ongoing and continuing relationships with the agency. Annual certifications and representations shall be signed by responsible officials with the authority to ensure recipients' compliance with the pertinent requirements.

Post-Award Requirements

Financial and Program Management

§ 1260.120 Purpose of financial and program management.

Sections 1260.121 through 1260.128 prescribe standards for financial management systems, methods for making payments and rules for: satisfying cost sharing and matching requirements, accounting for program income, budget revision approvals, making audits, determining allowability of cost, and establishing fund availability.

§ 1260.121 Standards for financial management systems.

(a) Recipients shall relate financial data to performance data and develop unit cost information whenever practical. For awards that support research, it should be noted that it is generally not appropriate to develop unit cost information.

(b) Recipients' financial management systems shall provide for the following.

(1) Accurate, current and complete disclosure of the financial results of each federally-sponsored project or program in accordance with the reporting requirements set forth in § 1260.152. If NASA requires reporting on an accrual basis from a recipient that maintains its records on other than an accrual basis, the recipient shall not be required to establish an accrual accounting system. These recipients may develop such accrual data for its reports on the basis of an analysis of the documentation on hand.

(2) Records that identify adequately the source and application of funds for federally-sponsored activities. These records shall contain information pertaining to Federal awards, authorizations, obligations, unobligated balances, assets, outlays, income and interest.

(3) Effective control over and accountability for all funds, property and other assets. Recipients shall adequately safeguard all such assets and assure they are used solely for authorized purposes.

(4) Comparison of outlays with budget amounts for each award. Whenever appropriate, financial information should be related to performance and unit cost data.

(5) Written procedures to minimize the time elapsing between the transfer of funds to the recipient from the U.S. Treasury and the issuance or redemption of checks, warrants or payments by other means for program purposes by the recipient. To the extent that the provisions of the Cash Management Improvement Act (CMIA) (Pub. L. 101–453) govern, payment methods of State agencies, instrumentalities, and fiscal agents shall be consistent with CMIA Treasury-State Agreements or the CMIA default procedures codified at 31 CFR part 205, ''Withdrawal of Cash from the Treasury for Advances under Federal Grant and Other Programs.''

(6) Written procedures for determining the reasonableness, allocability and allowability of costs in accordance with the provisions of the applicable Federal cost principles and the terms and conditions of the award.

(7) Accounting records including cost accounting records that are supported by source documentation.

(c) Where the Federal Government guarantees or insures the repayment of money borrowed by the recipient, NASA, at its discretion, may require adequate bonding and insurance if the bonding and insurance requirements of the recipient are not deemed adequate to protect the interest of the Federal Government.

(d) NASA may require adequate fidelity bond coverage where the recipient lacks sufficient coverage to protect the Federal Government's interest.

(e) Where bonds are required in the situations described in this section, the bonds shall be obtained from companies holding certificates of authority as acceptable sureties, as prescribed in 31 CFR part 223, ''Surety Companies Doing Business with the United States.''

§ 1260.122 Payment.

(a) Payment methods shall minimize the time elapsing between the transfer of funds from the United States Treasury and the issuance or redemption of checks, warrants, or payment by other means by the recipients. Payment methods of State agencies or instrumentalities shall be consistent with Treasury-State CMIA agreements or default procedures codified at 31 CFR part 205.

(b)(1) Recipients are to be paid in advance, provided they maintain or demonstrate the willingness to maintain:

(i) Written procedures that minimize the time elapsing between the transfer of funds and disbursement by the recipient; and

(ii) Financial management systems that meet the standards for fund control and accountability as established in § 1260.121.

(2) Cash advances to a recipient organization shall be limited to the minimum amounts needed and be timed to be in accordance with the actual, immediate cash requirements of the recipient organization in carrying out the purpose of the approved program or project. The timing and amount of cash advances shall be as close as is administratively feasible to the actual disbursements by the recipient organization for direct program or

project costs and the proportionate share of any allowable indirect costs.

(c) Whenever possible, advances shall be consolidated to cover anticipated cash needs for all awards made by NASA to the recipient.

(1) Advance payments will be made by electronic funds transfer.

(2) Advance payment mechanisms are subject to 31 CFR part 205.

(d) [Reserved. Not used by NASA.]

(e) Reimbursement is the preferred method when the requirements in paragraph (b) of this section cannot be met. NASA may also use this method on any construction agreement, or if the major portion of the construction project is accomplished through private market financing or Federal loans, and the Federal assistance constitutes a minor portion of the project. When the reimbursement method is used, NASA shall make payment within 30 days after receipt of the billing, unless the billing is improper.

(f) If a recipient cannot meet the criteria for advance payments and NASA has determined that reimbursement is not feasible because the recipient lacks sufficient working capital, NASA may provide cash on a working capital advance basis. Under this procedure, NASA shall advance cash to the recipient to cover its estimated disbursement needs for an initial period generally geared to the awardee's disbursing cycle. Thereafter, NASA shall reimburse the recipient for its actual cash disbursements. The working capital advance method of payment shall not be used for recipients unwilling or unable to provide timely advances to their subcontractor to meet the subcontractor's actual cash disbursements.

(g) To the extent available, recipients shall disburse funds available from repayments to an interest earned on a revolving fund, program income, rebates, refunds, contract settlements, audit recoveries and interest earned on such funds before requesting additional cash payments.

(h) Unless otherwise required by statute, NASA will not withhold payments for proper charges made by recipients at any time during the project period unless the conditions in paragraphs (h)(1) or (2) of this section apply.

(1) A recipient has failed to comply with the project objectives, the terms and conditions of the award, or NASA reporting requirements.

(2) The recipient is delinquent in a debt to the United States as defined in OMB Circular A–129, ''Managing Federal Credit Programs.'' Under such conditions, NASA may, upon reasonable notice, inform the recipient that payments shall not be made for obligations incurred after a specified date until the conditions are corrected or the indebtedness to the Federal Government is liquidated.

(i) Standards governing the use of banks and other institutions as depositories of funds advanced under awards are as follows.

(1) Except for situations described in paragraph (i)(2) of this section, NASA shall not require separate depository accounts for funds provided to a recipient or establish any eligibility requirements for depositories for funds provided to a recipient. However, recipients must be able to account for the receipt, obligation and expenditure of funds.

(2) Advances of Federal funds shall be deposited and maintained in insured accounts whenever possible.

(j) Consistent with the national goal of expanding the opportunities for women-owned and minority-owned business enterprises, recipients shall be encouraged to use women-owned and minority-owned banks (a bank which is owned at least 50 percent by women or minority group members).

(k) Recipients shall maintain advances of Federal funds in interest bearing accounts, unless the conditions in paragraphs (k)(1), (2), or (3) of this section apply.

(1) The recipient receives less than $120,000 in Federal awards per year.

(2) The best reasonably available interest bearing account would not be expected to earn interest in excess of $250 per year on Federal cash balances.

(3) The depository would require an average or minimum balance so high that it would not be feasible within the expected Federal and non-Federal cash resources.

(l) Interest earned on Federal advances deposited in interest-bearing accounts in excess of $250 per year shall be remitted annually to Department of Health and Human Services (DHHS), Payment Management System, Rockville, MD 20852. Interest amounts up to $250 per year may be retained by the recipient for administrative expense. In accordance with 31 CFR part 206, interest should be remitted electronically through the Automated Clearing House (ACT) to DHHS. Recipients without this capability may make the remittance by check. In either case, the remittance should be payable to DHHS and should indicate the recipient's Entity Identification Number (EIN) and reason, *i.e.*, ''Interest earned.''

(m) Except as noted elsewhere in this subpart, only the following forms shall be authorized for the recipients in requesting advances and reimbursements. Federal agencies shall not require more than an original and two copies of these forms.

(1) SF–270, Request for Advance or Reimbursement. [Reserved. Not used by NASA.]

(2) SF–271, Outlay Report and Request for Reimbursement for Construction Programs. The SF–271 may be used for requesting reimbursement for NASA construction programs.

§ 1260.123 Cost sharing or matching.

(a) All contributions, including cash and third party in-kind, shall be accepted as part of the recipient's cost sharing or matching when such contributions meet all of the following criteria.

(1) Are verifiable from the recipient's records.

(2) Are not included as contributions for any other federally-assisted project or program.

(3) Are necessary and reasonable for proper and efficient accomplishment of project or program objectives.

(4) Are allowable under the applicable cost principles.

(5) Are not paid by the Federal Government under another award, except where authorized by Federal statute to be used for cost sharing or matching.

(6) Are provided for in the approved budget when required by NASA.

(7) Conform to other provisions of this subpart, as applicable.

(b) Unrecovered indirect costs may be included as part of cost sharing or matching only with the prior approval of the cognizant NASA grant officer.

(c) Values for recipient contributions of services and property shall be established in accordance with the applicable cost principles. If NASA authorizes recipients to donate buildings or land for construction/facilities acquisition projects or long-term use, the value of the donated property for cost sharing or matching shall be the lesser of paragraph (c)(1) or (2) of this section.

(1) The certified value of the remaining life of the property recorded in the recipient's accounting records at the time of donation.

(2) The current fair market value. However, when there is sufficient justification, NASA may approve the use of the current fair market value of the donated property, even if it exceeds the certified value at the time of donation to the project.

(d) Volunteer services furnished by professional and technical personnel, consultants, and other skilled and

unskilled labor may be counted as cost sharing or matching if the service is an integral and necessary part of an approved project or program. Rates for volunteer services shall be consistent with those paid for similar work in the recipient's organization. In those instances in which the required skills are not found in the recipient organization, rates shall be consistent with those paid for similar work in the labor market in which the recipient competes for the kind of services involved. In either case, paid fringe benefits that are reasonable, allowable, and allocable may be included in the valuation.

(e) When an employer other than the recipient furnishes the services of an employee, these services shall be valued at the employee's regular rate of pay (plus an amount of fringe benefits that are reasonable, allowable, and allocable, but exclusive of overhead costs), provided these services are in the same skill for which the employee is normally paid.

(f) Donated supplies may include such items as expendable equipment, office supplies, laboratory supplies or workshop and classroom supplies. Value assessed to donated supplies included in the cost sharing or matching share shall be reasonable and shall not exceed the fair market value of the property at the time of the donation.

(g) The method used for determining cost sharing or matching for donated equipment, buildings and land for which title passes to the recipient may differ according to the purpose of the award, if the conditions in paragraph (g)(1) or (2) of this section apply.

(1) If the purpose of the award is to assist the recipient in the acquisition of equipment, buildings or land, the total value of the donated property may be claimed as cost sharing or matching.

(2) If the purpose of the award is to support activities that require the use of equipment, buildings or land, normally only depreciation or use charges for equipment and buildings may be made. However, the full value of equipment or other capital assets and fair rental charges for land may be allowed, provided that NASA has approved the charges.

(h) The value of donated property shall be determined in accordance with the usual accounting policies of the recipient, with the following qualifications:

(1) The value of donated land and buildings shall not exceed its fair market value at the time of donation to the recipient as established by an independent appraiser (*e.g.,* certified real property appraiser or General Services Administration representative) and certified by a responsible official of the recipient.

(2) The value of donated equipment shall not exceed the fair market value of equipment of the same age and condition at the time of donation.

(3) The value of donated space shall not exceed the fair rental value of comparable space as established by an independent appraisal of comparable space and facilities in a privately-owned building in the same locality.

(4) The value of loaned equipment shall not exceed its fair rental value.

(5) The following requirements pertain to the recipient's supporting records for in-kind contributions from third parties.

(i) Volunteer services shall be documented and, to the extent feasible, supported by the same methods used by the recipient for its own employees.

(ii) The basis for determining the valuation for personal service, material, equipment, buildings and land shall be documented.

§ 1260.124 Program income.

(a) The standards set forth in this section shall be used to account for program income related to projects financed in whole or in part with Federal funds.

(b) Program income earned during the project period shall be retained by the recipient and added to funds committed to the project by NASA and the recipient, and used to further eligible project or program objectives, unless NASA indicates in the terms and conditions of the award another alternative to account for program income or the recipient is subject to special award conditions, as indicated in § 1260.114.

(c) Unless program regulations or the terms and conditions of the award provide otherwise, recipients shall have no obligation to the Federal Government regarding program income earned after the end of the project period.

(d) Unless program regulations or the terms and conditions of the award provide otherwise, costs incident to the generation of program income may be deducted from gross income to determine program income, provided these costs have not been charged to the award.

(e) Proceeds from the sale of property shall be handled in accordance with the requirements of the Property Standards (See §§ 1260.130 through 1260.137).

(f) Unless program regulations or the terms and condition of the award provide otherwise, recipients shall have no obligation to the Federal Government with respect to program income earned from license fees and royalties for copyrighted material, patents, patent applications, trademarks, and inventions produced under an award. However, Patent and Trademark Amendments (35 U.S.C. 18) apply to inventions made under an experimental, developmental, or research award.

§ 1260.125 Revision of budget and program plans.

(a) The budget plan is the financial expression of the project or program as approved during the award process. It may include either the Federal and non-Federal share, or only the Federal share, depending upon requirements in the regulations in this subpart. It shall be related to performance for program evaluation purposes whenever appropriate.

(b) Recipients are required to report deviations from budget and program plans, and request prior approvals for budget and program plan revisions, in accordance with this section.

(c) For nonconstruction awards, recipients shall request prior approvals from NASA for the following program or budget related reasons, except the item in paragraph (c)(5) of this section, which is waived by NASA.

(1) Change in the scope or the objective of the project or program (even if there is no associated budget revision requiring prior written approval).

(2) Change in a key person specified in the application or award document.

(3) The absence for more than three months, or a 25 percent reduction in time devoted to the project, by the approved project director or principal investigator.

(4) The need for additional Federal funding.

(5) The transfer of amounts budgeted for indirect costs to absorb increases in direct costs, or vice versa.

Notice: NASA waives prior approval of such revisions.

(6) The inclusion of costs that require prior approval in accordance with OMB Circular A–21, ''Cost Principles for Institutions of Higher Education''; OMB Circular A–122, ''Cost Principles for Non-Profit Organizations''; 45 CFR part 74 appendix E, ''Principles for Determining Costs Applicable to Research and Development under Grants and Contracts with Hospitals''; or 48 CFR part 31, ''Contract Cost Principles and Procedures,'' as applicable.

(7) The transfer of funds allotted for training allowances (direct payment to trainees) to other categories of expense.

(8) Unless described in the application and funded in the approved

awards, the subaward, transfer or contracting out of any work under an award. This provision does not apply to the purchase of supplies, material, equipment or general support services.

(d) No other prior approval requirements for specific items will be imposed unless a deviation has been approved by OMB.

(e) NASA has determined to waive the following cost-related and administrative prior written approvals otherwise required by OMB Circulars A–21, A–110 and A–122 to allow recipients to do the following:

(1) Incur pre-award costs 90 calendar days prior to award or more than 90 calendar days with the prior approval of NASA. All pre-award costs are incurred at the recipient's risk (*i.e.,* NASA is under no obligation to reimburse such costs if for any reason the recipient does not receive an award or if the award is less than anticipated and inadequate to cover such costs).

(2) Initiate a one-time extension of the expiration date of the award of up to 12 months unless one or more of the following conditions apply. For one-time extensions, the recipient must notify NASA in writing with the supporting reasons and revised expiration date at least 10 days before the expiration date specified in the award. This one-time extension may not be exercised merely for the purpose of using unobligated balances.

(i) The terms and conditions of award prohibit the extension.

(ii) The extension requires additional Federal funds.

(iii) The extension involves any change in the approved objectives or scope of the project.

(3) Unless directed otherwise by the grant officer, carry forward unobligated balances to subsequent funding periods.

(f) Program regulations may restrict the transfer of funds among direct cost categories or programs, functions and activities for awards in which NASA's share of the project exceeds $100,000 and the cumulative amount of such transfers exceeds or is expected to exceed 10 percent of the total budget as last approved by NASA. NASA will ensure that any such program regulation requirements are announced in program guidelines or are incorporated as special conditions in award documents. No program regulation shall permit a transfer that would cause any Federal appropriation or part thereof to be used for purposes other than those consistent with the original intent of the appropriation.

(g) All other changes to nonconstruction budgets, except for the changes described in paragraph (j) of this section, do not require prior approval.

(h) For construction awards, recipients shall request prior written approval promptly from NASA for budget revisions whenever the conditions in paragraphs (h) (1), (2) or (3) of this section apply.

(1) The revision results from changes in the scope or the objective of the project or program.

(2) The need arises for additional Federal funds to complete the project.

(3) A revision is desired which involves specific costs for which prior written approval requirements may be imposed consistent with applicable OMB cost principles listed in § 1260.127.

(i) No other prior approval requirements for specific items will be imposed unless a deviation has been approved by OMB.

(j) When NASA makes an award that provides support for both construction and nonconstruction work, NASA requires the recipient to request prior approval from NASA before making any fund or budget transfers between the two types of work supported.

(k) For both construction and nonconstruction awards, NASA requires recipients to notify NASA in writing promptly whenever the amount of Federal authorized funds is expected to exceed the needs of the recipient for the project period by more than $5,000 or five percent of the Federal award, whichever is greater. This notification shall not be required if an application for additional funding is submitted for a continuation award.

(l) When requesting approval for budget revisions, recipients shall use the budget forms that were used in the application unless NASA indicates a letter of request suffices.

(m) Within 30 calendar days from the date of receipt of the request for budget revisions, NASA shall review the request and notify the recipient whether the budget revisions have been approved. If the revision is still under consideration at the end of 30 calendar days, NASA shall inform the recipient in writing of the date when the recipient may expect the decision.

§ 1260.126 Non-Federal audits.

(a) Recipients and subrecipients that are institutions of higher education or other non-profit organizations (including hospitals) shall be subject to the audit requirements contained in the Single Audit Act Amendments of 1966 (31 U.S.C. 7501–7507) and revised OMB Circular A–133, ''Audits of States, Local Governments, and Other Non-Profit Institutions.''

(b) State and local governments shall be subject to the audit requirements contained in the Single Audit Act Amendments of 1966 (31 U.S.C. 7501–7507) and revised OMB Circular A–133, ''Audits of States, Local Governments, and Non-Profit Organizations.''

(c) For-profit hospitals not covered by the audit provisions of revised OMB Circular A–133 shall be subject to the audit requirements of NASA.

(d) Commercial organizations shall be subject to the audit requirements of NASA or the prime recipient as incorporated into the award document.

§ 1260.127 Allowable costs.

For each kind of recipient, there is a set of Federal principles for determining allowable costs. Allowability of costs shall be determined in accordance with the cost principles applicable to the entity incurring the costs. Thus, allowability of costs incurred by State, local or federally-recognized Indian tribal governments is determined in accordance with the provisions of OMB Circular A–87, ''Cost Principles for State and Local Governments.'' The allowability of costs incurred by non-profit organizations is determined in accordance with the provisions of OMB Circular A–122, ''Cost Principles for Non-Profit Organizations.'' The allowability of costs incurred by institutions of higher education is determined in accordance with the provisions of OMB Circular A–21, ''Cost Principles for Educational Institutions.'' The allowability of costs incurred by hospitals is determined in accordance with the provisions of appendix E of 45 CFR part 74, ''Principles for Determining Costs Applicable to Research and Development Under Grants and Contracts with Hospitals.'' The allowability of costs incurred by commercial organizations and those non-profit organizations listed in Attachment C to Circular A–122 is determined in accordance with the provisions of the Federal Acquisition Regulation (FAR) at 48 CFR part 31.

§ 1260.128 Period of availability of funds.

Where a funding period is specified, a recipient may charge to the grant only allowable costs resulting from obligations incurred during the funding period and any pre-award costs authorized by NASA.

Property Standards

§ 1260.130 Purpose of property standards.

Sections 1260.131 through 1260.137 set forth uniform standards governing management and disposition of property furnished by the Federal Government whose cost was charged to a project

supported by a Federal award. Recipients shall observe these standards under awards and NASA will not impose additional requirements, unless specifically required by Federal statute. The recipient may use its own property management standards and procedures provided it observes the provisions of §§ 1260.131 through 1260.137.

§ 1260.131 Insurance coverage.

Recipients shall, at a minimum, provide the equivalent insurance coverage for real property and equipment acquired with Federal funds as provided for property owned by the recipient. Federally-owned property need not be insured unless required by the terms and conditions of the award.

§ 1260.132 Real property.

Unless otherwise provided by statute, the requirements concerning the use and disposition of real property acquired in whole or in part under awards are as follows:

(a) Title to real property shall vest in the recipient subject to the condition that the recipient shall use the real property for the authorized purpose of the project as long as it is needed and shall not encumber the property without approval of NASA.

(b) The recipient shall obtain written approval by NASA for the use of real property in other federally-sponsored projects when the recipient determines that the property is no longer needed for the purpose of the original project. Use in other projects shall be limited to those under federally-sponsored projects (*i.e.,* awards) or programs that have purposes consistent with those authorized for support by NASA.

(c) When the real property is no longer needed as provided in paragraphs (a) and (b) of this section, the recipient shall request disposition instructions from NASA or its successor Federal awarding agency. NASA shall observe one or more of the following disposition instructions.

(1) The recipient may be permitted to retain title without further obligation to the Federal Government after it compensates the Federal Government for that percentage of the current fair market value of the property attributable to the Federal participation in the project.

(2) The recipient may be directed to sell the property under guidelines provided by NASA and pay the Federal Government for that percentage of the current fair market value of the property attributable to the Federal participation in the project (after deducting actual and reasonable selling and fix-up expenses, if any, from the sales proceeds). When the recipient is authorized or required to sell the property, proper sales procedures shall be established that provide for competition to the extent practicable and result in the highest possible return.

(3) The recipient may be directed to transfer title to the property to the Federal Government or to an eligible third party provided that, in such cases, the recipient shall be entitled to compensation for its attributable percentage of the current fair market value of the property.

§ 1260.133 Federally-owned and exempt property.

(a) *Federally-owned property.*

(1) Title to federally-owned property remains vested in the Federal Government. Recipients shall submit annually an inventory listing of federally-owned property in their custody to NASA. Upon completion of the award or when the property is no longer needed, the recipient shall report the property to NASA for further Federal agency utilization.

(2) If NASA has no further need for the property, it shall be declared excess and reported to the General Services Administration, unless NASA has statutory authority to dispose of the property by alternative methods (*e.g.,* the authority provided by the Federal Technology Transfer Act (15 U.S.C. 3710 (I)) to donate research equipment to educational and non-profit organizations in accordance with Executive Order 12821, ''Improving Mathematics and Science Education in Support of the National Education Goals.'') Appropriate instructions shall be issued to the recipient by NASA.

(b) *Exempt property.* Under the authority of the Childs Act, 31 U.S.C. 6301 to 6308, NASA has determined to vest title to property acquired with Federal funds in the recipient without further obligation to NASA, including reporting requirements.

§ 1260.134 Equipment.

(a) For grants and cooperative agreements for the purpose of research, NASA's policy is to vest title to property acquired with Federal funds in the recipient without further obligation to NASA, including reporting requirements, as set forth at § 1260.33(b). For grants and cooperative agreements for non-research purposes, and in the exceptional circumstance where a deviation is requested for a grant or cooperative agreement for research to not vest title in the recipient as exempt, equipment shall vest in the recipient subject to conditions of this section. These policies are not applicable to grants and cooperative agreements with commercial firms (see § 1260.74(b)(2) and § 1274.401.)

(b) The recipient shall not use equipment acquired with Federal funds to provide services to non-Federal outside organizations for a fee that is less than private companies charge for equivalent services, unless specifically authorized by Federal statute, for as long as the Federal Government retains an interest in the equipment.

(c) The recipient shall use the equipment in the project or program for which it was acquired as long as needed, whether or not the project or program continues to be supported by Federal funds and shall not encumber the property without approval of NASA. When no longer needed for the original project or program, the recipient shall use the equipment in connection with its other federally-sponsored activities, in the following order of priority:

(1) Activities sponsored by NASA, then

(2) Activities sponsored by other Federal agencies.

(d) During the time that equipment is used on the project or program for which it was acquired, the recipient shall make it available for use on other projects or programs if such other use will not interfere with the work on the project or program for which the equipment was originally acquired. First preference for such other use shall be given to other projects or programs sponsored by NASA; second preference shall be given to projects or programs sponsored by other Federal agencies. If the equipment is owned by the Federal Government, use on other activities not sponsored by the Federal Government shall be permissible if authorized by NASA. User charges shall be treated as program income.

(e) When acquiring replacement equipment, the recipient may use the equipment to be replaced as trade-in or sell the equipment and use the proceeds to offset the costs of the replacement equipment subject to the approval of NASA.

(f) The recipient's property management standards for equipment acquired with Federal funds and federally-owned equipment shall include all of the following:

(1) Equipment records shall be maintained accurately and shall include the following information.

(i) A description of the equipment.

(ii) Manufacturer's serial number, model number, Federal stock number, national stock number, or other identification number.

(iii) Source of the equipment, including the award number.

(iv) Whether title vests in the recipient or the Federal Government.

(v) Acquisition date (or date received, if the equipment was furnished by the Federal Government) and cost.

(vi) Information from which one can calculate the percentage of Federal participation in the cost of the equipment (not applicable to equipment furnished by the Federal Government).

(vii) Location and condition of the equipment and the date the information was reported.

(viii) Unit acquisition cost.

(ix) Ultimate disposition data, including date of disposal and sales price or the method used to determine current fair market value where a recipient compensates NASA for its share.

(2) Equipment owned by the Federal Government shall be identified to indicate Federal ownership.

(3) A physical inventory of equipment shall be taken and the results reconciled with the equipment records at least once every two years. Any differences between quantities determined by the physical inspection and those shown in the accounting records shall be investigated to determine the causes of the difference. The recipient shall, in connection with the inventory, verify the existence, current utilization, and continued need for the equipment.

(4) A control system shall be in effect to insure adequate safeguards to prevent loss, damage, or theft of the equipment. Any loss, damage, or theft of equipment shall be investigated and fully documented; if the equipment was owned by the Federal Government, the recipient shall promptly notify NASA.

(5) Adequate maintenance procedures shall be implemented to keep the equipment in good condition.

(6) Where the recipient is authorized or required to sell the equipment, proper sales procedures shall be established which provide for competition to the extent practicable and result in the highest possible return.

(g) When the recipient no longer needs the equipment, the equipment may be used for other activities in accordance with the following standards. For equipment with a current per unit fair market value of $5,000 or more, the recipient may retain the equipment for other uses provided that compensation is made to the original Federal awarding agency or its successor. The amount of compensation shall be computed by applying the percentage of Federal participation in the cost of the original project or program to the current fair market value of the equipment. If the recipient has no need for the equipment, the recipient shall request disposition instructions from NASA. NASA shall determine whether the equipment can be used to meet NASA's requirements. If no requirement exists within NASA, the availability of the equipment shall be reported to the General Services Administration by NASA to determine whether a requirement for the equipment exists in other Federal agencies. NASA shall issue instructions to the recipient no later than 120 calendar days after the recipient's request and the following procedures shall govern.

(1) If so instructed or if disposition instructions are not issued within 120 calendar days after the recipient's request, the recipient shall sell the equipment and reimburse NASA an amount computed by applying to the sales proceeds the percentage of Federal participation in the cost of the original project or program. However, the recipient shall be permitted to deduct and retain from the Federal share $500 or ten percent of the proceeds, whichever is less, for the recipient's selling and handling expenses.

(2) If the recipient is instructed to ship the equipment elsewhere, the recipient shall be reimbursed by the Federal Government by an amount which is computed by applying the percentage of the recipient's participation in the cost of the original project or program to the current fair market value of the equipment, plus any reasonable shipping or interim storage costs incurred.

(3) If the recipient is instructed to otherwise dispose of the equipment, the recipient shall be reimbursed by NASA for such costs incurred in its disposition.

(4) NASA may reserve the right to transfer the title to the Federal Government or to a third party named by NASA when such third party is otherwise eligible under existing statutes. Such transfer shall be subject to the following standards.

(i) The equipment shall be appropriately identified in the award or otherwise made known to the recipient in writing.

(ii) NASA shall issue disposition instructions within 120 calendar days after receipt of a final inventory. The final inventory shall list all equipment acquired with grant funds and federally-owned equipment. If NASA fails to issue disposition instructions within the 120 calendar day period, the recipient shall apply the standards of this section, as appropriate. When NASA exercises its right to take title, the equipment shall be subject to the provisions for federally-owned equipment.

§ 1260.135 Supplies and other expendable property.

(a) Title to supplies and other expendable property shall vest in the recipient upon acquisition. If there is a residual inventory of unused supplies exceeding $5,000 in total aggregate value upon termination or completion of the project or program and the supplies are not needed for any other federally-sponsored project or program, the recipient shall retain the supplies for use on non-Federal sponsored activities or sell them, but shall, in either case, compensate the Federal Government for its share. The amount of compensation shall be computed in the same manner as for equipment.

(b) The recipient shall not use supplies acquired with Federal funds to provide services to non-Federal outside organizations for a fee that is less than private companies charge for equivalent services, unless specifically authorized by Federal statute as long as the Federal Government retains an interest in the supplies.

§ 1260.136 Intangible property.

(a) The recipient may assert copyright in any work that is copyrightable and was created, or for which copyright ownership was purchased, under an award. NASA is granted a royalty-free, nonexclusive and irrevocable right to reproduce, publish, prepare derivative works or otherwise use the work for Federal purposes, and to authorize others to do so.

(b) Recipients are subject to applicable regulations governing patents and inventions, including government-wide regulations issued by the Department of Commerce at 37 CFR part 401, ''Rights to Inventions Made by Nonprofit Organizations and Small Business Firms Under Government Grants, Contracts and Cooperative Agreements.''

(c) NASA has the right to:

(1) Obtain, reproduce, publish, or otherwise use the data first produced under an award; and

(2) Authorize others to receive, reproduce, publish, or otherwise use such data for Federal purposes.

(d)(1) In addition, in response to a Freedom of Information Act (FOIA) request for research data relating to published research findings produced under an award that were used by the Federal Government in developing an agency action that has the force and effect of law, NASA shall request, and the recipient shall provide, within a reasonable time, the research data so that they can be made available to the public through the procedures established under the FOIA. If NASA

obtains the research data solely in response a FOIA request, NASA may charge the requester a reasonable fee equaling the full incremental cost of obtaining the research data. This fee should reflect costs incurred by NASA, the recipient, and applicable subrecipients. This fee is in addition to any fees the agency may assess under the FOIA (5 U.S.C. 552(a)(4)(A)).

(2) The following definitions apply for purposes of this paragraph (d):

(i) Research data is defined as the recorded factual material commonly accepted in the scientific community as necessary to validate research findings, but not any of the following: Preliminary analyses, drafts of scientific papers, plans for future research, peer reviews, or communications with colleagues. This ''recorded'' material excludes physical objects (*e.g.,* laboratory samples). Research data does not include:

(A) Trade secrets, commercial information, materials necessary to be held confidential by a researcher until they are published, or similar information which is protected under law; and

(B) Personnel and medical information and similar information the disclosure of which would constitute a clearly unwarranted invasion of personal privacy, such as information that could be used to identify a particular person in a research study.

(ii) Published is defined as either when:

(A) Research findings are published in a peer-reviewed scientific or technical journal; or

(B) A Federal agency publicly and officially cites the research findings in support of an agency action that has the force and effect of law.

(iii) Used by the Federal Government in developing an agency action that has the force and effect of law is defined as when an agency publicly and officially cites the research findings in support of an agency action that has the force and effect of law.

(e) Title to intangible property and debt instruments acquired under an award or subcontract vests upon acquisition in the recipient. The recipient shall use that property for the originally-authorized purpose, and the recipient shall not encumber the property without approval of NASA. When no longer needed for the originally authorized purpose, disposition of the intangible property shall occur in accordance with the provisions of § 1260.134(g).

(f) Due to the substantial involvement on the part of NASA under a cooperative agreement, intellectual property may be produced by Federal employees and NASA contractors tasked to perform NASA assigned activities. Title to intellectual property created under the cooperative agreement by NASA or its contractors will initially vest with the creating party. Certain rights may be exchanged with the recipient.

§ 1260.137 Property trust relationship.

Real property, equipment, intangible property and debt instruments that are acquired or improved with Federal funds shall be held in trust by the recipient as trustee for the beneficiaries of the project or program under which the property was acquired or improved. NASA may require recipients to record liens or other appropriate notices of record to indicate that personal or real property has been acquired or improved with Federal funds and that use and disposition conditions apply to the property.

Procurement Standards

§ 1260.140 Purpose of procurement standards.

Sections 1260.141 through 1260.148 set forth standards for use by recipients in establishing procedures for the procurement of supplies and other expendable property, equipment, real property and other services with Federal funds. These standards are furnished to ensure that such materials and services are obtained in an effective manner and in compliance with the provisions of applicable Federal statutes and executive orders. No additional procurement standards or requirements shall be imposed by NASA upon recipients, unless specifically required by Federal statute or executive order or approved in accordance with the deviation procedures of § 1260.6.

§ 1260.141 Recipient responsibilities.

The standards contained in this section do not relieve the recipient of the contractual responsibilities arising under its contract(s). The recipient is the responsible authority, without recourse to NASA, regarding the settlement and satisfaction of all contractual and administrative issues arising out of procurements entered into in support of an award or other agreement. This includes disputes, claims, protests of award, source evaluation or other matters of a contractual nature. Matters concerning violation of statute are to be referred to such Federal, State or local authority as may have proper jurisdiction.

§ 1260.142 Codes of conduct.

The recipient shall maintain written standards of conduct governing the performance of its employees engaged in the award and administration of contracts. No employee, officer, or agent shall participate in the selection, award, or administration of a contract supported by Federal funds if a real or apparent conflict of interest would be involved. Such a conflict would arise when the employee, officer, or agent, any member of his or her immediate family, his or her partner, or an organization which employs or is about to employ any of the parties indicated herein, has a financial or other interest in the firm selected for an award. The officers, employees, and agents of the recipient shall neither solicit nor accept gratuities, favors, or anything of monetary value from contractors, or parties to subagreements. However, recipients may set standards for situations in which the financial interest is not substantial or the gift is an unsolicited item of nominal value. The standards of conduct shall provide for disciplinary actions to be applied for violations of such standards by officers, employees, or agents of the recipient.

§ 1260.143 Competition.

All procurement transactions shall be conducted in a manner to provide, to the maximum extent practical, open and free competition. The recipient shall be alert to organizational conflicts of interest as well as noncompetitive practices among contractors that may restrict or eliminate competition or otherwise restrain trade. In order to ensure objective contractor performance and eliminate unfair competitive advantage, contractors that develop or draft specifications, requirements, statements of work, invitations for bids and/or requests for proposals shall be excluded from competing for such procurements. Awards shall be made to the bidder or offeror whose bid or offer is responsive to the solicitation and is most advantageous to the recipient, price, quality and other factors considered. Solicitations shall clearly set forth all requirements that the bidder or offeror shall fulfill in order for the bid or offer to be evaluated by the recipient. Any and all bids or offers may be rejected when it is in the recipient's interest to do so.

§ 1260.144 Procurement procedures.

(a) All recipients shall establish written procurement procedures. These procedures shall provide for, at a minimum, that the conditions in paragraphs (a)(1), (2) and (3) of this section apply.

(1) Recipients avoid purchasing unnecessary items.

(2) Where appropriate, an analysis is made of lease and purchase alternatives to determine which would be the most economical and practical procurement for the Federal Government.

(3) Solicitations for goods and services provide for all of the following:

(i) A clear and accurate description of the technical requirements for the material, product or service to be procured. In competitive procurements, such a description shall not contain features which unduly restrict competition.

(ii) Requirements which the bidder/offeror must fulfill and all other factors to be used in evaluating bids or proposals.

(iii) A description, whenever practicable, of technical requirements in terms of functions to be performed or performance required, including the range of acceptable characteristics or minimum acceptable standards.

(iv) The specific features of ''brand name or equal'' descriptions that bidders are required to meet when such items are included in the solicitation.

(v) The acceptance, to the extent practicable and economically feasible, of products and services dimensioned in the metric system of measurement.

(vi) Preference, to the extent practicable and economically feasible, for products and services that conserve natural resources and protect the environment and are energy efficient.

(b) Positive efforts shall be made by recipients to utilize small businesses, minority-owned firms, and women's business enterprises, whenever possible. Recipients of NASA awards shall take all of the following steps to further this goal.

(1) Ensure that small businesses, minority-owned firms, and women's business enterprises are used to the fullest extent practicable.

(2) Make information on forthcoming opportunities available and arrange time frames for purchases and contracts to encourage and facilitate participation by small businesses, minority-owned firms, and women's business enterprises.

(3) Consider in the contract process whether firms competing for larger contracts intend to subcontract with small businesses, minority-owned firms, and women's business enterprises.

(4) Encourage contracting with consortiums of small businesses, minority-owned firms and women's business enterprises when a contract is too large for one of these firms to handle individually.

(5) Use the services and assistance, as appropriate, of such organizations as the Small Business Administration and the Department of Commerce's Minority Business Development Agency in the solicitation and utilization of small businesses, minority-owned firms and women's business enterprises.

(c) The type of procuring instruments used (*e.g.,* fixed price contracts, cost reimbursable contracts, purchase orders, and incentive contracts) shall be determined by the recipient but shall be appropriate for the particular procurement and for promoting the best interest of the program or project involved. The ''cost-plus-a-percentage-of-cost'' or ''percentage of construction cost'' methods of contracting shall not be used.

(d) Contracts shall be made only with responsible contractors who possess the potential ability to perform successfully under the terms and conditions of the proposed procurement. Consideration shall be given to such matters as contractor integrity, record of past performance, financial and technical resources or accessibility to other necessary resources. In certain circumstances, contracts with certain parties are restricted by 14 CFR part 1265, the implementation of Executive Orders 12549 and 12689, ''Debarment and Suspension.''

(e) Recipients shall, on request, make available for NASA, pre-award review and procurement documents, such as request for proposals or invitations for bids, independent cost estimates, etc., when any of the following conditions apply.

(1) A recipient's procurement procedures or operation fails to comply with the procurement standards in NASA's implementation of this subpart.

(2) The procurement is expected to exceed the small purchase threshold and is to be awarded without competition or only one bid or offer is received in response to a solicitation.

(3) The procurement, which is expected to exceed the small purchase threshold, specifies a ''brand name'' product.

(4) The proposed award over the small purchase threshold is to be awarded to other than the apparent low bidder under a sealed bid procurement.

(5) A proposed contract modification changes the scope of a contract or increases the contract amount by more than the amount of the small purchase threshold.

§ 1260.145 Cost and price analysis.

Some form of cost or price analysis shall be made and documented in the procurement files in connection with every procurement action. Price analysis may be accomplished in various ways, including the comparison of price quotations submitted, market prices and similar indicia, together with discounts. Cost analysis is the review and evaluation of each element of cost to determine reasonableness, allocability and allowability.

§ 1260.146 Procurement records.

Procurement records and files for purchases in excess of the small purchase threshold shall include the following at a minimum:

(a) Basis for contractor selection,

(b) Justification for lack of competition when competitive bids or offers are not obtained, and

(c) Basis for award cost or price.

§ 1260.147 Contract administration.

A system for contract administration shall be maintained to ensure contractor conformance with the terms, conditions and specifications of the contract and to ensure adequate and timely follow up of all purchases. Recipients shall evaluate contractor performance and document, as appropriate, whether contractors have met the terms, conditions and specifications of the contract.

§ 1260.148 Contract provisions.

The recipient shall include, in addition to provisions to define a sound and complete agreement, the following provisions in all contracts. The following provisions shall also be applied to subcontracts.

(a) Contracts in excess of the small purchase threshold shall contain contractual provisions or conditions that allow for administrative, contractual, or legal remedies in instances in which a contractor violates or breaches the contract terms, and provide for such remedial actions as may be appropriate.

(b) All contracts in excess of the small purchase threshold shall contain suitable provisions for termination by the recipient, including the manner by which termination shall be effected and the basis for settlement. In addition, such contracts shall describe conditions under which the contract may be terminated for default as well as conditions where the contract may be terminated because of circumstances beyond the control of the contractor.

(c) Except as otherwise required by statute, an award that requires the contracting (or subcontracting) for construction or facility improvements shall provide for the recipient to follow its own requirements relating to bid guarantees, performance bonds, and payment bonds unless the construction contract or subcontract exceeds $100,000. For those contracts or

subcontracts exceeding $100,000, NASA may accept the bonding policy and requirements of the recipient, provided the NASA has made a determination that the Federal Government's interest is adequately protected. If such a determination has not been made, the minimum requirements shall be as follows.

(1) A bid guarantee from each bidder equivalent to five percent of the bid price. The ''bid guarantee'' shall consist of a firm commitment such as a bid bond, certified check, or other negotiable instrument accompanying a bid as assurance that the bidder shall, upon acceptance of his bid, execute such contractual documents as may be required within the time specified.

(2) A performance bond on the part of the contractor for 100 percent of the contract price. A ''performance bond'' is one executed in connection with a contract to secure fulfillment of all the contractor's obligations under such contract.

(3) A payment bond on the part of the contractor for 100 percent of the contract price. A ''payment bond'' is one executed in connection with a contract to assure payment as required by statute of all persons supplying labor and material in the execution of the work provided for in the contract.

(4) Where bonds are required in the situations described in this section, the bonds shall be obtained from companies holding certificates of authority as acceptable sureties pursuant to 31 CFR part 223, ''Surety Companies Doing Business with the United States.''

(d) All negotiated contracts (except those for less than the small purchase threshold) awarded by recipients shall include a provision to the effect that the recipient, NASA, the Comptroller General of the United States, or any of their duly authorized representatives, shall have access to any books, documents, papers and records of the contractor which are directly pertinent to a specific program for the purpose of making audits, examinations, excerpts and transcriptions.

(e) All contracts, including small purchases, awarded by recipients and their contractors shall contain the procurement provisions of appendix A to this subpart, as applicable.

Reports and Records

§ 1260.150 Purpose of reports and records.

Sections 1260.151 through 1260.153 set forth the procedures for monitoring and reporting on the recipient's financial and program performance and the necessary standard reporting forms. They also set forth record retention requirements.

§ 1260.151 Monitoring and reporting program performance.

(a) Recipients are responsible for managing and monitoring each project, program, subcontract, function or activity supported by the award. Recipients shall monitor subcontracts to ensure subcontractors have met the audit requirements as delineated in § 1260.126.

(b) The terms and conditions of the award shall prescribe the frequency with which the performance reports shall be submitted. Except as provided in 1260.151(f), performance reports shall not be required more frequently than quarterly or, less frequently than annually. Annual reports shall be due 90 calendar days after the grant year; quarterly or semi-annual reports shall be due 30 days after the reporting period. NASA may require annual reports before the anniversary dates of multiple year awards in lieu of these requirements. The final performance reports are due 90 calendar days after the expiration or termination of the award.

(c) If inappropriate, a final technical or performance report shall not be required after completion of the project.

(d) When required, performance reports shall generally contain, for each award, brief information on each of the following.

(1) A comparison of actual accomplishments with the goals and objectives established for the period, the findings of the investigator, or both. Whenever appropriate and the output of programs or projects can be readily quantified, such quantitative data should be related to cost data for computation of unit costs.

(2) Reasons why established goals were not met, if appropriate.

(3) Other pertinent information including, when appropriate, analysis and explanation of cost overruns or high unit costs.

(e) Recipients shall not be required to submit more than the original and two copies of performance reports.

(f) Recipients shall immediately notify NASA of developments that have a significant impact on the award-supported activities. Also, notification shall be given in the case of problems, delays, or adverse conditions which materially impair the ability to meet the objectives of the award. This notification shall include a statement of the action taken or contemplated, and any assistance needed to resolve the situation.

(g) NASA may make site visits, as needed.

(h) NASA shall comply with clearance requirements of 5 CFR part 1320 when requesting performance data from recipients.

§ 1260.152 Financial reporting.

(a) When funds are advanced to recipients, each recipient is required to submit the SF 272, Report of Federal Cash Transactions, and, when necessary, its continuation sheet, SF 272a. NASA uses this report to monitor cash advanced to the recipient and obtain disbursement information for each agreement with the recipient.

(b) NASA requires forecasts of the recipient's cash requirements for each of the four months following the quarter being reported, in the ''Remarks'' section of the report. There will be a phase-in term for NASA adoption of an automated 272 system not requiring the forecast estimates. It is anticipated that this forecast requirement will be deleted no later than October 1, 2001.

(c) Recipients are required to submit the original of the report to the Financial Management Office of the NASA Center which issued the agreement 15 working days following the end of each Federal fiscal quarter. Copies will be furnished to the appropriate grant officer.

§ 1260.153 Retention and access requirements for records.

(a) This section sets forth requirements for record retention and access to records for awards to recipients. NASA shall not impose any other record retention or access requirements upon recipients.

(b) Financial records, supporting documents, statistical records, and all other records pertinent to an award shall be retained for a period of three years from the date of submission of the final expenditure report or, for awards that are renewed quarterly or annually, from the date of the submission of the quarterly or annual financial report, as authorized by NASA. The only exceptions are the following.

(1) If any litigation, claim, or audit is started before the expiration of the three-year period, the records shall be retained until all litigation, claims or audit findings involving the records have been resolved and final action taken.

(2) Records for real property and equipment acquired with Federal funds shall be retained for 3 years after final disposition.

(3) When records are transferred to or maintained by NASA, the 3-year retention requirement is not applicable to the recipient

(4) Indirect cost rate proposals, cost allocations plans, etc. as specified in § 1260.153(g).

(c) NASA authorizes that copies of original records may be substituted for the original records.

(d) NASA shall request transfer of certain records to its custody from recipients when it determines that the records possess long term retention value. However, in order to avoid duplicate record keeping, NASA may make arrangements for recipients to retain any records that are continuously needed for joint use.

(e) NASA, the Inspector General, Comptroller General of the United States, or any of their duly authorized representatives, have the right of timely and unrestricted access to any books, documents, papers, or other records of recipients that are pertinent to the awards, in order to make audits, examinations, excerpts, transcripts and copies of such documents. This right also includes timely and reasonable access to a recipient's personnel for the purpose of interview and discussion related to such documents. The rights of access in this paragraph are not limited to the required retention period, but shall last as long as records are retained.

(f) Unless required by statute, NASA shall place no restrictions on recipients that limit public access to the records of recipients that are pertinent to an award, except when NASA can demonstrate that such records shall be kept confidential and would have been exempted from disclosure pursuant to the Freedom of Information Act (5 U.S.C. 552) if the records had belonged to NASA.

(g) Indirect cost rate proposals, cost allocations plans, etc. Paragraphs (g)(1) and (g)(2) of this section apply to the following types of documents, and their supporting records: Indirect cost rate computations or proposals, cost allocation plans, and any similar accounting computations of the rate at which a particular group of costs is chargeable (such as computer usage chargeback rates or composite fringe benefit rates).

(1) *If submitted for negotiation.* If the recipient submits to NASA or the subrecipient submits to the recipient the proposal, plan, or other computation to form the basis for negotiation of the rate, then the 3-year retention period for its supporting records starts on the date of such submission.

(2) *If not submitted for negotiation.* If the recipient is not required to submit to NASA or the subrecipient is not required to submit to the recipient the proposal, plan, or other computation for negotiation purposes, then the 3-year retention period for the proposal, plan, or other computation and its supporting records starts at the end of the fiscal year (or other accounting period) covered by the proposal, plan, or other computation.

Termination and Enforcement

§ 1260.160 Purpose of termination and enforcement.

Sections 1260.61 and 1260.62 set forth uniform suspension, termination and enforcement procedures.

§ 1260.161 Termination.

(a) Awards may be terminated in whole or in part only if the conditions in paragraph (a)(1), (2) or (3) of this section apply.

(1) By NASA, if a recipient materially fails to comply with the terms and conditions of an award.

(2) By NASA with the consent of the recipient, in which case the two parties shall agree upon the termination conditions, including the effective date and, in the case of partial termination, the portion to be terminated.

(3) By the recipient upon sending to NASA written notification setting forth the reasons for such termination, the effective date, and, in the case of partial termination, the portion to be terminated.

However, if NASA determines in the case of partial termination that the reduced or modified portion of the grant will not accomplish the purposes for which the grant was made, it may terminate the grant in its entirety under either paragraphs (a)(1) or (2) of this section.

(b) If costs are allowed under an award, the responsibilities of the recipient referred to in § 1260.171(a), including those for property management as applicable, shall be considered in the termination of the award, and provision shall be made for continuing responsibilities of the recipient after termination, as appropriate.

§ 1260.162 Enforcement.

(a) *Remedies for noncompliance.* If a recipient materially fails to comply with the terms and conditions of an award, whether stated in a Federal statute, regulation, assurance, application, or notice of award, NASA may, in addition to imposing any of the special conditions outlined in § 1260.114, take one or more of the following actions, as appropriate in the circumstances.

(1) Temporarily withhold cash payments pending correction of the deficiency by the recipient or more severe enforcement action by NASA.

(2) Disallow (that is, deny both use of funds and any applicable matching credit for) all or part of the cost of the activity or action not in compliance.

(3) Wholly or partly suspend or terminate the current award.

(4) Withhold further awards.

(5) Take other remedies that may be legally available.

(b) Hearings and appeals. In taking an enforcement action, NASA shall provide the recipient an opportunity for hearing, appeal, or other administrative proceeding to which the recipient is entitled under any statute or regulation applicable to the action involved.

(c) *Effects of suspension and termination.* Costs of a recipient resulting from obligations incurred by the recipient during a suspension or after termination of an award are not allowable unless NASA expressly authorizes them in the notice of suspension or termination or subsequently. Other recipient costs during suspension or after termination which are necessary and not reasonably avoidable are allowable if the conditions in paragraph (c)(1) and (2) of this section apply.

(1) The costs result from obligations which were properly incurred by the recipient before the effective date of suspension or termination, are not in anticipation of it, and in the case of a termination, are noncancellable.

(2) The costs would be allowable if the award were not suspended or expired normally at the end of the funding period in which the termination takes effect.

(d) *Relationship to debarment and suspension.* The enforcement remedies identified in this section, including suspension and termination, do not preclude a recipient from being subject to debarment and suspension under Executive Orders 12549 and 12689 and 14 CFR part 1265 (see § 1260.113).

After the Award Requirements

§ 1260.170 Purpose.

Sections 1260.171 through 1260.173 contain closeout procedures and other procedures for subsequent disallowances and adjustments.

§ 1260.171 Closeout procedures.

(a) Recipients shall submit, within 90 calendar days after the date of completion of the award, all financial, performance, and other reports as required by the terms and conditions of the award. NASA may approve extensions when requested by the recipient.

(b) Unless NASA authorizes an extension, a recipient shall liquidate all obligations incurred under the award

not later than 90 calendar days after the funding period or the date of completion as specified in the terms and conditions of the award or in agency implementing instructions.

(c) NASA shall make prompt payments to a recipient for allowable reimbursable costs under the award being closed out.

(d) The recipient shall promptly refund any balances of unobligated cash that NASA has advanced or paid and that is not authorized to be retained by the recipient for use in other projects. OMB Circular A–129 governs unreturned amounts that become delinquent debts.

(e) When authorized by the terms and conditions of the award, NASA shall make a settlement for any upward or downward adjustments to the Federal share of costs after closeout reports are received.

(f) The recipient shall account for any real and personal property acquired with Federal funds or received from the Federal Government in accordance with §§ 1260.131 through 1260.137.

(g) In the event a final audit has not been performed prior to the closeout of an award, NASA shall retain the right to recover an appropriate amount after fully considering the recommendations on disallowed costs resulting from the final audit.

§ 1260.172 Subsequent adjustments and continuing responsibilities.

(a) The closeout of an award does not affect any of the following.

(1) The right of NASA to disallow costs and recover funds on the basis of a later audit or other review.

(2) The obligation of the recipient to return any funds due as a result of later refunds, corrections, or other transactions.

(3) Audit requirements in § 1260.126.

(4) Property management requirements in §§ 1260.131 through 1260.137.

(5) Records retention as required in § 1260.153.

(b) After closeout of an award, a relationship created under an award may be modified or ended in whole or in part with the consent of the NASA and the recipient, provided the responsibilities of the recipient referred to in § 1260.173(a), including those for property management as applicable, are considered and provisions made for continuing responsibilities of the recipient, as appropriate.

§ 1260.173 Collection of amounts due.

(a) Any funds paid to a recipient in excess of the amount to which the recipient is finally determined to be entitled under the terms and conditions of the award constitute a debt to the Federal Government. If not paid within a reasonable period after the demand for payment, NASA may reduce the debt by the provisions of paragraph (a)(1), (2) or (3) of this section

(1) Making an administrative offset against other requests for reimbursements.

(2) Withholding advance payments otherwise due to the recipient.

(3) Taking other action permitted by statute.

(b) Except as otherwise provided by law, NASA shall charge interest on an overdue debt in accordance with 4 CFR chapter II, ''Federal Claims Collection Standards.''

Appendix A to Subpart B of Part 1260—Contract Provisions

All contracts awarded by a recipient, including small purchases, shall contain the following provisions as applicable:

1. *Equal Employment Opportunity.* All contracts shall contain a provision requiring compliance with Executive Order 11246, ''Equal Employment Opportunity,'' as amended by Executive Order 11375, ''Amending Executive Order 11246 Relating to Equal Employment Opportunity,'' and as supplemented by regulations at 41 CFR part 60, ''Office of Federal Contract Compliance Programs, Equal Employment Opportunity, Department of Labor.''

2. *Copeland ''Anti-Kickback'' Act (18 U.S.C. 874 and 40 U.S.C. 276c).* All contracts in excess of $2,000 for construction or repair awarded by recipients shall include a provision for compliance with the Copeland ''Anti-Kickback'' Act (18 U.S.C. 874), as supplemented by Department of Labor regulations (29 CFR part 3, ''Contractors and Subcontractors on Public Building or Public Work Financed in Whole or in Part by Loans or Grants from the United States''). The Act provides that each contractor shall be prohibited from inducing, by any means, any person employed in the construction, completion, or repair of public work, to give up any part of the compensation to which he is otherwise entitled. The recipient shall report all suspected or reported violations to NASA.

3. *Davis-Bacon Act, as amended (40 U.S.C. 276a to a–7).* When required by Federal program legislation, all construction contracts awarded by the recipients of more than $2,000 shall include a provision for compliance with the Davis-Bacon Act (40 U.S.C. 276a to a–7) and as supplemented by Department of Labor regulations (29 CFR part 5, ''Labor Standards Provisions Applicable to Contracts Governing Federally Financed and Assisted Construction''). Under this Act, contractors shall be required to pay wages to laborers and mechanics at a rate not less than the minimum wages specified in a wage determination made by the Secretary of Labor. In addition, contractors shall be required to pay wages not less than once a week. The recipient shall place a copy of the current prevailing wage determination issued by the Department of Labor in each solicitation and the award of a contract shall be conditioned upon the acceptance of the wage determination. The recipient shall report all suspected or reported violations to the NASA.

4. *Contract Work Hours and Safety Standards Act (40 U.S.C. 327–333).* Where applicable, all contracts awarded by recipients in excess of $2,000 for construction contracts and in excess of $2,500 for other contracts that involve the employment of mechanics or laborers shall include a provision for compliance with sections 102 and 107 of the Contract Work Hours and Safety Standards Act (40 U.S.C. 327–333), as supplemented by Department of Labor regulations (29 CFR part 5). Under subsection 102 of the Act, each contractor shall be required to compute the wages of every mechanic and laborer on the basis of a standard work week of 40 hours. Work in excess of the standard work week is permissible provided that the worker is compensated at a rate of not less than 1½ times the basic rate of pay for all hours worked in excess of 40 hours in the work week. Section 107 of the Act is applicable to construction work and provides that no laborer or mechanic shall be required to work in surroundings or under working conditions which are unsanitary, hazardous or dangerous. These requirements do not apply to the purchases of supplies or materials or articles ordinarily available on the open market, or contracts for transportation or transmission of intelligence.

5. *Rights to Inventions Made Under a Contract or Agreement.* Contracts or agreements for the performance of experimental, developmental, or research work shall provide for the rights of the Federal Government and the recipient in any resulting invention in accordance with 37 CFR part 401, ''Rights to Inventions Made by Nonprofit Organizations and Small Business Firms Under Government Grants, Contracts and Cooperative Agreements,'' and any implementing regulations issued by the awarding agency.

6. *Clean Air Act (42 U.S.C. 7401 et seq.) and the Federal Water Pollution Control Act (33 U.S.C. 1251 et seq.), as amended.* Contracts of amounts in excess of $100,000 shall contain a provision that requires the recipient to agree to comply with all applicable standards, orders or regulations issued pursuant to the Clean Air Act (42 U.S.C. 7401 et seq.) and the Federal Water Pollution Control Act as amended (33 U.S.C. 1251 et seq.). Violations shall be reported to NASA and the Regional Office of the Environmental Protection Agency (EPA).

7. *Byrd Anti-Lobbying Amendment (31 U.S.C. 1352).* Contractors who apply or bid for an award of $100,000 or more shall file the required certification. Each tier certifies to the tier above that it will not and has not used Federal appropriated funds to pay any person or organization for influencing or attempting to influence an officer or employee of any agency, a member of Congress, officer or employee of Congress, or an employee of a member of Congress in connection with obtaining any Federal contract, grant or any other award covered by

31 U.S.C. 1352. Each tier shall also disclose any lobbying with non-Federal funds that takes place in connection with obtaining any Federal award. Such disclosures are forwarded from tier to tier up to the recipient.

8. *Debarment and Suspension (Executive Orders 12549 and 12689).* No contract shall be made to parties listed on the General Services Administration's List of Parties Excluded from Federal Procurement or Nonprocurement Programs in accordance with Executive Orders 12549 and 12689, ''Debarment and Suspension.'' This list contains the names of parties debarred, suspended, or otherwise excluded by agencies, and contractors declared ineligible under statutory or regulatory authority other than Executive Order 12549. Contractors with awards that exceed the small purchase threshold shall provide the required certification regarding its exclusion status and that of its principal employees.

2. Part 1274 is revised to read as follows:

PART 1274—COOPERATIVE AGREEMENTS WITH COMMERCIAL FIRMS

Subpart A—General

Sec.
1274.101 Purpose.
1274.102 Definitions.
1274.103 Effect on other issuances.
1274.104 Deviations.
1274.105 Approval of Cooperative Agreement Notices (CANs) and cooperative agreements.

Subpart B—Pre-Award Requirements

1274.201 Purpose.
1274.202 Solicitations and proposals.
1274.203 Intellectual property.
1274.204 Evaluation and selection.
1274.205 Award procedures.
1274.206 Document format and numbering.
1274.207 Distribution of cooperative agreements.

Subpart C—Administration

1274.301 Delegation of administration.

1274.302 Transfers, novations, and change of name agreements.

Subpart D—Government Property

1274.401 Government property.

Subpart E—Procurement Standards

1274.501 Subcontracts.

Subpart F—Reports and Records

1274.601 Retention and access requirements for records.

Subpart G—Suspension or Termination

1274.701 Suspension or termination.

Subpart H—After-the-Award Requirements

1274.801 Purpose.
1274.802 Closeout procedures.
1274.803 Subsequent adjustments and continuing responsibilities.

Subpart I—Provisions and Special Conditions

1274.901 Other provisions and special conditions.
1274.902 Purpose.
1274.903 Responsibilities.
1274.904 Resource sharing requirements.
1274.905 Rights in data.
1274.906 Designation of new technology representative and patent representative.
1274.907 Disputes.
1274.908 Milestone payments.
1274.909 Term of this agreement.
1274.910 Authority.
1274.911 Patent rights.
1274.912 Patent rights—retention by the Recipient (large business).
1274.913 Patent rights—retention by the Recipient (small business).
1274.914 Requests for waiver of rights—large business.
1274.915 Restrictions on sale or transfer of technology to foreign firms or institutions.
1274.916 Liability and risk of loss.
1274.917 Additional funds.
1274.918 Incremental funding.
1274.919 Cost principles and accounting standards.
1274.920 Responsibilities of the NASA Technical Officer.
1274.921 Publications and reports: Non-proprietary research results.
1274.922 Suspension or termination.
1274.923 Equipment and other property.
1274.924 Civil rights.
1274.925 Subcontracts.
1274.926 Clean Air-Water Pollution Control Acts.
1274.927 Debarment and suspension and Drug-Free Workplace.
1274.928 Foreign national employee investigative requirements.
1274.929 Restrictions on lobbying.
1274.930 Travel and transportation.
1274.931 Electronic funds transfer payment methods.
1274.932 Retention and examination of records.
1274.933 Summary of recipient reporting responsibilities.
1274.934 Safety.

Appendix to Part 1274—Listing of Exhibits

Exhibit A to Part 1274—Contract Provisions
Exhibit B to Part 1274—Reports

Authority: 31 U.S.C. 6301 to 6208; 42 U.S.C. 2451 *et seq.*

Subpart A—General

§ 1274.101 Purpose.

(a) This part establishes uniform administrative requirements for NASA cooperative agreements awarded to commercial firms. Cooperative agreements are ordinarily entered into with commercial firms to—

(1) Support research and development;

(2) Provide technology transfer from the Government to the recipient; or

(3) Develop a capability among U.S. firms to potentially enhance U.S. competitiveness.

(b) An award may not be made to a foreign government. Award to foreign firms is not precluded. The approval of the Associate Administrator for Procurement is required to exclude foreign firms from submitting proposals.

§ 1274.102 Definitions.

Administrator. The Administrator or Deputy Administrator of NASA.

Associate Administrator for Procurement. The head of the Office of Procurement, NASA Headquarters (Code H).

Cash contributions. The recipient's cash outlay, including the outlay of money contributed to the recipient by third parties.

Closeout. The process by which NASA determines that all applicable administrative actions and all required work of the award have been completed by the recipient and NASA.

Commercial item. The definition in FAR 2.101 is applicable.

Cooperative agreement. As defined by 31 U.S.C. 6305, cooperative agreements are financial assistance instruments used to stimulate or support activities for authorized purposes and in which the Government participates substantially in the performance of the effort. This part covers only cooperative agreements with commercial firms. Cooperative agreements with universities and non-profit organizations are covered by 14 CFR part 1260.

Cost sharing or matching. That portion of project or program costs not borne by the Federal Government except that the recipient's contribution may be reimbursable under other Government awards as allowable IR&D costs pursuant to 48 CFR (NFS) 1831.205–18.

Date of completion. The date on which all work under an award is completed or the date on the award document, or any supplement or amendment thereto, on which NASA sponsorship ends.

Days. Calendar days, unless otherwise indicated.

Government furnished equipment. Equipment in the possession of, or acquired directly by, the Government and subsequently delivered, or otherwise made available, to a recipient and equipment procured by the recipient with Government funds under a cooperative agreement.

Grant Officer. A Government employee who has been delegated the authority to negotiate, award, or administer grants or cooperative agreements. A Contracting Officer may serve as a Grant Officer if authorized by installation procurement regulations.

Incremental funding. A method of funding a cooperative agreement where the funds initially allotted to the cooperative agreement are less than the award amount. Additional funding is added as described in § 1274.918.

Recipient. An organization receiving financial assistance under a cooperative agreement to carry out a project or program. A recipient may be an individual firm, a consortium, a partnership, etc.

Resource contribution. The total value of resources provided by either party to the cooperative agreement including both cash and non-cash contributions.

Support contractor. A NASA contractor performing part or all of the NASA responsibilities under a cooperative agreement.

Suspension. An action by NASA or the recipient that temporarily discontinues efforts under an award, pending corrective action or pending a decision to terminate the award. Suspension of an award is a separate action from suspension under Federal agency regulations implementing Executive Orders 12549 and 12689, ''Debarment and Suspension.''

Technical officer. The official of the cognizant NASA office who is responsible for monitoring the technical aspects of the work under a cooperative agreement. A Contracting Officer's Technical Representative may serve as a Technical Officer.

Termination. The cancellation of a cooperative agreement in whole or in part, by either party at any time prior to the date of completion.

§ 1274.103 Effect on other issuances.

For awards subject to this subpart, the requirements of this subpart apply, except to the extent that any administrative requirements of codified program regulations, program manuals, handbooks and other nonregulatory materials are required by statute, or are authorized in accordance with the deviations provision in 1274.104.

§ 1274.104 Deviations.

(a) The Associate Administrator for Procurement may grant exceptions for classes of or individual cooperative agreements from the requirements of this part when exceptions are not prohibited by statute.

(b) A deviation is required for any of the following:

(1) When a prescribed provision set forth in this part for use verbatim is modified or omitted.

(2) When a provision is set forth in this part, but not prescribed for use verbatim, and the installation substitutes a provision which is inconsistent with the intent, principle, and substance of the prescribed provision.

(3) When a NASA form or other form is prescribed by this part, and that form is altered or another form is used in its place.

(4) When limitations, imposed by this part upon the use of a provision, form, procedure, or any other action, are not adhered to.

(c) Requests for authority to deviate from this part will be forwarded to Headquarters, Program Operations Division (Code HS). Such requests, signed by the Procurement Officer, shall contain as a minimum:

(1) A full description of the deviation and identification of the regulatory requirement from which a deviation is sought.

(2) Detailed rationale for the request, including any pertinent background information.

(3) The name of the recipient and identification of the cooperative agreement affected, including the dollar value.

(4) A statement as to whether the deviation has been requested previously, and, if so, circumstances of the previous request(s).

(5) A copy of legal counsel's concurrence or comments.

§ 1274.105 Approval of Cooperative Agreement Notices (CANs) and cooperative agreements.

(a) As soon as possible after the initial decision is made by a Headquarters program office or Center procurement personnel to use the CAN process, the cognizant program office or procurement office shall notify the Associate Administrator for Procurement (Code HS) of the intent to use a CAN in all cases where the total Government funds to be awarded in response to CAN proposals is expected to equal or exceed $10 million. All such notifications, as described in this section, shall be concurred in by the Procurement Officer. This requirement also applies in those cases where an unsolicited proposal is received and a decision is made to award a cooperative agreement in which the recipient (or one or more members of a ''team'' of recipients) is a commercial firm and the total Government funds are expected to equal or exceed $10 million.

(b) The required notification is to be accomplished by sending an electronic mail (e-mail) message to the following address at NASA Headquarters: can@hq.nasa.gov. The notification must include the following information, as a minimum:

(1) Identification of the cognizant center and program office,

(2) Description of the proposed program for which proposals are to be solicited,

(3) Rationale for decision to use a CAN rather than other types of solicitations,

(4) The amount of Government funding to be available for awards,

(5) Estimate of the number of cooperative agreements to be awarded as a result of the CAN,

(6) The percentage of cost-sharing to be required,

(7) Tentative schedule for release of CAN and award of cooperative agreements,

(8) If the term of the cooperative agreement is anticipated to exceed 3 years and/or if the Government cash contribution is expected to exceed $20M, address anticipated changes, if any, to the provisions (see 1274.202(f)), and

(9) If the cooperative agreement is for programs/projects that provide aerospace products or capabilities, (*i.e.,* provide space and aeronautics, flight and ground systems, technologies and operations), a statement that the requirements of NASA Policy Directive (NPD) 7120.4 and NASA Policy Guidance (NPG) 7120.5 have been met. This affirmative statement will include a specific reference to the signed Program Commitment Agreement.

(c) Code HS will respond by e-mail message to the sender, with a copy of the message to the Procurement Officer and the Office of Small and Disadvantaged Business Utilization, within 5 working days of receipt of this initial notification. The response will address the following:

(1) Whether Code HS agrees or disagrees with the appropriateness for using a CAN for the effort described,

(2) Whether Code HS will require review and approval of the CAN before its issuance,

(3) Whether Code HS will require review and approval of the selected offeror's cost sharing arrangement (*e.g.,* cost sharing percentage; type of contribution (cash, labor, etc.)), and

(4) Whether Code HS will require review and approval of the resulting cooperative agreement(s).

(d) If a response from Code HS is not received within 5 working days of notification, the program office or center may proceed with release of the CAN and award of the cooperative agreements as described.

Subpart B—Pre-Award Requirements

§ 1274.201 Purpose.

Sections 1274.202 through 1274.207 prescribe forms and instructions and address other pre-award matters.

§ 1274.202 Solicitations and proposals.

(a) *Competition.* Consistent with 31 U.S.C. 6301(3), NASA uses competitive procedures to award cooperative agreements whenever possible. An award will normally be made as a result of a Cooperative Agreement Notice (CAN) which envisions a cooperative agreement as the award instrument. A Commerce Business Daily synopsis or a synopsis on the NASA Acquisition Internet Service will be used to publicize the CAN.

(b) *Unsolicited proposals.* (1) An award may be made as a result of an unsolicited proposal. The unsolicited proposal must evidence a unique and innovative idea or approach which is not the subject of a current or anticipated solicitation. When a cooperative agreement is awarded as a result of an unsolicited proposal, a Commerce Business Daily synopsis and a synopsis on the NASA Acquisition Internet Service will be used to provide an opportunity for other firms/consortia to express an interest in the agreement unless the exception in 48 CFR (FAR) 5.202(a)(8) applies. Respondents should be given a minimum of thirty days to respond. If interest is expressed, a decision must be made to proceed with the award or to issue a solicitation for competitive proposals.

(2) Prior to an award made as the result of an unsolicited proposal, the award must be approved by the Procurement Officer if NASA's total resource contribution is below $5 million. Center Director approval is required if NASA's total resource contribution is $5 million or more. For Headquarters cooperative agreements, approval by the Associate Administrator for Procurement is required if NASA's total resource contribution is $5 million or more.

(c) *Cost and payment matters.* (1) The expenditure of Government funds by the recipient and the allowability of costs recognized as a resource contribution by the recipient shall be governed by the FAR cost principles, 48 CFR part 31. If the recipient is a consortium which includes non-commercial entities as members, cost allowability for those members will be determined as follows:

(i) Allowability of costs incurred by State, local or federally-recognized Indian tribal governments is determined in accordance with the provisions of OMB Circular A–87, ''Cost Principles for State and Local Governments.''

(ii) The allowability of costs incurred by non-profit organizations is determined in accordance with the provisions of OMB Circular A–122, ''Cost Principles for Non-Profit Organizations.''

(iii) The allowability of costs incurred by institutions of higher education is determined in accordance with the provisions of OMB Circular A–21, ''Cost Principles for Educational Institutions.''

(iv) The allowability of costs incurred by hospitals is determined in accordance with the provisions of Appendix E of 45 CFR part 74, ''Principles for Determining Costs Applicable to Research and Development Under Grants and Contracts with Hospitals.'' Recipient's method for accounting for the expenditure of funds must be consistent with Generally Accepted Accounting Principles.

(2) A substantial resource contribution on the part of the recipient is required. The recipient is expected to contribute at least 50 percent of the total resources required to accomplish the cooperative agreement. Recipient contributions may be either cash or non-cash or both. In those cases in which a contribution of less than 50 percent is anticipated from the recipient, approval of the Associate Administrator for Procurement (Code HS) is required prior to award. The request for approval should address the evaluation factor in the solicitation and how the proposal accomplishes those objectives to such a degree that a share ratio of less than 50 percent is warranted.

(3) Cooperative agreements are funded by NASA in a fixed amount. Payments in fixed amounts will be made by NASA in accordance with ''Milestone Billings'' which are discussed in paragraph (c)(4) of this section. If the recipient completes the final milestone, final payment is made, and NASA will have completed its financial responsibilities under the agreement. However, if the cooperative agreement is terminated prior to achievement of all milestones, NASA's funding will be limited to milestone payments already made plus NASA's share of costs required by the recipient to meet commitments which had in the judgment of NASA become firm prior to the effective date of termination and are otherwise appropriate. In no event shall these additional costs or payment exceed the amount of the next payable milestone billing amount.

(4) Milestone billings is the method of payment to the recipient under cooperative agreements. Performance based milestones are used as the basis of establishing a set of verifiable milestones for payment purposes. Each milestone payment shall be established so that the Government payment is at the same share ratio as the cooperative agreement share ratio. If the recipient is a consortium, the Articles of Collaboration is required to contain an extensive list of performance based milestones that the consortium has agreed to. Generally, payments should not be made more than once monthly; ideally, payments will be made about every 60 to 90 days but in all cases should be made on the basis of verifiable, significant events as opposed to the passage of time. The last payment milestone should be large enough to ensure that the recipient completes its responsibilities under the cooperative agreement (or funds should be reserved for payment until after completion of the cooperative agreement). The Government technical officer must verify completion of each milestone to the Grant Officer as part of the payment process.

(5) Cooperative agreements may be incrementally funded subject to the following:

(i) The total value of the NASA cash contribution is $50,000 or more.

(ii) The period of performance overlaps the succeeding fiscal year.

(iii) The funds are not available to fully fund the cooperative agreement at the time of award.

(6) Cost sharing requirements on cooperative agreements with commercial firms are based on section 23 of OMB Circular A–110. Only cash or certain non-cash resources are acceptable sources for the recipient contribution to a cooperative agreement. Acceptable non-cash resources include such items as purchased equipment, equipment, labor, office space, etc. The actual or imputed value of intellectual property such as patent rights, data rights, trade secrets, etc., are not acceptable as sources for the recipient contribution. The Government's cost share should fully reflect the total cost of the cash and non-cash contributions. With respect to the non-cash contribution, a fully burdened cost estimate of personnel, facilities, and other expenses should be utilized. It is recognized that this will be an estimate in some cases, but the cost principles in section 9091–5 of the NASA Financial Management Manual should be adhered to.

(7) Recipients shall not be paid a profit under cooperative agreements. Profit may be paid by the recipient to subcontractors, if the subcontractor is not part of the offering team and the subcontract is an arms-length relationship.

(8) The recipient's resource share of the cooperative agreement may be allocated as part of its IR&D program.

(9) The CAN must provide a description of the non-cash Government contribution (personnel, equipment,

facilities, etc.) as part of the Government's contribution to the cooperative agreement in addition to funding. The offeror may propose that additional non-cash Government resources be provided under two conditions. First, the offeror is responsible for verifying the availability of the resources and their suitability for their intended purpose and, second, those resources are part of the Government contribution (which must be matched by the recipient) and paid for directly by the awarding organization.

(d) *Consortia as recipients.* (1) The use of consortia as recipients for cooperative agreements is encouraged. Consortia will tend to bring to a cooperative agreement a broader range of capabilities and resources. A consortium is a group of organizations that enter into an agreement to collaborate for the purposes of the cooperative agreement with NASA. The agreement to collaborate can take the form of a legal entity such as a partnership or joint venture but it is not necessary that such an entity be created. A consortium may be made up of firms which normally compete for commercial or Government business or may be made up of firms which perform complementary functions in a given industry. The inclusion of non-profit or educational institutions, small businesses, or small disadvantaged businesses in the consortium could be particularly valuable in ensuring that the results of the consortium's activities are disseminated.

(2) Key to the success of the cooperative agreement with a consortium is the consortium's Articles of Collaboration, which is a definitive description of the roles and responsibilities of the consortium's members. It should also address to the extent appropriate: Commitments of financial, personnel, facilities and other resources, a detailed milestone chart of consortium activities, accounting requirements, subcontracting procedures, disputes, term of the agreement, insurance and liability issues, internal and external reporting requirements, management structure of the consortium, obligations of organizations withdrawing from the consortia, allocation of data and patent rights among the consortia members, agreements, if any, to share existing technology and data, the firm which is responsible for the completion of the consortium's responsibilities under the cooperative agreement and has the authority to commit the consortium and receive payments from NASA, employee policy issues, etc.

(3) An outline of the Articles of Collaboration should be required as part of the proposal and evaluated during the source selection process.

(e) *Metric system of measurement.* The Metric Conversion Act, as amended by the Omnibus Trade and Competitiveness Act (15 U.S.C. 205) declares that the metric system is the preferred measurement system for U.S. trade and commerce. NASA's policy with respect to the metric measurement system is stated in NPD 8010.2, Use of the Metric System of Measurement in NASA Programs.

(f) *Term of agreement.* The provisions set forth in § 1274.901 are generally considered appropriate for agreements not exceeding 3 years and/or a Government cash contribution not exceeding $20M. For cooperative agreements expected to be longer than 3 years and/or involve a Government cash contribution exceeding $20M, consideration should be given to provisions which place additional restrictions on the recipient in terms of validating performance and accounting for funds expended.

§ 1274.203 Intellectual property.

(a) A cooperative agreement covers the disposition of rights to intellectual property between NASA and the recipient. If the recipient is a consortium or partnership, rights flowing between multiple organizations in a consortium must be negotiated separately and formally documented, preferably in the Articles of Collaboration.

(b) Patent rights clauses are required by statute and regulation. The clauses exist for recipients of the agreement whether they are:

(1) Other than small business or nonprofit organizations (generally referred to as large businesses) or

(2) Small businesses or nonprofit organizations.

(c) There are five situations in which inventions may arise under a cooperative agreement: recipient inventions, subcontractor inventions, NASA inventions, NASA support contractor inventions, and joint inventions with recipient.

(d)(1) *Recipient inventions.*

(i) A recipient, if a large business, is subject to Section 305 of the National Aeronautics and Space Act of 1958 (42 U.S.C. 2457) relating to property rights in inventions. The term ''invention'' includes any invention, discovery, improvement, or innovation. Title to an invention made under a cooperative agreement by a large business recipient initially vests with NASA. The recipient may request a waiver under the NASA Patent Waiver Regulations to obtain title to inventions made under the agreement. Such a request may be made in advance of the agreement (or 30 days thereafter) for all inventions made under the agreement. Alternatively, requests may be made on a case by case basis any time an individual invention is made. Such waivers are liberally and expeditiously granted after review by NASA's Invention and Contribution Board and approval by NASA's General Counsel. When a waiver is granted, any inventions made in the performance of work under the agreement are subject to certain reporting, election and filing requirements, a royalty-free license to the Government, march-in rights, and certain other reservations.

(ii) A recipient, if a small business or nonprofit organization, may elect to retain title to its inventions. The term ''nonprofit organization'' is defined in 35 U.S.C. 201(i) and includes universities and other institutions of higher education or an organization of the type described in section 501(c)(3) of the Internal Revenue Code (26 U.S.C.). The Government obtains an irrevocable, nonexclusive, royalty-free license.

(2) *Subcontractor inventions.*

(i) Large business. If a recipient enters a subcontract (or similar arrangement) with a large business organization for experimental, developmental, research, design or engineering work in support of the agreement to be done in the United States, its possessions, or Puerto Rico, section 305 of the Space Act applies. The clause applicable to large business organizations is to be used (suitably modified to identify the parties) in any subcontract. The subcontractor may request a waiver under the NASA Patent Waiver Regulations to obtain rights to inventions made under the subcontract just as a large business recipient can (see paragraph (d)(1)(i) of this section). It is strongly recommended that a prospective large business subcontractor contact the NASA installation Patent Counsel or Intellectual Property Counsel to assure that the right procedures are followed. Just like the recipient, any inventions made in the performance of work under the agreement are subject to certain reporting, election and filing requirements, a royalty-free license to the Government, march-in rights, and certain other reservations.

(ii) Non-profit organization or small business. In the event the recipient enters into a subcontract (or similar arrangement) with a domestic nonprofit organization or a small business firm for experimental, developmental, or research work to be performed under

the agreement, the requirements of 35 U.S.C. 200 *et seq.* regarding ''Patent Rights in Inventions Made With Federal Assistance,'' apply. The subcontractor has the first option to elect title to any inventions made in the performance of work under the agreement, subject to specific reporting, election and filing requirements, a royalty-free license to the Government, march-in rights, and certain other reservations that are specifically set forth.

(iii) Work outside the United States. If the recipient subcontracts for work to be done outside the United States, its possessions or Puerto Rico, the NASA installation Patent Counsel or Intellectual Property Counsel should be contacted for the proper patent rights clause to use and the procedures to follow.

(iv) Notwithstanding paragraphs (d)(2)(i), (ii) and (iii), and in recognition of the recipient's substantial contribution, the recipient is authorized, subject to rights of NASA set forth elsewhere in the agreement, to:

(A) Acquire by negotiation and mutual agreement rights to a subcontractor's subject inventions as the recipient may deem necessary, or

(B) If unable to reach agreement pursuant to paragraph (d)(2)(iv)(A) of this section, request that NASA invoke exceptional circumstances as necessary pursuant to 37 CFR 401.3(a)(2) if the prospective subcontractor is a small business firm or nonprofit organization, or for all other organizations, request that such rights for the recipient be included as an additional reservation in a waiver granted pursuant to 14 CFR 1245.1. The exercise of this exception does not change the flow down of the applicable patent rights clause to subcontractors. Applicable laws and regulations require that title to inventions made under a subcontract must initially reside in either the subcontractor or NASA, not the recipient. This exception does not change that. The exception does authorize the recipient to negotiate and reach mutual agreement with the subcontractor for the grant-back of rights. Such grant-back could be an option for an exclusive license or an assignment, depending on the circumstances.

(3) *NASA inventions.* NASA will use reasonable efforts to report inventions made by its employees as a consequence of, or which bear a direct relation to, the performance of specified NASA activities under an agreement. Upon timely request, NASA will use its best efforts to grant recipient first option to acquire either an exclusive or partially-exclusive, revocable, royalty-bearing license, on terms to be negotiated, for any patent applications and patents covering such inventions. This exclusive or partially-exclusive license to the recipient will be subject to the retention of rights by or on behalf of the Government for Government purposes.

(4) *NASA support contractor inventions.* It is preferred that NASA support contractors be excluded from performing any of NASA's responsibilities under the agreement since the rights obtained by a NASA support contractor could work against the rights needed by the recipient. In the event NASA support contractors are tasked to work under the agreement and inventions are made by support contractor employees, the support contractor will normally retain title to its employee inventions in accordance with 35 U.S.C. 202, 14 CFR part 1245, and Executive Order 12591. In the event the recipient decides not to pursue right to title in any such invention and NASA obtains title to such inventions, upon timely request, NASA will use its best efforts to grant recipient first option to acquire either an exclusive or partially exclusive, revocable, royalty-bearing license, upon terms to be negotiated, for any patent applications and patents covering such inventions. This exclusive or partially-exclusive license to the recipient will be subject to the retention of rights by or on behalf of the Government for Government purposes.

(5) *Joint inventions.* (i) NASA and the recipient agree to use reasonable efforts to identify and report to each other any inventions made jointly between NASA employees (or employees of NASA support contractors) and employees of recipient. For large businesses, the Associate General Counsel (Intellectual Property) may agree that the United States will refrain, for a specified period, from exercising its undivided interest in a manner inconsistent with recipient's commercial interest. For small business firms and nonprofit organizations, the Associate General Counsel (Intellectual Property) may agree to assign or transfer whatever rights NASA may acquire in a subject invention from its employee to the recipient as authorized by 35 U.S.C. 202(e). The grant officer negotiating the agreement with small business firms and nonprofit organizations can agree, up front, that NASA will assign whatever rights it may acquire in a subject invention from its employee to the small business firm or nonprofit organization. Requests under this paragraph shall be made through the Center Patent Counsel.

(ii) NASA support contractors may be joint inventors. If a NASA support contractor employee is a joint inventor with a NASA employee, the same provisions apply as those for NASA Support Contractor Inventions. The NASA support contractor will retain or obtain nonexclusive licenses to those inventions in which NASA obtains title. If a NASA support contractor employee is a joint inventor with a recipient employee, the NASA support contractor and recipient will become joint owners of those inventions in which they have elected to retain title or requested and have been granted waiver of title. Where the NASA support contractor has not elected to retain title or has not been granted waiver of title, NASA will jointly own the invention with the recipient.

(e) *Licenses to Recipient(s).* (1) Any exclusive or partially exclusive commercial licenses are to be royalty-bearing consistent with Government-wide policy in licensing its inventions. It also provides an opportunity for royalty-sharing with the employee-inventor, consistent with Government-wide policy under the Federal Technology Transfer Act.

(2) Upon application in compliance with 37 CFR part 404—Licensing of Government Owned Inventions, all recipients shall be granted a revocable, nonexclusive, royalty-free license in each patent application filed in any country on a subject invention and any resulting patent in which the Government obtains title. Because cooperative agreements are cost sharing cooperative arrangements with a purpose of benefiting the public by improving the competitiveness of the recipient and the Government receives an irrevocable, nonexclusive, royalty-free license in each recipient subject invention, it is only equitable that the recipient receive, at a minimum, a revocable, nonexclusive, royalty-free license in NASA inventions and NASA contractor inventions where NASA has acquired title.

(3) Once a recipient has exercised its option to apply for an exclusive or partially exclusive license, a notice, identifying the invention and the recipient, is published in the **Federal Register**, providing the public opportunity for filing written objections for 60 days.

(f) *Preference for United States manufacture.* Despite any other provision, the recipient agrees that any products embodying subject inventions or produced through the use of subject inventions shall be manufactured substantially in the United States. The intent of this provision is to support manufacturing jobs in the United States regardless of the status of the recipient

as a domestic or foreign controlled company. However, in individual cases, the requirement to manufacture substantially in the United States, may be waived by the Associate Administrator for Procurement (Code HS) upon a showing by the recipient that under the circumstances domestic manufacture is not commercially feasible.

(g) *Space Act Agreements.* Invention and patent rights in cooperative agreements must comply with statutory and regulatory provisions. Where circumstances permit, a Space Act agreement is available as an alternative instrument which can be more flexible in the area of invention and patent rights.

(h) *Data rights.* Data rights provisions can and should be tailored to best achieve the needs and objectives of the respective parties concerned.

(1) The data rights clause at § 1274.905 assumes a substantially equal cost sharing relationship where collaborative research, experimental, developmental, engineering, demonstration, or design activities are to be carried out, such that it is likely that ''proprietary'' information will be developed and/or exchanged under the agreement. If cost sharing is unequal or no extensive research, experimental, developmental, engineering, demonstration, or design activities are likely, a different set of clauses may be appropriate.

(2) The primary question that must be answered when developing data clauses is what does each party need or intend to do with the data developed under the agreement. Accordingly, the data rights clauses may be tailored to fit the circumstances. Where conflicting goals of the parties result in incompatible data provisions, grant officers for the Government must recognize that private companies entering into cooperative agreements bring resources to that relationship and must be allowed to reap an appropriate benefit for the expenditure of those resources. However, since serving a public purpose is a major objective of a cooperative agreement, care must be exercised to ensure the recipient is not established as a long term sole source supplier of an item or service and is not in a position to take unfair advantage of the results of the cooperative agreement. Therefore, a reasonable time period (depending on the technology, two to five years after production of the data) may be established after which the data first produced by the recipient in the performance of the agreement will be made public.

(3) Data can be generated from different sources and can have various restrictions placed on its dissemination. Recipient data furnished to NASA can exist prior to, or be produced outside of, the agreement or be produced under the agreement. NASA can also produce data in carrying out its responsibilities under the agreement. Each of these areas need to be covered.

(4) For data, including software, first produced by the recipient under the agreement, the recipient may assert copyright. Data exchanged with a notice showing that the data is protected by copyright must include appropriate licenses in order for NASA to use the data as needed.

(5) Recognizing that the dissemination of the results of NASA's activities is a primary objective of a cooperative agreement, the parties should specifically delineate what results will be published and under what conditions. This should be set forth in the clause of the cooperative agreement entitled ''Publication and Reports.'' Any such agreement on the publication of results should be stated to take precedence over any other clause in the cooperative agreement.

(6) In accordance with section 303(b) of the Space Act, any data first produced by NASA under the agreement which embodies trade secrets or financial information that would be privileged or confidential if it had been obtained from a private participant, will be marked with an appropriate legend and maintained in confidence for an agreed to period of up to five years (the maximum allowed by law). This does not apply to data other than that for which there has been agreement regarding publication or distribution. The period of time during which data first produced by NASA is maintained in confidence should be consistent with the period of time determined in accordance with paragraph (h)(2) of this section, before which data first produced by the recipient will be made public. Also, NASA itself may use the marked data (under suitable protective conditions) for agreed-to purposes.

§ 1274.204 Evaluation and selection.

(a) *Evaluation factor.* A single technical evaluation factor is typically used for CANs. That evaluation factor should be one of the following: Providing research and development or technology transfer, enhancing U.S. competitiveness, or developing a capability among U.S. firms. Award to foreign firms is not precluded if the evaluation factor is satisfied. Subfactors could include such things as fostering U.S. leadership, potential to advance technologies anticipated to enhance U.S. competitiveness, timeliness of proposed accomplishments, private sector commitment to commercialization, identification of specific potential commercial markets, appropriateness of business risk, potential for broad impact on the U.S. technology and knowledge base, level of commitment (contribution of private resources to the project), appropriateness of team member participation and relationships, (this subfactor should include consideration of the participation of an appropriate mix of small business, small disadvantaged business, and women-owned small business concerns, as well as non-profits and educational institutions, including historically black colleges and universities and minority institutions) appropriateness of management planning, relevant experience, qualifications and depth of management and technical staff, quality and appropriateness of resources committed to the project, performance bench marks, technical approach, business approach/resource sharing, past performance, the articles of collaboration, etc.

(b) *Technical evaluation.* (1) Competitive technical proposal information shall be protected in accordance with 48 CFR (FAR) 15.207, Handling Proposals and Information. Unsolicited proposals shall be protected in accordance with 48 CFR (FAR) 15.608, Prohibitions, and 48 CFR (FAR) 15.609, Limited Use of Data.

(i) Selecting officials and grant/contracting officers are responsible for protecting sensitive information on the award of a grant or cooperative agreement and for determining who is authorized to receive such information. Sensitive information includes: information contained in proposals; information prepared for NASA's evaluation of proposals; the rankings of proposals for an award; reports and evaluations of source selection panels, boards, or advisory councils; and other information deemed sensitive by the selecting official or by the grant/contracting officer.

(ii) No sensitive information shall be disclosed unless the selecting official or the grant/contracting officer has approved disclosure based upon an unequivocal ''need-to-know'' and the individual receiving the information has signed a Non-Disclosure Certificate (Exhibit E to subpart A of 14 CFR part 1260). All attendees at formal source selection presentations and briefings shall be required to sign an Attendance Roster. The attendance rosters and certificates shall be maintained in

official files for a minimum of six months after award.

(iii) The improper disclosure of sensitive information could result in criminal prosecution or an adverse action.

(2) The technical officer will evaluate proposals in accordance with the criteria in the CAN. Proposals selected for award will be supported by documentation as described in paragraph (c)(1) of this section. When evaluation results in a proposal not being selected, the proposer will be notified in accordance with the CAN.

(3) The technical evaluation of proposals may include peer reviews. Since the business sense of a cooperative agreement proposal is critical to its success, NASA should reserve the right to utilize appropriate outside evaluators to assist in the evaluation of such proposal elements as the business base projections, the market for proposed products, and/or the impact of anticipated product price reductions. The use of outside evaluators shall be approved in accordance with 48 CFR (NFS) 1815.207–70(b). A cover sheet with the following legend shall be affixed to data provided to outside evaluators:

Government Notice for Handling Proposals

This proposal shall be used and disclosed for evaluation purposes only, and a copy of this Government notice shall be applied to any reproduction or abstract thereof. Any authorized restrictive notices which the submitter places on this proposal shall also be strictly complied with.

(4) Evaluation of unsolicited proposals must consider whether: the subject of the proposal is available to NASA from another source without restriction; the proposal closely resembles a pending competitive acquisition; and the research proposed demonstrates an innovative and unique method, approach, or concept. Organizations submitting unaccepted proposals will be notified in writing.

(c) *Documentation requirements.* For proposals selected for award, the technical officer will prepare and furnish to the grant officer the following documentation:

(1) For a competitively selected proposal, a signed selection statement and technical evaluation based on the evaluation criteria stated in the solicitation.

(2) For an unsolicited proposal, a justification for acceptance of an unsolicited proposal (JAUP) prepared by the cognizant technical office. The JAUP shall be submitted for the approval of the grant officer after review and concurrence at a level above the technical officer. The evaluator shall consider the following factors, in addition to any others appropriate for the particular proposal:

(i) Unique and innovative methods, approaches or concepts demonstrated by the proposal.

(ii) Overall scientific or technical merits of the proposal.

(iii) The offeror's capabilities, related experience, facilities, techniques, or unique combinations of these which are integral factors for achieving the proposal objectives.

(iv) The qualifications, capabilities, and experience of the proposed key personnel who are critical in achieving the proposal objectives.

(v) Current, open solicitations under which the unsolicited proposal could be evaluated.

(d) *Cost evaluation.* (1) The grant officer and technical team will determine whether the overall proposed cost of the project is reasonable and that the recipient's contribution is valid, verifiable, and available. Commitments should be obtained and verified to the extent practical from the offeror or members of the consortia that the proposed contributions can and will be made as specified in the proposal or statement of work.

(i) If the recipient's verified share on a cooperative agreement equals or exceeds 50 percent of the total cost of the agreement and the total value of the agreement is less than $5 million, the cost evaluation of the offeror's proposal should focus on the overall reasonableness and timing of the proposer's contribution. Cost or pricing data should not be required and information other than cost or pricing data (defined in 48 CFR (FAR) 15.403–3) should not normally be required.

(ii) If the recipient's share is projected to be less than 50 percent or the total value of the agreement is more than $5 million, a more in-depth analysis of the proposed costs should be undertaken. Only information other than cost or pricing data should be required. An analysis consistent with 48 CFR (FAR) 15.404–1 through 15.404–2 should be performed.

(2) As part of the evaluation of the cost proposal, the source of the recipient's contribution should be determined. Each of the cost elements contributed by the recipient and their amounts should be identified. If the contribution will consist at least in part of IR&D, the extent to which the IR&D may be recoverable from Government awards should be established. This will involve using the estimated Government participation rate of the recipient's General and Administrative indirect cost base for the period of the cooperative agreement. An analysis consistent with 48 CFR (FAR) 15.404–1 and 15.404–2 should be performed.

(e) *Consortium.* If the cooperative agreement is to be awarded to a consortium, a completed, formally executed Articles of Collaboration is required prior to award.

(f) *Printing, binding, and duplicating.* Proposals for effort which involve printing, binding, and duplicating in excess of 25,000 pages are subject to the regulations of the Congressional Joint Committee on Printing. The technical office will refer such proposals to the Installation Central Printing Management Officer (ICPMO) to ensure compliance with NPD 1490.1. The grant officer will be advised in writing of the results of the ICPMO review.

§ 1274.205 Award procedures.

(a) *General.* Multiple year cooperative agreements are encouraged, but normally they should not extend beyond two years.

(b) *Award above proposed amount.* Awards of cooperative agreements in response to competitive solicitations will not result in providing more NASA funds or resources than was anticipated in the recipient's proposal. If additional funds or resources are deemed necessary, they will be provided by the recipient and the Government cost share percentage will be adjusted downward.

(c) *Changes to cooperative agreements.* Cost growth or in-scope changes shall not increase the amount of NASA's contribution. Additional costs which arise during the performance of the cooperative agreement are the responsibility of the recipient. Funding for work required beyond the scope of the cooperative agreement must be sought through the submission of a proposal which will be treated as an unsolicited proposal.

(d) *Bilateral award.* All cooperative agreements awarded under this part will be awarded on a bilateral basis.

(e) *Certifications and representations.* (1) Unless prohibited by statute or codified regulation, recipients will be encouraged to submit certifications and representations required by statute, executive order, or regulation on an annual basis, if the recipients have ongoing and continuing relationships with the agency. Annual certifications and representations shall be signed by responsible officials with the authority to ensure recipients' compliance with the pertinent requirements.

(2) Civil rights requirements—nondiscrimination in certain Federally-funded programs. Recipients must furnish assurances of compliance with

civil rights statutes specified in 14 CFR parts 1250 through 1252. Such assurances are not required for each cooperative agreement, if they have previously been furnished and remain current and accurate. Certifications to NASA are normally made on NASA Form 1206, which may be obtained from the grant officer. Upon acceptance, the grant officer will forward assurances to the NASA Office of Equal Opportunity Programs for recording and retention purposes.

(3) NASA cooperative agreements are subject to the provisions of 14 CFR Part 1265, Government-wide Debarment and Suspension (Nonprocurement) and Government-wide requirements for Drug-Free Workplace (Grants), unless excepted by 1265.110 and 1265.610.

(4) A Lobbying Certification in accordance with 14 CFR part 1271 will be obtained prior to award.

(f) Indemnification under Public Law 85–804 is not authorized for cooperative agreements.

(g) *Notice of significant action.* The standard operating procedures for the Office of Public Affairs will be followed when notifying Congress and releasing information to the news media about awards. Grant/Contracting Officers must approve any exceptions to this policy.

§ 1274.206 Document format and numbering.

(a) Grant officers are authorized to use the format set forth in Exhibit B to subpart A of 14 CFR part 1260, with minimum modification, as the standard cooperative agreement cover page for the award of all cooperative agreements.

(b) Cooperative agreement numbering prior to Integrated Financial Management Project (IFMP) implementation shall conform to 48 CFR (NFS) 1804.7102–3, except that a NCC prefix will be used in lieu of the NAS prefix.

(c) There will be a phase-in term for Center implementation of the IFMP. For Centers using IFMP Performance Purchasing, the following cooperative agreement numbering system shall be used for new awards (awards made prior to conversation to IFMP will retain previously assigned numbers):

(1) Document Type for cooperative agreements. Cooperative agreements will use the prefix CO.

(2) Agency Identifier. The Agency identifier NAS shall follow the document number.

(3) Center Smart Codes. The Center identifier shall follow the document type:

Installation	Smart Code
Ames Research Center	A
Dryden Flight Research Center	D
Glen Research Center	C
Goddard Space Flight Center	G
Headquarters	H
Johnson Space Center	J
Kennedy Space Center	K
Langley Research Center	L
Marshall Space Flight Center	M
NASA Management Office-JPL	P
Stennis Space Center	S

(4) Fiscal Year. The fiscal year shall be represented as two digits.

(5) Procurement Code. Cooperative Agreements will be identified using ''A'' as the procurement code.

(6) Serial Numbers. Installations shall number cooperative agreements with commercial firms serially by fiscal year, within the same number series used for grants and cooperative agreements with non-profit organizations. The serial number shall be six digits commencing with ''000001'' and continuing in succession.

§ 1274.207 Distribution of cooperative agreements.

Copies of cooperative agreements and modifications will be provided to: payment office, technical officer, administrative grant officer when delegation has been made, NASA Center for Aerospace Information (CASI), Attn: Document Processing Section, 7121 Standard Drive, Hanover, MD 21076, and any other appropriate recipient. Copies of the statement of work, contained in the recipient's proposal and accepted by NASA, will be provided to the administrative grant officer and CASI. The cooperative agreement file will contain a record of the addresses for distributing agreements and supplements.

Subpart C—Administration

§ 1274.301 Delegation of administration.

Normally, cooperative agreements will be administered by the awarding activity. NASA Form 1678, NASA Technical Officer Delegation for Cooperative Agreements with Commercial Firms, will be used to delegate responsibilities to the NASA Technical Officer.

§ 1274.302 Transfers, novations, and change of name agreements.

(a) *Transfer of cooperative agreements.* Novation is the only means by which a cooperative agreement may be transferred from one recipient to another.

(b) *Novation and change of name.* All novation agreements and change of name agreements of the recipient, prior to execution, shall be reviewed by NASA legal counsel for legal sufficiency prior to approval.

Subpart D—Government Property

§ 1274.401 Government property.

The accomplishment of a cooperative agreement may require the purchase of equipment for a wide range of purposes. If this equipment is purchased with Government funds, i.e., as part of the Government contribution to the cooperative agreement, it becomes Government property and must be disposed of in accordance with 48 CFR (FAR) part 45 at the conclusion of the cooperative agreement. In some cases, this may meet the needs of the parties. If, however, the recipient may need the equipment to continue commercial efforts following the cooperative agreement, it should be purchased by the recipient and included as a non-cash contribution of the recipient. In this way, it is not procured, not even in part, with Government funds and the Government acquires no ownership interest. Procurement by the recipient may be before or during the performance of the cooperative agreement.

Subpart E—Procurement Standards

§ 1274.501 Subcontracts.

Recipients (individual firms or consortia) are not authorized to issue grants or cooperative agreements to subrecipients. All contracts, including small purchases, awarded by recipients and their contractors shall contain the procurement provisions of appendix A to this part, as applicable and may be subject to approval requirements cited in § 1274.925.

Subpart F—Reports and Records

§ 1274.601 Retention and access requirements for records.

(a) This subpart sets forth requirements for record retention and access to records for awards to recipients.

(b) Financial records, supporting documents, statistical records, and all other records pertinent to an award shall be retained for a period of three years from the date of submission of the final invoice. The only exceptions are the following:

(1) If any litigation, claim, or audit is started before the expiration of the 3-year period, the records shall be retained until all litigation, claims or audit findings involving the records have been resolved and final action taken.

(2) Records for real property and equipment acquired with Federal funds shall be retained for 3 years after final disposition.

(3) When records are transferred to or maintained by NASA, the 3-year retention requirement is not applicable to the recipient.

(4) Indirect cost rate proposals, cost allocations plans, etc. as specified in paragraph (g) of this section.

(c) Copies of original records may be substituted for the original records if authorized by NASA.

(d) NASA shall request transfer of certain records to its custody from recipients when it determines that the records possess long term retention value. However, in order to avoid duplicate record keeping, NASA may make arrangements for recipients to retain any records that are continuously needed for joint use.

(e) NASA, the Inspector General, Comptroller General of the United States, or any of their duly authorized representatives, have the right of timely and unrestricted access to any books, documents, papers, or other records of recipients that are pertinent to the awards, in order to make audits, examinations, excerpts, transcripts and copies of such documents. This right also includes timely and reasonable access to a recipient's personnel for the purpose of interview and discussion related to such documents. The rights of access in this paragraph are not limited to the required retention period, but shall last as long as records are retained.

(f) Unless required by statute, NASA shall not place restrictions on recipients that limit public access to the records of recipients that are pertinent to an award, except when NASA can demonstrate that such records shall be kept confidential and would have been exempted from disclosure pursuant to the Freedom of Information Act (5 U.S.C. 552) if the records had belonged to NASA.

(g) This paragraph applies to the following types of documents, and their supporting records: indirect cost rate computations or proposals, cost allocation plans, and any similar accounting computations of the rate at which a particular group of costs is chargeable (such as computer usage chargeback rates or composite fringe benefit rates).

(1) If submitted for negotiation. If the recipient submits to NASA or the subrecipient submits to the recipient the proposal, plan, or other computation to form the basis for negotiation of the rate, then the 3-year retention period for its supporting records starts on the date of such submission.

(2) If not submitted for negotiation. If the recipient is not required to submit to NASA or the subrecipient is not required to submit to the recipient the proposal, plan, or other computation for negotiation purposes, then the 3-year retention period for the proposal, plan, or other computation and its supporting records starts at the end of the fiscal year (or other accounting period) covered by the proposal, plan, or other computation.

Subpart G—Suspension and Termination

§ 1274.701 Suspension or termination.

A cooperative agreement provides both NASA and the recipient the ability to terminate the agreement if it is in their best interests to do so. For example, NASA may terminate the agreement if the recipient is not making anticipated technical progress, if the recipient materially fails to comply with the terms of the agreement, if the recipient materially changes the objective of the agreement, or if appropriated funds are not available to support the program. Similarly, the recipient may terminate the agreement if, for example, technical progress is not being made, if the firms are shifting their technical emphasis, or if other technological advances have made the effort obsolete. NASA or the recipient may also suspend the cooperative agreement for a short period of time if an assessment needs to be made as to whether the agreement should be terminated.

Subpart H—After-the-Award Requirements

§ 1274.801 Purpose.

Sections 1274.802 and 1274.803 contain closeout procedures and other procedures for subsequent disallowances and adjustments.

§ 1274.802 Closeout procedures.

(a) Recipients shall submit, within 90 calendar days after the date of completion of the cooperative agreement, all financial, performance, and other reports as required by the terms and conditions of the award. Extensions may be approved when requested by the recipient.

(b) The recipient shall account for any real and personal property acquired with Federal funds or received from the Federal Government in accordance with subpart D of this part.

§ 1274.803 Subsequent adjustments and continuing responsibilities.

The closeout of an award does not affect any of the following:

(a) Audit requirements in § 1274.932.

(b) Property management requirements in subpart D of this part.

(c) Records retention as required in § 1274.601.

Subpart I—Provisions and Special Conditions

§ 1274.901 Other provisions and special conditions.

The provisions set forth in this subpart are to be incorporated in and made a part of all cooperative agreements. The provisions at §§ 1274.902 through 1274.909 and the provision at § 1274.933 are to be incorporated in full text substantially as stated in this subpart. The provisions at §§ 1274.910 through 1274.932 and § 1274.934 will be incorporated by reference in an enclosure to each cooperative agreement. For inclusion of provisions in subcontracts, see subpart E, Procurement Standards, of this Part.

§ 1274.902 Purpose.

Purpose

October 2000

The purpose of this cooperative agreement is to conduct a shared resource project that will lead to _____. This cooperative agreement will advance the technology developments and research which have been performed on _____. The specific objective is to _____. This work will culminate in _____.

[End of provision]

§ 1274.903 Responsibilities.

Responsibilities

October 2000

(a) This cooperative agreement will include substantial NASA participation during performance of the effort. NASA and the Recipient agree to the following Responsibilities, a statement of cooperative interactions to occur during the performance of this effort. NASA and the Recipient shall exert all reasonable efforts to fulfill the responsibilities stated below.

(b) NASA Responsibilities. The following NASA responsibilities are hereby set forth with anticipated start and ending dates, as appropriate:

Responsibility *Start* *End*

(c) Recipient Responsibilities. The Recipient shall be responsible for particular aspects of project performance as set forth in the technical proposal dated _____, attached hereto (or Statement of Work dated _____, attached hereto.). The following responsibilities are hereby set forth with anticipated start and ending dates, as appropriate:

Responsibility *Start* *End*

(d) Since NASA contractors may obtain certain intellectual property rights arising from work for NASA in support of this agreement, NASA will inform Recipient whenever NASA intends to use NASA

contractors to perform technical engineering services in support of this agreement.

[End of provision]

§ 1274.904 Resource sharing requirements.

Resource Sharing Requirements

October 2000

(a) NASA and the Recipient will share in providing the resources necessary to perform the agreement. NASA funding and non-cash contributions (personnel, equipment, facilities, etc.) and the dollar value of the Recipient's cash and/or non-cash contribution will be on a ____ (NASA)– ____ (Recipient) basis. Criteria and procedures for the allowability and allocability of cash and non-cash contributions shall be governed by Section 23, ''Cost Sharing or Matching,'' of OMB Circular A–110. The ''applicable federal cost principles'' cited in OMB Circular A–110 shall be determined in accordance with 1274.919.

(b) The Recipient's share shall not be charged to the Government under this agreement or under any other contract, grant, or cooperative agreement, except to the extent that the Recipient's contribution may be allowable IR&D costs pursuant to 48 CFR (NFS) 1831.205–18.

[End of provision]

§ 1274.905 Rights in data.

(As noted in § 1274.203(h)(1), the following provision assumes a substantially equal cost sharing relationship where collaborative research, experimental, developmental, engineering, demonstration, or design activities are to be carried out, such that it is likely that ''proprietary'' information will be developed and/or exchanged under the agreement. If cost sharing is unequal or no extensive research, experimental, developmental, engineering, demonstration, or design activities are likely, a different set of provisions may be appropriate.

The grant officer is expected to complete and/or select the appropriate bracketed language under the provision for those paragraphs dealing with data first produced under the cooperative agreement. In addition, the grant officer may, in consultation with the Center's Patent or Intellectual Property Counsel, tailor the provision to fit the particular circumstances of the program and/or the recipient's need to protect specific proprietary information.)

Rights in Data

October 2000

(a) *Definitions.*

''Data,'' means recorded information, regardless of form, the media on which it may be recorded, or the method of recording. The term includes, but is not limited to, data of a scientific or technical nature, computer software and documentation thereof, and data comprising commercial and financial information.

(b) *Data Categories.*

(1) *General:* Data exchanged between NASA and Recipient under this cooperative agreement will be exchanged without restriction as to its disclosure, use or duplication except as otherwise provided below in this provision.

(2) *Background Data:* In the event it is necessary for Recipient to furnish NASA with Data which existed prior to, or produced outside of, this cooperative agreement, and such Data embodies trade secrets or comprises commercial or financial information which is privileged or confidential, and such Data is so identified with a suitable notice or legend, the Data will be maintained in confidence and disclosed and used by NASA and its contractors (under suitable protective conditions) only for the purpose of carrying out NASA's responsibilities under this cooperative agreement. Upon completion of activities under this agreement, such Data will be disposed of as requested by Recipient.

(3) *Data first produced by Recipient:* In the event Data first produced by Recipient in carrying out Recipient's responsibilities under this cooperative agreement is furnished to NASA, and Recipient considers such Data to embody trade secrets or to comprise commercial or financial information which is privileged or confidential, and such Data is so identified with a suitable notice or legend, the Data will be maintained in confidence for a period of (insert ''two'' to ''five'') years after development of the data and be disclosed and used by (''NASA'' or ''the Government,'' as appropriate) and its contractors (under suitable protective conditions) only for (insert appropriate purpose; for example: experimental; evaluation; research; development, etc.) by or on behalf of (''NASA'' or ''the Government'' as appropriate) during that period. In order that (''NASA'' or the ''Government'', as appropriate) and its contractors may exercise the right to use such Data for the purposes designated above, NASA, upon request to the Recipient, shall have the right to review and request delivery of Data first produced by Recipient. Delivery shall be made within a time period specified by NASA.

(4) *Data first produced by NASA:* As to Data first produced by NASA in carrying out NASA's responsibilities under this cooperative agreement and which Data would embody trade secrets or would comprise commercial or financial information that is privileged or confidential if it had been obtained from the Recipient, will be marked with an appropriate legend and maintained in confidence for an agreed to period of up to ( ) years (INSERT A PERIOD UP TO 5 YEARS) after development of the information, with the express understanding that during the aforesaid period such Data may be disclosed and used (under suitable protective conditions) by or on behalf of the Government for Government purposes only, and thereafter for any purpose whatsoever without restriction on disclosure and use. Recipient agrees not to disclose such Data to any third party without NASA's written approval until the aforementioned restricted period expires.

(5) *Copyright.*

(i) In the event Data is exchanged with a notice indicating the Data is protected under copyright as a published copyrighted work, or are deposited for registration as a published work in the U.S. Copyright Office, the following paid-up licenses shall apply:

(A) If it is indicated on the Data that the Data existed prior to, or was produced outside of, this agreement, the receiving party and others acting on its behalf, may reproduce, distribute, and prepare derivative works for the purpose of carrying out the receiving party's responsibilities under this cooperative agreement; and

(B) If the furnished Data does not contain the indication of paragraph (b)(5)(i)(A) of this section, it will be assumed that the Data was first produced under this agreement, and the receiving party and others acting on its behalf, shall be granted a paid up, nonexclusive, irrevocable, world-wide license for all such Data to reproduce, distribute copies to the public, prepare derivative works, distribute copies to the public, and perform publicly and display publicly, by or on behalf of the receiving party. For Data that is computer software, the right to distribute shall be limited to potential users in the United States.

(ii) When claim is made to copyright, the Recipient shall affix the applicable copyright notice of 17 U.S.C. 401 or 402 and acknowledgment of Government sponsorship to the data when and if the data are delivered to the Government.

(6) *Oral and visual information.* If information which the Recipient considers to embody trade secrets or to comprise commercial or financial information which is privileged or confidential is disclosed orally or visually to NASA, such information must be reduced to tangible, recorded form (*i.e.*, converted into Data as defined herein), identified and marked with a suitable notice or legend, and furnished to NASA within 10 days after such oral or visual disclosure, or NASA shall have no duty to limit or restrict, and shall not incur any liability for, any disclosure and use of such information.

(7) *Disclaimer of liability.* Notwithstanding the above, NASA shall not be restricted in, nor incur any liability for, the disclosure and use of:

(i) Data not identified with a suitable notice or legend as set in paragraph (b)(2) of this section; nor

(ii) Information contained in any Data for which disclosure and use is restricted under paragraphs (b)(2) or (3) of this section, if such information is or becomes generally known without breach of the above, is known to or is generated by NASA independently of carrying out responsibilities under this agreement, is rightfully received from a third party without restriction, or is included in data which Participant has, or is required to furnish to the U.S. Government without restriction on disclosure and use.

(c) *Marking of data.* Any Data delivered under this cooperative agreement, by NASA or the Recipient, shall be marked with a suitable notice or legend indicating the data was generated under this cooperative agreement.

(d) *Lower tier agreements.* The Recipient shall include this provision, suitably modified to identify the parties, in all subcontracts or lower tier agreements, regardless of tier, for experimental, developmental, or research work.

[End of provision]

§ 1274.906 Designation of new technology representative and patent representative.

Designation of New Technology Representative and Patent Representative

October 2000

(a) For purposes of administration of the clause of this cooperative agreement entitled ''PATENT RIGHTS—RETENTION BY THE CONTRACTOR (LARGE BUSINESS)'' or ''PATENT RIGHTS—RETENTION BY THE CONTRACTOR (SMALL BUSINESS)'' the following named representatives are hereby designated by the Grant Officer to administer such clause:

Title	Office Code	Address
New Technology Representative		
Patent Representative		

(b) Reports of reportable items, and disclosure of subject inventions, interim reports, final reports, utilization reports, and other reports required by the clause, as well as any correspondence with respect to such matters, should be directed to the New Technology Representative unless transmitted in response to correspondence or request from the Patent Representative. Inquiries or requests regarding disposition of rights, election of rights, or related matters should be directed to the Patent Representative. This clause shall be included in any subcontract hereunder requiring ''PATENT RIGHTS—RETENTION BY THE CONTRACTOR (LARGE BUSINESS)'' clause or ''PATENT RIGHTS—RETENTION BY THE CONTRACTOR (SMALL BUSINESS)'' clause, unless otherwise authorized or directed by the Grant Officer. The respective responsibilities and authorities of the above-named representatives are set forth in 48 CFR (NFS) 1827.305–70.

[End of provision]

§ 1274.907 Disputes.

Disputes

October 2000

(a) In the event that a disagreement arises, representatives of the parties shall enter into discussions in good faith and in a timely and cooperative manner to seek resolution. If these discussions do not result in a satisfactory solution, the aggrieved party may seek a decision from the Dispute Resolution Official under paragraph (b) of this provision. This request must be presented no more than (3) three months after the events giving rise to the disagreement have occurred.

(b) The aggrieved party may submit a written request for a decision to the_____[Suggest this be the Center Ombudsman], who is designated as the Dispute Resolution Official. The written request shall include a statement of the relevant facts, a discussion of the unresolved issues, and a specification of the clarification, relief, or remedy sought. A copy of this written request and all accompanying materials must be provided to the other party at the same time. The other party shall submit a written position on the matters in dispute within thirty (30) calendar days after receiving this notification that a decision has been requested. The Dispute Resolution Official shall conduct a review of the matters in dispute and render a decision in writing within thirty (30) calendar days of receipt of such written position.

[End of provision]

§ 1274.908 Milestone payments.

Milestone Payments

October 2000

(a) By submission of the first invoice, the Recipient is certifying that it has an established accounting system which complies with generally accepted accounting principles, with the requirements of this agreement, and that appropriate arrangements have been made for receiving, distributing, and accounting for Federal funds received under this agreement.

(b) Payments will be made upon the following milestones: (The schedule for payments may be based upon the Recipient's completion of specific tasks, submission of specified reports, or whatever is appropriate.)

Date	*Payment Milestone*	*Amount*

(c) Upon submission by the Recipient of invoices in accordance with the provisions of the agreement and upon certification by NASA of completion of the payable milestone, the grant officer shall authorize payment.

(d) A payment milestone may be successfully completed in advance of the date appearing in paragraph (b) of this section. However, payment shall not be made prior to that date without the written consent of the Grant Officer.

(e) The Recipient is not entitled to partial payment for partial completion of a payment milestone.

(f) Unless approved by the Grant Officer, all preceding payment milestones must be completed before payment can be made for the next payment milestone.

(g) Invoices hereunder shall be submitted in the original and five copies to the Grant Officer for certification.

[End of provision]

§ 1274.909 Term of this agreement.

Term of This Agreement

October 2000

The agreement commences on the effective date indicated on the attached cover sheet and continues until the expiration date indicated on the attached cover sheet unless terminated by either party. If all resources are expended prior to the expiration date of the agreement, the parties have no obligation to continue performance and may elect to cease at that point. The parties may extend the expiration date if additional time is required to complete the milestones at no increase in Government resources. Provisions of this agreement, which, by their express terms or by necessary implication, apply for periods of time other than that specified as the agreement term, shall be given effect, notwithstanding expiration of the term of the agreement.

[End of provision]

§ 1274.910 Authority.

Authority

October 2000

This is a cooperative agreement as defined in 31 U.S.C. 6305 (the Chiles Act) and is entered into pursuant to the authority of 42 U.S.C. 2451, *et seq.* (the Space Act).

[End of provision]

§ 1274.911 Patent rights.

Patent Rights (July 2000)

(a) *Definitions.*

(1) *''Administrator''* means the Administrator or Deputy Administrator of NASA.

(2) *''Invention''* means any invention or discovery which is or may be patentable or otherwise protectable under Title 35 of the United States Code.

(3) ''Made'' when used in relation to any invention means the conception or first actual reduction to practice such invention.

(4) ''Nonprofit organization'' means a domestic university or other institution of higher education or an organization of the type described in section 501(c)(3) of the Internal Revenue Code of 1954 (26 U.S.C. 501(c)) and exempt from taxation under Section 501(a) of the Internal Revenue Code (26 U.S.C. 501(a)), or any domestic nonprofit scientific or educational organization qualified under a State nonprofit organization statute.

(5) *''Practical application''* means to manufacture, in the case of a composition or product; to practice, in the case of a process or method; or to operate, in the case of a machine or system; and, in each case, under such conditions as to establish that the invention is being utilized and that its benefits are, to the extent permitted by law or Government regulations, available to the public on reasonable terms.

(6) ''Recipient'' means:

(i) The signatory Recipient party or parties or;

(ii) The Consortium, where a Consortium has been formed for carrying out Recipient responsibilities under this agreement.

(7) *''Small Business Firm''* means a domestic small business concern as defined at 15 U.S.C. 632 and implementing regulations (see 13 CFR 121.401 *et seq.*) of the Administrator of the Small Business Administration.

(8) *''Subject Invention''* means any invention of a Recipient and/or Government employee conceived or first actually reduced to practice in the performance of work under this Agreement.

(b) *Allocation of Principal Rights.*

(1) *Recipient Inventions.* For other than Small Business Firm or Nonprofit organization Recipients, the ''PATENT RIGHTS—RETENTION BY RECIPIENT (LARGE BUSINESS)'' provision applies. For Small Business Firm and Nonprofit organization Recipients, the ''PATENT RIGHTS—RETENTION BY RECIPIENT (SMALL BUSINESS)'' provision applies.

(2) *NASA Inventions.* NASA will use reasonable efforts to report inventions made by NASA employees as a consequence of, or

which bear a direct relation to, the performance of specified NASA activities under this cooperative agreement and, upon timely request, NASA will use its best efforts to grant the Recipient or designated Consortium Member (if applicable) the first option to acquire either an exclusive or partially exclusive, revocable, royalty-bearing license, on terms to be subsequently negotiated, for any patent applications and patents covering such inventions, and subject to the license reserved in paragraph (b)(5)(i) of this section. Upon application in compliance with 37 CFR part 404—Licensing of Government Owned Inventions, the Recipient or each Consortium Member (if applicable), shall be granted a revocable, nonexclusive, royalty-free license in each patent application filed in any country on a subject invention and any resulting patent in which the Government acquires title. Each nonexclusive license may extend to subsidiaries and affiliates, if any, within the corporate structure of the licensee and includes the right to grant sublicenses of the same scope to the extent the licensee was legally obligated to do so at the time the cooperative agreement was signed.

(3) *NASA Contractor Inventions.* In the event NASA contractors are tasked to perform work in support of specified NASA activities under this cooperative agreement and inventions are made by contractor employees, the Recipient will normally retain title to its employee inventions in accordance with 35 U.S.C. 202, 14 CFR part 1245, and Executive Order 12591. In the event the Recipient decides not to pursue right to title in any such invention and NASA obtains title to such inventions, NASA will use reasonable efforts to report such inventions and, upon timely request, NASA will use its best efforts to grant the Recipient or designated Consortium Member (if applicable) the first option to acquire either an exclusive or partially exclusive, revocable, royalty-bearing license, upon terms to be subsequently negotiated, for any patent applications and patents covering such inventions, and subject to the license reserved in paragraph (b)(5)(ii) of this section. Upon application in compliance with 37 CFR part 404 — Licensing of Government Owned Inventions, the Recipient or each Consortium Member (if applicable), shall be granted a revocable, nonexclusive, royalty-free license in each patent application filed in any country on a subject invention and any resulting patent in which the Government acquires title. Each nonexclusive license may extend to subsidiaries and affiliates, if any, within the corporate structure of the licensee and includes the right to grant sublicenses of the same scope to the extent the licensee was legally obligated to do so at the time the cooperative agreement was signed.

(4) *Joint NASA and Recipient Inventions.* NASA and Recipient agree to use reasonable efforts to identify and report to each other any inventions made jointly between NASA employees (or employees of NASA Contractors) and employees of Recipient.

(i) For other than small business firms and nonprofit organizations the Administrator may agree that the United States will refrain from exercising its undivided interest in a manner inconsistent with Recipient's commercial interest and to cooperate with Recipient in obtaining patent protection on its undivided interest on any waived inventions subject, however, to the condition that Recipient makes its best efforts to bring the invention to the point of practical application at the earliest practicable time. In the event that the Administrator determines that such efforts are not undertaken, the Administrator may void NASA's agreement to refrain from exercising its undivided interest and grant licenses for the practice of the invention so as to further its development. In the event that the Administrator decides to void NASA's agreement to refrain from exercising its undivided interest and grant licenses for this reason, notice shall be given to the Inventions and Contributions Board as to why such action should not be taken. Either alternative will be subject to the applicable license or licenses reserved in paragraph (b)(5) of this section.

(ii) For small business firms and nonprofit organization, NASA may assign or transfer whatever rights it may acquire in a subject invention from its employee to the Recipient as authorized by 35 U.S.C. 202(e).

(5) *Minimum rights reserved by the Government.* Any license or assignment granted Recipient pursuant to paragraphs (b)(2), (3), or (4) of this section will be subject to the reservation of the following licenses:

(i) As to inventions made solely or jointly by NASA employees, the irrevocable, royalty-free right of the Government of the United States to practice and have practiced the invention by or on behalf of the United States; and

(ii) As to inventions made solely by, or jointly with, employees of NASA Contractors, the rights in the Government of the United States as set forth in paragraph (b)(5)(i) of this section, as well as the revocable, nonexclusive, royalty-free license in the contractor as set forth in 14 CFR 1245.108.

(6) *Preference for United States manufacture.* The Recipient agrees that any products embodying subject inventions or produced through the use of subject inventions shall be manufactured substantially in the United States. However, in individual cases, the requirement to manufacture substantially in the United States may be waived by the Associate Administrator for Procurement (Code HS) with the concurrence of the Associate General Counsel for Intellectual Property upon a showing by the Recipient that under the circumstances domestic manufacture is not commercially feasible.

(7) Work performed by the Recipient under this cooperative agreement is considered undertaken to carry out a public purpose of support and/or stimulation rather than for acquiring property or services for the direct benefit or use of the Government. Accordingly, such work by the Recipient is not considered ''by or for the United States'' and the Government assumes no liability for infringement by the Recipient under 28 U.S.C. 1498.

[End of provision]

§ 1274.912 Patent rights—retention by the Recipient (large business).

Patent Rights—Retention by the Recipient (Large Business)

October 2000

(a) Definitions.

(1) *Administrator,* as used in this clause, means the Administrator of the National Aeronautics and Space Administration (NASA) or duly authorized representative.

(2) *Invention,* as used in this clause, means any invention or discovery which is or may be patentable or otherwise protectable under Title 35 of the United States Code.

(3) *Made,* as used in relation to any invention, means the conception or first actual reduction to practice such invention.

(4) *Nonprofit organization,* as used in this clause, means a domestic university or other institution of higher education or an organization of the type described in Section 501(c)(3) of the Internal Revenue Code of 1954 (26 U.S.C. 501(c)) and exempt from taxation under Section 501(a) of the Internal Revenue Code (26 U.S.C. 501(a)), or any domestic nonprofit scientific or educational organization qualified under a State nonprofit organization statute.

(5) *Practical application,* as used in this clause, means to manufacture, in the case of a composition or product; to practice, in the case of a process or method; or to operate, in case of a machine or system; and, in each case, under such conditions as to establish that the invention is being utilized and that its benefits are, to the extent permitted by law or Government regulations, available to the public on reasonable terms.

(6) *Reportable item,* as used in this clause, means any invention, discovery, improvement, or innovation of the Recipient, whether or not the same is or may be patentable or otherwise protectable under Title 35 of the United States Code, conceived or first actually reduced to practice in the performance of any work under this contract or in the performance of any work that is reimbursable under any clause in this contract providing for reimbursement of costs incurred prior to the effective date of this contract.

(7) ''*Small business firm,*'' as used in this clause, means a domestic small business concern as defined at 15 U.S.C. 632 and implementing regulations (see 13 CFR 121.401 *et seq.*) of the Administrator of the Small Business Administration.

(8) ''*Subject invention,*'' as used in this clause, means any reportable item which is or may be patentable or otherwise protectable under Title 35 of the United States Code, or any novel variety of plant that is or may be protectable under the Plant Variety Protection Act (7 U.S.C. 2321, *et seq.*).

(b) *Allocation of principal rights.*

(1) *Presumption of title.*

(i) Any reportable item that the Administrator considers to be a subject invention shall be presumed to have been made in the manner specified in paragraph (1) or (2) of section 305(a) of the National Aeronautics and Space Act of 1958 (42 U.S.C. 2457(a)) (hereinafter called ''the Act''), and the above presumption shall be conclusive unless at the time of reporting the reportable

item the Recipient submits to the Grant Officer a written statement, containing supporting details, demonstrating that the reportable item was not made in the manner specified in paragraph (1) or (2) of section 305(a) of the Act.

(ii) Regardless of whether title to a given subject invention would otherwise be subject to an advance waiver or is the subject of a petition for waiver, the Recipient may nevertheless file the statement described in paragraph (b)(1)(i) of this section. The Administrator will review the information furnished by the Recipient in any such statement and any other available information relating to the circumstances surrounding the making of the subject invention and will notify the Recipient whether the Administrator has determined that the subject invention was made in the manner specified in paragraph (1) or (2) of Section 305(a) of the Act.

(2) *Property rights in subject inventions.* Each subject invention for which the presumption of paragraph (b)(1)(i) of this section is conclusive or for which there has been a determination that it was made in the manner specified in paragraph (1) or (2) of section 305(a) of the Act shall be the exclusive property of the United States as represented by NASA unless the Administrator waives all or any part of the rights of the United States, as provided in paragraph (b)(3) of this section.

(3) *Waiver of rights.*

(i) Section 305(f) of the Act provides for the promulgation of regulations by which the Administrator may waive the rights of the United States with respect to any invention or class of inventions made or that may be made under conditions specified in paragraph (1) or (2) of section 305(a) of the Act. The promulgated NASA Patent Waiver Regulations, 14 CFR part 1245, subpart 1, have adopted the Presidential memorandum on Government Patent Policy of February 18, 1983, as a guide in acting on petitions (requests) for such waiver of rights.

(ii) As provided in 14 CFR part 1245, subpart 1, Recipients may petition, either prior to execution of the Agreement or within 30 days after execution of the Agreement, for advance waiver of rights to any or all of the inventions that may be made under an Agreement. If such a petition is not submitted, or if after submission it is denied, the Recipient (or an employee inventor of the Recipient may petition for waiver of rights to an identified subject invention within eight months of first disclosure of invention in accordance with paragraph (e)(2) of this section or within such longer period as may be authorized in accordance with 14 CFR 1245.105. Further procedures are provided in the REQUESTS FOR WAIVER OF RIGHTS—LARGE BUSINESS provision.

(c) *Minimum rights reserved by the Government.*

(1) With respect to each Recipient subject invention for which a waiver of rights is applicable in accordance with 14 CFR part 1245, subpart 1, the Government reserves —

(i) An irrevocable, royalty-free license for the practice of such invention throughout the world by or on behalf of the United States or any foreign government in accordance with any treaty or agreement with the United States; and

(ii) Such other rights as stated in 14 CFR 1245.107.

(2) Nothing contained in this paragraph shall be considered to grant to the Government any rights with respect to any invention other than a subject invention.

(d) *Minimum rights to the Recipient.*

(1) The Recipient is hereby granted a revocable, nonexclusive, royalty-free license in each patent application filed in any country on a Recipient subject invention and any resulting patent in which the Government acquires title, unless the Recipient fails to disclose the subject invention within the times specified in paragraph (e)(2) of this section. The Recipient's license extends to its domestic subsidiaries and affiliates, if any, within the corporate structure of which the Recipient is a party and includes the right to grant sublicenses of the same scope to the extent the Recipient was legally obligated to do so at the time the contract was awarded. The license is transferable only with the approval of the Administrator except when transferred to the successor of that part of the Recipient's business to which the invention pertains.

(2) The Recipient's domestic license may be revoked or modified by the Administrator to the extent necessary to achieve expeditious practical application of the subject invention pursuant to an application for an exclusive license submitted in accordance with 14 CFR part 1245, subpart 2, Licensing of NASA Inventions. This license will not be revoked in that field of use or the geographical areas in which the Recipient has achieved practical application and continues to make the benefits of the invention reasonably accessible to the public. The license in any foreign country may be revoked or modified at the discretion of the Administrator to the extent the Recipient, its licensees, or its domestic subsidiaries or affiliates have failed to achieve practical application in that foreign country.

(3) Before revocation or modification of the license, the Recipient will be provided a written notice of the Administrator's intention to revoke or modify the license, and the Recipient will be allowed 30 days (or such other time as may be authorized by the Administrator for good cause shown by the Recipient) after the notice to show cause why the license should not be revoked or modified. The Recipient has the right to appeal, in accordance with 14 CFR 1245.211, any decision concerning the revocation or modification of its license.

(e) *Invention identification, disclosures, and reports.*

(1) The Recipient shall establish and maintain active and effective procedures to assure that reportable items are promptly identified and disclosed to Recipient personnel responsible for the administration of this clause within six months of conception and/or first actual reduction to practice, whichever occurs first in the performance of work under this contract. These procedures shall include the maintenance of laboratory notebooks or equivalent records and other records as are reasonably necessary to document the conception and/or the first actual reduction to practice of the reportable items, and records that show that the procedures for identifying and disclosing reportable items are followed. Upon request, the Recipient shall furnish the Grant Officer a description of such procedures for evaluation and for determination as to their effectiveness.

(2) The Recipient will disclose each reportable item to the Grant Officer within two months after the inventor discloses it in writing to Recipient personnel responsible for the administration of this clause or, if earlier, within six months after the Recipient becomes aware that a reportable item has been made, but in any event for subject inventions before any on sale, public use, or publication of such invention known to the Recipient. The disclosure to the agency shall be in the form of a written report and shall identify the Agreement under which the reportable item was made and the inventor(s) or innovator(s). It shall be sufficiently complete in technical detail to convey a clear understanding, to the extent known at the time of the disclosure, of the nature, purpose, operation, and physical, chemical, biological, or electrical characteristics of the reportable item. The disclosure shall also identify any publication, on sale, or public use of any subject invention and whether a manuscript describing such invention has been submitted for publication and, if so, whether it has been accepted for publication at the time of disclosure. In addition, after disclosure to the agency, the Recipient will promptly notify the agency of the acceptance of any manuscript describing a subject invention for publication or of any on sale or public use planned by the Recipient for such invention.

(3) The Recipient shall furnish the Grant Officer the following:

(i) Interim reports every 12 months (or such longer period as may be specified by the Grant Officer) from the date of the Agreement, listing reportable items during that period, and certifying that all reportable items have been disclosed (or that there are no such inventions) and that the procedures required by paragraph (e)(1) of this section have been followed.

(ii) A final report, within three months after completion of the work, listing all reportable items or certifying that there were no such reportable items, and listing all subcontracts at any tier containing a patent rights clause or certifying that there were no such subcontracts.

(4) The Recipient agrees, upon written request of the Grant Officer, to furnish additional technical and other information available to the Recipient as is necessary for the preparation of a patent application on a subject invention and for the prosecution of the patent application, and to execute all papers necessary to file patent applications on subject inventions and to establish the Government's rights in the subject inventions.

(5) The Recipient agrees, subject to 48 CFR (FAR) 27.302(j), that the Government may duplicate and disclose subject invention disclosures and all other reports and papers furnished or required to be furnished pursuant to this clause.

(f) *Examination of records relating to inventions.*

(1) The Grant Officer or any authorized representative shall, pursuant to the Retention and Examination of Records provision of this cooperative agreement, have the right to examine any books (including laboratory notebooks), records, and documents of the Recipient relating to the conception or first actual reduction to practice of inventions in the same field of technology as the work under this contract to determine whether:

(i) Any such inventions are subject inventions;

(ii) The Recipient has established and maintained the procedures required by paragraph (e)(1) of this section; and

(iii) The Recipient and its inventors have complied with the procedures.

(2) If the Grant Officer learns of an unreported Recipient invention that the Grant Officer believes may be a subject inventions, the Recipient may be required to disclose the invention to the agency for a determination of ownership rights.

(3) Any examination of records under this paragraph will be subject to appropriate conditions to protect the confidentiality of the information involved.

(g) Subcontracts.

(1) Unless otherwise authorized or directed by the Grant Officer, the Recipient shall—

(i) Include this Clause Patent Rights—Retention by the Recipient—(Large Business) (suitably modified to identify the parties) in any subcontract hereunder (regardless of tier) with other than a small business firm or nonprofit organization for the performance of experimental, developmental, or research work; and

(ii) Include the clause Patent Right—Retention by the Recipient—(Small Business) (suitably modified to identify the parties) in any subcontract hereunder (regardless of tier) with a small business firm or nonprofit organization for the performance of experimental, developmental, or research work.

(2) In the event of a refusal by a prospective subcontractor to accept such a clause the Recipient—

(i) Shall promptly submit a written notice to the Grant Officer setting forth the subcontractor's reasons for such refusal and other pertinent information that may expedite disposition of the matter; and

(ii) Shall not proceed with such subcontract without the written authorization of the Grant Officer.

(3) The Recipient shall promptly notify the Grant Officer in writing upon the award of any subcontract at any tier containing a patent rights clause by identifying the subcontractor, the applicable patent rights clause, the work to be performed under the subcontract, and the dates of award and estimated completion. Upon request of the Grant Officer, the Recipient shall furnish a copy of such subcontract, and, no more frequently than annually, a listing of the subcontracts that have been awarded.

(4) The subcontractor will retain all rights provided for the Recipient in the clause of paragraph (g)(1)(i) or (1)(ii) of this section, whichever is included in the subcontract, and the Recipient will not, as part of the consideration for awarding the subcontract, obtain rights in the subcontractor's subject inventions.

(5) Notwithstanding paragraph (g)(4) of this section, and in recognition of the Contractor's substantial contribution of funds, facilities and/or equipment to the work performed under this cooperative agreement, the Recipient is authorized, subject to the rights of NASA set forth elsewhere in this clause, to:

(i) Acquire by negotiation and mutual agreement rights to a subcontractor's subject inventions as the Recipient may deem necessary to obtaining and maintaining of such private support; and

(ii) Request, in the event of inability to reach agreement pursuant to paragraph (g)(5)(i) of this section, that NASA invoke exceptional circumstances as necessary pursuant to 37 CFR 401.3(a)(2) if the prospective subcontractor is a small business firm or organization, or for all other organizations, request that such rights for the Recipient be included as an additional reservation in a waiver granted pursuant to 14 CFR part 1245, subpart 1. Any such requests to NASA should be prepared in consideration of the following guidance and submitted to the Contracting Officer.

(A) *Exceptional circumstances:* A request that NASA make an ''exceptional circumstances'' determination pursuant to 37 CFR 401.3(a)(2) must state the scope of rights sought by the Recipient pursuant to such determination; identify the proposed subcontractor and the work to be performed under the subcontract; and state the need for the determination.

(B) *Waiver petition:* The subcontractor should be advised that unless it requests a waiver of title pursuant to the NASA Patent Waiver Regulations (14 CFR part 1245, subpart 1), NASA will acquire title to the subject invention (42 U.S.C. 2457, as amended, sec. 305). If a waiver is not requested or granted, the Recipient may request a license from NASA (see licensing of NASA inventions, 14 CFR part 1245, subpart 2). A subcontractor requesting a waiver must follow the procedures set forth in the attached clause REQUESTS FOR WAIVER OF RIGHTS—LARGE BUSINESS.

(h) *Preference for United States manufacture.* The Recipient agrees that any products embodying subject inventions or produced through the use of subject inventions shall be manufactured substantially in the United States. However, in individual cases, the requirement to manufacture substantially in the United States may be waived by the Associate Administrator for Procurement (Code HS) with the concurrence of the Associate General Counsel for Intellectual Property upon a showing by the Recipient that under the circumstances domestic manufacture is not commercially feasible.

(i) *March-in rights.* The Recipient agrees that, with respect to any subject invention in which it has acquired title, NASA has the right in accordance with the procedures in 37 CFR 401.6 and any supplemental regulations of the agency to require the Recipient, an assignee or exclusive licensee of a subject invention to grant a nonexclusive, partially exclusive, or exclusive license in any field of use to a responsible applicant or applicants, upon terms that are reasonable under the circumstances, and if the subcontractor, assignee, or exclusive licensee refuses such a request NASA has the right to grant such a license itself if the Federal agency determines that—

(1) Such action is necessary because the Recipient or assignee has not taken, or is not expected to take within a reasonable time, effective steps to achieve practical application of the subject invention in such field of use;

(2) Such action is necessary to alleviate health or safety needs which are not reasonably satisfied by the Recipient, assignee, or their licensees;

(3) Such action is necessary to meet requirements for public use specified by Federal regulations and such requirements are not reasonably satisfied by the Recipient, assignee, or licensees; or

(4) Such action is necessary because the agreement required by paragraph (i) of this clause has not been obtained or waived or because a licensee of the exclusive right to use or sell any subject invention in the United States is in breach of such agreement.

[End of provision]

§ 1274.913 Patent rights—retention by the Recipient (small business).

Patent Rights—Retention by the Recipient (Small Business)

October 2000

(a) *Definitions.*

(1) ''*Invention*,'' as used in this clause, means any invention or discovery which is or may be patentable or otherwise protectable under title 35 of the U.S.C.

(2) *Made,* as used in this clause, when used in relation to any invention means the conception or first actual reduction to practice such invention.

(3) *Nonprofit organization,* as used in this clause, means a university or other institution of higher education or an organization of the type described in Section 501(c)(3) of the Internal Revenue Code of 1954 (26 U.S.C. 501(c)) and exempt from taxation under Section 501(a) of the Internal Revenue Code (26 U.S.C. 501(a)) or any nonprofit scientific or educational organization qualified under a state nonprofit organization statute.

(4) *Practical application,* as used in this clause, means to manufacture, in the case of a composition of product; to practice, in the case of a process or method, or to operate, in the case of a machine or system; and, in each case, under such conditions as to establish that the invention is being utilized and that its benefits are, to the extent permitted by law or Government regulations, available to the public on reasonable terms.

(5) *Small business firm,* as used in this clause, means a small business concern as defined at Section 2 of Public Law 85–536 (15 U.S.C. 632) and implementing regulations (see 13 CFR 121.401 *et seq.*) of the Administrator of the Small Business Administration.

(6) *Subject invention,* as used in this clause, means any invention of the

subcontractor conceived or first actually reduced to practice in the performance of work under this Agreement.

(b) *Allocation of principal rights.* The Recipient may retain the entire right, title, and interest throughout the world to each subject invention subject to the provisions of this clause and 35 U.S.C. 203. With respect to any subject invention in which the Recipient retains title, the Federal Government shall have a nonexclusive, nontransferable, irrevocable, paid-up license to practice or have practiced for or on behalf of the United States the subject invention throughout the world.

(c) *Invention disclosure, election of title, and filing of patent application by Recipient.*

(1) The Recipient will disclose each subject invention to NASA within two months after the inventor discloses it in writing to Recipient personnel responsible for patent matters. The disclosure to the agency shall be in the form of a written report and shall identify the contract under which the invention was made and the inventor(s). It shall be sufficiently complete in technical detail to convey a clear understanding to the extent known at the time of the disclosure, of the nature, purpose, operation, and the physical, chemical, biological or electrical characteristics of the invention. The disclosure shall also identify any publication, on sale or public use of the invention and whether a manuscript describing the invention has been submitted for publication and, if so, whether it has been accepted for publication at the time of disclosure. In addition, after disclosure to the agency, the Recipient will promptly notify the agency of the acceptance of any manuscript describing the invention for publication or of any sale or public use planned by the Recipient.

(2) The Recipient will elect in writing whether or not to retain title to any such invention by notifying NASA within two years of disclosure to the Federal agency. However, in any case where publication, on sale or public use has initiated the one-year statutory period wherein valid patent protection can still be obtained in the United States, the period for election of title may be shortened by the agency to a date that is no more than 60 days prior to the end of the statutory period.

(3) The Recipient will file its initial patent application on a subject invention to which it elects to retain title within one year after election of title or, if earlier, prior to the end of any statutory period wherein valid patent protection can be obtained in the United States after a publication, on sale, or public use. The Recipient will file patent applications in additional countries or international patent offices within either 10 months of the corresponding initial patent application of six months from the date permission is granted by the Commissioner of Patents and Trademarks to file foreign patent applications where such filing has been prohibited by a Secrecy Order.

(4) Requests for extension of the time for disclosure election, and filing under paragraphs (c)(1), (2), and (3) of this section may, at the discretion of the agency, be granted.

(d) *Conditions when the Government may obtain title.* The Recipient will convey to NASA, upon written request, title to any subject invention—

(1) If the Recipient fails to disclose or elect title to the subject invention within the times specified in paragraph (c) of this section, or elects not to retain title; provided, that the agency may only request title within 60 days after learning of the failure of the Recipient to disclose or elect within the specified times.

(2) In those countries in which the Recipient fails to file patent applications within the times specified in paragraph (c) of this section; provided, however, that if the Recipient has filed a patent application in a country after the times specified in paragraph (c) of this section, but prior to its receipt of the written request of the Federal agency, the Recipient shall continue to retain title in that country.

(3) In any country in which the Recipient decides not to continue the prosecution of any application for, to pay the maintenance fees on, or defend in reexamination or opposition proceeding on, a patent on a subject invention.

(e) *Minimum rights to Recipient and protection of the Recipient right to file.*

(1) The Recipient will retain a nonexclusive, royalty-free license throughout the world in each subject invention to which the Government obtains title, except if the Recipient fails to disclose the invention within the times specified in paragraph (c) of this section. The Recipient's license extends to its domestic subsidiary and affiliates, if any, within the corporate structure of which the Recipient is a party and includes the right to grant sublicenses of the same scope to the extent the Recipient was legally obligated to do so at the time the agreement was awarded. The license is transferable only with the approval of NASA, except when transferred to the successor of that part of the Recipient's business to which the invention pertains.

(2) The Contractor's domestic license may be revoked or modified by NASA to the extent necessary to achieve expeditious practical application of subject invention pursuant to an application for an exclusive license submitted in accordance with applicable provisions at 37 CFR part 404 and agency licensing regulations (if any). This license will not be revoked in that field of use or the geographical areas in which the subcontractor has achieved practical application and continues to make the benefits of the invention reasonable accessible to the public. The license in any foreign country may be revoked or modified at the discretion of NASA to the extent the subcontractor, its licensees, or the domestic subsidiaries or affiliates have failed to achieve practical application in that foreign country.

(3) Before revocation or modification of the license, NASA will furnish the Recipient a written notice of its intention to revoke or modify the license, and the Recipient will be allowed 30 days (or such other time as may be authorized by NASA for good cause shown by the Recipient) after the notice to show cause why the license should not be revoked or modified. The Recipient has the right to appeal, in accordance with applicable regulations in 37 CFR part 404, concerning the licensing of Government-owned inventions, any decision concerning the revocation or modification of the license.

(f) *Recipient action to protect the Government's interest.*

(1) The Recipient agrees to execute or to have executed and promptly deliver to NASA all instruments necessary to:

(i) Establish or confirm the rights the Government has throughout the world in those subject inventions to which the Subcontractor elects to retain title, and,

(ii) Convey title to the Federal agency when requested under paragraph (d) of this section and to enable the Government to obtain patent protection throughout the world in that subject invention.

(2) The Recipient agrees to require, by written agreement, its employees, other than clerical and nontechnical employees, to disclose promptly in writing to personnel identified as responsible for the administration of patent matters and in a format suggested by the Recipient each subject invention made under contract in order that the Recipient can comply with the disclosure provisions of paragraph (c) of this section, and to execute all papers necessary to file patent applications on subject inventions and to establish the Government's rights in the subject inventions. This disclosure format should require, as a minimum, the information required by paragraph (c)(1) of this section. The Recipient shall instruct such employees, through employee agreements or other suitable educational programs, on the importance of reporting inventions in sufficient time to permit the filing of patent applications prior to U.S. or foreign statutory bars.

(3) The Recipient will notify NASA of any decisions not to continue the prosecution of a patent application, pay maintenance fees, or defend in a reexamination or opposition proceeding on a patent, in any country, not less than 30 days before the expiration of the response period required by the relevant patent office.

(4) The Recipient agrees to include, within the specification of any United States patent application and any patent issuing thereon covering a subject invention the following statement, ''This invention was made with Government support under (identify the agreement) awarded by NASA. The Government has certain rights in the invention.''

(5) The Recipient shall provide the Grant Officer the following:

(i) A listing every 12 months (or such longer period as the Grant Officer may specify) from the date of the Agreement, of all subject inventions required to be disclosed during the period.

(ii) A final report prior to closeout of the Agreement listing all subject inventions or certifying that there were none.

(iii) Upon request, the filing date, serial number, and title, a copy of the patent application, and patent number and issue date for any subject invention in any country in which the Recipient has applied for patents.

(iv) An irrevocable power to inspect and make copies of the patent application file, by the Government, when a Federal Government employee is a co-inventor.

(g) *Subcontracts.*

(1) Unless otherwise authorized or directed by the Grant Officer, the Recipient shall—

(i) Include this clause (Patent Rights—Retention by the Recipient (Small Business)), suitably modified to identify the parties, in all subcontracts, regardless of tier, for experimental, developmental, or research work to be performed by a small business firm or domestic nonprofit organization; and

(ii) Include in all other subcontracts, regardless of tier, for experimental, developmental, or research work the patent rights clause (Patent Rights—Retention by the Recipient (Large Business)).

(2) In the event of a refusal by a prospective subcontractor to accept such a clause the Recipient—

(i) Shall promptly submit a written notice to the Grant Officer setting forth the subcontractor's reasons for such refusal and other pertinent information that may expedite disposition of the matter; and

(ii) Shall not proceed with such subcontract without the written authorization of the Grant Officer.

(3) The Recipient shall promptly notify the Grant Officer in writing upon the award of any subcontract at any tier containing a patent rights clause by identifying the subcontractor, the applicable patent rights clause, the work to be performed under the subcontract, and the dates of award and estimated completion. Upon request of the Grant Officer, the Recipient shall furnish a copy of such subcontract, and, no more frequently than annually, a listing of the subcontracts that have been awarded.

(4) The subcontractor will retain all rights provided for the Recipient in the clause under paragraph (g)(1)(i) or (ii) of this section, whichever is included in the subcontract, and the Recipient will not, as part of the consideration for awarding the subcontract, obtain rights in the subcontractor's subject inventions.

(5) Notwithstanding paragraph (g)(4) of this section, and in recognition of the Contractor's substantial contribution of funds, facilities and/or equipment to the work performed under this cooperative agreement, the Recipient is authorized, subject to the rights of NASA set forth elsewhere in this clause, to—

(i) Acquire by negotiation and mutual agreement rights to a subcontractor's subject inventions as the Recipient may deem necessary to obtaining and maintaining of such private support; and

(ii) Request, in the event of inability to reach agreement pursuant to paragraph (g)(5)(i) of this section that NASA invoke exceptional circumstances as necessary pursuant to 37 CFR 401.3(a)(2) if the prospective subcontractor is a small business firm or organization, or for all other organizations, request that such rights for the Recipient be included as an additional reservation in a waiver granted pursuant to 14 CFR part 1245, subpart 1. Any such requests to NASA should be prepared in consideration of the following guidance and submitted to the Contracting Officer.

(A) *Exceptional circumstances:* A request that NASA make an ''exceptional circumstances'' determination pursuant to 37 CFR 401.3(a)(2) must state the scope of rights sought by the Recipient pursuant to such determination; identify the proposed subcontractor and the work to be performed under the subcontract; and state the need for the determination.

(B) *Waiver petition:* The subcontractor should be advised that unless it requests a waiver of title pursuant to the NASA Patent Waiver Regulations (14 CFR part 1245, subpart 1), NASA will acquire title to the subject invention (42 U.S.C. 2457, as amended, sec. 305). If a waiver is not requested or granted, the Recipient may request a license from NASA (see licensing of NASA inventions, 14 CFR part 1245, subpart 2). A subcontractor requesting a waiver must follow the procedures set forth in the REQUESTS FOR WAIVER OF RIGHTS—LARGE BUSINESS provision.

(h) *Reporting on utilization of subject inventions.* The Recipient agrees to submit, on request, periodic reports no more frequently than annually on the utilization of a subject invention or on efforts at obtaining such utilization that are being made by the Recipient or its licensees or assignees. Such reports shall include information regarding the status of development, date of first commercial sale or use, gross royalties received by the Recipient, and such other data and information as the agency may reasonably specify. The Recipient also agrees to provide additional reports as may be requested by the agency in connection with any march-in proceeding under-taken by the agency in accordance with paragraph (i) of this section. As required by 35 U.S.C. 202(c)(5), the agency agrees it will not disclose such information to persons outside the Government without permission of the Recipient.

(i) *Preference for United States manufacture.* The Recipient agrees that any products embodying subject inventions or produced through the use of subject inventions shall be manufactured substantially in the United States. However, in individual cases, the requirement to manufacture substantially in the United States may be waived by the Associate Administrator for Procurement (Code HS) with the concurrence of the Associate General Counsel for Intellectual Property upon a showing by the Recipient that under the circumstances domestic manufacture is not commercially feasible.

(j) *March-in rights.* The Recipient agrees that, with respect to any subject invention in which it has acquired title, NASA has the right in accordance with the procedures in 37 CFR 401.6 and any supplemental regulations of the agency to require the Recipient, an assignee or exclusive licensee of a subject invention to grant a nonexclusive, partially exclusive, or exclusive license in any field of use to a responsible applicant or applicants, upon terms that are reasonable under the circumstances, and if the subcontractor, assignee, or exclusive licensee refuses such a request NASA has the right to grant such a license itself if the Federal agency determines that—

(1) Such action is necessary because the Recipient or assignee has not taken, or is not expected to take within a reasonable time, effective steps to achieve practical application of the subject invention in such field of use;

(2) Such action is necessary to alleviate health or safety needs which are not reasonably satisfied by the Recipient, assignee, or their licensees;

(3) Such action is necessary to meet requirements for public use specified by Federal regulations and such requirements are not reasonably satisfied by the Recipient, assignee, or licensees; or

(4) Such action is necessary because the agreement required by paragraph (i) of this section has not been obtained or waived or because a licensee of the exclusive right to use or sell any subject invention in the United States is in breach of such agreement.

(k) *Special provisions for Agreements with nonprofit organizations.* If the Recipient is a nonprofit organization, it agrees that—

(1) Rights to a subject invention in the United States may not be assigned without the approval of NASA, except where such assignment is made to an organization which has one of its primary functions the management of inventions; *provided,* that such assignee will be subject to the same provisions as the Recipient;

(2) The Recipient will share royalties collected on a subject invention with the inventor, including Federal employee co-inventors (when NASA deems it appropriate) when the subject invention is assigned in accordance with 35 U.S.C. 202(e) and 37 CFR 401.10;

(3) The balance of any royalties or income earned by the Recipient with respect to subject inventions, after payment of expenses (including payments to inventors) incidental to the administration of subject inventions will be utilized for the support of scientific research or education; and

(4) It will make efforts that are reasonable under the circumstances to attract licensees of subject inventions that are small business firms, and that it will give a preference to a small business firm when licensing a subject invention if the Recipient determines that the small business firm has a plan or proposal for marketing the invention which, if executed, is equally as likely to bring the invention to practical application as any plans or proposals from applicants that are not small business firms; *provided* that the Recipient is also satisfied that the small business firm has the capability and resources to carry out its plan or proposal. The decision whether to give a preference in any specific case will be at the discretion of the Recipient. However, the Recipient agrees that the Secretary of Commerce may review the Contractor's licensing program and decisions regarding small business applicants, and the Recipient will negotiate changes to its licensing policies, procedures, or practices with the Secretary of Commerce when the Secretary's review discloses that the Recipient could take reasonable steps to more effectively implement the requirements of this paragraph.

(l) A copy of all submissions or requests required by this clause, plus a copy of any reports, manuscripts, publications, or similar material bearing on patent matters, shall be sent to the installation Patent Counsel in

addition to any other submission requirements in the cooperative agreement. If any reports contain information describing a ''subject invention'' for which the Recipient has elected or may elect title, NASA will use reasonable efforts to delay public release by NASA or publication by NASA in a NASA technical series, in order for a patent application to be filed, provided that the Recipient identify the information and the ''subject invention'' to which it relates at the time of submittal. If required by the Grant Officer, the Recipient shall provide the filing date, serial number and title, a copy of the patent application, and a patent number and issue date for any ''subject invention'' in any country in which the Recipient has applied for patents.

[End of provision]

§ 1274.914 Requests for waiver of rights—large business.

Requests for Waiver of Rights—Large Business

October 2000

(a) In accordance with the NASA Patent Waiver Regulations, 14 CFR part 1245, subpart 1, waiver of rights to any or all inventions made or that may be made under a NASA agreement, contract or subcontract with other than a small business firm or a domestic nonprofit organization may be requested at different time periods. Advance waiver of rights to any or all inventions that may be made under a contract or subcontract may be requested prior to the execution of the agreement, contract or subcontract, or within 30 days after execution by the selected Recipient. In addition, waiver of rights to an identified invention made and reported under a agreement, contract or subcontract may be requested, even though a request for an advance waiver was not made or, if made, was not granted.

(b) Each request for waiver of rights shall be by petition to the Administrator and shall include an identification of the petitioner; place of business and address; if petitioner is represented by counsel, the name, address, and telephone number of the counsel; the signature of the petitioner or authorized representative; and the date of signature. No specific forms need be used, but the request should contain a positive statement that waiver of rights is being requested under the NASA Patent Waiver Regulations; a clear indication of whether the request is for an advance waiver or for a waiver of rights for an individual identified invention; whether foreign rights are also requested and, if so, the countries, and a citation of the specific section or sections of the regulations under which such rights are requested; and the name, address, and telephone number of the party with whom to communicate when the request is acted upon. Requests for advance waiver of rights should, preferably, be included with the proposal, but in any event in advance of negotiations.

(c) Petitions for advance waiver, prior to agreement execution, must be submitted to the Grant Officer. All other petitions will be submitted to the Patent Representative designated in the contract.

(d) Petitions submitted with proposals selected for negotiation of an agreement will be forwarded by the Grant Officer to the installation Patent Counsel for processing and then to the Inventions and Contributions Board. The Board will consider these petitions and where the Board makes the findings to support the waiver, the Board will recommend to the Administrator that waiver be granted, and will notify the petitioner and the Grant Officer of the Administrator's determination. The Grant Officer will be informed by the Board whenever there is insufficient time or information or other reasons to permit a decision to be made without unduly delaying the execution of the agreement. In the latter event, the petitioner will be so notified by the Grant Officer. All other petitions will be processed by installation Patent Counsel and forwarded to the Board. The Board shall notify the petitioner of its action and if waiver is granted, the conditions, reservations, and obligations thereof will be included in the Instrument of Waiver. Whenever the Board notifies a petitioner of a recommendation adverse to, or different from, the waiver requested, the petitioner may request reconsideration under procedures set forth in the Regulations.

[End of provision]

§ 1274.915 Restrictions on sale or transfer of technology to foreign firms or institutions.

Restrictions on Sale or Transfer of Technology to Foreign Firms or Institutions

October 2000

(a) The parties agree that access to technology developments under this Agreement by foreign firms or institutions must be carefully controlled. For purposes of this clause, a transfer includes a sale of the company, or sales or licensing of the technology. Transfers do not include—

(1) Sales of products or components;

(2) Licenses of software or documentation related to sales of products or components; or

(3) Transfers to foreign subsidiaries of the Recipient for purposes related to this Agreement.

(b) The Recipient shall provide timely notice to the Grant Officer in writing of any proposed transfer of technology developed under this Agreement. If NASA determines that the transfer may have adverse consequences to the national security interests of the United States, or to the establishment of a robust United States industry, NASA and the Recipient shall jointly endeavor to find alternatives to the proposed transfer which obviate or mitigate potential adverse consequences of the transfer.

[End of provision]

§ 1274.916 Liability and risk of loss.

Liability and Risk of Loss

October 2000

(a) With regard to activities undertaken pursuant to this agreement, neither party shall make any claim against the other, employees of the other, the other's related entities (*e.g.,* Contractors, subcontractors, etc.), or employees of the other's related entities for any injury to or death of its own employees or employees of its related entities, or for damage to or loss of its own property or that of its related entities, whether such injury, death, damage or loss arises through negligence or otherwise, except in the case of willful misconduct.

(b) To the extent that a risk of damage or loss is not dealt with expressly in this agreement, each party's liability to the other party arising out of this Agreement, whether or not arising as a result of an alleged breach of this Agreement, shall be limited to direct damages only, and shall not include any loss of revenue or profits or other indirect or consequential damages.

[End of provision]

§ 1274.917 Additional funds.

Additional Funds

October 2000

Pursuant to this agreement, NASA is providing a fixed amount of funding for activities to be undertaken under the terms of this cooperative agreement. NASA is under no obligation to provide additional funds. Under no circumstances shall the Recipient undertake any action which could be construed to imply an increased commitment on the part of NASA under this cooperative agreement.

[End of provision]

§ 1274.918 Incremental funding.

Incremental Funding

October 2000

(a) Of the award amount indicated on the cover page of this agreement, only the obligated amount indicated on the cover page of this agreement is available for payment. NASA anticipates making additional allotments of funds as required,

(b) These funds will be obligated as appropriated funds become available without any action required of the Recipient. NASA is not obligated to make payments in excess of the total funds obligated.

[End of provision]

§ 1274.919 Cost principles and accounting standards.

Cost Principles and Accounting Standards

October 2000

The expenditure of Government funds by the Recipient and the allowability of costs recognized as a resource contribution by the Recipient (See clause entitled ''Resource Sharing Requirements'') shall be governed by the FAR cost principles, 48 CFR part 31. (If the Recipient is a consortium which includes non-commercial firm members, cost allowability for those members will be determined as follows: Allowability of costs incurred by State, local or federally-recognized Indian tribal governments is determined in accordance with the provisions of OMB Circular A–87, ''Cost Principles for State and Local Governments.'' The allowability of costs incurred by non-

profit organizations is determined in accordance with the provisions of OMB Circular A–122, ''Cost Principles for Non-Profit Organizations.'' The allowability of costs incurred by institutions of higher education is determined in accordance with the provisions of OMB Circular A–21, ''Cost Principles for Educational Institutions.'' The allowability of costs incurred by hospitals is determined in accordance with the provisions of appendix E of 45 CFR part 74, ''Principles for Determining Costs Applicable to Research and Development Under Grants and Contracts with Hospitals.'') Recipient's method for accounting for the expenditure of funds must be consistent with Generally Accepted Accounting Principles.

[End of provision]

§ 1274.920 Responsibilities of the NASA Technical Officer.

Responsibilities of the NASA Technical Officer

October 2000

(a) The NASA Grant Administrator and Technical Officer for this cooperative agreement are identified on the cooperative agreement cover sheet.

(b) The Grant Specialist shall serve as NASA's authorized representative for the administrative elements of all work to be performed under the agreement.

(c) The Technical Officer shall have the authority to issue written Technical Advice which suggests redirecting the project work (*e.g.,* by changing the emphasis among different tasks), or pursuing specific lines of inquiry likely to assist in accomplishing the effort. The Technical Officer shall have the authority to approve or disapprove those technical reports, plans, and other technical information the Recipient is required to submit to NASA for approval. The Technical Officer is not authorized to issue and the Recipient shall not follow any Technical Advice which constitutes work which is not contemplated under this agreement; which in any manner causes an increase or decrease in the resource sharing or in the time required for performance of the project; which has the effect of changing any of the terms or conditions of the cooperative agreement; or which interferes with the Recipient's right to perform the project in accordance with the terms and conditions of this cooperative agreement.

[End of provision]

§ 1274.921 Publications and reports: Non-proprietary research results.

Publications and Reports: Non-Proprietary Research Results

October 2000

(a) NASA encourages the widest practicable dissemination of research results at all times during the course of the investigation consistent with the other terms of this agreement.

(b) All information disseminated as a result of the cooperative agreement shall contain a statement which acknowledges NASA's support and identifies the cooperative agreement by number.

(c) Prior approval by the NASA Technical Officer is required only where the Recipient requests that the results of the research be published in a NASA scientific or technical publication. Two copies of each draft publication shall accompany the approval request.

(d) Reports shall contain full bibliographic references, abstracts of publications and lists of all other media in which the research was discussed. The Recipient shall submit the following technical reports:

(1) A progress report for every year of the cooperative agreement (except the final year). Each report is due 60 days before the anniversary date of the cooperative agreement and shall describe research accomplished during the report period.

(2) A summary of research is due by 90 days after the expiration date of the cooperative agreement, regardless of whether or not support is continued under another cooperative agreement. This report is intended to summarize the entire research accomplished during the duration of the cooperative agreement.

(e) Progress reports and summaries of research shall display the following on the first page:

(1) Title of the cooperative agreement.

(2) Type of report.

(3) Period covered by the report.

(4) Name and address of the Recipient's organization.

(5) Cooperative agreement number.

(f) An original and two copies, one of which shall be of suitable quality to permit micro-reproduction, shall be sent as follows:

(1) Original—Grant Officer.

(2) Copy—Technical Officer.

(3) Micro-reproducible copy—NASA Center for Aerospace Information (CASI), Parkway Center, Attn: Document Processing Section, 7121 Standard Drive, Hanover, MD 21076.

(g) The requirements set forth under this provision may be modified by the Grant Officer based on specific report needs for the particular grant or cooperative agreement.

[End of provision]

§ 1274.922 Suspension or termination.

Suspension or Termination

October 2000

(a) This cooperative agreement may be suspended or terminated in whole or in part by the Recipient or by NASA after consultation with the other party. NASA may terminate the agreement, for example, if the Recipient is not making anticipated technical progress, if the Recipient materially fails to comply with the terms of the agreement, if the Recipient materially changes the objective of the agreement, or if appropriated funds are not available to support the program.

(b) Upon fifteen (15) days written notice to the other party, either party may temporarily suspend the cooperative agreement, pending corrective action or a decision to terminate the cooperative agreement. The notice should express the reasons why the agreement is being suspended.

(c) In the event of termination by either party, the Recipient shall not be entitled to additional funds or payments except as may be required by the Recipient to meet NASA's share of commitments which had in the judgment of NASA become firm prior to the effective date of termination and are otherwise appropriate. In no event, shall these additional funds or payments exceed the amount of the next payable milestone billing amount.

[End of provision]

§ 1274.923 Equipment and other property.

Equipment and Other Property

October 2000

(a) NASA cooperative agreements permit acquisition of special purpose equipment required for the conduct of research. Acquisition of special purpose equipment costing in excess of $5,000 and not included in the approved proposal budget requires the prior approval of the Grant Officer unless the item is merely a different model of an item shown in the approved proposal budget.

(b) Recipients may not purchase, as a direct cost to the cooperative agreement, items of general purpose equipment, examples of which include but are not limited to office equipment and furnishings, air conditioning equipment, reproduction and printing equipment, motor vehicles, and automatic data processing equipment. If the Recipient requests an exception, the Recipient shall submit a written request for Grant Officer approval, prior to purchase by the Recipient, stating why the Recipient cannot charge the general purpose equipment to indirect costs.

(c) Under no circumstances shall cooperative agreement funds be used to acquire land or any interest therein, to acquire or construct facilities (as defined in 48 CFR (FAR) 45.301), or to procure passenger carrying vehicles.

(d) The government shall have title to equipment and other personal property acquired with government funds. Such property shall be disposed of pursuant to 48 CFR (FAR) 45.603. The Recipient shall have title to equipment and other personal property acquired with Recipient funds. Such property shall remain with the Recipient at the conclusion of the cooperative agreement.

(e) Title to Government furnished equipment (including equipment, title to which has been transferred to the Government prior to completion of the work) will remain with the Government.

(f) The Recipient shall establish and maintain property management standards for Government property and otherwise manage such property as set forth in 48 CFR (FAR) 45.5 and 48 CFR (NFS) 1845.5.

(g) Recipients shall submit annually a NASA Form 1018, NASA Property in the Custody of Contractors, in accordance with the instructions on the form, the provisions of 18 CFR (NFS) 1845.71 and any supplemental instructions that may be issued by NASA for the current reporting period. The original NF 1018 shall be submitted to the center Deputy Chief Financial Officer (Finance) with three copies sent concurrently to the center Industrial Property Officer. The annual reporting period shall be from October 1 of each year through September 30

of the following year. The report shall be submitted in time to be received by October 31. Negative reports (*i.e.* no reportable property) are required. The information contained in the reports in entered into the NASA accounting system to reflect current asset values for agency financial statement purposes. Therefore, it is essential that required reports be received no later than October 31. A final report is required within 30 days after expiration of the agreement.

[End of provision]

§ 1274.924 Civil rights.

Civil Rights

October 2000

Work on NASA cooperative agreements is subject to the provisions of Title VI of the Civil Rights Act of 1964 (Pub. L. 88–352; 42 U.S.C. 2000d–1), Title IX of the Education Amendments of 1972 (20 U.S.C. 1680 *et seq.*), section 504 of the Rehabilitation Act of 1973, as amended (29 U.S.C. 794), the Age Discrimination Act of 1975 (42 U.S.C. 6101 *et seq.*), and the NASA implementing regulations (14 CFR parts 1250, 1251, 1252 and 1253).

[End of provision]

§ 1274.925 Subcontracts.

Subcontracts

October 2000

(a) Recipients are not authorized to issue grants or cooperative agreements.

(b) NASA Grant Officer consent is required for subcontracts over $100,000, if not accepted by NASA in the original proposal. The Recipient shall provide the following information to the Grant Officer:

(1) A copy of the proposed subcontract.

(2) Basis for subcontractor selection.

(3) Justification for lack of competition when competitive bids or offers are not obtained.

(4) Basis for award cost or award price.

(c) The Recipient shall utilize small business concerns, small disadvantaged business concerns, Historically Black Colleges and Universities, minority educational institutions, and women-owned small business concerns as subcontractors to the maximum extent practicable.

[End of provision]

§ 1274.926 Clean Air-Water Pollution Control Acts.

Clean Air-Water Pollution Control Acts

October 2000

If this cooperative agreement or supplement thereto is in excess of $100,000, the Recipient agrees to notify the Grant Officer promptly of the receipt, whether prior or subsequent to the Recipient's acceptance of this cooperative agreement, of any communication from the Director, Office of Federal Activities, Environmental Protection Agency (EPA), indicating that a facility to be utilized under or in the performance of this cooperative agreement or any subcontract thereunder is under consideration to be listed on the EPA ''List of Violating Facilities'' published pursuant to 40 CFR part 15. By acceptance of a cooperative agreement in excess of $100,000, the Recipient—

(a) Stipulates that any facility to be utilized thereunder is not listed on the EPA ''List of Violating Facilities'' as of the date of acceptance;

(b) Agrees to comply with all requirements of section 114 of the Clean Air Act, as amended (42 U.S.C. 1857 *et seq.* as amended by Pub. L. 91–604) and section 308 of the Federal Water Pollution Control Act, as amended (33 U.S.C. 1251 *et seq.* as amended by Pub. L. 92–500) relating to inspection, monitoring, entry, reports and information, and all other requirements specified in the aforementioned sections, as well as all regulations and guidelines issued thereunder after award of and applicable to the cooperative agreement; and

(c) Agrees to include the criteria and requirements of this clause in every subcontract hereunder in excess of $100,000, and to take such action as the Grant Officer may direct to enforce such criteria and requirements.

[End of provision]

§ 1274.927 Debarment and suspension and Drug-Free Workplace.

Debarment and Suspension and Drug-Free Workplace

October 2000

NASA cooperative agreements are subject to the provisions of 14 CFR Part 1265, Government-wide Debarment and Suspension (Nonprocurement) and Government-wide requirements for Drug-Free Workplace, unless excepted by 14 CFR 1265.110 or 1265.610.

[End of provision]

§ 1274.928 Foreign national employee investigative requirements.

Foreign National Employee Investigative Requirements

October 2000

(a) The Recipient shall submit a properly executed Name Check Request (NASA Form 531) and a completed applicant fingerprint card (Federal Bureau of Investigation Card FD–258) for each foreign national employee requiring access to a NASA Installation. These documents shall be submitted to the Installation's Security Office at least 75 days prior to the estimated duty date. The NASA Installation Security Office will request a National Agency Check (NAC) for foreign national employees requiring access to NASA facilities. The NASA Form 531 and fingerprint card may be obtained from the NASA Installation Security Office.

(b) The Installation Security Office will request from NASA Headquarters, Office of External Relations (Code I), approval for each foreign national's access to the Installation prior to providing access to the Installation. If the access approval is obtained from NASA Headquarters prior to completion of the NAC and performance of the cooperative agreement requires a foreign national to be given access immediately, the Technical Officer may submit an escort request to the Installation's Chief of Security.

[End of provision]

§ 1274.929 Restrictions on lobbying.

Restrictions on Lobbying

October 2000

This award is subject to the provisions of 14 CFR Part 1271 ''New Restrictions on Lobbying.''

[End of provision]

§ 1274.930 Travel and transportation.

Travel and Transportation

October 2000

(a) For travel funded by the government under this agreement, section 5 of the International Air Transportation Fair Competitive Practices Act of 1974 (49 U.S.C. 40118) (Fly America Act) requires the Recipient to use U.S.-flag air carriers for international air transportation of personnel and property to the extent that service by those carriers is available.

(b) Department of Transportation regulations, 49 CFR part 173, govern Recipient shipment of hazardous materials and other items.

[End of provision]

§ 1274.931 Electronic funds transfer payment methods.

Electronic Funds Transfer Payment Methods

October 2000

Payments under this cooperative agreement will be made by the Government by electronic funds transfer through the Treasury Fedline Payment System (FEDLINE) or the Automated Clearing House (ACH), at the option of the Government. After award, but no later than 14 days before an invoice is submitted, the Recipient shall designate a financial institution for receipt of electronic funds transfer payments, and shall submit this designation to the Grant Officer or other Government official, as directed.

(a) For payment through FEDLINE, the Recipient shall provide the following information:

(1) Name, address, and telegraphic abbreviation of the financial institution receiving payment.

(2) The American Bankers Association 9-digit identifying number for wire transfers of the financing institution receiving payment if the institution has access to the Federal Reserve Communication System.

(3) Payee's account number at the financial institution where funds are to be transferred.

(4) If the financial institution does not have access to the Federal Reserve Communications System, name, address, and telegraphic abbreviation of the correspondent financial institution through which the financial institution receiving payment obtains wire transfer activity. Provide the telegraphic abbreviation and American Bankers Association identifying number for the correspondent institution.

(b) For payment through ACH, the Recipient shall provide the following information:

(1) Routing transit number of the financial institution receiving payment (same as American Bankers Association identifying number used for FEDLINE).

(2) Number of account to which funds are to be deposited.

(3) Type of depositor account (''C'' for checking, ''S'' for savings).

(4) If the Recipient is a new enrollee to the ACH system, a ''Payment Information Form,'' SF 3881, must be completed before payment can be processed.

(c) In the event the Recipient, during the performance of this cooperative agreement, elects to designate a different financial institution for the receipt of any payment made using electronic funds transfer procedures, notification of such change and the required information specified above must be received by the appropriate Government official 30 days prior to the date such change is to become effective.

(d) The documents furnishing the information required in this clause must be dated and contain the signature, title, and telephone number of the Recipient official authorized to provide it, as well as the Recipient's name and contract number.

(e) Failure to properly designate a financial institution or to provide appropriate payee bank account information may delay payments of amounts otherwise properly due.

[End of provision]

§ 1274.932 Retention and examination of records.

Retention and Examination of Records

October 2000

Financial records, supporting documents, statistical records, and all other records (or microfilm copies) pertinent to this cooperative agreement shall be retained for a period of 3 years, except that records for non-expendable property acquired with cooperative agreement funds shall be retained for 3 years after its final disposition and, if any litigation, claim, or audit is started before the expiration of the 3-year period, the records shall be retained until all litigation, claims, or audit findings involving the records have been resolved. The retention period starts from the date of the submission of the final invoice. The Administrator of NASA, the Comptroller General of the United States, the Office of Inspector General, or any of their duly authorized representatives, shall have access to any pertinent books, documents, papers, and records of the Recipient and of subcontractors to make audits, examinations, excerpts, and transcripts. All provisions of this clause shall apply to any subcontractor performing substantive work under this cooperative agreement.

[End of provision]

§ 1274.933 Summary of recipient reporting responsibilities.

Summary of Recipient Reporting Responsibilities

October 2000

This cooperative agreement requires the recipient to submit a number of reports. These reporting requirements are summarized below. In the event of a conflict between this provision and other provisions of the cooperative agreement requiring reporting, the other provisions take precedence.

[The Grant Officer may add/delete reporting requirements as appropriate.]

Report	Frequency	Reference
Report of Joint NASA/Recipient Inventions.	As required	§ 1274.911 Patent Rights (Paragraph (b)(4)).
Interim Report of Reportable Items	Every 12 months	Patent Rights—Retention by the Recipient (Large Business) (Paragraph (e)(3)(i)).
Final Report of Reportable Items	3 months after completion	§ 1274.912 Patent Rights—Retention by the Recipient (Large Business) (Paragraph (e)(3)(ii)).
Disclosure of Subject Inventions	Within 2 months after inventor discloses it to Recipient.	Patent Rights—Retention by the Recipient (Large Business) (Paragraph (e)(2)) or § 1274.913 Patent Rights—Retention by the Recipient (SmallBusiness) (Paragraph (c)(1)).
Election of Title to a Subject Invention	1 year after disclosure of the subject invention if a statutory bar exists, otherwise within 2 years.	Patent Rights—Retention by the Recipient (Small Business) (Paragraph (c)(2)).
Listing of Subject Inventions	Every 12 months from the date of the agreement.	Patent Rights—Retention by the Recipient (Small Business) (Paragraph (f)(5)(i)).
Subject Inventions Final Report	Prior to close-out of the agreement	§ 1274.913 Retention by the Recipient (Small Business) (Paragraph (f)(5)(ii).
Notification of Decision to Forego Patent Protection.	30 days before expiration of the response period.	Patent Rights—Retention by the Recipient (Small Business) (Paragraph (f)(3)).
Notification of a Subcontract Award	Promptly upon award of a subcontract	Patent Rights—Retention by the Recipient (Large Business) (Paragraph (g)(3)) or § 1274.913 Patent Rights—Retention by the Recipient (Small Business) (Paragraph (g)(3).
Utilization of Subject Invention	Annually	Patent Rights—Retention by the Recipient (Small Business) (Paragraph (h)).
Notice of Proposed Transfer of Technology.	Prior to transferring technology to foreign firm or institution.	§ 1274.915 Restrictions on Sale or Transfer of Technology to Foreign Firms or Institutions (Paragraph (b)).
Progress Report	60 days prior to the anniversary date of the agreement (except final year).	Publications and Reports: Non-Proprietary Research Results (Paragraph (d)(1)).
Summary of Research	90 days after completion of agreement	Publications and Reports: Non-Proprietary Research Results (Paragraph (d)(2)).
NASA Form 1018 Property in the Custody of Contractors.	Annually by October 31	Equipment and Other Property (Paragraph (g)).
NASA Form 1018 Property in the Custody of Contractors.	60 days after expiration date of agreement.	Equipment and Other Property (Paragraph (g)).

[End of provision]

§ 1274.934 Safety.

Safety

October 2000

(a) The Recipient shall act responsibly in matters of safety and shall take all reasonable safety measures in performing under this grant or cooperative agreement. The Recipient shall comply with all applicable federal, state, and local laws relating to safety. The Recipient shall maintain a record of, and will notify the NASA Grant Officer of any accident involving death, disabling injury or substantial loss of property in performing this grant or cooperative agreement. The Recipient will advise NASA of hazards that come to its attention as a result of the work performed.

(b) Where the work under this grant or cooperative agreement involves flight hardware, the hazardous aspects, if any, of such hardware will be identified, in writing, by the recipient. Compliance with this provision by subcontractors shall be the responsibility of the Recipient.

[End of provision]

Appendix to Part 1274—Listing of Exhibits

Exhibit A to Part 1274—Contract Provisions

All contracts awarded by a recipient, including small purchases, shall contain the following provisions if applicable:

1. *Equal Employment Opportunity.* All contracts shall contain a provision requiring compliance with Executive Order 11246, ''Equal Employment Opportunity,'' as amended by Executive Order 11375, ''Amending Executive Order 11246 Relating to Equal Employment Opportunity,'' and as supplemented by regulations at 41 CFR Chapter 60, ''Office of Federal Contract Compliance Programs, Equal Employment Opportunity, Department of Labor.''

2. *Copeland ''Anti-Kickback'' Act (18 U.S.C. 874 and 40 U.S.C. 276c).* All contracts in excess of $50,000 for construction or repair awarded by recipients and subrecipients shall include a provision for compliance with the Copeland ''Anti-Kickback'' Act (18 U.S.C. 874), as supplemented by Department of Labor regulations (29 CFR part 3, ''Contractors and Subcontractors on Public Building or Public Work Financed in Whole or in Part by Loans or Grants from the United States''). The Act provides that each recipient or subrecipient shall be prohibited from inducing, by any means, any person employed in the construction, completion, or repair of public work, to give up any part of the compensation to which he is otherwise entitled. The recipient shall report all suspected or reported violations to NASA.

3. *Contract Work Hours and Safety Standards Act (40 U.S.C. 327–333).* Where applicable, all contracts awarded by recipients in excess of $2,000 for construction contracts and in excess of $50,000 for other contracts, other than contracts for commercial items, that involve the employment of mechanics or laborers shall include a provision for compliance with Sections 102 and 107 of the Contract Work Hours and Safety Standards Act (40 U.S.C. 327–333), as supplemented by Department of Labor regulations (29 CFR part 5). Under subsection 102 of the Act, each recipient shall be required to compute the wages of every mechanic and laborer on the basis of a standard work week of 40 hours. Work in excess of the standard work week is permissible provided that the worker is compensated at a rate of not less than 1½ times the basic rate of pay for all hours worked in excess of 40 hours in the work week. Section 107 of the Act is applicable to construction work and provides that no laborer or mechanic shall be required to work in surroundings or under working conditions which are unsanitary, hazardous or dangerous. These requirements do not apply to the purchases of supplies or materials or articles ordinarily available on the open market, or contracts for transportation or transmission of intelligence.

4. *Rights to Inventions Made Under a Contract or Agreement.* Contracts or agreements for the performance of experimental, developmental, or research work shall provide for the rights of the Federal Government and the recipient in any resulting invention in accordance with 37 CFR part 401, ''Rights to Inventions Made by Nonprofit Organizations and Small Business Firms Under Government Grants, Contracts and Cooperative Agreements,'' and any implementing regulations issued by the awarding agency.

5. *Clean Air Act (42 U.S.C. 7401 et seq.) and the Federal Water Pollution Control Act (33 U.S.C. 1251 et seq.), as amended.* Contracts, other than contracts for commercial items, of amounts in excess of $100,000 shall contain a provision that requires the recipient to agree to comply with all applicable standards, orders or regulations issued pursuant to the Clean Air Act (42 U.S.C. 7401 *et seq.*) and the Federal Water Pollution Control Act as amended (33 U.S.C. 1251 *et seq.*). Violations shall be reported to NASA and the Regional Office of the Environmental Protection Agency (EPA).

6. *Byrd Anti-Lobbying Amendment (31 U.S.C.1352).* Contractors who apply or bid for an award of $100,000 or more shall file the required certification. Each tier certifies to the tier above that it will not and has not used Federal appropriated funds to pay any person or organization for influencing or attempting to influence an officer or employee of any agency, a member of Congress, officer or employee of Congress, or an employee of a member of Congress in connection with obtaining any Federal contract, grant or any other award covered by 31 U.S.C. 1352. Each tier shall also disclose any lobbying with non-Federal funds that takes place in connection with obtaining any Federal award. Such disclosures are forwarded from tier to tier up to the recipient.

7. *Debarment and Suspension (Executive Orders 12549 and 12689).* No contract shall be made to parties listed on the General Services Administration's List of Parties Excluded from Federal Procurement or Nonprocurement Programs in accordance with Executive Orders 12549 and 12689, ''Debarment and Suspension.'' This list contains the names of parties debarred, suspended, or otherwise excluded by agencies, and contractors declared ineligible under statutory or regulatory authority other than Executive Order 12549. Contractors with awards that exceed the small purchase threshold shall provide the required certification regarding its exclusion status and that of its principal employees.

Exhibit B to Part 1274—Reports

1. *Individual procurement action report (NASA Form 507).* The grant officer is responsible for submitting NASA Form 507 for all cooperative agreement actions.

2. *Property reporting.* As provided in paragraph (g) of § 1274.923, an annual NASA Form (NF) 1018, NASA Property in the Custody of Contractors, will be submitted by October 31 of each year. Negative annual reports are required. A final report is required within 30 days after expiration of the agreement.

3. *Disclosure of lobbying activities (SFLLL).* (a) Grant officers shall provide one copy of each SF LLL furnished under 14 CFR 1271.110 to the procurement officer for transmittal to the Director, Analysis Division (Code HC).

(b) Suspected violations of the statutory prohibitions implemented by 14 CFR part 1271 shall be reported to the Director, Contract Management Division (Code HK).

[FR Doc. 00–26365 Filed 10–18–00; 8:45 am]

BILLING CODE 7510–01–P

Federal Register

Thursday,
October 19, 2000

Part IV

Department of Labor

Pension and Welfare Benefits Administration

29 CFR Part 2520

Small Pension Plan Security Amendments; Final Rule

DEPARTMENT OF LABOR

Pension and Welfare Benefits Administration

29 CFR Part 2520

RIN 1210–AA73

Small Pension Plan Security Amendments

AGENCY: Pension and Welfare Benefits Administration, Department of Labor.

ACTION: Final rule.

SUMMARY: This document contains a final rule amending the regulations governing the circumstances under which small pension plans are exempt from the requirements to engage an independent qualified public accountant (IQPA) and to include a report of the accountant as part of the plan's annual report under Title I of the Employee Retirement Income Security Act of 1974, as amended (ERISA). These regulatory amendments provide a waiver of the IQPA annual examination and report requirements for employee benefit plans with fewer than 100 participants at the beginning of the plan year. The amendments being made by this final rule are designed to increase the security of assets in small pension plans by conditioning the waiver on enhanced disclosure of information to participants and beneficiaries and, in certain instances, improved fidelity bonding requirements. The amendments do not affect the waiver for small welfare plans (such as group health plans) under 29 CFR 2520.104–46. Conforming amendments are also being made to the simplified annual reporting requirements for small pension plans specified in 29 CFR 2520.104–41. These amendments affect participants and beneficiaries covered by small pension plans, sponsors and administrators of small pension plans, and providers of investment and administrative services to small pension plans.

DATES: Effective Date: This rule is effective December 18, 2000. Applicability Date: The amendments made by this rule are applicable as of the first plan year beginning after April 17, 2001.

FOR FURTHER INFORMATION CONTACT: John Keene, Office of Regulations and Interpretations, Pension and Welfare Benefits Administration, Room N–5669, 200 Constitution Avenue, N.W., Washington, DC 20210, (202) 219–8521. This is not a toll-free number.

SUPPLEMENTARY INFORMATION: On December 1, 1999, the Department published in the **Federal Register** (64 FR 67436) proposed amendments to the regulations governing the circumstances under which small pension plans are exempt from the requirements to engage an independent qualified public accountant and to include an opinion of the accountant as part of the plan's annual report under Title I of ERISA. The Department invited interested persons to submit written comments on the proposed amendments. The Department received 19 written comments from the public regarding the proposal. The following discussion summarizes the proposed regulation and the major issues raised by the commenters. It also explains the Department's reasons for the modifications reflected in the final regulation that is being published with this notice.

A. Background

In general, the administrator of an employee benefit plan required to file an annual report under Title I of ERISA must engage an IQPA and include the IQPA's opinion as part of the plan's annual report. These annual reporting requirements can be satisfied by filing the Form 5500 ''Annual Return/Report of Employee Benefit Plan'' in accordance with its instructions and related regulations.[1] The requirements governing the content of the opinion and report of the IQPA are set forth in section 103(a)(3)(A) of ERISA and 29 CFR 2520.103–1(b). Section 104(a)(2)(A) of ERISA permits the Department to prescribe, by regulation, simplified annual reports for pension plans with fewer than 100 participants, and section 103(a)(3)(A) permits the Department to waive the IQPA requirements for pension plans for which such simplified annual reporting has been prescribed. Section 104(a)(3) of ERISA permits the Department to prescribe exemptions and simplified reporting and disclosure requirements for welfare plans. In accordance with the Department's authority under sections 104(a)(2)(A) and 104(a)(3) of ERISA, the Department adopted, at 29 CFR 2520.104–41, simplified annual reporting requirements for pension and welfare benefit plans with fewer than 100 participants. In addition, the Department, at 29 CFR 2520.104–46, prescribed for such small plans a waiver from the requirements of section 103(a)(3)(A) to engage an IQPA and to include the opinion of the accountant as part of the plan's annual report.

Since the adoption of § 2520.104–46 in 1976, the amount of assets held in small pension plans has risen dramatically and small pension plans have become increasingly important retirement savings vehicles for a growing number of American workers. Media coverage of a particularly egregious case involving misappropriation of a small pension plan's assets over several years focused national attention on the potential vulnerability of small pension plans to fraud and abuse. The Department has had experience with other small pension plan cases involving service providers, administrators or other fiduciaries attempting to conceal fraud or misappropriations by falsifying financial and other information provided to plan sponsors, trustees, and participants. Although such cases are rare and legal remedies often can be pursued in an effort to recover lost assets, the Department concluded, given the increasing extent to which workers are depending on their employment-based pension plans as a primary source of retirement income, that it is appropriate to take steps to improve the security of assets in small pension plans.

One approach the Department considered to improve the security of assets in small pension plans was to require all such plans to comply with the audit requirements of section 103(a)(3)(A) of ERISA. While subjecting the assets of small pension plans to an annual audit would, in the view of the Department, provide a high degree of certainty that the assets reported on a plan's annual report are actually available to pay benefits, the Department recognizes that the costs attendant to such a requirement may be significant for many plans and plan sponsors. Consistent with the Department's goal of encouraging pension plan establishment and maintenance, particularly in the small business community, the Department concluded that engaging an accountant should not be the only means by which the security of small plan pension assets can be improved. Rather, in developing the proposed regulation, the Department attempted to balance the interest in providing secure retirement savings for participants and beneficiaries with the interest in minimizing costs and burdens on small pension plans and the sponsors of those plans.

In assessing alternatives to a mandatory audit requirement, the Department concluded that a three-pronged approach—focusing on (1) who holds the plan's assets, (2) enhanced disclosure to participants and beneficiaries and, (3) in limited situations, an improved bonding

[1] See sections 101(b) and 103 of ERISA, and 29 CFR 2520.103–1.

requirement—could enhance the level of security and accountability while keeping administrative burdens and costs to a minimum by building on current recordkeeping, disclosure and bonding requirements and practices. In general, the Department believes that statements regarding plan assets prepared by certain regulated financial institutions (such as banks, insurance companies, mutual funds, and registered securities brokers), if made available to participants and beneficiaries, provide a reliable means by which participants and beneficiaries can independently confirm that the assets reported by the plan as being available to pay benefits as of the end of the plan year are, in fact, available according to the books and records of the regulated financial institution. Such disclosure, in the Department's view, reduces the likelihood of losses over long periods due to acts of fraud or dishonesty. The Department also believes that supplemental bonding requirements will serve to reduce the risk of loss due to acts of fraud or dishonestly where a substantial percentage of a plan's assets are held by entities that may not be subject to state or federal regulatory oversight. This approach was set forth as proposed new conditions for obtaining a waiver under § 2520.104–46 of the requirements to engage an IQPA and include the IQPA's opinion as part of the plan's annual report.

B. Summary of the Proposal

The first part of the proposal focused on the extent to which a plan's assets are held by regulated financial institutions. See Proposed § 2520.104–46(b)(1)(i)(A). The proposal used the term ''qualifying plan assets'' in applying the conditions of the waiver. ''Qualifying plan assets'' were defined to include any assets held by: a bank or similar financial institution as defined in § 2550.408b-4(c); an insurance company qualified to do business under the laws of a state; an organization registered as a broker-dealer under the Securities Exchange Act of 1934; or any other organization authorized to act as a trustee for individual retirement accounts under section 408 of the Internal Revenue Code. The term ''qualifying plan assets'' also included assets that the Department believes present little risk of loss to participants and beneficiaries as a result of acts of fraud or dishonesty: participant loans meeting the requirements of section 408(b)(1) of ERISA and qualifying employer securities as defined in section 407(d)(5) of ERISA. See Proposed § 2520.104–46(b)(1)(ii).

The proposal provided, with respect to each plan year for which the waiver is claimed, that at least 95% of the assets of the plan must constitute ''qualifying plan assets'' or that any person who handles assets that do not constitute ''qualifying plan assets'' is covered by a bond meeting the requirements of section 412 of ERISA, except that the amount of the bond is not less than the value of such assets.[2] The 95% test was provided in recognition of the fact that some small plans may have assets (such as limited partnership or real estate interests) held by parties that are not regulated financial institutions. Only where more than 5% of a plan's assets do not constitute ''qualifying plan assets'' would the bonding component of the proposal apply.

The proposal required that the percentage of a plan's assets that constitute ''qualifying plan assets'' and, as appropriate, the amount of supplemental bond coverage necessary to comply with the regulation must be determined for each plan year for which the waiver is claimed. Accordingly, the administrator of a plan electing the waiver must make the required determinations as of the beginning of the plan year. The proposal provided that, for purposes of this requirement, the required determinations are to be made in a manner consistent with the requirements of section 412. Inasmuch as a determination that more than 5% of a plan's assets do not constitute ''qualifying plan assets'' may necessitate an increase in the amount of the plan's section 412 bond, the Department concluded that, assuming the administrator does not elect to engage an IQPA, the determination of ''qualifying plan assets'' should be made on the same basis as the required bond.[3]

Under the second part of the proposal, the waiver of the IQPA requirements was further conditioned on the disclosure of certain information to participants and beneficiaries. Specifically, § 2520.104–46(b)(1)(i)(B) required that the summary annual report (SAR) of a plan electing the waiver include, in addition to the other information required by § 2520.104b–10: (1) The name of each institution holding ''qualifying plan assets'' and the amount of such assets held by each institution as of the end of the plan year; (2) the name of the surety company issuing the bond, if the plan has more than 5% of its assets in non-qualifying plan assets; (3) a notice indicating that participants and beneficiaries may, upon request and without charge, examine, or receive copies of, evidence of the required bond and statements received from each institution holding qualifying assets that describe the assets held by the institution as of the end of the plan year; and (4) a notice stating that participants and beneficiaries should contact the Regional Office of the U.S. Department of Labor's Pension and Welfare Benefits Administration if they are unable to examine or obtain copies of statements received from each institution holding qualifying assets or evidence of the required bond, if applicable.

Nothing in the proposal affected the obligation of a plan that would be eligible for the audit waiver to file a Form 5500 ''Annual Return/Report of Employee Benefit Plan,'' including any schedules or statements required by the instructions to the form. On the other hand, the proposal made it clear that a plan electing to file a Form 5500 as a small pension plan pursuant to the ''80 to 120 rule'' in § 2520.103–1(d) may claim the audit waiver in the same manner and under the same conditions as a plan with fewer than 100 participants.[4]

Finally, conforming amendments to the simplified annual reporting provisions in § 2520.104–41 were included in the proposal to clarify that, although other simplified reporting options would continue to be available, if an employee benefit plan with fewer than 100 participants does not meet the criteria set forth in § 2520.104–46, it would be required to engage an IQPA to conduct an examination of the financial statements of the plan, to include with the plan's annual report the financial statements, notes and schedules prescribed in section 103(b) of ERISA and 29 CFR 2520.103–1, and to include within the plan's annual report a report of an IQPA as prescribed in section

[2] Section 412 of ERISA and the regulations issued thereunder, 29 CFR 2550.412–1, 2580.412–1 *et seq.*, set forth the bonding requirements generally applicable to ERISA-covered plans.

[3] In this regard, 29 CFR 2580.412–14 requires that the amount of the section 412 bond be determined by reference to the preceding reporting year. In the case of new plans, with respect to which there is no preceding report year, § 2580.412–15 provides procedures for making estimates for the current year.

[4] Under the ''80 to 120 rule,'' if the number of participants covered under the plan as of the beginning of the plan year is between 80 and 120, and an annual report was filed as a small plan filer for the prior year, the plan administrator may elect to continue to file as a small plan filer and claim the audit waiver even though the plan covered more than 100 participants as of the beginning of the plan year. Conversely, a plan with fewer than 100 participants as of the beginning of the plan year that elects to continue to file a Form 5500 as a large plan pursuant to the ''80 to 120 rule'' is not eligible to claim the waiver afforded by this section to small plan filers.

103(a)(3)(A) of ERISA and 29 CFR 2520.103–1(b)(5).

C. Summary of Public Comments

As noted above, the Department received 19 written comments regarding the proposal. The commenters generally expressed the view that the Department's proposal, for the most part, struck a reasonable balance between enhancing the level of security and accountability for small pension plan assets and minimizing administrative burdens and costs on plans and plan sponsors. The commenters also generally concluded that, although the proposal will impose new costs on some small employers, the proposal was structured so that costs are generally proportionate to the risk and the additional burdens should be modest. The following discussion summarizes the major issues raised by the commenters and explains the Department's reasons for the modifications reflected in the final regulation.

1. Definition of Qualifying Plan Assets

Several commenters asked the Department to clarify the terms ''held by'' and ''hold'' as used in describing the requirements that assets must be held by certain regulated financial institutions and that year-end statements regarding plan assets must be from the financial institution holding the plan's assets. See § 2520.104–46(b)(1)(i)(B)(*1*), (b)(1)(ii)(C), and (b)(1)(ii)(F). The Department intended that the ''held'' term as used in the proposal would generally have the same meaning as it has in section 103(a)(2) of ERISA. Specifically, section 103(a)(2) provides that certain entities which ''holds'' some or all of the assets of the plan must transmit and certify to the plan administrator information regarding the assets that is needed by the administrator to comply with any requirement of Title I of ERISA. Although section 103(a)(2) is limited to insurance carriers and other organizations that hold plan assets in a separate account and to banks and similar institutions that hold plan assets in a common or collective trust, a separate trust or a custodial account, the concept of what constitutes ''holding'' of a plan's assets under the proposal was intended to be the same as under section 103(a)(2).

In that regard, two commenters requested confirmation that certain arrangements involving use of ''omnibus accounts'' by banks and registered broker-dealers would satisfy the ''holding'' requirement. The commenters stated that many banks and registered broker-dealers provide various investment related services to small pension plans, often acting as custodian, recordkeeper or investment manager. The commenters indicated that the bank or broker-dealer will keep internal records tracking the specific assets that belong to each of their small pension plan customers. The plans' assets may consist of individual securities (including stocks, bonds and mutual fund shares), real estate, limited partnerships or other types of assets. In the case of securities, according to the commenters, banks and registered broker dealers often make trades for the plans in the bank's or broker-dealer's name through omnibus accounts, with most of these trades being made through depositories, such as the Depository Trust Company, or through the National Securities Clearing Corporation in the case of mutual fund shares. In all these cases, the securities are held in the name of the bank or broker-dealer on behalf of the plans and the bank or broker-dealer maintains internal records that show what assets belong to what plan. The Department agrees that such omnibus account structures would constitute the bank or registered broker-dealer ''holding'' the plan's securities for purposes of satisfying the audit waiver requirements.

Other commenters asked for clarification of whether the Department intended to exclude from the definition of ''qualifying plan assets'' certain types of traditional plan investments, for example, investments in mutual funds and insurance company general account contracts, which may not involve a regulated financial institution ''holding'' plan assets.[5] The commenters noted that it is not uncommon for small pension plans to have an individual employee of the plan sponsor serve as the trustee of the plan. In such cases, plan assets may be invested in mutual fund shares or in an insurance company general account contract with the individual trustee holding the shares or contract in his or her name as trustee of the plan. The commenter stated that the plan may be unable to meet the conditions in the proposal for two reasons: (1) Plan assets, *i.e.*, the mutual fund shares and the insurance contract, will not be ''held'' by a regulated financial institution, and (2) year-end statements regarding the assets will not be from an institution ''holding'' the plan's assets.

The Department stated in the preamble to the proposal that ''[i]n general, the Department believes that statements of plan assets prepared by certain regulated financial institutions (such as banks, insurance companies, mutual funds, and securities broker-dealers), if made available to participants and beneficiaries, provide a means by which participants and beneficiaries can independently confirm that the assets reported by the plan to be available to pay benefits as of the end of the plan year were, in fact, available according to the books and records of the institution holding the assets.'' The Department agrees with the commenters that plan investments in mutual fund shares for which the registered investment company maintains records of shareholder accounts and prepares and mails shareholder account statements provides a commensurate level of security and accountability to that which would exist if the plan's assets were held by and disclosure statements were produced by a bank, insurance company, or registered broker-dealer.[6] The Department believes that the same is true for general account contracts of an insurance company qualified to do business under the laws of a state where the insurance company prepares and mails statements to the plan regarding the value of the contract as of the end of the year and transaction activity related to the contract during the plan year. Accordingly, the final rule includes a change to the definition of qualifying plan assets that is intended to include such mutual fund shares and insurance company general account contracts as ''qualifying plan assets.'' See § 2520.104–46(b)(1)(ii)(D) & (E). The final rule also includes corresponding changes to the Summary Annual Report (SAR) and related disclosure provisions to reflect the inclusion of mutual fund shares issued by a registered investment company and general account investment contracts issued by

[5] See the Department's regulation at 29 CFR 2550.401c–1 regarding the definition of plan assets as it relates to insurance company general accounts.

[6] According to the commenter, it is a common practice for a mutual fund to employ ''registered transfer agents'' to maintain records of shareholder accounts, calculate and disburse dividends, and prepare and mail shareholder account statements, federal income tax information and other shareholder notices. Some transfer agents prepare and mail statements confirming shareholder investment transactions and account balances and maintain customer service departments to respond to shareholder inquiries. Transfer agents are regulated by and subject to periodic examination by the Securities and Exchange Commission (SEC) under the Securities Exchange Act of 1934. Among other requirements, transfer agents must register with the SEC using a Form TA–1 and must file annually with the SEC a report prepared by an independent accountant concerning the transfer agent's system of accounting controls and related procedures for the transfer of record ownership and the safeguarding of related securities and funds. For purposes of the audit waiver, the Department would consider statements from a registered transfer agent employed by the mutual fund to be statements from the mutual fund.

insurance companies in the definition of ''qualifying plan assets.'' See § 2520.104–46(b)(1)(i).

Another commenter suggested that assets of individual account plans that are invested at the direction of participants or beneficiaries should be included in the definition of ''qualifying plan assets.'' The Department did not include such a provision in the proposal because information available to the Department regarding those assets indicated that they generally would meet the conditions in the proposal. The commenters stated, however, that the SAR disclosures and the requirement to make financial institution statements available to participants and beneficiaries in individual account plans, like 401(k) plans, could involve an extensive list of financial institutions in cases where the plan provides a broad range of investment options. Also, the commenters noted that especially in such individual account plans that cover a very small number of employees, the proposed SAR disclosures could give all the plan's participants and beneficiaries access to confidential financial information regarding the type and performance of individual account investments made by other participants. The commenters indicated that this result would particularly impact small business owners who often have the largest accounts in the plan, and, accordingly, could create a tension in the small business market that would be inconsistent with the Department's goal of encouraging pension plan establishment and maintenance. The commenters suggested that the Department address this concern by including such participant-directed assets in the definition of qualifying plan assets subject to the condition that participants and beneficiaries are furnished statements regarding the assets allocated to their individual accounts at least annually directly from a qualified independent financial institution, such as a bank, insurance company, registered broker-dealer, or mutual fund.

The Department believes that, in the case of an individual account plan, the security and accountability objectives of the proposal can be met for assets allocated to individual accounts if the participant or beneficiary has the opportunity to exercise control with respect to those assets and the participant or beneficiary is provided, at least annually, a statement from a regulated financial institution describing the assets held (or issued) by such institution and the value of such assets. In such a case, each participant can effectively monitor the assets in their individual accounts, and the regulated financial institution statements provide a reliable assurance that the assets reported to be in the individual account are in fact there. Accordingly, the definition of ''qualifying plan assets'' has been modified in the final rule so that plan administrators of individual account plans can rely on this alternative approach in determining whether participant directed assets allocated to individual accounts can be treated as ''qualifying plan assets'' for purposes of applying the 95% test.

Another commenter suggested that the Department exclude qualifying employer securities from those assets considered to be qualifying plan assets. The commenter stated that qualifying employer securities should not be treated as qualifying plan assets because they are ''frequently mis-valued'' and are subject to special rules. It was the intention of the Department in proposing these amendments to improve the security of plan assets against losses due to fraud or dishonesty by providing a means under which the existence and amount of the plan's investments could be independently verified by participants and beneficiaries. The comment regarding valuation practices raise issues that are beyond the scope of the proposal, and, accordingly, the Department did not make any changes to the proposal in response to this comment.

One commenter asked the Department to clarify in two respects the definition of qualifying plan assets as applied to participant loans. The commenter asked whether a loan that is treated as a distribution under section 72(p) of the Internal Revenue Code because it exceeds the maximum dollar limit set forth in Code 72(p)(2)(A)(1) will fail to be a qualifying plan asset. Under the proposal, qualifying plan assets included ''any loan meeting the requirements of section 408(b)(1) of the Act and the regulations issued thereunder.'' Neither section 408(b)(1) of ERISA nor the Department's regulations at § 2550.408b–1 expressly place a specific dollar limit on participant loans; however, § 2550.408b–1(a)(1)(iii) requires that loans must be made in accordance with specific provisions regarding such loans set forth in the plan. Accordingly, to the extent that the plan terms regarding participant loans include limits intended to ensure that the plan's loan program complies with requirements under Code 72(p)(2), those plan terms would have to be complied with for the loan to meet the requirements of section 408(b)(1) of ERISA.

The commenter also asked whether a loan would be seen as continuing to satisfy the requirements of section 408(b)(1) of ERISA, and therefore continue to constitute a qualifying plan asset, even after a participant was in default under terms of the loan agreement. The Department included participant loans within the term ''qualifying plan assets'' because of the belief that such loans are assets that present little risk of loss to participants and beneficiaries as a result of acts of fraud or dishonesty. Even where a participant defaults on a loan, that fact generally should not put the plan at greater risk of loss due to fraud or dishonesty. Accordingly, the Department does not believe that the characterization of a participant loan as ''in default'' should disqualify the loan from continuing to be treated as a ''qualifying plan asset.''

One commenter suggested that the audit waiver be conditioned on all the assets of the plan being held by qualifying financial institutions that file Form 5500 annual reports with the Department regarding the assets they hold. Several other commenters stated that the 95% test was reasonable, provided adequate flexibility, and was consistent with the investment practices of most small pension plans. It was not, and continues not to be, the intent of the Department to directly or indirectly influence the type of investments held by small pension plans through application of the audit requirements. Rather, the Department continues to believe that all plan assets do not need to be held by a regulated financial institution to achieve the improved level of security and accountability that is the objective of this rulemaking. Rather, the definition of ''qualifying plan assets,'' the disclosure requirements, and the bonding components of the rule provide plans with flexibility in structuring their investment portfolios while also ensuring an adequate level of security and accountability. Accordingly, the Department did not adopt this suggestion.

2. Fidelity Bonding Requirements

A number of commenters requested clarification of what constitutes ''handling'' for purposes of the requirement that persons who handle non-qualifying plan assets must be covered by a fidelity bond in an amount equal to the value of the assets they handle. The term ''handling'' is defined in 29 CFR 2580.412–6 for purposes of the general fidelity bonding requirement

under section 412 of ERISA. The proposal expressly required that persons handling non-qualifying plan assets would have to be bonded ''in accordance with the requirements of section 412 of the Act and the regulations issued thereunder, except that the amount of the bond shall not be less than the value of such assets.'' See Proposed § 2520.104–46(b)(1)(i)(A)(2). No change is being made in the final rule to this aspect of the proposal. Accordingly, the definition of handling in § 2580.412–6 would apply for purposes of meeting the fidelity bonding conditions in § 2520.104–46 as amended by the final rule.

The Department received several comments that focused on the amount of bonding coverage required under the proposal. One commenter was critical of the fidelity bonding provisions in the proposal because such bonds do not protect against losses resulting from imprudent investments and because the commenter believed that ''no amount of increased reporting or bonding will prevent a crook from being a crook.'' On the other hand, a comment submitted from the surety industry suggested as an alternative to the conditions in the proposal that the Department require 100% of the assets of a small pension plan be covered by a fidelity bond as the most effective way to increase the protection of plans from losses due to fraud or dishonesty. Another commenter observed that under the proposal some plans would be able to use their general fidelity bond under section 412 of ERISA to satisfy the fidelity bonding requirement in the proposal, and suggested that the amount of the fidelity bonding coverage be increased to condition the audit waiver on the plan having a bond in an amount equal to 10% of all plan assets plus 100% of all non-qualifying plan assets.

Although it may not be feasible to develop a regulation that would make it impossible for any plan to suffer any losses due to fraud or dishonesty, the Department does not consider that circumstance to be a valid reason for not adopting this regulation which will provide meaningful enhancements in security and accountability for participants and beneficiaries in small pension plans. The Department also is not prepared to adopt the suggestion that 100% of all small pension plans' assets be required to be covered by a fidelity bond because such a requirement would, in the Department's view, impose more costs on plans and plan sponsors without providing substantially more security for qualifying plan assets. The 100% bonding approach suggested by the commenter also would not provide participants and beneficiaries the improved disclosures set forth in the proposal. Lastly, the Department recognized in the proposal that inasmuch as compliance with section 412 generally requires a bond in an amount not less than 10% of all the plan's funds or other property handled, the bond acquired for section 412 purposes may in some cases be adequate to cover any non-qualifying assets under the proposal. Even in those cases, however, the bond would still equal 100% of the value of the non-qualifying plan assets. Accordingly, the Department did not adopt any of the suggested changes regarding the amount of fidelity bond coverage required to be eligible for the audit waiver.

The Department included fidelity bonding examples in the preamble to the proposal in an effort to explain the fidelity bonding requirements in the proposal and the interaction between those requirements and the general fidelity bonding requirements under section 412 of ERISA. To make those examples easily accessible, the Department inserted the examples in the final rule as a new § 2520.104–46(b)(1)(iii)(B).

3. Disclosure

As noted above, under the proposal, the waiver of the requirement to engage an accountant is further conditioned on the disclosure of certain information to participants and beneficiaries. Specifically, § 2520.104–46(b)(1)(i)(B) required that the SAR of a plan electing the waiver include, in addition to the other information required by § 2520.104b–10: (1) The name of the institution holding ''qualifying plan assets'' and the amount of such assets held by each institution as of the end of the plan year; (2) the name of the surety company issuing the bond, if the plan has more than 5% of its assets in non-qualifying plan assets; (3) a notice indicating that participants and beneficiaries may, upon request and without charge, examine, or receive copies of, evidence of the required bond and statements received from each institution holding qualifying assets which describe the assets held by the institution as of the end of the plan year; and (4) a notice stating that participants and beneficiaries should contact the Regional Office of the U.S. Department of Labor's Pension and Welfare Benefits Administration if they are unable to examine or obtain copies of statements received from each institution holding qualifying assets or evidence of the required bond, if applicable.

One commenter noted that in many cases more than one regulated financial institution may hold plan assets and asked the Department to confirm that multiple statements from separate institutions could be used to satisfy the conditions in the proposal. As the Department explained when it published the proposal, the rule does not require the year-end statements to be in any particular form, but the statements, at a minimum, must identify the institution holding the assets and the amount of assets held as of the end of the year. The Department did not intend, and the language of the proposal does not require, that the plan receive a single statement from one financial institution.

Another commenter suggested that the SAR and other disclosure requirements in the proposal should be applied to all large plans required to furnish SARs to participants, not just small pension plans. The commenter's suggestion called for regulatory changes that would be beyond the scope of this rulemaking which did not include any changes in the information disclosure or audit requirements applicable to large pension and welfare plans. Moreover, the annual reporting and audit requirements applicable to large plans generally result in the availability of more comprehensive and detailed information about the plan's investments than the disclosure requirements in the proposal. For example, large plans with investment portfolios are generally required to include various financial schedules in their annual report, including a detailed listing of the assets of the plan, and, pursuant to section 103(a)(3)(A) of ERISA, the IQPA report attached to the Form 5500 must include the accountant's opinion on whether those schedules ''present fairly, and in all material respects the information contained therein when considered in conjunction with the financial statements taken as a whole.'' Participants and beneficiaries in such large plans have a right, upon request, to examine and obtain copies of the Form 5500 and the IQPA report, and the SAR required to be furnished to participants must include a notification of that right.

Several commenters indicated that the disclosure requirements set forth in the proposal would require adjustments to the way SARs are currently prepared and asked the Department to adopt less detailed SAR disclosures. For example, one commenter suggested that the SAR be required to state only the percentage of assets held by regulated institutions and the amount of any fidelity bonds if

plan does not meet the 95% test, along with a statement that participants and beneficiaries have a right to examine and get copies, on request, of statements from the institutions and evidence of any required fidelity bond. Another commenter stated that adding more information to that already required to be given in the SAR may be confusing to many participants. The commenter suggested that including a ''boilerplate'' notice in the SAR regarding the financial institution statements and fidelity bond would give participants and beneficiaries interested in reviewing the materials knowledge of their availability at no cost. As noted above, the Department believes that furnishing statements from certain regulated financial institutions regarding the plan's assets provides a means by which participants and beneficiaries can independently confirm that the assets reported by the plan to be available to pay benefits as of the end of the plan year were, in fact, available. Such disclosure, in the Department's view, reduces the likelihood of losses over long periods due to acts of fraud or dishonesty. The Department believes that the security and accountability objectives of the proposal are enhanced by the disclosure of the names of institutions holding (or issuing in the case of mutual fund shares and general account investment contracts with insurance companies) qualifying plan assets and the amount of such assets. A general disclosure that information is available upon request would not, in the view of the Department, provide participants with sufficient information to make an informed decision on whether to request the underlying financial institution statements or evidence of bonds.[7]

The Department is making one change in the SAR disclosure requirements to address the inclusion, discussed above, of participant directed assets in the definition of qualifying plan assets. As noted above, the final rule provides in § 2520.104–46(b)(1)(ii)(F) that, in the case of an individual account plan the definition of ''qualifying plan assets'' would include any assets in the individual account of a participant or beneficiary over which the participant or beneficiary has the opportunity to exercise control and with respect to which the participant or beneficiary is furnished, at least annually, a statement from one of the regulated financial institutions referred to in § 2520.104–46(b)(1)(ii)(C), (D) or (E) describing the assets held (or issued) by the institution and the amount of such assets. A new provision was added to the final rule to make it clear that the SAR disclosure requirements would not apply to individual account assets that meet the definition of qualifying plan assets pursuant to the alternative described in paragraph (b)(1)(ii)(F). See § 2520.104–46(b)(1)(i)(B)(*1*).[8]

A commenter suggested that the final regulation state that the requirement to provide these individual account statements could be satisfied by giving participants and beneficiaries access to individual account information via ''800'' numbers, automated voice response systems, website access, and other similar technologies. The Department does not believe that access to information is comparable to affirmatively providing participants and beneficiaries with information about their accounts. Accordingly, the final rule requires that, as with SARs, the individual account statements must be ''furnished'' to participants. See § 2520.10 4–46(b)(1)(ii)(F). In that regard, the Department notes that it has a separate regulation project pending under § 2520.104b-1 that is focused on the use of electronic communication technologies by ERISA covered plans to satisfy certain disclosure obligations under Part 1 of Title I, including the obligation to furnish SARs to participants. In the Department's view, measures and methods acceptable for furnishing SARs under the Department's regulation at § 2520.104b-1 would also be acceptable for regulated financial institutions to use in furnishing individual account statements under this final regulation.

4. Miscellaneous Issues

One commenter asked the Department to exclude from the audit waiver requirements plan assets in individual account plans belonging to owner-employees. The commenter posited that owner-employees generally would not need the additional disclosures set forth in the proposal. Another commenter in a similar vein argued that ''top heavy'' plans should be exempt from the audit requirement because ''[b]y definition, 60% or more of the accrued benefits of a top-heavy plan are those of ''key employees'' as defined by IRC § 416(i) * * * [and] these are the type of participants who are most likely to be able to police or monitor the performance of their accrued benefits.'' The Department does not believe that such carve outs for owner-employee assets or top heavy plans would be appropriate. First, the Department believes that inclusion of participant directed assets in individual account plans and the related adjustments to the disclosure provisions in the proposal adequately address the commenter's concerns regarding owner-employees. Second, ''top heavy'' status may vary from year to year which may result in intermittent and potentially confusing disclosures to plan participants. Moreover, the rationale presented by the commenter ignores the non-key employee participants in the plan. The Department, accordingly, did not adopt the carve-outs suggested by these commenters.

A commenter urged the Department to improve the remedies available for aggrieved participants in cases where there have been losses due to fraud or dishonesty. The commenter observed that participants often do not have the financial resources to retain experienced ERISA counsel even in cases of clear fiduciary violations, that fiduciaries in cases involving interpretation of plan documents may benefit from courts' reviewing their interpretations under a deferential ''arbitrary and capricious'' standard, that statutory remedies are limited in fiduciary cases and do not include compensatory and punitive damages, and that courts may not award full attorney's fee awards even in cases where the participant prevails. The commenter concluded that enhancing retirement security would be better accomplished by improving the remedies available to aggrieved plan participants. Expanding the ERISA remedies available to participants and beneficiaries in cases involving plan losses due to fraud or dishonesty would, in the Department's view, generally require legislation and, accordingly, is beyond the scope of this administrative rulemaking.

5. Request for Public Comments on Alternatives

To aid in its effort to develop a cost-effective final regulation, the Department solicited views and comments from the benefit plan community on whether there are alternative approaches that would provide significant enhancements in the security of small pension plan assets and the accountability of persons

[7] Several commenters asked questions about and/or suggested modifications of certain conclusions regarding estimated costs and burdens associated with complying with the SAR and related disclosure requirements that were contained in the Department's regulatory impact analysis published in the **Federal Register** along with the proposal. Those comments are addressed in the regulatory impact analysis section of this notice.

[8] The final rule also includes qualifying employer securities and participant loans in this new provision in paragraph (b)(1)(i)(B)(1) to make it clear that the there are no special SAR disclosures associated with the treatment of such assets as qualifying plan assets.

handling those assets and that would be more effective or involve less cost and burden than this proposal. In that regard, the Department specifically invited comments on requiring, as conditions of being eligible for the audit waiver, that small pension plans (1) obtain a fidelity bond covering persons who handle plan funds in an amount equal to at least 80% of the value of the plan's assets and (2) make available to participants and beneficiaries a schedule of the plan's assets held for investment purposes as of the end of the plan year similar to the schedule currently required as part of the Form 5500 annual report filed by pension plans with 100 or more participants. No commenter supported this alternative approach. The two commenters that specifically addressed this alternative concluded that it would be more disruptive and more costly for most employers and would be unlikely to provide sufficient additional benefits to plan participants and beneficiaries to justify the extra administrative costs and burden to small plan sponsors.

6. Effective Date

Finally, several commenters requested a delayed effective date to give small pension plans sufficient time to comply with the new summary annual report and bonding requirements provided for in this rule. The proposal envisioned that the final regulation would be effective 60 days after publication in the **Federal Register**. One commenter suggested that the new requirements should not be applicable until the later of: (1) the first plan year beginning after 180 days after the final regulation is published in the **Federal Register**, or (2) the first plan year beginning after the first surety bond policy expiration date that is at least 60 days after the regulation is finalized. Another commenter asked that the effective date be delayed for all plans until the first plan year beginning on or after January 1, 2002.

The Department believes that it is important to make this final rule effective in a timely fashion so that participants and beneficiaries get the enhanced security and accountability protections of the new audit waiver conditions. The Department is also sensitive to the need for plans and plan sponsors to have sufficient time to make adjustments to comply with the disclosure and bonding provisions in the regulation. In light of the fact that fidelity bonds may be issued for multi-year periods, although the amount of the coverage is required to be set annually, an effective date based on the surety bond policy expiration date could provide for a overly long period before some plans would be required to comply with the new audit waiver conditions. Similarly, making the amendments effective for the first plan year beginning on or after January 1, 2002, could provide a prolonged period following publication of the final rule for plans with non-calendar fiscal years before they would have to comply with the new SAR disclosure requirements (as long as four years for some plans with non-calendar fiscal years). The Department believes that making the amendments applicable as of the first plan year beginning after 180 days after the final regulation is published in the **Federal Register** provides an adequate period of time for plans and plan sponsors to make any necessary adjustments while not unduly delaying the implementation of the new audit waiver conditions. Accordingly, the final rule will be effective 60 days after publication in the **Federal Register** but the amendments to the audit waiver conditions will be applicable as of the first plan year beginning after 180 days after the final regulation is published in the **Federal Register**.

Executive Order 12866 Statement

Under Executive Order 12866, the Department must determine whether a regulatory action is ''significant'' and therefore subject to the requirements of the Executive Order and subject to review by the Office of Management and Budget (OMB). Under section 3(f), the order defines a ''significant regulatory action'' as an action that is likely to result in a rule: (1) having an annual effect on the economy of $100 million or more, or adversely and materially affecting a sector of the economy, productivity, competition, jobs, the environment, public health or safety, or State, local or tribal governments or communities (also referred to as ''economically significant''); (2) creating serious inconsistency or otherwise interfering with an action taken or planned by another agency; (3) materially altering the budgetary impacts of entitlement grants, user fees, or loan programs or the rights and obligations of recipients thereof; or (4) raising novel legal or policy issues arising out of legal mandates, the President's priorities, or the principles set forth in the Executive Order.

Pursuant to the terms of the Executive Order, it has been determined that this action is ''significant'' and subject to OMB review under Section 3(f)(4) of the Executive Order. Consistent with the Executive Order, the Department has undertaken to assess the costs and benefits of this regulatory action. The Department's assessment, and the analysis underlying that assessment, is detailed below.

Overview

This regulation is intended to accomplish two purposes: to limit pension plan fraud and to provide participants and beneficiaries of small pension plans with the information they need to monitor their plan assets and to hold plan fiduciaries accountable. Recent cases involving embezzlement or other misappropriations of pension assets have focused national attention on the potential vulnerability of small pension plans to fraud and abuse. As a result, the Department has determined that modifications to the small plan audit waiver (§ 2520.104–46) will enhance pension plan security. Imposing the additional conditions on the audit waiver will help to reduce the risk of loss due to acts of fraud or dishonesty with small plan assets. It will also provide participants with more information about their pension plans, thus better enabling them to help provide the checks and balances needed to ensure the integrity of the pension plan.

The cost to small pension plans of the provisions of this final rule will not be large—it is estimated to be less than 1% of total annual administrative costs for all small pension plans. Estimates from Form 5500 data indicate that most small pension plans meet the requirement to obtain a waiver that at least 95% of the plan assets must be ''qualifying plan assets.'' For the few plans not meeting this requirement, the cost of obtaining a fidelity bond to enable them to meet the conditions for a waiver is low relative to the increased security provided to participants and beneficiaries. Likewise, the cost of meeting disclosure requirements is small because, after an initial start up cost to include new language in the SAR and allow for the inclusion of additional detail concerning qualifying plan assets, the subsequent annual cost consists only of updating the SAR with data already provided at least annually by the financial institutions in the normal course of business. Other costs include a small cost for the preparation and distribution of documents to participants and beneficiaries who request copies of statements from financial institutions and evidence of fidelity bonding.

The costs imposed by the additional conditions this regulation places on the existing small plan audit waiver are expected to total $24.1 million

annually.[9] This total includes $714,000 for all 605,115 small pension plans to determine whether they satisfy the conditions for the audit waiver with respect to the percentage of plan assets held by regulated financial institutions, $6.5 million to obtain additional fidelity bonding coverage for the 29,414 plans not expected to meet the condition that at least 95% of the plan's assets are held by a regulated financial institution, $16.3 million to satisfy additional disclosure conditions of the audit waiver, and $628,000 to respond to requests by participants and beneficiaries for copies of the statements of financial institutions and evidence of fidelity bonding. As explained further below, the cost estimates of the final rule are greater than the $15.6 million estimate presented in the proposal, due primarily to the adjustment of certain assumptions used in estimating the rule's impact. The revised estimates also take into account the substantive modifications made to the proposal in the development of the final rule.

In the Department's view, the benefits (although not quantified) of the final rule's requirements for the IQPA waiver outweigh the costs. The enhanced accountability and security of small pension plans resulting from the additional IQPA waiver conditions will benefit plan participants who are counting on these pensions for retirement security. With minimum government intervention, participants and other parties to the plan will have an improved ability to verify and monitor plan assets. Given the more than $300 billion in small pension plan assets, any increase in security and accountability is valuable. The additional conditions will also strengthen confidence in the pension system as a whole. The following items highlight other potential benefits of the regulation in a qualitative, and when possible, quantitative, way:

- Confidence in the private pension system may be strengthened and may result in increased participation among the nearly 600,000 private wage and salary workers who currently elect not to participate in a small plan that is offered;
- In 1998, more than $6 million in pension plan assets were recovered as a result of criminal investigations. If new conditions are imposed on the small plan audit exemption, fewer assets may be missing from plans in the future because of the checks and balances put in place by improved information disclosure;
- The investigations and litigation associated with recovering assets of small pension plans can be very costly to private parties and to the Government. In 1998, nearly 6,000 civil investigations were initiated by the Department. If new conditions are imposed on the small plan audit exemption, losses will likely decline and fewer investigations of small pension plans may be needed. This will have the dual effect of lowering investigation-related costs for small plans and permitting Federal authorities to enhance the security of other participants by directing their efforts elsewhere; and
- When workers discover that their pension plan assets are missing or are jeopardized, worker productivity declines. Time at work may be spent investigating what happened to plan assets, whether they will be restored, and whether retirement will be possible without these pension assets. A more secure system for monitoring pension plan assets will reduce productivity loss to employers.

Comments on Estimated Economic Impact

The Department received 19 written comments regarding the proposed regulation. Of these, the majority commended the Department for its efforts to strike a reasonable balance between improving the security of small pension plan assets and allowing small plans and small plan sponsors to function efficiently without the imposition of undue administrative burdens and costs. The principal concerns of those commenters who focused on the economic impact of the proposal related to the Department's estimates of the costs to comply with the bonding and disclosure provisions, as well as to the Department's methodology for estimating the number of plans potentially impacted by the proposed amendments to the waiver of the requirement to engage an independent qualified public accountant. Specifically, commenters questioned whether the cost burden for the bond would be ''nominal'' as the Department suggested in the proposal, and whether the cost burden for developing and modifying the SAR was greater than the Department had estimated. These issues are addressed in more detail below.

Four commenters addressed the cost of the surety bond. The proposed regulation provided that, for each plan year for which the waiver is claimed, if at least 95% of the assets of the plan do not constitute ''qualifying plan assets'' any person who handles assets that do not constitute qualifying plan assets must be covered by a bond meeting the requirements of section 412 of ERISA, except that the amount of the bond must be not less than the amount of such assets. Based on Department data and consultation with industry representatives, the original estimate for the average additional premium cost of an enhanced surety bond was $200 per plan. One commenter questioned the Department's conclusion that the cost of additional fidelity coverage would be ''nominal,'' and whether, in fact, bonding under this regulation would be as broadly available to plans as under section 412. The comment was based on the fact that the enhanced bond requirement applies to only a small portion of the pension plan population—specifically, a population which is not audited and which maintains less than 95% of its assets in a qualified financial institution. The commenter further questioned whether, even if a plan were able to obtain a bond, it might be at a higher cost than that estimated by the Department because the requirement represented adverse selection against the surety. In any case, the eventual premium cost and impact on the availability of surety bonds under the proposal was viewed by the commenter as having a potentially high level of unpredictability because surety bonds meeting these requirements are not currently offered. Finally, the commenter proposed that a surety might request an audit by an independent accountant, or subject the plan to other more stringent underwriting requirements, in order to issue a bond for unqualified plan assets, resulting in additional attendant costs to the plan or plan sponsor.

Before concluding that enhanced bonding offered a cost effective way of protecting small plan assets, the Department had originally considered eliminating the waiver of the audit requirement for all small plans that did not meet the 95% requirement (approximately 37,000 plans). In examining the cost, however, the Department concluded that the audit cost, $230 million dollars for the 5% of plans not meeting the 95% requirement, was too great in relation to other alternatives. The Department therefore explored alternatives available to enhance pension plan security and the burdens imposed by these various alternatives. The regulation was crafted by assessing the net benefits of these alternatives and is intended to

[9] The cost estimates are derived from 1995 data on pension plans and 1998 BLS data on occupational wages as adjusted for non-wage compensation and overhead.

accomplish the goal of increased security without imposing significant costs on pension plans. Alternatives considered included on-site inspection, periodic reporting, additional compliance penalties, and additional bonding as a stand-alone requirement. However, all of these options were either (1) extremely expensive (ranging in cost from $200 million to $4 billion paid by plans or plan sponsors) and thus conflicted with the Department's priority of creating a regulatory environment that encourages pension plan formation, (2) not feasible to implement, or (3) would not have sufficiently enhanced small pension plan security.

Both before and after the comment period, the Department consulted with industry representatives about the premium cost for a bond, including the details of their formal comment, and the potential risk to the surety associated with accomplishing enhanced security through bonding of non-qualified assets. Representatives emphasized that the cost for a bond covering plan assets not held or issued by regulated financial institutions can only be assessed after some period of time in which loss experience can accumulate and the industry is able to evaluate the risk and respond through pricing. It was considered possible that, initially, due to lack of actual experience, industry costs would remain stable but would require an upward or downward adjustment at a future date. It is also possible that sureties might respond to a perceived additional exposure associated with segmenting the risk of assets that inherently represent a greater risk of loss (*i.e.,* the assets not held by financial institutions) by applying more stringent underwriting and rating this risk accordingly. The Department will monitor this situation in the future and, if in the Department's view serious problems arise, would consider amending this regulation. The Department would welcome concerned parties notifying it of any problems they encounter.

The Department agrees that the estimate of additional premium costs and other impacts on the market for fidelity bonds in near term and over time bears a degree of uncertainty. However, as discussed with industry representatives, the Department does not believe that non-qualifying assets necessarily represent an inherently greater risk of loss. Rather, the manner in which they are held simply does not afford a mechanism for an independent confirmation of the existence of the asset that is comparable to the confirmation associated with statements from regulated financial institutions, or with an examination conducted by an IQPA. Industry representatives also agreed that the surety market as a whole is very large, and that pricing is generally very affordable. It is also worth noting that, for some plans, compliance with the bonding requirements under section 412 of ERISA will also cover the bonding requirement under this regulation. Section 412 generally requires any person who handles plan funds or other property to be bonded in an amount not less than 10 percent of the amount of funds handled. Unless the value of a small plan's non-qualifying plan assets exceeds the value of 10 percent of total plan funds or other property, there is likely to be no additional risk to the surety or increase in bonding cost to plans because of this regulation.

Commenters and industry representatives called attention to potential uncertainty in future costs, but did not suggest that the estimate of an average of $200 in additional premium would result in an unreasonable cost estimate. Accordingly, the Department has not changed its earlier estimate of $200 as an average cost increase per affected plan for an enhanced fidelity bond. Our analysis shows, therefore, that bonding continues to be the least costly alternative for increasing the security of small plan assets, lowering aggregate costs by a factor of more than 20 compared to other alternatives while still accomplishing the goal of enhancing small pension plan security.

Four commenters suggested that the Department's cost estimate for the SAR disclosure underestimated the costs that would be imposed on plans. The regulation requires that, for a plan to be able to take advantage of the waiver of an audit by an IQPA, a plan's SAR must include certain specific information relating to: the financial institutions which hold or issue plan assets; bonding; the right of participants and beneficiaries to year-end statements of the financial institutions and bonding information; and a notice that participants and beneficiaries may contact the Regional Office of the Pension and Welfare Benefits Administration, U.S. Department of Labor, if they are unable to examine or obtain copies of the statements received by the plan from each institution holding or issuing qualifying plan assets, or evidence of the bond, if applicable. Two commenters suggested that most SARs are generated directly by software packages that produce the Form 5500 annual report; therefore, they thought that inserting new language might require a programming change and a greater start up expense to the plan than computed in the proposal. In addition to the initial changes, plans are also required to make annual modifications to the SAR which will reflect the current assets of the plan, the amount of the assets held or issued, and the bonding at the end of the plan year. In its economic analysis of the proposed regulation, the Department did not include the cost of annual modification of the SAR, because it was believed to be nominal. Commenters questioned this assumption as to the time it would take to update the SAR, on an annual basis, with the names of each regulated financial institution holding or issuing plan assets and the year end amount of those assets. The commenters added that preparing an annual disclosure document, with multiple custodians, would take more time than that attributed to the usual preparation of an SAR and, with the additional reporting of specific account totals, the Department should include a cost factor in the economic analysis for this obligation. The Department has responded to these comments in three ways.

First, we have increased the cost estimates for the start up changes to the SAR. Using the same basis used for burden estimates of the Form 5500 annual report, the Department assumes that 90% of SARs and 90% of the changes required by the final rule will be accomplished by service providers. Because the information required to be added to the SAR by this regulation is not currently separately reported by small pension plans as part of their Form 5500 annual filing or currently used by Form 5500 software packages, it is likely, as commenters observed, that system modifications will be required. Accordingly, the Department assumes that a systems analyst or financial manager will complete the work and has increased the hourly rate of the professional performing this activity from $39 to $57 per hour. In response to comments indicating that revising an SAR will take more time than previously anticipated, the Department has also increased its assumption for the time required to modify software and procedures to produce an amended SAR disclosure from 15 minutes to 30 minutes. However, the Department believes the time required to make these changes is moderated by the economies of scale resulting from those service providers who have multiple client plans, and whose efforts will result in a systematic SAR modification for multiple plans, usually as a part of a software package

integrated with Form 5500 preparation software. Based on changes to cost estimates for wage rates and time requirements, the resulting cost estimate for this SAR start up modification is $12.1 million, compared with the $5.9 million originally estimated. Lastly, individual account plans are not included in this cost burden because an alternative SAR disclosure for these plans is now described in the final regulation. This has the result of lowering the original cost estimate for small plans, although the net effect is the $6.2 million increase.

Second, in response to comments, the Department added new paragraph (b)(1)(ii)(F) to § 2520.104.46 which modifies the SAR reporting requirements under paragraphs (b)(1)(i)(B) in the case of individual account plans holding qualified plan assets. This new paragraph provides that, in the case of an individual account plan, the SAR disclosure requirement may be satisfied as to any assets in the individual account of a participant or beneficiary over which the participant or beneficiary has the opportunity to exercise control by having a regulated financial institution referred to in paragraphs (b)(1)(ii)(C), (D) or (E) of section 2520.104–46 furnish a statement, at least annually, to participants or beneficiaries describing the assets held (or issued) by such institution and the amount of such assets. As described above, the change to the regulation is warranted because of the existing protective features of the at least annual reporting procedures for individually directed individual accounts. The change in the regulation will eliminate the need for annual modification of SARs for many individual account plans.

Third, the Department has included in the final cost $4.2 million for annual modification of the SAR to reflect changes in the financial institutions holding or issuing qualifying plan assets, the amounts of assets, and/or fidelity bonding information. Because the information used to modify the SAR is provided by the financial institutions in the regular course of business and the time needed to transfer the information to the SAR was assumed to be minimal, the Department did not originally propose a cost for such annual modification of the SAR. However, the Department recognized that most SARs are completed by service providers in a systematic fashion, either through the use of software packages interrelated with the preparation of the Form 5500 or by means of extracting figures from financial statements. The Department recognizes that some plans may require time to modify the SAR each year, but the Department believes that this time will be reduced to the extent that SAR preparation software and processes are modified to accept new information over time. The Department also believes that some of the concerns of the commenters with respect to annual modification costs have been addressed through the alternative method to SAR disclosure for individually directed account plans.

Finally, the regulation requires that plans furnish copies of year end statements from financial institutions and bonding information to those participants and beneficiaries who request them. For purposes of its cost estimates, the Department assumes that 5% of participants and beneficiaries who are not in individually directed account plans will request this information. The Department further assumes that participants and beneficiaries with individual account plans taking advantage of the alternative disclosure approach under the regulation, *i.e.,* those who receive annual statements from a regulated financial institution reporting on the value of their assets, will not request this general plan level information. Because the documents required to be disclosed by the plan have already been provided by bonding companies and financial institutions, the aggregate cost for plans to produce the copies of statements and bonding information is estimated at $627,700, reflecting labor costs of $15 per hour for assembling and photocopying and distribution costs of $.37 per request. The aggregate cost represents a reduction from the $995,000 estimated in the proposed regulation. The cost savings is a result of excluding individual account plans eligible to take advantage of the alternative disclosure approach under the regulation.

Cost Analysis

The requirements contained in this final regulation were developed to best conform to the actual investment patterns of small plans, rather than to alter these patterns. To understand the investment patterns of plans and the typical percentage of plan assets that would meet the ''qualifying plan assets'' requirement, we used Form 5500 data to examine how pension plans report their allocation of assets among various investment categories. Plan asset allocation information on the Form 5500 C/R formerly filed by small plans is currently limited to very general categories. Because of this lack of detailed financial information, the Form 5500 filings of plans with more than 100 participants but less than $2 million in assets (within two standard deviations of the mean asset value of small plans) were used as a proxy. We obtained a distribution of these plans based upon the proportion of each plan's assets that are ''qualifying plan assets.'' We then applied this distribution to the actual 1995 count of small plans to approximate the current distribution of small plans based on the proportion of assets that are ''qualifying plan assets.'' Form 5500 does not categorize ''qualifying plan assets,'' nor does it identify the holder of assets. For purposes of this analysis, we have considered the nature of the asset to be an indicator of the holder of the asset. Accordingly, we assumed that assets reported as cash, CD's, U.S. Government Securities, corporate debt and equity, loans, employer securities, and the value of interests in direct filing entities, registered investment companies, and insurance company general accounts are typically held or issued by regulated financial institutions, and as such constitute ''qualified plan assets.''

Based on a total of 605,000 small plans, 1995 data, and using the assumptions outlined above, we determined that the vast majority of the assets of small plans are ''qualifying plan assets.'' Specifically, for all but 5% of small pension plans, at least 95% of plan assets constitute ''qualifying plan assets.'' The plans that will not meet the 95% threshold are atypical of the industry standard and are sufficiently few in number such that additional conditions for an audit waiver to protect participants and plan assets are both warranted and cost effective.

The Department received a comment that expressed the view that the proxy group used for assessing the number of small plans that will not have 95% of assets held or issued by regulated financial institutions resulted in a significantly inaccurate estimate of the number of plans impacted, and thus the ultimate cost of the regulation. In the commenter's view, the distribution of assets in plans with more than 100 participants but less than $2 million in assets would be new plans, which would be attempting to minimize administrative costs. The commenter further suggests that the Department assumed a relationship between the holder of qualifying plan assets and the manner in which a plan is ''trusteed'' (*i.e.,* uses a corporate trustee such as a bank as opposed to an individual person such as a representative of the plan sponsor). Moreover, the commenter suggests delaying any action amending the audit waiver until an actual study of

the potentially impacted small plan universe is conducted.

The Department notes that while the statute clearly envisions the Department adopting rules intended to limit the administrative burdens imposed on small plans to comply with the annual reporting provisions in ERISA, and although the more limited reporting requirements actually in place for small plans results in the availability of more limited detail concerning the assets of small plans, the annual reports filed by small plans do provide accurate data with respect to the features of small plans, their total income, expenses, and assets, and the breakdown of those assets in broad investment categories. The Department's methodology in developing detailed estimates of small plan assets by investment type involved distributing the breakdown of assets in a slightly larger proxy group across the actual assets of the small plans potentially affected by this regulation. This larger group is still within two standard deviations of the mean asset value of the plans with fewer than 100 participants. The Department continues to believe this approach offers a reasonable basis for estimating detail needed to accurately assess economic impact, given that this level of detail is not available under existing regulatory requirements.

Furthermore, this methodology results only in an estimate of the types of assets held by small plans. The types of assets, such as mutual funds, marketable securities, or certificates of deposit, are assumed to be an indicator of who holds the assets and, thus, the extent to which they will be qualifying plan assets for purposes of this regulation. The methodology is not intended to identify the trustee of the plan, nor is it necessary to do so to assess the economic impact of the regulation. As the Department has indicated, it does not intend to alter the investment choices of small plans, or their arrangements for designating a trustee, but rather to ensure that either a mechanism is in place for regular confirmation of the existence of small plan assets by regulated financial institutions holding those assets, or that enhanced bonding is in place. The Department continues to be of the view that its approach to identifying the plans and assets potentially impacted is reasonable in light of the data available to conduct this analysis.

Finally, as noted earlier, several commenters requested clarification of the definition of ''qualifying plan assets,'' particularly with respect to assets allocated to individual account plans in which individuals direct their investments. As discussed in the Summary of Public Comments section, the Department agrees with the commenters that the security and accountability objectives of the proposal can be met, in the case of an individual account plan, for assets over which the participant or beneficiary has the opportunity to exercise control if the participant or beneficiary is furnished, at least annually, a statement from a regulated financial institution describing the assets held (or issued) by such institution and the amount of such assets. The final rule includes such assets within the definition of qualifying plan assets. This has the effect of reducing the number of plans otherwise subject to the enhanced bonding requirement from 37,000 to 29,400, and reducing the number of plans impacted by the new SAR disclosures from 605,115 to 425,709. In addition to meeting the Department's objectives with respect to small plan asset security, this modification from the proposal also limits the potential for imposition of disclosure requirements in this rule that duplicate the disclosure requirement of other regulatory provisions, such as those set forth in ERISA section 404(c) and related regulations, or disclosures made as part of normal business practice.

Regulatory Flexibility Act

The Regulatory Flexibility Act (5 U.S.C. 601 *et seq.*) (RFA) imposes certain requirements with respect to Federal rules that are subject to the notice and comment requirements of section 553(b) of the Administrative Procedure Act (5 U.S.C. 551 *et seq.*) and which are likely to have a significant economic impact on a substantial number of small entities. Unless an agency certifies that a final rule will not have a significant economic impact on a substantial number of small entities, section 603 of the RFA requires that the agency present a final regulatory flexibility analysis describing the impact of the rule on small entities at the time of publication of the notice of final rulemaking. Small entities include small businesses, organizations and governmental jurisdictions.

For purposes of analysis under the RFA, the Department continues to consider a small entity to be an employee benefit plan with fewer than 100 participants. The basis of this definition is found in section 104(a)(2) of ERISA, which permits the Secretary of Labor to prescribe simplified annual reports for pension plans which cover fewer than 100 participants. Under section 104(a)(3) of ERISA, the Secretary may also provide for exemptions or simplified annual reporting and disclosure for welfare benefit plans. Pursuant to the authority of section 104(a)(3) of ERISA, the Department has previously issued at 29 CFR 2520.104–20, 2520.104–21, 2520.104–41, 2520.104–46 and 2520.104b–10 certain simplified reporting provisions and limited exemptions from reporting and disclosure requirements for small plans, including unfunded or insured welfare plans covering fewer than 100 participants and satisfying certain other requirements.

Further, while some large employers may have small plans, in general most small plans are maintained by small employers. Thus, the Department believes that assessing the impact of this rule on small plans is an appropriate substitute for evaluating the effect on small entities. The definition of small entity considered appropriate for this purpose differs, however, from a definition of small business which is based on size standards promulgated by the Small Business Administration (SBA) (13 CFR 121.201) pursuant to the Small Business Act (15 U.S.C. 631 *et seq.*). No comments were received with respect to the standard. Therefore, a summary of the final regulatory flexibility analysis based on the 100 participant size standard is presented below.

The amount of assets in small pension plans has grown nearly tenfold since 1975, making small pension plans an increasingly important retirement savings vehicle for Americans. In light of recent cases involving embezzlement or other misappropriations of pension assets that have focused national attention on the potential vulnerability of small pension plans to fraud and abuse, this regulation has been written to enhance the security and accountability of small pension plans.

The rule amends the Department's existing waiver of examination and report of IQPA for employee benefit plans under ERISA with fewer than 100 participants. This rule impacts all classes of small pension plans subject to Title I of ERISA with fewer than 100 participants. As shown by the regulatory analysis, the regulation accomplishes the objective of enhancing pension plan security without imposing significant costs via additional reporting, recordkeeping, or other compliance requirements.

Under the regulation, for each year in which a waiver is claimed, at least 95 per cent of the assets of the plan must constitute ''qualifying plan assets'' or any person who handles assets of the plan that do not constitute qualifying plan assets must be bonded in

accordance with the requirements of section 412, except that the amount of the bond shall not be less than the amount of such assets. In 1995, there were approximately 605,000 employee pension plans with fewer than 100 participants that met the requirements for the audit waiver. The Department estimates that, under the regulation, only 29,400 small plans will not meet the 95 per cent limit for qualifying plan assets and will be required to either purchase a fidelity bond or undergo an audit. We assume that plans will choose the less costly alternative of bonding to satisfy the regulation. All 605,000 small pension plans, however, will be subject to SAR disclosure requirements, which include adding new language to the SAR, providing copies of statements from regulated financial institutions and bonding information free of charge to participants and beneficiaries who request them and, for those plans which are not individual account plans, modifying the SAR on and annual basis.

The Department received 19 comments regarding the proposal. The majority commended the Department for striking a reasonable balance between providing accountability and protection for small pension plans and minimizing administrative costs and recordkeeping. Four commenters raised the issue of bonding and its impact on small plans, specifically questioning whether the cost of the bond would be nominal as described in the proposal. Commenters expressed the view that a surety might respond to a perceived additional exposure associated with segregating a particular group of plans which have the potential of posing greater risk to the surety because of adverse selection by requesting an audit by an independent accountant or subjecting the plan to other more stringent underwriting requirements. The Department had estimated that cost of a fidelity bond to be $200 per plan.

Before determining that bonding was the best and most cost efficient way of protecting small assets, the Department considered several alternatives, including imposing an audit on all small plans that do not meet the 95% requirement, on-site inspection, periodic reporting, and eliminating the existing small plan audit waiver for examination and reporting by an IQPA. All of these options, however, were either extremely expensive (ranging in cost from $200 million to $4 billion), thereby conflicting with the Department's priority of creating a regulatory environment that encourages pension plan formation, not feasible to implement, or would not have sufficiently enhanced small pension plan security. After the comment period, the Department consulted with representatives of the surety industry to further assess the impact of bonding on small plans. Taking into consideration the information received from industry representatives as well as other comments received by the public, the Department has decided not to change its original estimate of $200 per plan for a fidelity bond.

The actual cost of a bond, according to representatives from the surety industry, will best be determined after some period of time in which the industry will be able to evaluate the risk involved. The cost of a premium may not change initially, but could be adjusted upward or downward at some future date. On the other hand, the risk for bonding small plans invested in assets which are not held or issued by regulated financial institutions will not be any greater under the regulation than it is now, and the industry risk factor for ERISA plans is low. Industry representatives did not believe that audits would be required. Because underwriting judgment is necessarily applied on a case-by-case basis, actual industry experience will be the best predictor of premium cost. Our analysis of available information shows, therefore, that bonding is the least costly alternative, lowering aggregate costs by a factor of more than 20 while similarly accomplishing the goal of enhancing small pension plan security.

It is also worth pointing out that, for some small plans, compliance with the existing bonding requirements under section 412 of ERISA will also cover the bonding requirement under this regulation. Section 412 requires that any person who handles funds or other property must be bonded in an amount not less than 10 percent of the amount of funds handled. Unless the value of a small plan's non-qualifying plan assets exceeds the value of 10 percent of total plan funds or other property handled, there is no additional cost to small plans because of this regulation.

For those plans that do not have 95% qualifying plan assets (approximately 29,414 plans), the Department estimates that the cost for obtaining a bond will be $574,000 for labor for a professional's time at $39 per hour. This represents a reduction in cost from the proposed estimate of $713,600. The Department has made this adjustment because small pension plans that are individual account plans, which are generally invested in mutual funds or insurance company investments, have been provided under the final regulation with an alternative disclosure approach that should result in a fewer number of these plans needing to purchase a bond. The cost to small plans for bond premiums is therefore lower by $1,436,000. The aggregate cost for labor and for the premiums is $6.5 million, which represents a cost savings of $1.5 million from the original proposal. The per plan cost for meeting the bonding requirement is $220.

Commenters also suggested various changes to the proposed SAR disclosure requirements. Under the regulation, the SAR must disclose to participants and beneficiaries the names of the regulated financial institutions which hold or issue qualified plan assets, the amount of those assets, the fact that the plan must furnish to participants and beneficiaries on request statements from the financial institutions and information on bonding, and, finally, that if they do not receive the statements and bonding information from the plan, they may contact the plan administrator or the Pension and Welfare Benefits Administration, U.S. Department of Labor. A number of commenters suggested that, as an alternative to listing each financial institution and the amount of assets held or issued by the institution, the SAR could include a model statement which explained that the statements were available to participants and beneficiaries on request. The Department considered changing the disclosure requirements to reflect this alternative, but determined that the protection offered by furnishing statements and bonding information about the plans assets to participants and beneficiaries was of primary consideration in guarding pension plan assets. A general disclosure about availability of information will not offer the level of plan protection from fraud and dishonesty to participants and beneficiaries that they will receive from a plan's actually furnishing to them on an annual basis statements from financial institutions and bonding information.

Certain commenters expressed the view that SAR disclosure for individual account plans should not include statements concerning the amount of assets held or issued by financial institutions. Participants and beneficiaries in these plans regularly receive statements informing them of their asset allocation and the value of the assets in their individually directed accounts. The commenters stated that furnishing statements from financial institutions which do not hold or issue their investments would not be relevant and would not offer additional protection from fraud or dishonesty. In addition, commenters were concerned about the lack of privacy for individual

participant investors if very small plans were required to furnish the names of the financial institutions and the amount of assets they held to all participants. As a result of these comments, the Department has revised the regulation for individual account plan disclosure. The Department agreed that it was unnecessary to require small plans to furnish duplicative information. This has the effect of eliminating both start up and annual modification costs for individual account plans as well as protecting individual investor privacy, without compromising SAR disclosure.

As part of the disclosure requirement under the regulation, plans must add new language to the SAR. Because service providers typically use software programs to generate SARs, commenters indicated that estimates for revising existing programs which generate SARs would cost more than the Department had estimated and would require a professional's time. The Department agreed with this assessment and increased its estimate for start up costs for the additional time needed to rewrite existing software programs. Due to the lack of data on the number of service providers and the number of plans they serve, the Department can not specifically estimate a cost for a service provider to make the required changes. The Department is aware, however, that some service providers serve very large numbers of plans and believes that some economies of scale will arise from the repetition of processes. The Department also increased labor costs for a professional to $57 per hour from $39 per hour to more accurately reflect the level of expertise required to accomplish the revision. Therefore, for the 425,709 non-individually directed small plans, the start up cost is $12.1 million, based on a professional's time at $57 per hour. This represents an increase of $6.5 million in start up costs. The start up cost per plan is $29.

Annual modification of the SAR requires updating the list of financial institutions holding qualified plan assets, including the amount of those assets as expressed in the institutions' financial statements, and bonding information. Because plan administrators should receive from qualifying financial institutions statements identifying plan assets held or issued by that institution in order to properly discharge their annual reporting and other obligations under ERISA, no cost is associated with obtaining the statements. Originally, the Department did not include an estimate for annual modification because there is no burden in obtaining the statements from the financial institutions and little time was involved in transferring the information to the SAR. However, commenters suggested that modifying the SAR to include a list of financial institutions holding or issuing qualifying plan assets and reporting the changing amount of those assets annually would require a professional's time. The Department has considered these comments and believes that the costs should include an adjustment for annual modification of the SAR. The cost to plans, which are not individual account plans, for annual modification of the SAR is $4.2 million base on a professional's time at $39 per hour. As explained above, individual account plans eligible for the alternative disclosure approach set forth in the final rule are not required to annually modify SAR information and are therefore not included in the cost estimate. For those plans meeting the 95% test, the aggregate annual disclosure cost of $4.2 million translates to $6 per plan.

Finally, plans are required to furnish participants and beneficiaries with copies of the financial institution statements and bonding information upon request. Excluding participants and beneficiaries in individual account plans, the Department assumes that 5% of all small plan participants and beneficiaries will request this information. The cost to provide the information is $.6 million, which includes assembling and photocopying by a clerical worker at $15 per hour and mailing costs of $.37 per mailing. Participants and beneficiaries of individual account plans are excluded because they are generally invested in mutual funds and receive statements, at least annually, related to their personal accounts.

When considering any regulatory action, it is important to consider the impact on businesses of various sizes. Given that well over half of all small pension plans (54%) have between 1 and 10 participants, it is important to focus on these small plans in particular.

ESTIMATES OF THE NUMBER AND PERCENTAGE OF VERY SMALL PENSION PLANS (1–9 PARTICIPANTS) NOT MEETING THE ''QUALIFYING PLAN ASSETS'' TEST AT VARIOUS THRESHOLD LEVELS

	Alternative threshold levels for qualifying plan assets						
	100%	95%	90%	85%	80%	75%	<75%
Number of plans	186,142	20,377	10,771	9,402	8,737	8,100	49
Percentage of plans	54	6	3	3	3	2	.01

As the above table shows,[10] the percent of plans with 1–9 participants that would meet the requirement that 95% of assets be ''qualifying plan assets'' is the same as that for all small plans with fewer than 100 participants as indicated below. Therefore, the 95% threshold is reasonable for all classes of plans within the category of those with fewer than 100 participants.

ESTIMATES OF THE NUMBER AND PERCENTAGE OF SMALL PENSION PLANS (1–99 PARTICIPANTS) NOT MEETING THE ''QUALIFYING PLAN ASSETS'' TEST AT VARIOUS THRESHOLD LEVELS

	Alternative threshold levels for qualifying plan assets						
	100%	95%	90%	85%	80%	75%	<75%
Number of plans	339,967	29,414	11,409	9,037	7,855	6,743	0

[10] The data in the table was estimated in the same way as that for pension plans with more than 100 participants (see Executive Order 12866 Statement).

ESTIMATES OF THE NUMBER AND PERCENTAGE OF SMALL PENSION PLANS (1–99 PARTICIPANTS) NOT MEETING THE ''QUALIFYING PLAN ASSETS'' TEST AT VARIOUS THRESHOLD LEVELS—Continued

	Alternative threshold levels for qualifying plan assets						
	100%	95%	90%	85%	80%	75%	<75%
Percentage of plans	56	4	2	2	1	1	0

Paperwork Reduction Act

In accordance with the Paperwork Reduction Act of 1995 (44 U.S.C. 3501–3520) (PRA 95), the Department submitted the information collection request (ICR) included in the proposed Small Pension Plan Security Amendments to OMB for review and clearance at the time the Notice of Proposed Rulemaking (NPRM) was published in the **Federal Register** (December 1, 1999, 64 FR 67436). OMB approved the revisions to the existing information collection, the ERISA Summary Annual Report, under control number 1210–0040 on February 2, 2000. This approval will expire on February 28, 2003. Certain additional adjustments have been made to the ICR and the estimates of burden in response to public comments. The information collection provisions of this final rule, as well as the adjustments made to the information collection provisions and the burden estimates originally incorporated in the proposal, are discussed below.

The revisions to the small plan audit waiver implemented by this final rule will increase the security and accountability of small pension plans, while minimizing the additional paperwork burden imposed on small plans. No additional paperwork burden is associated with two of the three provisions in the regulation—the requirement that 95% of plan assets be ''qualifying plan assets'' and the more protective bonding requirement for those plans not meeting the 95% test. For those plans which are not individual account plans, additional burden does arise from three other provisions: including new language in the SAR; modifying the SAR annually to identify the institutions holding or issuing qualifying plan assets and amounts of the assets reported by the institutions as of the end of the plan year, and; furnishing copies of financial institution statements and bonding information upon request.

It is assumed that adding the additional language to the SAR form will be accomplished by service providers for 90% of plans, and in-house for the remaining plans. The start up cost is estimated to be $10.9 million for the 90% of small plans using service providers for 30 minutes of a professional's time at $57 per hour. This amounts to about $3.6 million when annualized over a three-year period. The hourly burden for plans that will be required to add additional information to their SAR themselves (assumed to be 10% of small plans) is 21,286 hours, based on 30 minutes of a professional's time at $57 per hour. This estimate has been adjusted from the one outlined in the original proposal. The increase of $6.2 million is the result of an adjustment in the hourly rate for a professional from $39 per hour to $57 per hour to reflect the fact that this work may more likely be done by systems analysts and financial managers rather than the auditors and accountants previously assumed to perform the task of revising the SAR format. We have also adjusted the estimated time required to complete this work from 15 minutes per plan to 30 minutes per plan.

These adjustments are the result of comments received in response to the NPRM that indicated that both the hourly rate for a professional and the time allotted for drafting new SAR language and modifying existing software and information management procedures to produce a detailed listing of qualifying assets by financial institution at year end were too low. The revised hourly rate is derived from 1998 BLS data on occupational wages for financial managers, which is the higher of the wage rates for financial managers and systems analysts, the two professional categories assumed most likely to complete this work. The change in the hourly burden reflects a reevaluation by the Department in response to comments of the time it will take to make changes to a plan's current SAR, particularly where these changes may involve rewriting an existing software package. The Department also recognized that most SARs are completed by service providers in a systematic fashion, either through the use of existing software packages interrelated with the preparation of the Form 5500 (which the SAR summarizes), or by means of extracting figures from financial statements supporting the Form 5500. In either case, the service provider is expected to have ready access to the year end statements needed to set up an appropriate format for listing institutions and amounts, as well as modifying the institutions and amounts from year to year, because the statements must be used in the preparation of the annual report.

Commenters noted, and the Department recognizes, that revising software or procedures may in many instances require more than 30 minutes. However, the Department believes that the time required to change the SAR format and procedures used to produce the detail figures will be moderated by several factors. First, with the exception of the institutions and amounts, and the name of the surety issuing the plan's fidelity bond if the plan has more than 5% of its assets in non-qualifying assets, the Department has supplied in § 2520.104–46(b)(1)(i)(B)(*3*) and (*4*) the general format of the language to be added.

In addition, where service providers serve multiple client plans, it is assumed that they will achieve certain efficiencies in modifying systems and procedures to generate the revised SAR format, resulting in lower per plan costs. The Department can not specifically estimate this effect or develop an estimate of burden per service provider due to the lack of information, especially with respect to small plans, on the number of service providers and number of providers servicing multiple plans. However, the Department is aware that some service providers prepare annual reports and SARs for very large numbers of plans, and believes that economies of scale do arise in those situations, generally lowering estimates derived on a per plan basis.

Finally, the existing systems of service providers to small plans may more readily accommodate the required format changes to the extent that these service providers also have large plan clients. As part of their annual reporting obligations, large pension plans are currently required to submit a listing of assets held for investment that is similar in certain respects to the listing of the regulated financial institutions holding qualifying assets and the amounts held required under the final rule. Adjusting

a system already designed to produce the listing of assets held for investment may require a smaller commitment of resources to meet the SAR disclosure conditions of the final rule than revising a system that does not include this capability. For these reasons, the Department considers 30 minutes per plan to be a reasonable estimate of the average time required for modification of the SAR format.

The regulation also provides that a plan administrator must, on an annual basis, modify the SAR to include the names of regulated financial institutions holding or issuing qualifying plan assets, the amount of those assets at the end of the plan year, and certain bonding information. Originally, the Department did not include a cost burden for the annual modification in the proposal's estimates because there is no burden associated with obtaining the statements from the financial institutions and the amount of time required to transfer the information to the SAR was believed to be nominal. Commenters, however, observed that modifying the SAR to include a list of financial institutions holding or issuing qualified plan assets and reporting the amount of those assets would require a professional's time each year to accomplish because assets and amounts will typically change from year to year. The Department has taken these comments into consideration, and concludes that they support an adjustment of the hour and cost burdens originally estimated for annual modification of the SAR. This adjustment results in increases of 10,643 hours and $3.7 million from prior estimates for the 425,709 plans required to modify the SAR for changes in the assets and amounts annually. This estimate is based on an average of 15 minutes of a professional's time at $39 per hour each year, and the assumption that 90% of plans purchase services to comply with SAR requirements. Again, some plans may require more time to modify the SAR listing each year, but the Department notes that the time required for annual modifications will be reduced to the extent that plans and service providers are in a position to invest in the modification of systems and SAR formatting to fully automate the annual modification process.

It should be noted that the adjustments to the assumptions described above would have resulted in more substantial increases in burden estimates in the absence of the modification of the requirements of the proposal as they relate to those individual account plans in which investments are individually directed. As described in detail above in the Summary of Public Comments section of this Notice, the Department has modified both the definition of qualifying plan assets to include participant directed assets under specific circumstances and the disclosure provisions as they relate to participant directed assets. These changes have the effect of lowering the number of plans impacted by the SAR and system design modification and the annual asset listing requirement from 605,115 to 425,709 (179,406 small plans are reported on Form 5500 to have individually directed assets) while ensuring that the objectives of the regulation are met without the imposition of duplicative disclosure obligations. The participants in those 179,406 plans represent 3,512,000 of the 9,373,000 participants in all small pension plans.

It is possible that the estimate of individual account plans that will be excepted from the requirement to list assets, amounts, and institutions in the SAR because the investments are individually directed, and account statements for these assets are provided by the financial institutions to participants at least annually, will differ to some degree from the actual number that will be excepted. Because the Form 5500 data element used to estimate this number is an indicator that some or all of the assets of an individual account plan filer are individually directed, no data is available to support an estimate of the number of such plans in which all assets are individually directed. However, the Department is aware that the assets not subject to individual direction in these plans often include participant loans and employer securities, which are also excepted from the detailed SAR disclosure requirement. Accordingly, the Department believes that the actual degree of variation from the number of plans assumed to be excepted will be small.

In addition to addressing the privacy concerns raised by commenters with respect to the disclosure in the SAR of assets and amounts held in individually directed accounts, the Department also wished to address the coordination of the requirements of this rule with other statutory and regulatory requirements,[11] as well as existing business practices relevant to individually directed account plans. While not all plans that permit participants or beneficiaries to exercise control over assets in their individual accounts for purposes of this final rule would intend to meet all of the conditions of section 404(c) and related regulations, the Department believes that the majority of these plans do customarily make the statements of the financial institutions holding the individual account assets available to participants and beneficiaries at least annually, either to satisfy the conditions of section 404(c) [12] or as a result of the business practice of advising participants of their valued benefits.

Although the Department considered alternatives in the development of the final rule that would retain some individual-level SAR disclosure features for individually directed accounts while addressing privacy concerns, it ultimately concluded that providing an exception from plan level disclosures when statements from the regulated financial institutions are in fact provided annually to individually directed account holders would adequately protect the assets of these small plans while ensuring that the information collection is useful and non-duplicative. As a result, the total cost of system modification and annual modifications to the SAR is approximately $7 million lower than it would have been had this exception not been considered an appropriate response in light of both public comment and the principles of the Paperwork Reduction Act.

Finally, plan administrators are required under the regulation to make available for examination or furnish copies of the statements from the regulated financial institutions and the evidence of bonding when less than 95% of the assets of the plan are qualifying plans assets, to participants and beneficiaries who request them. The 3,512,000 participants in the 179,406 small individual account plans in which assets are reported on Form 5500 to be individually directed are assumed to be receiving annual statements related to their particular accounts and are therefore not included in the burden estimates for furnishing documents on request. The Department assumes that 5% of the remaining 5,681,000 participants in small plans will request this information annually. Because the documents already have been provided by bonding companies and financial institutions, the cost of compliance involves 5 minutes to ready the appropriate documents for mailing and 2 minutes of photocopying by a clerical worker, at $15 per hour, and mailing

[11] See section 404(c) of ERISA and the regulations issued thereunder, 29 CFR § 2550.404c–1 *et seq.*

[12] The burden of the disclosure provisions of the Department's regulation under section 404(c) of ERISA is accounted for separately under the currently approved OMB control number 1210–0090.

costs of $.37 per mailing. The hour burden for the in house furnishing of the documents is estimated at 3,419. The cost burden for the 90% of plans assumed to purchase services to comply with the requirement to make this additional information available upon request is estimated at $576,479. This estimate is lower than the $995,000 estimated in connection with the proposal due to the modification of the proposed requirements with respect to assets in the individual account of a participant or beneficiary over which the participant or beneficiary has the opportunity to exercise control, and with respect to which the participant is furnished a statement at least annually describing the assets held or issued by the financial institution issuing the statement.

In summary, the estimated hour and cost burdens of the information collection provisions of this final rule are as follows:

Agency: Pension and Welfare Benefits Administration, Department of Labor.

Title: ERISA Summary Annual Report Requirement.

OMB Number: 1210–0040.

Affected Public: Individuals or households; Business or other for-profit; Not-for-profit institutions.

Frequency of Response: Annually.

Total Respondents: 817,000.

Total Responses: 235,000,000.

Estimated Burden Hours: 1,404,924.

Estimated Annual Cost (Capital/Startup): $3,639,817.

Estimated Annual Costs (Operating and Maintenance): $115,687,000.

Total Annualized Costs: $119,327,000.

Persons are not required to respond to an information collection request unless it displays a currently valid OMB control number.

Unfunded Mandates Reform Act

For purposes of the Unfunded Mandates Reform Act of 1995 (Pub. L. 104–4), as well as Executive Order 12875, this rule does not include any Federal mandate that may result in expenditures by State, local or tribal governments, and does not impose an annual burden exceeding $100 million on the private sector.

Federalism Statement

Executive Order 13132 (August 4, 1999) outlines fundamental principles of federalism and requires the adherence to specific criteria by federal agencies in the process of their formulation and implementation of policies that have substantial direct effects on the States, the relationship between the national government and States, or on the distribution of power and responsibilities among the various levels of government. This final rule does not have federalism implications because it has no substantial direct effect on the States, on the relationship between the national government and the States, or on the distribution of power and responsibilities among the various levels of government. Section 514 of ERISA provides, with certain exceptions specifically enumerated, that the provisions of Titles I and IV of ERISA supercede any and all laws of the States as they relate to any employee benefit plan covered under ERISA. Further, this final rule amends annual reporting and disclosure regulations that have been in effect in similar form for many years pursuant to the Department's authority under section 104(a)(2)(A) of ERISA to prescribe, by regulation, simplified annual reports for pension plans with fewer than 100 participants. The amendments incorporated in this final rule do not alter the fundamental requirements of the statute with respect to the reporting and disclosure requirements for employee benefit plans, and as such have no implications for the States or the relationship or distribution of power between the national government and the States.

Small Business Regulatory Enforcement Fairness Act

The final rule being issued here is subject to the provisions of the Small Business Regulatory Enforcement Fairness Act of 1996 (5 U.S.C. 801 *et seq.*) (SBREFA) and has been transmitted to Congress and the Comptroller General for review.

Statutory Authority

These regulations are issued pursuant to authority contained in section 505 of ERISA (Pub. L. 93–406, 88 Stat. 894, 29 U.S.C. 1135) and sections 103(a) and 104(a) of ERISA, as amended, (Pub. L. 104–191, 110 Stat. 1936, 1951, 29 U.S.C. 1023 and 1024) and under Secretary of Labor's Order No. 1–87, 52 FR 13139, April 21, 1987.

List of Subjects in 29 CFR Part 2520

Accountants, Disclosure requirements, Employee benefit plans, Employee Retirement Income Security Act, Pension plans, and Reporting and recordkeeping requirements.

For the reasons set out in the preamble, Part 2520 of Chapter XXV of Title 29 of the Code of Federal Regulations is amended as follows:

PART 2520—RULES AND REGULATIONS FOR REPORTING AND DISCLOSURE

1. The authority for Part 2520 continues to read as follows:

Authority: Secs. 101, 102, 103, 104, 105, 109, 110, 111(b)(2), 111(c) and 505, Pub. L. 93–406, 88 Stat. 840–52 and 894 (29 U.S.C. 1021–1025, 1029–31, and 1135); Secretary of Labor's Order No. 27–74, 13–76, 1–87, and Labor Management Services Administration Order 2–6.

Sections 2520.102–3, 2520.104b–1 and 2520.104b–3 also are issued under sec. 101(a), (c) and (g)(4) of Pub. L. 104–191, 110 Stat. 1936, 1939, 1951 and 1955, and sec. 603 of Pub. L. 104–204, 110 Stat. 2935 (29 U.S.C. 1185 and 1191c).

2. Section 2520.104–41 is amended by revising paragraph (c) as follows:

§ 2520.104–41 Simplified annual reporting requirements for plans with fewer than 100 participants.

* * * * *

(c) *Contents.* The administrator of an employee pension or welfare benefit plan described in paragraph (b) of this section shall file, in the manner prescribed in § 2520.104a–5, a completed Form 5500 ''Annual Return/Report of Employee Benefit Plan,'' including any required schedules or statements prescribed by the instructions to the form, and, unless waived by § 2520.104–46, a report of an independent qualified public accountant meeting the requirements of § 2520.103–1(b).

* * * * *

3. Section 2520.104–46 is amended by revising paragraphs (b)(1) and (d) to read as follows:

§ 2520.104–46 Waiver of examination and report of an independent qualified public accountant for employee benefit plans with fewer than 100 participants.

* * * * *

(b) *Application.* (1)(i) The administrator of an employee pension benefit plan for which simplified annual reporting has been prescribed in accordance with section 104(a)(2)(A) of the Act and § 2520.104–41 is not required to comply with the annual reporting requirements described in paragraph (c) of this section, provided that with respect to each plan year for which the waiver is claimed —

(A)(1) At least 95 percent of the assets of the plan constitute qualifying plan assets within the meaning of paragraph (b)(1)(ii) of this section, or

(2) Any person who handles assets of the plan that do not constitute qualifying plan assets is bonded in

accordance with the requirements of section 412 of the Act and the regulations issued thereunder, except that the amount of the bond shall not be less than the value of such assets;

(B) The summary annual report, described in § 2520.104b–10, includes, in addition to any other required information:

(*1*) Except for qualifying plan assets described in paragraph (b)(1)(ii)(A), (B) and (F) of this section, the name of each regulated financial institution holding (or issuing) qualifying plan assets and the amount of such assets reported by the institution as of the end of the plan year;

(*2*) The name of the surety company issuing the bond, if the plan has more than 5% of its assets in non-qualifying plan assets;

(*3*) A notice indicating that participants and beneficiaries may, upon request and without charge, examine, or receive copies of, evidence of the required bond and statements received from the regulated financial institutions describing the qualifying plan assets; and

(*4*) A notice stating that participants and beneficiaries should contact the Regional Office of the U.S. Department of Labor's Pension and Welfare Benefits Administration if they are unable to examine or obtain copies of the regulated financial institution statements or evidence of the required bond, if applicable; and

(C) in response to a request from any participant or beneficiary, the administrator, without charge to the participant or beneficiary, makes available for examination, or upon request furnishes copies of, each regulated financial institution statement and evidence of any bond required by paragraph (b)(1)(i)(A)(*2*).

(ii) For purposes of paragraph (b)(1), the term ''qualifying plan assets'' means:

(A) Qualifying employer securities, as defined in section 407(d)(5) of the Act and the regulations issued thereunder;

(B) Any loan meeting the requirements of section 408(b)(1) of the Act and the regulations issued thereunder;

(C) Any assets held by any of the following institutions:

(*1*) A bank or similar financial institution as defined in § 2550.408b–4(c);

(*2*) An insurance company qualified to do business under the laws of a state;

(*3*) An organization registered as a broker-dealer under the Securities Exchange Act of 1934; or

(*4*) Any other organization authorized to act as a trustee for individual retirement accounts under section 408 of the Internal Revenue Code.

(D) Shares issued by an investment company registered under the Investment Company Act of 1940;

(E) Investment and annuity contracts issued by any insurance company qualified to do business under the laws of a state; and,

(F) In the case of an individual account plan, any assets in the individual account of a participant or beneficiary over which the participant or beneficiary has the opportunity to exercise control and with respect to which the participant or beneficiary is furnished, at least annually, a statement from a regulated financial institution referred to in paragraphs (b)(1)(ii)(C), (D) or (E) of this section describing the assets held (or issued) by such institution and the amount of such assets.

(iii)(A) For purposes of this paragraph (b)(1), the determination of the percentage of all plan assets consisting of qualifying plan assets with respect to a given plan year shall be made in the same manner as the amount of the bond is determined pursuant to §§ 2580.412–11, 2580.412–14, and 2580.412–15.

(B) Examples. Plan A, which reports on a calendar year basis, has total assets of $600,000 as of the end of the 1999 plan year. Plan A's assets, as of the end of year, include: investments in various bank, insurance company and mutual fund products of $520,000; investments in qualifying employer securities of $40,000; participant loans, meeting the requirements of ERISA section 408(b)(1), totaling $20,000; and a $20,000 investment in a real estate limited partnership. Because the only asset of the plan that does not constitute a ''qualifying plan asset'' is the $20,000 real estate investment and that investment represents less than 5% of the plan's total assets, no bond would be required under the proposal as a condition for the waiver for the 2000 plan year. By contrast, Plan B also has total assets of $600,000 as of the end of the 1999 plan year, of which $558,000 constitutes ''qualifying plan assets'' and $42,000 constitutes non-qualifying plan assets. Because 7%—more than 5%—of Plan B's assets do not constitute ''qualifying plan assets,'' Plan B, as a condition to electing the waiver for the 2000 plan year, must ensure that it has a fidelity bond in an amount equal to at least $42,000 covering persons handling non-qualifying plan assets. Inasmuch as compliance with section 412 requires the amount of bonds to be not less than 10% of the amount of all the plan's funds or other property handled, the bond acquired for section 412 purposes may be adequate to cover the non-qualifying plan assets without an increase (i.e., if the amount of the bond determined to be needed for the relevant persons for section 412 purposes is at least $42,000). As demonstrated by the foregoing example, where a plan has more than 5% of its assets in non-qualifying plan assets, the bond required by the proposal is for the total amount of the non-qualifying plan assets, not just the amount in excess of 5%.

* * * * *

(d) *Limitations.* (1) The waiver described in this section does not affect the obligation of a plan described in paragraph (b) (1) or (2) of this section to file a Form 5500 ''Annual Return/Report of Employee Benefit Plan,'' including any required schedules or statements prescribed by the instructions to the form. See § 2520.104–41.

(2) For purposes of this section, an employee pension benefit plan for which simplified annual reporting has been prescribed includes an employee pension benefit plan which elects to file a Form 5500 as a small plan pursuant to § 2520.103–1(d) with respect to the plan year for which the waiver is claimed. See § 2520.104–41.

(3) For purposes of this section, an employee welfare benefit plan that covers fewer than 100 participants at the beginning of the plan year includes an employee welfare benefit plan which elects to file a Form 5500 as a small plan pursuant to § 2520.103–1(d) with respect to the plan year for which the waiver is claimed. See § 2520.104–41.

(4) A plan that elects to file a Form 5500 as a large plan pursuant to § 2520.103–1(d) may not claim a waiver under this section.

Signed at Washington, D.C., this 16th day of October, 2000.

Leslie B. Kramerich,

Acting Assistant Secretary, Pension and Welfare Benefits Administration, U.S. Department of Labor.

[FR Doc. 00–26880 Filed 10–18–00; 8:45 am]

BILLING CODE 4510–29–P

Federal Register

Thursday,
October 19, 2000

Part V

Department of Health and Human Services

42 CFR Part 124

Compliance Alternatives for Provision of Uncompensated Services; Proposed Rule

DEPARTMENT OF HEALTH AND HUMAN SERVICES

42 CFR Part 124

RIN 0906–AA52

Compliance Alternatives for Provision of Uncompensated Services

AGENCY: Health Resources and Services Administration, HHS.

ACTION: Proposed rules.

SUMMARY: The rules proposed below would revise a compliance alternative applicable to health care facilities with Hill-Burton uncompensated services obligations. The revised compliance alternative would provide a more flexible compliance standard for facilities that principally serve nonpaying patient populations by reducing the amount of time needed to qualify for certification under the alternative and by providing for a provisional certification, where a facility is unable to qualify for full certification. The rules proposed below would also provide a compliance alternative for obligated facilities with histories of uncompensated services deficits, to enable them to make up the deficits on a timely basis. These revisions would have the effect of making it easier for facilities with uncompensated services obligations to meet those obligations, while still ensuring the availability of uncompensated services to persons unable to pay.

DATES: To be considered, the agency must receive comments on this proposed rule on or before December 18, 2000.

ADDRESSES: Submit comments in writing to Division of Facilities Compliance and Recovery, Office of Special Programs, Health Resources and Services Administration, 5600 Fishers Lane, Room 10C–16, Rockville, MD 20857 or submit comments by fax to 301–443–0619.

FOR FURTHER INFORMATION CONTACT: Mr. Eulas Dortch, 301–443–5656.

SUPPLEMENTARY INFORMATION: The Secretary of Health and Human Services proposes below to revise certain requirements relating to the compliance by health care facilities that received assistance under Title VI or Title XVI of the Public Health Service Act, 42 U.S.C. 291, *et seq.*, and 42 U.S.C. 300q, *et seq.* with their assurance, given as a condition of such assistance, that they would provide a reasonable volume of services to persons unable to pay therefor. The regulations establishing the requirements for complying with this assurance, which is commonly known as the ''uncompensated services'' assurance, are codified at 42 CFR Part 124, Subpart F. The rules proposed below would revise one of several current compliance alternatives, to decrease the number of years needed to qualify for the alternative and to permit qualification on a provisional basis. The rules proposed below would also add another compliance alternative, designed for otherwise compliant Title VI-assisted facilities that are in chronic deficit in meeting their uncompensated services obligations.

I. Background

The Hill-Burton uncompensated services regulations date, in their present form, back to 1979, when regulations containing the basic components of the present regulations were promulgated. The 1979 regulations for the first time established a purely quantitative measure of the statutory ''reasonable volume of services'; this quantitative measure was a total'' obligation measured in dollars, broken down into annual compliance levels. They also provided that a facility that failed to provide in a given year uncompensated services in an amount sufficient to meet its annual compliance level would have a ''deficit,'' which it would have to make up in subsequent years. If not made up, the deficit (along with any additional deficits in later years) would accumulate, and be adjusted by any increases in the medical Consumer Price Index (CPI). *See*, § 124.503(b)(3).

In the years since 1979, the regulations have been amended several times—in 1986, 1987, 1994, and 1995. Aside from the amendment of the basic regulatory structure effected by the 1987 amendment, the rest of the amendments were directed at creating various alternative methods by which facilities could comply with their obligation to provide a reasonable volume of uncompensated services to persons unable to pay. These various ''compliance alternatives'' appear at §§ 124.513–124.516 of Subpart F. Although each of the compliance alternatives is addressed to different types of facilities, all of the facilities that qualify for the compliance alternatives share the same basic characteristics: they provide significant amounts of free or below cost care to persons unable to pay for that care, but, for various reasons, are unable to receive sufficient credit for the care they provide to meet their Hill-Burton uncompensated services obligations under the compliance standards codified at 42 CFR §§ 124.501–124.512. As a consequence, prior to the adoption of the compliance alternatives set out at §§ 124.513–124.516, these types of facilities were generally running uncompensated services deficits, despite providing substantial services on a free or below-cost basis to poor individuals. The compliance alternatives were adopted to address this anomaly.

Over the years since 1979, the number of facilities with outstanding Hill-Burton uncompensated services obligations has shrunk from approximately 5,000 in 1979 to the present level of approximately 850. Thus, approximately 4,150 Hill-Burton assisted facilities have fulfilled their obligation, provided as a condition of the federal assistance received, to provide a ''reasonable volume of uncompensated services to persons unable to pay therefor.'' However, a number of the remaining Hill-Burton obligated facilities operate compliant, fully expanded uncompensated services programs but fail to receive sufficient uncompensated services requests to satisfy their annual dollar obligations. (''Fully expanded'' means that the facilities make available on request, all of their services at no charge to persons unable to pay up to the limit of Category B eligibility (for facilities other than nursing homes) or Category C eligibility (for nursing homes).) Thus, they run Hill-Burton deficits on a chronic basis, and those deficits are adjusted upwards by the percentage change in the medical CPI, pursuant to § 124.503(b)(3). The Department believes that many of these facilities may never be able to make up their deficits under the present requirements.

A few statistics indicate the dimensions of the problem. As of the end of 1998, of the 424 Hill-Burton facilities in deficit, 226 had operated a fully expanded, compliant program for at least a year. Of these 226 facilities, 117 (52 percent, or 28 percent of the total number of facilities in deficit) had operated a fully expanded program for the last three years, and, despite providing over $73 million in uncompensated services in that period, saw their collective deficit increase from $178,724,130 to $180,748,408—an increase of one percent—in the same period. Of these 226 facilities, 64 facilities (28 percent, or 15 percent of the total in deficit) operated fully expanded programs for the last two years, and, despite providing over $36 million in uncompensated services in that period, saw their collective deficit decrease only $10.8 million, or 13 percent for that period, while in 33 of the 64 facilities, the deficits increased.

Of the 226 facilities, 45 facilities (20 percent, or 11 percent of the total in deficit) operated fully expanded programs in the last year and, despite providing over $9.8 million in uncompensated services in that period, saw their collective deficit increase from $57,374,195 to $61,739,838—an increase of 7.6 percent—in that period. It is projected that, because of the increasing deficits a number of these facilities are experiencing, 81 facilities will have at least another 20 years under obligation, and 53 of these 81 will have obligations extending for the next 100 years.

II. Proposed Rules

The rules proposed below share the objective of the prior compliance alternatives. Like those compliance alternatives, the rules proposed below have the goal of enabling facilities, which, by the nature of their operations have great difficulty or find it impossible to meet the dollar volume requirements of the general regulations but nonetheless provide significant uncompensated services to persons unable to pay, to comply with and complete their uncompensated services obligations. A corollary goal of this objective is the reduction or elimination of the uncompensated services deficits of such facilities.

In the case of the proposed amendment to § 124.516, the so-called ''charitable facility'' compliance alternative, the proposed rule would permit a provisional certification, to make it easier for facilities to qualify for the alternative. *See*, proposed § 124.516(d). Facilities could be provisionally certified, with credit toward their obligation earned during the period of provisional certification if they met the conditions of the provisional certification and with no credit earned if they failed to meet the conditions of the provisional certification. *See*, proposed § 124.516(e)(2). The proposed amendment to § 124.516 thus would enable facilities whose operations in fact qualify them for the charitable facility alternative to start earning credit under that alternative at the earliest possible date, instead of requiring a three-year track record, which is required under the alternative in its present form.

In the case of the proposed new compliance alternative set out at proposed § 124.517, the proposed rule would provide a means by which facilities in deficit, which remain in deficit despite running procedurally compliant uncompensated services programs, could eliminate their deficits and complete their obligations in a reasonable time frame. The compliance alternative at proposed § 124.517 is available to facilities that do not restrict the availability of uncompensated services to their patient population in any way—*i.e.*, they do not restrict the type of services of the facility available on an uncompensated basis, and they do not restrict eligibility for those uncompensated services (for example, by limiting uncompensated services to Category A individuals only, or by charging Category B or, for nursing homes, Category C individuals). In addition, those facilities must comply with the procedural requirements of the standard regulations with respect to notice, eligibility determinations, recordkeeping requirements, and so on. Also, these facilities provide broad notice of their program to provide services to the poor by:

1. Posting Federally supplied Hill-Burton signs, in prescribed locations, that describe the facilities' obligation to provide uncompensated services to the poor and specify where to file complaints;

2. Publishing notice of their Federal obligation in local newspapers, describing their allocation plan which includes all of their services to eligible persons requesting uncompensated services with incomes up to twice the poverty guidelines, in the case of hospitals, and up to triple the poverty guidelines for nursing homes;

3. Distributing, to each person coming to the facilities for services, specific written notification of the Hill-Burton obligation, including the allocation plan, income eligibility criteria, timeframes for facilities to make determinations of patients' Hill-Burton eligibility, and where to make application for Hill-Burton assistance.

Thus, it is clear that Hill-Burton facilities qualifying for the proposed alternative are unique from other facilities located in their areas. Although the non-Hill-Burton facilities may provide charity care, their programs tend not to be publically visible and often are mere writeoffs to charity after they have exhausted efforts to collect payments from the patients.

Where a facility fails to meet its annual compliance level despite the existence of an unrestricted program, the Secretary believes that there is clear evidence that there is insufficient demand for the uncompensated services offered and that the facility should not have to incur a deficit due to a failure of demand. The proposed compliance alternative addresses this issue. In addition, we believe that the compliance alternative will provide a mechanism that will facilitate the goal of making up large deficits. The sheer size of a number of deficits leads to a level of discouragement that can affect a facility's performance. Where this has happened, the existence of the deficit has the perverse effect of harming, rather than helping, the pool of eligible individuals such facilities serve. The compliance alternative should encourage facilities with chronic deficits to reopen their uncompensated services programs and complete their obligations. This expansion would result in more uncompensated services provided to persons unable to pay. For example, based on the most recent data available at the time the NPRM was developed, hospitals which began operating fully expanded programs in fiscal year 1997 provided an average of 22 percent more uncompensated services than in the previous year under a limited program. Despite the increase in services, their average Hill-Burton deficit increased by 6 percent due to the effect of the CPI adjustment applied to large deficits. Nursing homes which began operating fully expanded programs in fiscal year 1997 provided an average of 39 percent more uncompensated services than in the previous year. Despite the increase in services, their average Hill-Burton deficit increased by 16 percent, also because of the CPI adjustment.

Thus, while the NPRM would likely result in more facilities operating fully expanded programs, the greater benefit is that more uncompensated services will be provided during their periods of obligation.

Approximately 188 hospitals nationwide could qualify for the proposed alternative once they begin to implement compliant and fully expanded uncompensated services programs. Significant is the fact that only four States have more than eight potentially qualifying facilities: New York, 32; Pennsylvania, 22; Wisconsin, 13; and Michigan, 12. Within the State of New York, 21 of the 32 facilities are the sole hospital care provider within their municipality. In Pennsylvania, this is true for 13 of the 27 facilities; in Wisconsin, 12 of the 13 facilities; and in Michigan, 10 of the 12 facilities. This means that these facilities are not meeting their uncompensated services obligations because there are not enough Hill-Burton eligible people in their communities. They are not shifting the burden of caring for the poor to other facilities since in most cases the Hill-Burton obligated facilities are the only community providers.

The proposed alternative could impact as many as 121 nursing homes

nationwide once they all begin to implement compliant and fully expanded uncompensated services programs. Significant is the fact that only two States, Michigan with 20 facilities and Ohio, with 15 facilities, have more than seven qualifying nursing homes. Thirty States have three or fewer facilities, with 15 of the States having no facilities. Further, the typical nursing home has 75–90 percent of its patients covered by Medicaid and Medicare, leaving few and sometimes no Hill-Burton eligible patients for credit against their obligations.

For these reasons, we conclude that where a Hill-Burton facility has a record of operating a visible, compliant, and fully expanded uncompensated services program, its uncompensated services deficit is due to a lack of community need.

Proposed § 124.517 provides that an existing deficit may be made up by converting the deficit to years and providing uncompensated services in compliance with the compliance alternative for the additional period of time so calculated. *See,* proposed § 124.517(d). The concept underlying the method proposed is to determine, for years prior to the first year in which the facility operated a compliant, fully expanded program, what percentage the facility's deficit is of its total obligation and then to multiply the facility's total period of obligation by that percentage to determine how many years of service that deficit represents; from that point, the years in compliance with the alternative are subtracted from the deficit years to determine how many years and days of obligation would remain under the alternative. The following examples illustrate how this deficit-to-years conversion would work.

Example A: Facility Where 20-Year Statutory Period Has Ended

Assumed facts: (1) Fiscal year-end date: December 31; (2) 20-year end date: April 1, 1987; (3) year or years in which facility operated a fully expanded, compliant program: 1 (1998); (4) years in period of obligation: 7 years, 91 days (7.249 years); (5) total compliance level obligation in 1997 dollars: $356,684; (6) total outstanding deficit through 1997: $160,116.

Calculation: (1) Divide the total deficit, prior to ''alternative years'' by the total obligation: $160,116/$356,684 = .45 (percentage of deficit); (2) multiply the percentage of deficit by the years in the period of obligation: .45 × 7.249 = 3.26 (number of deficit years, under the alternative); (3) subtract the number of compliant, fully expanded years: 3.26 years—1 year = 2.26 years (number of years to be made up under the alternative); (4) multiply the fractional part of the year by 365: .26 × 365 = 95 (fraction converted to days); (5) add the whole years to the number of days under obligation: 2 years + 95 days = 2 years, 95 days (period of time under compliance alternative for complete deficit make-up); (6) add the years and days to the end of the last fiscal year for which the facility operated a fully expanded program: December 31, 1998 + 2 years, 95 days = April 5, 2001.

Example B: Facility Where the 20-Year Statutory Period Has Not Yet Ended

Assumed facts: (1) Fiscal year-end date: December 31; (2) 20-year end date: April 1, 2000; (3) year or years in which facility operated a fully expanded, compliant program: 2 (1998 and 1999); (4) years in period of obligation through 1997: 18 years; (5) total compliance level obligation in 1997 dollars: $356,684; (6) total outstanding deficit through 1997: $160,116.

Calculation: (1) Divide the total deficit by the total obligation through fiscal year 1997: $160,116/$356,684 = .45 (percentage of deficit); (2) multiply the percentage of deficit by the years in period of obligation through fiscal year 1997: .45 × 18 = 8.1 (number of deficit years, under the alternative); (3) subtract the number of compliant, fully expanded years: 8.1 years—2 years = 6.1 years (number of years to be made up under the alternative); (4) multiply the fractional part of the year by 365: .1 × 365 = 37 (the number of days to be added to the whole years); (5) add the whole years to the number of days under obligation: 6 years + 37 days = 6 years, 37 days; (6) add the years and days to the 20-year end date: April 1, 2000 + 6 years, 37 days = May 8, 2006.

Comments are invited on the above methodology and criteria.

In addition to the foregoing, various technical and conforming changes to the existing Subpart F are proposed.

III. Summary of Supporting Analyses

Executive Order 12866

Executive Order 12866 requires that all regulations reflect consideration of alternatives, costs, benefits, incentives, equity, and available information. Regulations must meet certain standards, such as avoiding unnecessary burden. Regulations which are ''significant'' because of cost, adverse effects on the economy, inconsistency with other agency actions, budgetary impact, or novel legal or policy issues require special analysis. The Department has determined that this rule will not have an annual effect on the economy of $100 million or more, and does not otherwise meet the definition of a ''significant'' rule under Executive Order 12866.

The Regulatory Flexibility Act

The Regulatory Flexibility Act requires that agencies analyze regulatory proposals to determine whether they create a significant impact on a substantial number of small entities. As the total universe of facilities with outstanding Hill-Burton obligations is small (approximately 850 facilities) and approximately half of these are presently either without deficit or have elected to comply with their uncompensated services obligations through other compliance options, it is not anticipated that the proposal will affect a substantial number of small entities, within the meaning of the Act. Moreover, the impact of the proposed rules should be positive, as they would lessen the burden of compliance on those facilities that would elect to utilize either of the proposed compliance options. Accordingly, the Secretary certifies that the rules proposed below would not create a significant impact on a substantial number of small entities.

Paperwork Reduction Act

The proposed unrestricted availability compliance alternative for Title VI facilities rules do not contain any information collection requirements subject to OMB review under the Paperwork Reduction Act of 1995. The proposed amendment to the charitable facility compliance alternative rule contains information collections which are subject to review by the Office of Management and Budget (OMB) under the Paperwork Reduction Act of 1995. The underlying purpose of this rule is to decrease recordkeeping, reporting, and notification burden for the charitable facilities not already certified under the alternative. Facilities receiving prospective certification under the charitable facility compliance alternative will no longer be required to maintain extensive records on uncompensated services (§ 124.510(a)), but instead will have to maintain only records which document its eligibility for the compliance alternative (§ 124.510(b)). These documents are ordinarily retained by the facilities so the recordkeeping requirement imposes no additional burden. This change is expected to reduce the recordkeeping burden by 75 hours per facility per year.

Similarly, reporting burden will be reduced. Charitable facilities will be required to apply once for the certification (§ 124.516(c)), and

thereafter will need only to certify their continued eligibility annually (§ 124.509(b)). Currently, facilities in deficit status, which include charitable facilities obligated under the general rule, must file a report each year which documents the amount of uncompensated care provided (§ 124.509(a)). This change in reporting requirements is expected to reduce the reporting burden by 6 hours per facility in the first year, and by 13.5 hours per facility in subsequent years.

Finally, notification/disclosure burden will be eliminated, because the facilities will no longer be required to: (1) Publish a notice each year of the availability of uncompensated services (§ 124.504(a)); (2) provide individual written notices to each person seeking service in the facility (§ 124.504(c)); or (3) provide a determination of eligibility to each person applying for uncompensated service (§ 124.507). These changes are expected to reduce the notification burden by 380 hours per facility per year.

All sections of the regulations that contain reporting, recordkeeping, or notification/disclosure requirements previously have been approved by OMB under the Paperwork Reduction Act (OMB #0915–0077). The public is invited to provide comments on this information collection requirement so that the Department of Health and Human Services may:

(1) Evaluate whether the proposed collections of information are necessary for the proper performance of the functions of the agency, including whether the information will have practical utility;

(2) Evaluate the accuracy of the agency's estimates of the burdens of the collections of information, including the validity of the methodology and assumptions used;

(3) Enhance the quality, utility and clarity of the information to be collected; and

(4) Minimize the burden of the collections of information on those who are to respond, including through the use of appropriate automated, electronic, mechanical, or other technological collection techniques or other forms of information technology, e.g., permitting electronic submission of responses. Written comments should be sent to Mr. Eulas Dortch, Director, Division of Facilities Compliance and Recovery, Office of Special Programs, Health Resources and Services Administration, 5600 Fishers Lane, Room 10C–16, Rockville, MD 20857. The title, description, and respondent description of the information collections are available from Mr. Dortch with an estimate of the annual reporting and recordkeeping burden.

Included in the estimate is the time for reviewing instructions, searching existing data sources, gathering and maintaining the data needed, and completing and reviewing the collection of information.

Unfunded Mandates Reform Act

The proposed rules contain no Federal mandates for State, local, or tribal governments or the private sector.

Executive Order 13132

The proposed rules have no impact on federalism as set forth in Executive Order 13132, which became effective on November 8, 1999, replacing Executive Order 12612.

Environmental Impact Statement

The proposed rules have no impact on the quality of the human environment and, therefore, an Environmental Impact Statement is not required.

List of Subjects in 42 CFR Part 124

Grant programs—health, Health care, Health facilities, Loan programs—health, Low income persons, Reporting and recordkeeping requirements.

Dated: November 29, 1999.

Claude Earl Fox,

Administrator, Health Resources and Services Administration.

Approved: June 29, 2000.

Donna E. Shalala,

Secretary.

For the reasons set out in the preamble, it is proposed to amend part 124 of title 42, Code of Federal Regulations, as follows:

PART 124—MEDICAL FACILITY CONSTRUCTION AND MODERNIZATION

1. Revise the authority citation for part 124 to read as follows:

Authority: 42 U.S.C. 216, 300r, 300s, unless otherwise noted.

Subpart F—Reasonable Volume of Uncompensated Services to Persons Unable to Pay

2. Revise the first sentence of § 124.503(c)(1) to read as follows:

§ 124.503 Compliance level.

* * * * *

(c) * * * (1) Except for facilities certified under § 124.513, § 124.514, § 124.515, § 124.516, or § 124.517, if a facility provides in a fiscal year uncompensated services in an amount exceeding its annual compliance level, it may apply the amount of excess to reduce its annual compliance level in any subsequent fiscal year. * * *

* * * * *

3. Revise the heading and introductory text of paragraph (a) of § 124.508 to read as follows:

§ 124.508 Cessation of uncompensated services.

(a) *Facilities not certified under § 124.513, § 124.514, § 124.515, § 124.516, or § 124.517.* Where a facility, other than a facility certified under § 124.513, § 124.514, § 124.515, § 124.516, or § 124.517, has maintained the records required by § 124.510(a) and determines based thereon that it has met its annual compliance level for the fiscal year or the appropriate level for the period specified in its allocation plan, it may, for the remainder of that year or period:

* * * * *

4. Revise the heading of paragraph (a) and add paragraph (e) to § 124.509 to read as follows:

§ 124.509 Reporting requirements.

(a) *Facilities not certified under § 124.513, § 124.514, § 124.515, § 124.516, or § 124.517.* * * *

* * * * *

(e) *Facilities certified under § 124.517.* If a facility certified under § 124.517 ceases to provide uncompensated services consistent with its certification under that section because of financial inability, it shall report such cessation to the Secretary within 90 days of the cessation and provide any documentation or information relating to the provision or cessation of uncompensated services that the Secretary may require.

* * * * *

5. Revise the heading of paragraph (a) and the heading and the first sentence of paragraph (b) of § 124.510 to read as follows:

§ 124.510 Record maintenance requirements.

(a) *Facilities not certified under § 124.513, § 124.514, § 124.515. § 124.516, or § 124.517.* * * *

* * * * *

(b) *Facilities certified under § 124.513, § 124.514, § 124.516, or § 124.517.* A facility certified under § 124.513, § 124.514, § 124.516, or § 124.517 shall retain, make available for public inspection consistent with personal privacy, and provide to the Secretary on request any records necessary to document compliance with the applicable requirements of this subpart in any fiscal year, including those documents provided to the Secretary

under § 124.513(c), § 124.514(c), § 124.516(c), or § 124.517(b), as applicable. * * *

* * * * *

6. Revise the first sentence of paragraph (a)(3) and paragraph (b)(1)(iii)(C) of § 124.511 to read as follows:

§ 124.511 Investigation and determination of compliance.

(a) * * *

(3) When the Secretary investigates a facility, the facility, including a facility certified under § 124.513, § 124.514, § 124.515, § 124.516, or § 124.517, shall provide to the Secretary on request any documents, records and other information concerning its operation that relate to the requirements of this subpart. * * *

* * * * *

(b) * * *

(1) * * *

(iii) * * *

(C) The facility had procedures in place that complied with the requirements of § 124.504(c), § 124.505, § 124.507, § 124.509, 125.510, § 124.513(b)(2), § 124.514(b)(2), § 124.515, § 124.516(b)(1) or (b)(2), as applicable, or § 124.517(b), and systematically and correctly followed such procedures.

* * * * *

7. Revise the introductory text of paragraph (b) and paragraph (c)(1) of § 124.512 to read as follows:

§ 124.512 Enforcement.

* * * * *

(b) A facility, including a facility certified under § 124.513, § 124.514, § 124.516, or § 124.517, that has denied uncompensated services to any person because it failed to comply with the requirements of this subpart will not be in compliance with its assurance until it takes whatever steps are necessary to remedy fully the noncompliance, including:

* * * * *

(c) * * *

(1) Have a system for providing notice to eligible persons as required by § 124.504(c), § 124.513(b)(2), § 124.514(b)(2), § 124.516 (b)(2)(ii)(A), or § 124.517(b)(2), as applicable;

* * * * *

8. Revise § 124.516 to read as follows:

§ 124.516 Charitable facility compliance alternative.

(a) *Effect of certification.* The Secretary may certify as a ''charitable facility'' a facility which meets the applicable requirements of this section. A facility which is certified or provisionally certified as a charitable facility is not required to comply with this subpart except as provided in this section.

(b) *Methods of qualification for certification or provisional certification.* (1) A facility may qualify for certification under this section if it meets the criteria of paragraph (c)(1) or paragraph (c)(2) of this section.

(2) A facility may qualify for a provisional certification under this section if it provides an assurance that meets the requirements of paragraph (d)(2) of this section.

(c) *Criteria for certification under paragraph (b)(1) of this section.* A facility may qualify for certification under paragraph (b)(1) of this section if it met the criteria of either paragraph (c)(1) or paragraph (c)(2) of this section for the fiscal year preceding the request for certification. A facility that seeks certification under paragraph (c)(2) of this section must also meet the requirements of paragraph (c)(2)(i) or paragraph (c)(2)(ii) of this section during each year of certification.

(1)(i) *For facilities that are nursing homes.* It received no monies directly from patients with incomes up to triple the current poverty line issued by the Secretary pursuant to 42 U.S.C. 9902, exclusive of amounts charged or received for purposes of claiming reimbursement under third party insurance or governmental programs, such as Medicaid or Medicare deductible or co-insurance amounts.

(ii) *For all other facilities.* It received no monies directly from patients with incomes up to double the current poverty line issued by the Secretary pursuant to 42 U.S.C. 9902, exclusive of amounts charged or received for purposes of claiming reimbursement under third party insurance or governmental programs, such as Medicaid or Medicare deductible or coinsurance amounts.

(2) It received at least 10 percent of its total operating revenue (net patient revenue plus other operating revenue, exclusive of any amounts received, or if not received, claimed, as reimbursement under Medicaid or Medicare) from philanthropic sources to cover operating deficits attributable to the provision of discounted services. Philanthropic sources include private trusts, foundations, churches, charitable organizations, state and/or local funding, and individual donors; and either—

(i) Provides health services without charge or at a substantially reduced rate (exclusive of amounts charged or received for purposes of claiming reimbursement under third party insurance or governmental programs, such as Medicaid or Medicare deductible or coinsurance amounts) to persons who are determined by the facility to qualify for such reduced charges under a program of discounted health services. A ''program of discounted health services'' must provide for financial and other objective eligibility criteria and procedures, including notice prior to nonemergency service, that assure effective opportunity for all persons to apply for and obtain a determination of eligibility for such services, including a determination prior to service where requested; or

(ii) Makes all services of the facility available to all persons at no more than a nominal charge, exclusive of amounts charged or received for purposes of claiming reimbursement under third party insurance or governmental programs, such as Medicaid or Medicare deductible or coinsurance amounts.

(d) *Procedures for certification*—(1) *Certification under paragraph (b)(1) of this section.* To be certified under paragraph (b)(1) of this section, a facility must submit to the Secretary, in addition to other materials that the Secretary may from time to time require, copies of the following:

(i) An audited financial statement for the fiscal year preceding the request or other documents prescribed by the Secretary, sufficient to show that the facility meets the criteria of paragraph (c)(1) or (c)(2) of this section, as applicable;

(ii) Where a facility claims qualification under paragraph (c)(2)(i) of this section, a complete description, and documentation where requested, of its program of discounted health services, including charging and collection policies of the facility, and eligibility criteria and notice and determination procedures used under its program(s) of discounted health services;

(iii) Where the facility claims qualification under paragraph (c)(1) or paragraph (c)(2)(ii) of this section, a complete description, and documentation where requested, of its admission, charging, and collection policies.

(2) *Provisional certification under paragraph (b)(2) of this section.* (i) In order to receive a provisional certification under paragraph (b)(2) of this section, prior to the beginning of the fiscal year for which provisional certification will be sought, the facility must submit to the Secretary an assurance, together with such documentation and in such form and manner as the Secretary may require, that it will operate during the fiscal year

a program that qualifies for certification under paragraph (b)(1) of this section.

(ii) No later than 90 days following the end of the fiscal year in which a facility has operated a provisionally certified program, the facility must submit to the Secretary, the documentation required, as applicable, under paragraph (d)(1) of this section.

(e) *Period of effectiveness*—(1) *Certification under paragraph (b)(1) of this section.* A certification by the Secretary under paragraph (b)(1) of this section remains in effect until withdrawn. The Secretary may disallow credit under this subpart when the Secretary determines that there has been a material change in any factor upon which certification was based or substantial noncompliance with this section. The Secretary may withdraw certification where the change or noncompliance has not been, in the Secretary's judgment, adequately remedied or otherwise continues.

(2) *Provisional certification under paragraph (b)(2) of this section.* Where the Secretary is satisfied, based on the documentation submitted by the facility in accordance with paragraph (d)(2)(ii) of this section and any other information available to the Secretary, that the facility has complied with the terms of its provisional certification under paragraph (b)(2) of this section, the Secretary shall certify the facility under paragraph (b)(1) of this section. If the Secretary finds that the facility has not complied with the terms of its provisional certification under paragraph (b)(2) of this section, the facility will receive no credit towards its uncompensated services obligation during the fiscal year of provisional certification.

(f) *Deficits*—(1) *Title VI-assisted facilities*—(i) *Title VI-assisted facilities with assessed deficits.* Where a facility assisted under title VI of the Act has been assessed as having a deficit under § 124.503(b) that has not been made up prior to certification under paragraph (b)(1) of this section, the facility may make up that deficit by either—

(A) Demonstrating to the Secretary's satisfaction that it met the applicable requirements of paragraph (c) of this section for each year in which a deficit was assessed; or

(B) Providing an additional period of service under this section on the basis of one year (or portion of a year) of certification for each year (or portion of a year) of deficit assessed. The period of obligation applicable to the facility under § 124.501(b) shall be extended until the deficit is made up in accordance with the preceding sentence.

(ii) *Title VI-assisted facilities with unassessed deficits.* Where any period of compliance under this subpart of a facility assisted under title VI of the Act has not been assessed, the facility will be presumed to have no allowable credit for the unassessed period. The facility may either—

(A) Make up such deficit in accordance with paragraph (f)(1)(i) of this section; or

(B) Submit an independent certified audit, conducted in accordance with procedures specified by the Secretary, of the facility's records maintained pursuant to § 124.510. If the audit establishes to the Secretary's satisfaction that no, or a lesser, deficit exists for the period in question, the facility will receive credit for the period so justified. Any deficit which the Secretary determines still remains must be made up in accordance with paragraph (f)(1)(i)(B) of this section.

(2) *Title XVI-assisted facilities*—(i) *Title XVI-assisted facilities with assessed deficits.* A facility assisted under title XVI of the Act which has an assessed deficit which was not made up prior to certification under paragraph (b)(1) of this section shall make up that deficit in accordance with paragraph (f)(1)(i) of this section. If it cannot make the showing required by that paragraph, it shall make up the deficit when its certification under paragraph (b)(1) of this section is withdrawn.

(ii) *Title XVI-assisted facilities with unassessed deficits.* Where any period of compliance under this subpart of a facility assisted under title XVI of the Act has not been assessed, the facility will be presumed to have no allowable credit for the unassessed period. The facility may either—

(A) Make up such deficit in accordance with paragraph (f)(1)(i) of this section; or

(B) Submit an independent certified audit, conducted in accordance with procedures specified by the Secretary, of the facility's records maintained pursuant to § 124.510. If the audit establishes to the Secretary's satisfaction that no, or a lesser, deficit exists for the period in question, the facility will receive credit for the period so justified. Any deficit which the Secretary determines still remains must be made up in accordance with paragraph (f)(2)(i) of this section.

§ 124.517 [Redesignated as § 124.518]

9. Redesignate § 124.517 as § 124.518 of subpart F.

10. Add a new § 124.517, to read as follows:

§ 124.517 Unrestricted availability compliance alternative for Title VI-assisted facilities.

(a) *Effect of certification.* The Secretary may certify a Title VI-assisted facility which meets the requirements of paragraph (b) of this section and the applicable requirements of this subpart as an unrestricted availability facility. A facility which is so certified is not required to comply with the requirements of this subpart, except as provided in this section or elsewhere in this subpart.

(b) *Criteria for qualification.* A facility may qualify for certification under this section if, for any fiscal year for which certification is sought, it meets the following criteria:

(1) It makes all services of the facility available without charge to all persons requesting uncompensated services from the facility who are eligible under § 124.505, including all persons coming within Category B and, if applicable, Category C.

(2) It complies with the notice and allocation plan requirements of §§ 124.504 and 124.506, except that all notices published or provided must describe an allocation plan and program consistent with paragraph (b)(1) of this section.

(3) It makes written determinations in accordance with § 124.507, except that all favorable determinations must indicate that the facility will provide uncompensated services at no charge.

(4) It provides uncompensated services consistent with the requirements of this section for the entire fiscal year for which certification is sought, except that a facility may cease providing such services and still receive credit, calculated in accordance with paragraph (d) of this section, where—

(i) The facility has completed its total uncompensated services obligation, including making up any deficit; or

(ii) The facility determines, and submits documentation which the Secretary finds, taking into account the factors identified in § 124.511(c), sufficient to establish that it is financially unable to continue to meet the requirements of this section for the remainder of the fiscal year.

(c) *Period of effectiveness.* A certification by the Secretary under this section remains in effect until withdrawn. The Secretary may withdraw certification under this section where the Secretary determines the facility is in substantial noncompliance with the requirements of paragraph (b) of this section and has not adequately remedied or otherwise continues such noncompliance. Where

the Secretary withdraws certification for part or all of a fiscal year or years, no credit may be granted for the period of unremedied substantial noncompliance.

(d) *Deficits.* (1) Where a Title VI-assisted facility has been assessed as having a deficit under § 124.503(b) that has not been made up prior to certification under this section, the facility may make up the deficit by providing uncompensated services in accordance with this section. The facility shall receive credit towards its deficit on the basis of one year, or part thereof, of credit towards each ''deficit year'' for each year, or part thereof, of operation in compliance with this section and the applicable requirements of this subpart.

(2) The number of ''deficit years'' of a facility shall be calculated using a methodology as determined by the Secretary. The calculation shall consider the ratio of a facility's deficit to its obligation for years not fully expanded, and shall provide a facility full credit for fully expanded compliant years.

[FR Doc. 00–26738 Filed 10–18–00; 8:45 am]

BILLING CODE 4160–15–P

Federal Register

Thursday,
October 19, 2000

Part VI

The President

Proclamation 7365—National Character Counts Week, 2000

Proclamation 7366—National Forest Products Week, 2000

Proclamation 7367—White Cane Safety Day, 2000

Federal Register
Vol. 65, No. 203
Thursday, October 19, 2000

Presidential Documents

Title 3—

The President

Proclamation 7365 of October 14, 2000

National Character Counts Week, 2000

By the President of the United States of America

A Proclamation

The term ''character'' is derived from an ancient Greek word meaning ''to inscribe,'' reflecting the conviction that character is not innate, but rather is instilled through the influence, example, and guidance of the people around us. One of our greatest responsibilities as adults and citizens, therefore, is to ensure that we teach our children, by word and deed, the values that will help them develop into men and women of strong character.

This vital endeavor begins with the family and particularly with parents, who are their children's first teachers. The process continues in our schools—not only in the classroom, but also in the hallways, in the cafeteria, and on the playing field. We have many opportunities to instill in our children the elements of good character—citizenship, fairness, compassion, honesty, tolerance, and responsibility—and it is up to every citizen and organization to make the most of these opportunities.

My Administration has strived to assist parents, caregivers, teachers, and religious and community leaders in this vital effort. We have worked with the entertainment industry to increase educational programming on television and to create a voluntary ratings system to help parents reinforce the values they want to impart to their children. And 4 years ago, I was proud to sign legislation that requires new televisions sold in our country to include the V-chip, a device that allows parents to control the programs that their children watch on television. Recognizing the significant amount of time our children spend in school, we have also created partnerships with States under the Elementary and Secondary Education Act to assist school districts in developing curriculum materials, providing teacher training, and integrating character education into the curriculum. We have funded innovative after-school programs to offer young people mentors and role models to inspire them and to engage them in productive activities at the end of the school day.

We have also promoted citizen service—one of the greatest character-building tools available to our society. Through initiatives such as America Reads, the Corporation for National and Community Service, the National Senior Service Corps, the Peace Corps, and AmeriCorps, Americans of every age, background, gender, and race are experiencing the rewards of helping others, and in the process becoming more responsible citizens. We can also teach young Americans a vital lesson about character by exercising our right to vote and participating in the democratic process—a process that Americans of notable character established more than two centuries ago.

NOW, THEREFORE, I, WILLIAM J. CLINTON, President of the United States of America, by virtue of the authority vested in me by the Constitution and laws of the United States, do hereby proclaim October 15 through October 21, 2000, as National Character Counts Week. I call upon the people of the United States, government officials, educators, religious, community, and business leaders to commemorate this week with appropriate ceremonies, activities, and programs.

IN WITNESS WHEREOF, I have hereunto set my hand this fourteenth day of October, in the year of our Lord two thousand, and of the Independence of the United States of America the two hundred and twenty-fifth.

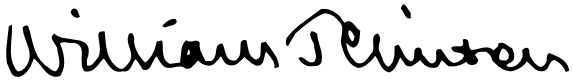

[FR Doc. 00–27111
Filed 10–18–00; 8:45 am]
Billing code 3195–01–P

Presidential Documents

Proclamation 7366 of October 14, 2000

National Forest Products Week, 2000

By the President of the United States of America

A Proclamation

In the early years of the 20th century, President Theodore Roosevelt challenged his fellow citizens to begin the vital task of conserving the precious natural resources with which America has been so abundantly blessed. As part of his notable conservation achievements, he consolidated 65 million acres of Federal forest reserves into the National Forest System and created the United States Forest Service to provide wise stewardship of these lands for future generations.

Today, the National Forest System comprises more than 190 million acres of forests and grasslands, a priceless remnant of the great wilderness that once stretched across our country. Whether sustaining ecosystems, supplying water, providing lumber, or offering recreation, these precious areas benefit millions of Americans.

We must continue to sustain the health and beauty of the forestlands President Roosevelt first set aside for us so many decades ago. I am proud that my Administration has made significant progress in improving the management of Federal forestlands. With science-based planning and research, we have sought to achieve a balance between strengthening protections for wildlife and water quality and providing a steady, sustainable supply of the building materials, paper products, and other commodities we need to meet the challenges of our growing economy.

America's forests have always offered us unique and irreplaceable benefits. They are a treasured inheritance, and we must ensure in this new century that our policies and actions sustain this precious legacy for the prosperity and well-being of generations to come.

To recognize the importance of our forests in ensuring the long-term welfare of our Nation, the Congress, by Public Law 86–753 (36 U.S.C. 123), has designated the week beginning on the third Sunday in October of each year as ''National Forest Products Week'' and has authorized and requested the President to issue a proclamation in observance of this week.

NOW, THEREFORE, I, WILLIAM J. CLINTON, President of the United States of America, do hereby proclaim October 15 through October 21, 2000, as National Forest Products Week. I call upon all Americans to observe this week with appropriate ceremonies and activities.

IN WITNESS WHEREOF, I have hereunto set my hand this fourteenth day of October, in the year of our Lord two thousand, and of the Independence of the United States of America the two hundred and twenty-fifth.

William J. Clinton

[FR Doc. 00–27112
Filed 10–18–00; 8:45 am]
Billing code 3195–01–P

Presidential Documents

Proclamation 7367 of October 14, 2000

White Cane Safety Day, 2000

By the President of the United States of America

A Proclamation

Last month at the Olympic Games in Sydney, American runner Marla Runyan made history in the women's 1500-meter race. She was not considered a favorite in the event and won no medals, placing ninth in the final competition. But as the first legally blind athlete ever to qualify for and compete in an Olympic event, Marla set an extraordinary precedent and proved to millions of people across the globe that disability need not be a limitation on achievement or a barrier to success.

Marla Runyan's accomplishment reflects the spirit of two historic pieces of legislation whose milestone anniversaries we celebrate this year. Ten years ago, the Americans with Disabilities Act was signed into law to guarantee access to public accommodations and services and to outlaw workplace discrimination for people with disabilities. Twenty-five years ago, the Individuals with Disabilities Education Act became law, ensuring that people with disabilities have access to a free and appropriate public education. Both of these laws have made a significant impact on the lives of millions of Americans with disabilities by allowing them to pursue their dreams and make their own contributions to our society.

But even before passage of these landmark laws, the white cane was helping to open doors of opportunity for many blind and visually impaired Americans. With proper training, people using the white cane can enjoy greater mobility and safety by determining the location of curbs, steps, uneven pavement, and other physical obstacles in their path. The white cane has given them the freedom to travel independently to their schools and workplaces and to participate more fully in the life of their communities.

The white cane is a simple tool, but, like Marla Runyan's accomplishments, it reminds us that the only barriers against people with disabilities are discriminatory attitudes and practices that our society has too often placed in their way. As we observe White Cane Safety Day, let us reaffirm our commitment to building a society where we embrace the talents, energy, and contributions of every individual.

To honor the many achievements of blind and visually impaired citizens and to recognize the white cane's significance in advancing independence, the Congress, by joint resolution approved October 6, 1964, has designated October 15 of each year as ''White Cane Safety Day.''

NOW, THEREFORE, I, WILLIAM J. CLINTON, President of the United States of America, do hereby proclaim October 15, 2000, as White Cane Safety Day. I call upon the people of the United States, government officials, educators, and business leaders to observe this day with appropriate programs, ceremonies, and activities.

IN WITNESS WHEREOF, I have hereunto set my hand this fourteenth day of October, in the year of our Lord two thousand, and of the Independence of the United States of America the two hundred and twenty-fifth.

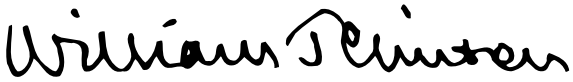

[FR Doc. 00–27113
Filed 10–18–00; 8:45 am]
Billing code 3195–01–P

Reader Aids

Federal Register

Vol. 65, No. 203

Thursday, October 19, 2000

CUSTOMER SERVICE AND INFORMATION

Federal Register/Code of Federal Regulations

General Information, indexes and other finding aids	**202–523–5227**
Laws	**523–5227**
Presidential Documents	
Executive orders and proclamations	**523–5227**
The United States Government Manual	**523–5227**
Other Services	
Electronic and on-line services (voice)	**523–4534**
Privacy Act Compilation	**523–3187**
Public Laws Update Service (numbers, dates, etc.)	**523–6641**
TTY for the deaf-and-hard-of-hearing	**523–5229**

ELECTRONIC RESEARCH

World Wide Web

Full text of the daily Federal Register, CFR and other publications:

http://www.access.gpo.gov/nara

Federal Register information and research tools, including Public Inspection List, indexes, and links to GPO Access:

http://www.nara.gov/fedreg

E-mail

PENS (Public Law Electronic Notification Service) is an E-mail service for notification of recently enacted Public Laws. To subscribe, send E-mail to

listserv@www.gsa.gov

with the text message:

subscribe PUBLAWS-L your name

Use listserv@www.gsa.gov only to subscribe or unsubscribe to PENS. We cannot respond to specific inquiries.

Reference questions. Send questions and comments about the Federal Register system to:

info@fedreg.nara.gov

The Federal Register staff cannot interpret specific documents or regulations.

FEDERAL REGISTER PAGES AND DATE, OCTOBER

58635–58900 2
58901–59104 3
59105–59338 4
59339–59694 5
59695–60092 6
60093–60338 10
60339–60568 11
60569–60830 12
60831–61076 13
61077–61254 16
61255–62274 17
62275–62576 18
62577–62990 19

CFR PARTS AFFECTED DURING OCTOBER

At the end of each month, the Office of the Federal Register publishes separately a List of CFR Sections Affected (LSA), which lists parts and sections affected by documents published since the revision date of each title.

3 CFR

Proclamations:
7346 59311
7347 59313
7348 59315
7349 59317
7350 59321
7351 59329
7352 60567
7353 60569
7354 60571
7355 60573
7356 60575
7357 60577
7358 60579
7359 60831
7360 60833
7361 60835
7362 61255
(Amended by proc. 7364) 62575
7363 61257
7364 62575
7365 62985
7366 62987
7367 62989

Executive Orders:
July 9, 1910 (Revoked by PLO 7465) 61183
July 29, 1910 (Revoked by PLO 7465) 61183
November 25, 1910 (Revoked by PLO 7465) 61183
January 12, 1911 (Revoked by PLO 7465) 61183
December 21, 1911 (Revoked by PLO 7465) 61183
April 29, 1912 (Revoked by PLO 7465) 61183
June 10, 1912 (Revoked by PLO 7465) 61183
July 14, 1913 (Revoked by PLO 7465) 61183
June 6, 1914 (Revoked by PLO 7465) 61183
October 9, 1917 (Revoked by PLO 7465) 61183
October 20, 1917 (Revoked by PLO 7465) 61183
December 22, 1919 (Revoked by PLO 7465) 61183
June 6, 1929 (Revoked by PLO 7465) 61183
11625 (See 13170) 60827
13169 60581
13170 60827
13171 61251

Administrative Orders:
Presidential Determinations:
No. 2000–30 of September 19, 2000 59339
No. 2000–31 of September 28, 2000 59695
No. 2000–32 of September 29, 2000 59697
No. 2000–33 of September 29, 2000 59699

5 CFR
430 60837
591 58901
1201 58902
8301 58635

7 CFR
272 59105
274 59105
301 61077
956 61080
1230 62577

Proposed Rules
210 60502
226 60502
235 60502
245 60502
457 62311
905 .....58672, 60121
944 .....58672, 60121
1210 61122
1412 59759

8 CFR
234 58902
299 61259

Proposed Rules:
3 60384
212 60384

9 CFR
331 62579
391 60093
590 60093

Proposed Rules:
1 62650
2 62650

10 CFR
1 59270
2 59270
72 .....60339, 62581

13 59270
434 60000
435 60000
830 60292
Proposed Rules
72 60384
140 61283
430 ....59550, 59590, 59761

12 CFR

226 58903
263 60583
509 61260
510 61260
563b 60095
575 60095
Proposed Rules:
563b 60123
575 60123

13 CFR

121 60342
Proposed Rules:
119 60256
126 58963

14 CFR

25 60343
39 ....58640, 58641, 58645, 58647, 59701, 59703, 59705, 59707, 59709, 59710, 60347, 60349, 60845, 60846, 60848, 60850, 61083, 61085, 61262, 62275, 62276, 62280, 62281
61 60334
63 60334
65 60334
71 ....59341, 59711, 59712, 60352, 61087
73 59341
91 60352
93 60352
97 ....59342, 59345
108 60334
121 ....60334, 60352
135 ....60334, 60352
187 59713
383 61089
401 62812
417 62812
420 62812
1260 62900
1274 62900
Proposed Rules:
36 ....59634, 61125
39 ....58675, 58678, 58681, 58966, 59146, 59381, 59383, 60124, 60126, 60129, 60591, 60593, 60595, 60597, 60599, 60897, 61287, 61289, 62313, 62315, 62650, 62651
43 58878
45 58878
71 ....59762, 59763, 59764, 60385, 61125, 61126, 61127, 62653, 62654, 62655, 62656

15 CFR

101 59714
705 62599
732 62600
734 ....60852, 62600
738 60852
740 ....60852, 62600
742 ....58911, 60852, 62600
743 60852
744 ....60852, 62600
748 ....60852, 62600
770 62600
772 62600
774 ....58911, 60852, 62600
902 61264
922 60096

16 CFR

1 60857
311 60857
Proposed Rules:
Ch. II 58968
307 60899
313 59766

17 CFR

4 58648
30 ....60558, 60560
Proposed Rules:
240 59766

18 CFR

284 59111

19 CFR

10 ....59650, 59668
163 ....59650, 59668

20 CFR

Proposed Rules:
404 ....58970, 60584
416 ....58970, 60584

21 CFR

25 60499
73 ....59717, 60253
101 58917
172 60858
510 ....60097, 60585
522 61090
526 61091
556 61091
601 59718
801 62282
862 62285
872 60098
Proposed Rules:
801 62317

22 CFR

Proposed Rules:
51 60132

23 CFR

1275 59112

24 CFR

200 61072
203 60320
236 61072
291 60324
880 61072
881 61072
883 61072
888 58870
982 58870
985 58870
Proposed Rules:
888 60084

26 CFR

1 ....58650, 60585, 61091, 61268
602 61268
Proposed Rules:
1 ....58973, 59774, 60136, 61292
5f 61292
31 61292
301 60822

27 CFR

4 59719
Proposed Rules:
9 61129

28 CFR

0 60100
541 59725

29 CFR

1952 62610
2520 62958
4022 60859
4044 60859

30 CFR

42 59048
47 59048
56 ....59048, 61270
57 ....59048, 61270
62 61270
70 61270
71 61270
77 59048
206 62612
Proposed Rules:
920 59150
946 59152

31 CFR

Proposed Rules:
205 60796

32 CFR

706 ....61092, 61093, 61094, 61095, 61096, 61097, 61098, 61099, 62614
724 62614
733 62615
734 62616
752 60861
765 62619
1615 60100
Proposed Rules:
323 60900

33 CFR

66 59124
100 58652
110 62286
117 ....59126, 60359, 60360, 60361
154 62288
165 ....58654, 58655, 62286, 62289, 62290, 62292
Proposed Rules:
117 59780

36 CFR

Proposed Rules:
1190 58974
1191 ....58974, 62498
1258 60862

38 CFR

21 ....59127, 60499, 60724, 61100
Proposed Rules:
3 61132

39 CFR

20 60361
111 61102
Proposed Rules:
111 58682
502 58682

40 CFR

9 59894
35 58850
52 ....59128, 59727, 60101, 61104, 62295, 62620, 62624, 62626
60 61744
61 61744
63 ....59894, 61744
81 ....59128, 60362, 62295
85 59896
86 59896
132 59738
180 ....59346, 61270, 62629, 62631, 62634
271 ....59135, 61109
300 ....58656, 61112
403 59738
Proposed Rules:
52 ....58698, 59154, 59782, 60141, 60144, 61133, 61134, 62319, 62657, 62658, 62666, 62668, 62671, 62675, 62677, 62679, 62681
63 ....58702, 62414
81 ....59154, 60362, 62319
82 59783
123 59385
271 ....59155, 61135
403 59791
721 62319
1601 59155

41 CFR

Ch. 301 62637
101–40 60060
102–117 60060
Proposed Rules:
60–1 60816
60–250 60816
60–741 60816
61–250 59684

42 CFR

36 58918
409 62645
410 62645
412 59748
413 ....58919, 59748, 60104, 61112
422 59749
424 60366
440 60105
441 60105
489 ....58919, 59748, 61112, 62645
498 ....58919, 61112, 62645
Proposed Rules:
124 62976
410 62681
447 60151

43 CFR

Proposed Rules:
4 60602

44 CFR

59 60758
61 60758
64 ....61278, 61280

Proposed Rules:

65 60159
206 58720

47 CFR

1 ....59350, 60868
2 ....59350, 60108, 60869
20 ....58657, 60112, 62646
25 ....59140, 59749
27 60112
32 58661
54 58662
63 60113
64 58661
73 ....58920, 58921, 59144, 59145, 59751, 59752, 60378, 60379, 60585, 61113, 62299
87 ....59350, 60108
90 ....60379, 60869
95 60869
101 ....59350, 60382

Proposed Rules:

54 58721
73 ....59162, 59163, 59388, 59389, 59796, 59797, 60163, 60387, 60602, 61299, 62683
76 60387

48 CFR

Ch. 1 60542
2 60542
4 60542
5 60542
7 60542
15 60542
19 60542
52 60542
53 60542
931 62299
970 62299
1511 58921
1515 58921
1517 58921
1519 58921
1523 58921
1528 58921
1535 58921
1542 58921
1545 58921
1552 58921
1807 58931
1811 58931
1815 58931
1816 58931
1817 58931
1819 58931
1834 58931
1837 58932
1843 58931
1845 58931
1852 58931

Proposed Rules:

9904 59504

49 CFR

172 60382
173 60382
177 60382
375 58663
386 58663
391 59362

Proposed Rules:

1180 58974

50 CFR

17 ....58933, 60879, 62302
20 58664
25 62458
26 62458
29 62458
223 60383
600 59752
622 61114
635 ....60118, 60889
648 ....59758, 60118, 60586, 60892
660 59752
679 ....59380, 60587, 61264, 62646
697 61116

Proposed Rules:

17 ....58981, 59798, 60391, 60603, 60605, 60607, 61218, 62690, 62691
216 59164
622 ....59170, 60163
648 60396
660 ....59813, 62692
679 58727
697 61135

REMINDERS

The items in this list were editorially compiled as an aid to Federal Register users. Inclusion or exclusion from this list has no legal significance.

RULES GOING INTO EFFECT OCTOBER 19, 2000

COMMERCE DEPARTMENT

Export Administration Bureau

Export administration regulations:

Encryption items; revisions; published 10-19-00

DEFENSE DEPARTMENT

Navy Department

Miscellaneous rules:

Rules applicable to public; published 10-19-00

Personnel:

Assistance to and support of dependents; paternity complaints; published 10-19-00

Garnishment of pay of Naval military and civilian personnel for collection of child suppport and alimony; published 10-19-00

Naval Discharge Review Board; administrative changes; published 10-19-00

ENVIRONMENTAL PROTECTION AGENCY

Air quality implementation plans; approval and promulgation; various States:

California; published 9-19-00

Pesticides; tolerances in food, animal feeds, and raw agricultural commodities:

Norflurazon; published 10-19-00

Tebuconazole; published 10-19-00

Zinc phosphide; published 10-19-00

HEALTH AND HUMAN SERVICES DEPARTMENT

Food and Drug Administration

Administrative practice and procedure:

Good guidance practices; published 9-19-00

HEALTH AND HUMAN SERVICES DEPARTMENT

Health Care Financing Administration

Medicare:

Cardiac Pacemaker Registry; requirements removed; published 10-19-00

LABOR DEPARTMENT

Occupational Safety and Health Administration

State plans; development, enforcement, etc.:

North Carolina—

American Red Cross coverage; Federal enforcement level change; published 10-19-00

NATIONAL AERONAUTICS AND SPACE ADMINISTRATION

Grant and cooperative agreement recipients; administrative requirements reduction; published 10-19-00

TRANSPORTATION DEPARTMENT

Federal Aviation Administration

Airworthiness directives:

Eurocopter Canada; published 9-14-00

MD Helicopters, Inc.; published 9-14-00

Sikorsky; published 9-14-00

COMMENTS DUE NEXT WEEK

AGRICULTURE DEPARTMENT

Animal and Plant Health Inspection Service

Plant-related quarantine, foreign:

Fuji variety apples from Korea; comments due by 10-23-00; published 8-22-00

AGRICULTURE DEPARTMENT

Federal Crop Insurance Corporation

Crop insurance regulations:

Forage seeding crop; comments due by 10-25-00; published 9-25-00

AGRICULTURE DEPARTMENT

Forest Service

Alaska National Interest Lands Conservation Act; Title VIII implementation (subsistence priority):

Wildlife; 2001-2002 subsistence taking; comments due by 10-27-00; published 8-24-00

State and private forestry assistance:

Urban and Community Forestry Assistance Program; comments due by 10-25-00; published 9-25-00

COMMERCE DEPARTMENT

National Oceanic and Atmospheric Administration

Fishery conservation and management:

West Coast States and Western Pacific fisheries—

Pacific Coast groundfish; comments due by 10-23-00; published 10-6-00

Pacific Coast groundfish; comments due by 10-23-00; published 10-20-00

Ocean and coastal resource management:

Marine sanctuaries—

Commercial submarine cables; installation and maintenance; comments due by 10-23-00; published 8-23-00

DEFENSE DEPARTMENT

Federal Acquisition Regulation (FAR):

Commercial items; nongovernmental purposes; comments due by 10-27-00; published 8-28-00

Prompt payment and overpayment recovery; comments due by 10-27-00; published 8-28-00

ENERGY DEPARTMENT

Energy Efficiency and Renewable Energy Office

Energy conservation:

Commercial and industrial equipment; energy efficiency program—

Commercial packaged boilers; test procedures and efficiency standards; comments due by 10-23-00; published 8-9-00

Commercial water heaters, hot water supply boilers, and unfired hot water storage tanks; test procedures and efficiency standards; comments due by 10-23-00; published 8-9-00

Commerical air conditioners and heat pumps; test procedures and efficiency standards; comments due by 10-23-00; published 8-9-00

ENVIRONMENTAL PROTECTION AGENCY

Air pollutants, hazardous; national emission standards:

Cellulose products manufacturing; comments due by 10-27-00; published 8-28-00

Air quality implementation plans; approval and promulgation; various States:

Missouri; comments due by 10-23-00; published 8-24-00

Utah; comments due by 10-23-00; published 9-21-00

Hazardous waste program authorizations:

Pennsylvania; comments due by 10-26-00; published 9-26-00

Tennessee; comments due by 10-23-00; published 9-22-00

Tennesssee; comments due by 10-23-00; published 9-22-00

Hazardous waste:

Corrective Action Management Units; comments due by 10-23-00; published 8-22-00

Superfund program:

National oil and hazardous substances contingency plan—

National priorities list update; comments due by 10-23-00; published 8-24-00

FEDERAL COMMUNICATIONS COMMISSION

Common carrier services:

Foreign participation in U.S. telecommunications market; rules and policies; comments due by 10-24-00; published 10-10-00

Wireless telecommunications services—

Gulf of Mexico Service Area; cellular service and other commercial mobile radio services; correction; comments due by 10-26-00; published 9-26-00

Radio stations; table of assignments:

New Mexico; comments due by 10-23-00; published 9-15-00

Various States; comments due by 10-23-00; published 9-15-00

FEDERAL EMERGENCY MANAGEMENT AGENCY

Disaster assistance:

Cerro Grande fire assistance; comments due by 10-27-00; published 8-28-00

FEDERAL TRADE COMMISSION

Consumer financial information privacy; security program;

comments due by 10-24-00; published 10-6-00

GENERAL SERVICES ADMINISTRATION

Federal Acquisition Regulation (FAR):

Commercial items; nongovernmental purposes; comments due by 10-27-00; published 8-28-00

Prompt payment and overpayment recovery; comments due by 10-27-00; published 8-28-00

INTERIOR DEPARTMENT

Fish and Wildlife Service

Alaska National Interest Lands Conservation Act; Title VIII implementation (subsistence priority):

Wildlife; 2001-2002 subsistence taking; comments due by 10-27-00; published 8-24-00

Endangered and threatened species:

Chiricahua leopard frog; comments due by 10-27-00; published 9-27-00

Findings on petitions, etc.—

Western sage grouse; comments due by 10-23-00; published 8-24-00

INTERIOR DEPARTMENT

Surface Mining Reclamation and Enforcement Office

Permanent program and abandoned mine land reclamation plan submissions:

Montana; comments due by 10-25-00; published 9-25-00

LABOR DEPARTMENT

Construction and nonconstruction contracts; labor standards provisions:

Davis-Bacon Act et al.; construction and work site; definitions; comments due by 10-23-00; published 9-21-00

MORRIS K. UDALL SCHOLARSHIP AND EXCELLENCE IN NATIONAL ENVIRONMENTAL POLICY FOUNDATION

Freedom of Information Act and Privacy Act; implementation; comments due by 10-26-00; published 9-26-00

NATIONAL AERONAUTICS AND SPACE ADMINISTRATION

Federal Acquisition Regulation (FAR):

Commercial items; nongovernmental purposes; comments due by 10-27-00; published 8-28-00

Prompt payment and overpayment recovery; comments due by 10-27-00; published 8-28-00

NATIONAL ARCHIVES AND RECORDS ADMINISTRATION

Freedom of Information Act; implementation; revision and reorganization of regulations; comments due by 10-23-00; published 8-23-00

NUCLEAR REGULATORY COMMISSION

Rulemaking petitions:

Gallagher, Charles T.; comments due by 10-25-00; published 8-11-00

POSTAL SERVICE

International Mail Manual:

Postal rates, fees, and mail classifications; changes; comments due by 10-26-00; published 9-26-00

TRANSPORTATION DEPARTMENT

Coast Guard

Drawbridge operations:

Florida; comments due by 10-24-00; published 8-25-00

Vessel documentation and measurement:

Vessel ownership and financing; citizenship standards; comments due by 10-25-00; published 7-27-00

TRANSPORTATION DEPARTMENT

Disadvantaged business enterprise participation in DOT financial assistance programs; airport concessions; comments due by 10-23-00; published 9-8-00

Economic regulations:

Revenue and nonrevenue passengers; definitions; comments due by 10-23-00; published 8-22-00

TRANSPORTATION DEPARTMENT

Federal Aviation Administration

Administrative regulations:

Air traffic and related services for aircraft that transit U.S.-controlled airspace but neither take off from, nor land in, U.S.; fees; comments due by 10-27-00; published 10-6-00

Airworthiness directives:

Airbus; comments due by 10-27-00; published 9-27-00

Boeing; comments due by 10-24-00; published 8-25-00

Bombardier; comments due by 10-23-00; published 10-16-00

British Aerospace; comments due by 10-27-00; published 9-26-00

Cessna; comments due by 10-23-00; published 9-7-00

Eurocopter France; comments due by 10-27-00; published 8-28-00

Fairchild; comments due by 10-27-00; published 9-1-00

Raytheon; comments due by 10-27-00; published 9-7-00

Vulcanair S.p.A.; comments due by 10-25-00; published 9-22-00

Airworthiness standards:

Special conditions—

Boeing Model 777-200 series airplanes; comments due by 10-25-00; published 9-25-00

Class D airspace; comments due by 10-25-00; published 9-25-00

Class D and Class E4 airspace; comments due by 10-23-00; published 9-22-00

Class E airspace; comments due by 10-25-00; published 9-25-00

TRANSPORTATION DEPARTMENT

National Highway Traffic Safety Administration

Motor vehicle safety standards:

Platform lift systems for accessible vehicles and platform lift installations on vehicles; comments due by 10-25-00; published 7-27-00

TRANSPORTATION DEPARTMENT

Surface Transportation Board

Rail carriers:

Carload waybill sample reporting procedures; modification; comments due by 10-23-00; published 9-8-00

LIST OF PUBLIC LAWS

This is a continuing list of public bills from the current session of Congress which have become Federal laws. It may be used in conjunction with ''P L U S'' (Public Laws Update Service) on 202–523–6641. This list is also available online at http://www.nara.gov/fedreg.

The text of laws is not published in the **Federal Register** but may be ordered in ''slip law'' (individual pamphlet) form from the Superintendent of Documents, U.S. Government Printing Office, Washington, DC 20402 (phone, 202–512–1808). The text will also be made available on the Internet from GPO Access at http://www.access.gpo.gov/nara/index.html. Some laws may not yet be available.

H.R. 1162/P.L. 106–295

To designate the bridge on United States Route 231 that crosses the Ohio River between Maceo, Kentucky, and Rockport, Indiana, as the ''William H. Natcher Bridge''. (Oct. 13, 2000; 114 Stat. 1043)

H.R. 1605/P.L. 106–296

To designate the Federal building and United States courthouse located at 402 North Walnut Street in Harrison, Arkansas, as the ''J. Smith Henley Federal Building and United States Courthouse''. (Oct. 13, 2000; 114 Stat. 1044)

H.R. 1800/P.L. 106–297

Death in Custody Reporting Act of 2000 (Oct. 13, 2000; 114 Stat. 1045)

H.R. 2752/P.L. 106–298

Lincoln County Land Act of 2000 (Oct. 13, 2000; 114 Stat. 1046)

H.R. 2773/P.L. 106–299

Wekiva Wild and Scenic River Act of 2000 (Oct. 13, 2000; 114 Stat. 1050)

H.R. 4318/P.L. 106–300

Red River National Wildlife Refuge Act (Oct. 13, 2000; 114 Stat. 1055)

H.R. 4579/P.L. 106–301

Utah West Desert Land Exchange Act of 2000 (Oct. 13, 2000; 114 Stat. 1059)

H.R. 4583/P.L. 106–302

To extend the authorization for the Air Force Memorial Foundation to establish a memorial in the District of Columbia or its environs. (Oct. 13, 2000; 114 Stat. 1062)

H.R. 4642/P.L. 106–303

To make certain personnel flexibilities available with respect to the General

Accounting Office, and for other purposes. (Oct. 13, 2000; 114 Stat. 1063)

H.R. 4806/P.L. 106–304
To designate the Federal building located at 1710 Alabama Avenue in Jasper, Alabama, as the ''Carl Elliott Federal Building''. (Oct. 13, 2000; 114 Stat. 1071)

H.R. 5284/P.L. 106–305
To designate the United States customhouse located at 101 East Main Street in Norfolk, Virginia, as the ''Owen B. Pickett United States Customhouse''. (Oct. 13, 2000; 114 Stat. 1072)

H.J. Res. 111/P.L. 106–306
Making further continuing appropriations for the fiscal year 2001, and for other purposes. (Oct. 13, 2000; 114 Stat. 1073)

S. 366/P.L. 106–307
El Camino Real de Tierra Adentro National Historic Trail Act (Oct. 13, 2000; 114 Stat. 1074)

S. 1794/P.L. 106–308
To designate the Federal courthouse at 145 East Simpson Avenue in Jackson, Wyoming, as the ''Clifford P. Hansen Federal Courthouse''. (Oct. 13, 2000; 114 Stat. 1077)

Last List October 17, 2000

Public Laws Electronic Notification Service (PENS)

PENS is a free electronic mail notification service of newly enacted public laws. To subscribe, go to www.gsa.gov/archives/publaws-l.html or send E-mail to **listserv@www.gsa.gov** with the following text message:

SUBSCRIBE PUBLAWS-L
Your Name.

Note: This service is strictly for E-mail notification of new laws. The text of laws is not available through this service. **PENS** cannot respond to specific inquiries sent to this address.