Federal Register

Thursday,
January 18, 2001

Part VI

Department of Labor

Occupational Safety and Health Administration

29 CFR Part 1926

Safety Standards for Steel Erection; Final Rule

DEPARTMENT OF LABOR

Occupational Safety and Health Administration

29 CFR Part 1926

[Docket No. S–775]

RIN No. 1218–AA65

Safety Standards for Steel Erection

AGENCY: Occupational Safety and Health Administration (OSHA), U.S. Department of Labor.

ACTION: Final rule.

SUMMARY: By this notice the Occupational Safety and Health Administration (OSHA) revises the construction industry safety standards which regulate steel erection. The final rule enhances protections provided to workers engaged in steel erection and updates the general provisions that address steel erection. The final rule sets performance-oriented criteria, where possible, to protect employees from steel erection related hazards such as working under loads; hoisting, landing and placing decking; column stability; double connections; hoisting, landing and placing steel joists; and falls to lower levels. To effectuate this, the final rule contains requirements for hoisting and rigging, structural steel assembly, beam and column connections, joist erection, systems-engineered metal building erection, fall protection and training.

DATES: *Effective dates.* This standard will become effective on July 18, 2001.

ADDRESSES: In accordance with 28 U.S.C. 2112(a), the Agency designates the Associate Solicitor for Occupational Safety and Health, Office of the Solicitor of Labor, Room S–4004, U.S. Department of Labor, 200 Constitution Avenue, NW., Washington, DC 20210 to receive petitions for review of the final rule.

FOR FURTHER INFORMATION CONTACT: Ms. Bonnie Friedman, Director, Office of Public Affairs, Room N–3647, Occupational Safety and Health Administration, U.S. Department of Labor, 200 Constitution Avenue, N.W., Washington, DC 20210; telephone: (202) 693–1999. For additional copies of this **Federal Register** notice contact: OSHA, Office of Publications, U.S. Department of Labor, Room N–3101, 200 Constitution Avenue, NW., Washington, DC 20210; telephone: (202) 693–1888. Electronic copies of this **Federal Register** notice, as well as news releases, fact sheets, and other relevant documents, can be obtained from OSHA's web page on the Internet at http://www.OSHA.gov.

SUPPLEMENTARY INFORMATION:

I. Background

Congress amended the Contract Work Hours and Safety Standards Act (CWHSA) (40 U.S.C. 327 *et seq.*) in 1969 by adding a new Section 107 (40 U.S.C. 333) to provide employees in the construction industry with a safer work environment and to reduce the frequency and severity of construction accidents and injuries. The amendment, commonly known as the Construction Safety Act (CSA) [Pub. L. 91–54; August 9, 1969], significantly strengthened employee protection by providing for occupational safety and health standards for employees of the building trades and construction industry in Federal and Federally-financed or Federally-assisted construction projects. Accordingly, the Secretary of Labor issued Safety and Health Regulations for Construction in 29 CFR part 1518 (36 FR 7340, April 17, 1971) pursuant to Section 107 of the Contract Work Hours and Safety Standards Act.

The Occupational Safety and Health Act (the Act) (84 Stat. 1590; 29 U.S.C. 651 *et seq.*), was enacted by Congress in 1970 and authorized the Secretary of Labor to adopt established Federal standards issued under other statutes, including the CSA, as occupational safety and health standards. Accordingly, the Secretary of Labor adopted the construction standards which had been issued under the CSA, in accordance with Section 6(a) of the Act (36 FR 10466, May 29, 1971). The Safety and Health Regulations for Construction were redesignated as part 1926 of 29 CFR later in 1971 (36 FR 25232, December 30, 1971). Subpart R of part 1926, entitled ''Steel Erection,'' incorporating §§ 1926.750 through 1926.752, was adopted as an OSHA standard during this process. The requirements in the existing standard cover flooring, steel assembly, bolting, plumbing-up and related operations. In 1974 a revision in the temporary flooring requirement was made pursuant to a rulemaking conducted under section 6(b) of the Act (39 FR 24361).

Since that time, OSHA has received several requests for clarification of various provisions. The Agency began drafting a proposed rule to revise several provisions of its steel erection standard in 1984 and on several occasions discussed its intention with its Advisory Committee on Construction Safety and Health (ACCSH). The discussions with ACCSH led to the development of several draft notices requesting information or proposing changes to the rule. None of these draft notices was published, nor was public comment sought, except through the proceedings of the Advisory Committee.

In 1986, the Agency issued a Notice of Proposed Rulemaking for subpart M (Fall Protection) and announced that it intended the proposed rule to apply to all walking/working surfaces found in construction, alteration, repair (including painting and decorating), and demolition work, except for five specific areas. Although none of the specific areas pertained to steel erection, the Agency noted that ''Additional requirements to have fall protection for connectors and for workers on derrick and erection floors during steel erection would remain in subpart R—Steel Erection.''

This statement led to confusion. Many of the commenters to the subpart M rulemaking noted that they were not sure whether subpart M or subpart R would govern their activities. In one case, two sets of comments were provided, one to be used if subpart M applied and the other if subpart R applied. In the face of this uncertainty, the Agency decided that it would regulate the fall hazards associated with steel erection in its planned revision of subpart R.

OSHA announced its intention to regulate the hazards associated with steel erection, and in particular the fall hazards associated with steel erection, in a notice published in the **Federal Register** on January 26, 1988 (53 FR 2048). In that notice OSHA stated the following:

> The rulemaking record developed to date indicates that the Agency needs more information in order to develop a revised standard covering fall protection for employees engaged in steel erection activities. The comments received to date have convinced the Agency to develop a separate proposed rule which will provide comprehensive coverage for fall protection in steel erection. OSHA intends, therefore, that the consolidation and revision of fall protection provisions in subpart M do not apply to steel erection and that the current fall protection requirements of Part 1926 continue to cover steel erection until the steel erection rulemaking is completed. Accordingly, in order to maintain coverage under existing fall protection standards pending completion of the separate steel erection fall protection rulemaking, OSHA plans to redesignate existing §§ 1926.104, 1926.105, 1926.107(b), 1926.107(c), 1926.107(f), 1926.500 (with Appendix A), 1926.501, and 1926.502 into subpart R when the Agency issues the final rule for the subpart M rulemaking.

Since that time, the Agency drafted several documents which it presented to

ACCSH for comment. The Agency was also petitioned by affected parties to institute negotiated rulemaking. The first request for negotiated rulemaking was submitted to the Agency in 1990. At that time, it appeared the Agency would soon publish a Notice of Proposed Rulemaking (NPRM) in the **Federal Register** and, therefore, the request was denied. However, affected parties once again made their concerns known, and the Agency delayed publication of the NPRM while it made a further, more comprehensive study of the concerns raised.

OSHA retained an independent consultant to review the fall protection issues raised by the draft revisions to subpart R, to render an independent opinion on how to resolve the issues, and to recommend a course of action. In 1991, the consultant recommended that OSHA address the issue of fall protection as well as other potential revisions to subpart R by using the negotiated rulemaking process.

Based on this recommendation and continued requests for negotiated rulemaking by affected stakeholders, on December 29, 1992, OSHA published a **Federal Register** notice of intent to establish a negotiated rulemaking committee (57 FR 61860). The notice requested nominations for membership on the Committee and comments on the appropriateness of using negotiated rulemaking to develop a steel erection proposed rule. In addition, the notice described the negotiated rulemaking process and identified some key issues for negotiation.

In response to the notice of intent, OSHA received more than 225 submissions, including more than 60 nominations for membership on the Committee and several sets of comments. After an evaluation of the submissions, it was apparent that an overwhelming majority of commenters supported this action, and OSHA decided to go forward with the negotiated rulemaking process. The Agency selected the members of the Committee from among the nominations.

On May 11, 1994, OSHA announced that it had established the Steel Erection Negotiated Rulemaking Advisory Committee (SENRAC) (59 FR 24389) in accordance with the Federal Advisory Committee Act (FACA) (5 U.S.C. App. I), the Negotiated Rulemaking Act of 1990 (NRA) (5 U.S.C. 561 *et seq.*) and section 7(b) of the Occupational Safety and Health Act (OSH Act) (29 U.S.C. 656(b)) to make a recommendation to OSHA on the contents of a Notice of Proposed Rulemaking. Appointees to the Committee included representatives from labor, industry, public interests and government agencies. OSHA was a member of the committee, representing the Agency's interests.

The members of the Committee who participated in the 18 months of negotiations to develop the recommendation to OSHA are: Richard Adams—Army Corps of Engineers, replaced by Donald Pittinger and later replaced by Sam Testerman; William W. Brown—Ben Hur Construction Company; Bart Chadwick—Regional Administrator, Region VIII, Occupational Safety and Health Administration (since retired); James E. Cole—International Association of Bridge, Structural & Ornamental Ironworkers; Stephen D. Cooper—International Association of Bridge, Structural & Ornamental Ironworkers; Phillip H. Cordova—El Paso Crane & Rigging, Inc.; Perry A. Day—International Brotherhood of Boilermakers, Iron Ship Builders, Blacksmiths, Forgers & Helpers, later replaced by David Haggerty; James R. Hinson—J. Hinson Network, Inc.; Jim Lapping—Building and Construction Trades Department (AFL–CIO), replaced by Brad Sant, replaced by Sandy Tillett and later replaced by Phyllis Israel; John R. Molovich—United Steelworkers of America; Carol Murkland—Gilbane Building Company; John J. Murphy—Williams Enterprises of Georgia, Inc., replaced by Fred Codding—NAMOA; Steven L. Rank—Holton & Associates, Ltd.; Ray Rooth—CAL/OSHA; Alan Simmons—International Association of Bridge, Structural & Ornamental Ironworkers; William J. Smith—International Union of Operating Engineers; Ronald Stanevich—National Institute for Occupational Safety and Health (NIOSH) later replaced by Tim Pizatella, Division of Safety Research; C. Rockwell Turner—L.P.R. Construction Co.; and Eric Waterman—National Erectors Association.

SENRAC was chaired by Philip J. Harter, Esq., a nationally recognized expert in negotiated rulemaking and a trained facilitator.

SENRAC began negotiations in mid-June, 1994, and met 11 times as a full Committee. Committee workgroups developed detailed reports and recommendations which were presented at full committee meetings. At each meeting, the Committee debated the workgroups' reports, heard submissions from interested parties, and negotiated to find common ground on regulatory issues. In December 1995, the Committee developed a proposed revision of subpart R. OSHA then developed a preamble and Preliminary Economic Analysis based on the recommended regulatory text. The Agency presented this document to SENRAC for their review and approval. After Committee approval, on July 24, 1997, SENRAC presented OSHA with a consensus proposed standard at a signing ceremony held at the Department of Labor in Washington, DC.

On August 13, 1998, OSHA issued a notice of proposed rulemaking (NPRM) for subpart R—Steel Erection (63 FR 43452). The proposal set a time period, ending November 12, 1998, during which interested parties could submit written comments. In addition, the proposal provided a notice of a public hearing to begin on December 1, 1998. OSHA received 367 submissions, including testimony and documentary evidence, in response to the Notice of Proposed Rulemaking (NPRM). In addition, OSHA received 55 submissions, including requests to testify at the public hearing, in response to the notice of hearing contained in the NPRM.

The informal public hearing was held on December 1–11, 1998, with Administrative Law Judge John Vittone presiding. Judge Thomas Burke and Judge Richard Stansel-Gamm also presided at times during the nine days of hearings. At the close of the hearing, Judge Stansel-Gamm established a post-hearing comment period. The first part of the post hearing comment period, ending March 11, 1999, allowed participants to submit additional data and information. Participants were then permitted to submit briefs, arguments and summations until April 12, 1999. OSHA received 27 post-hearing submissions.

After analyzing the rulemaking record, the Agency developed draft final regulatory text. In accordance with the SENRAC's groundrules, OSHA convened a public meeting of SENRAC on December 16, 1999 (64 FR 66595) to consult with the Committee on the Agency's draft final rule. The purpose of the consultation meeting was to obtain comments and feedback from the Committee on OSHA's proposed revisions, prior to the issuance of a final standard. Among the topics discussed at the meeting were erection bridging, scope, fall protection, slippery surfaces, and joist holes. The discussions at the meeting aided OSHA in finalizing the draft steel erection standard.

On June 12, 2000, Judge Vittone certified the rulemaking record, including the hearing transcript and all written submissions to the docket, which closed the record for this proceeding.

A wide range of employers, businesses, labor unions, trade

associations, state governments, and other interested parties contributed to the development of this record. Many of these parties also participated in the negotiated rulemaking process. OSHA appreciates these efforts to help develop a rulemaking record that provides a sound basis for the promulgation of a final rule for subpart R—Steel Erection.

OSHA believes that the final subpart R will substantially reduce the significant risk of death and serious injury that has continued to confront workers engaged in steel erection. In addition, the clarified and revised language of the final rule and consolidation of relevant provisions will help employers and employees to understand the requirements of the steel erection standard. The final rule provides additional protection and closes gaps in the current rule's coverage of steel erection hazards. These improvements have been achieved through the SENRAC negotiations, and the record developed during the proposed rule comment period, public hearing and post-hearing comment period.

In this final rule, OSHA provides notice to all affected employers and employees of these revisions to subpart R, which the Agency believes are necessary to protect employees. OSHA believes the clarified language of the final rule will help employers to protect their employees more effectively through a standard that is easier to understand and comply with.

II. Pertinent Legal Authority

The purpose of the Occupational Safety and Health Act, 29 U.S.C. 651 *et seq.* (''the Act''), is ''to assure so far as possible every working man and woman in the Nation safe and healthful working conditions and to preserve our human resources.'' 29 U.S.C. 651(b). To achieve this goal, Congress authorized the Secretary of Labor to promulgate and enforce occupational safety and health standards, 655(b) (authorizing promulgation of standards pursuant to notice and comment), 654(b) (requiring employers to comply with OSHA standards)).

A safety or health standard is a standard ''which requires conditions, or the adoption or use of one or more practices, means, methods, operations, or processes, reasonably necessary or appropriate to provide safe or healthful employment'' (29 U.S.C. 652(8)).

A standard is reasonably necessary or appropriate within the meaning of Section 652(8) if it substantially reduces or eliminates significant risk, and is economically feasible, technologically feasible, and cost effective, and is consistent with prior Agency action or is a justified departure, is supported by substantial evidence, and is better able to effectuate the Act's purposes than any national consensus standard it supersedes.

A standard is technologically feasible if the protective measures it requires already exist, can be brought into existence with available technology, or can be created with technology that can reasonably be expected to be developed. *American Textile Mfrs. Institute* v. *OSHA,* 452 U.S. 490, 513 (1981) (''*ATMI*''); *AISI* v. *OSHA*, 939 F.2d 975, 980 (D.C. Cir. 1991) (''AISI'').

A standard is economically feasible if industry can absorb or pass on the costs of compliance without threatening its long-term profitability or competitive structure. See *ATMI,* 452 U.S. at 530 n. 55; *AISI*, 939 F.2d at 980. A standard is cost effective if the protective measures it requires are the least costly of the available alternatives that achieve the same level of protection. *ATMI*, 453 U.S. at 514 n. 32; *International Union, UAW* v. *OSHA*, 37 F.3d 665, 668 (D.C. Cir. 1994) (''*LOTO III*'').

Section 6(b)(7) authorizes OSHA to include among a standard's requirements labeling, monitoring, medical testing and other information gathering and transmittal provisions. 29 U.S.C. 655(b)(7).

All standards must be highly protective. See 58 FR at 16614–16615; *LOTO III*, 37 F.3d at 669. Finally, whenever practical, standards shall ''be expressed in terms of objective criteria and of the performance desired.'' *Id.*

As discussed in various places in this preamble, OSHA has determined that hazards associated with steel erection activities pose significant risks to employees and that the provisions of the final rule are reasonable and necessary to protect affected employees from those risks. The Agency estimates that full compliance with the existing and revised steel erection standard will reduce the risk of identified hazards (preventing 30 fatalities and 1,142 injuries annually). This constitutes a substantial reduction of significant risk of material harm for the exposed population of approximately 56,840 steel erection employees.

OSHA has determined that there are no technological obstacles to compliance with the final rule. As discussed in Section IV, Summary and Explanation of the Final Rule, the rulemaking record indicates that many of the requirements contained in the final rule are already in general use throughout the industry.

OSHA also concludes that compliance is economically feasible because, as documented in the Final Economic Analysis, all regulated sectors can readily absorb or pass on compliance costs and the standard's costs, benefits, and compliance requirements are consistent with those of other safety standards.

The record indicates clearly that steel erection employees face significant risks and that compliance with the final steel erection standard is reasonably necessary to protect affected employees from that risk. OSHA has considered and responded to all substantive comments regarding the proposed steel erection standard on their merits in Section IV, Summary and Explanation of the Final Rule. In particular, OSHA evaluated all suggested changes to the proposed rule in terms of their impact on worker safety, their feasibility, their cost effectiveness, and their congruity with the OSH Act.

III. Hazards Involved

Accidents during steel erection continue to cause injuries and fatalities at construction sites. Based on a review of compliance problems and public comments over the past several years, OSHA has determined that the current standard, which has been in place with little change for 30 years, needs a complete revision to provide greater protection and eliminate ambiguity and confusion. OSHA believes that reorganizing the standard's requirements into a more logical sequence will help employers to understand better how to protect their employees from the hazards associated with steel erection and will thus reduce the incidence of injuries and fatalities in this workforce.

OSHA tracks workplace fatalities through its Integrated Management Information System (IMIS) which captures a large percentage of the fatalities in the steel erection industry. However, detailed information on the conditions that give rise to steel erection accidents is less readily available. The best available data on steel erection hazards and accidents are derived from NIOSH and industry studies and from the Bureau of Labor Statistics (BLS).

During SENRAC negotiations, OSHA staff and a Committee statistical workgroup analyzed accident information derived from OSHA's IMIS system (Exs. 9–14A and 9–42). This data provided the best source of accident descriptions. However, it was frequently difficult to determine several critical elements, such as the precise activity being undertaken at the time of the accident; whether the victim was a trained ironworker; or the type of structure under construction or repair.

The following examples from OSHA's IMIS reports of accident investigations illustrate the types of accidents that occur in steel erection:

1. March 14, 1997: One fatality. Bundles of decking were being placed on bar joists that spanned approximately 40 feet. In the area where the decking was being landed, the joists had not been welded at both ends and ''x'' bracing had not been installed between the joists. Three bundles of decking had been landed near the ends of the joists. When two employees attempted to land a fourth bundle farther out on the unattached and unbraced joists, the joists moved and fell to the concrete slab below fatally injuring one employee. OSHA believes that compliance with the joist requirements of § 1926.757(e)(4) and (e)(5) of the final rule could have prevented this accident. Paragraph (e)(4) requires that no bundle of decking may be placed on steel joists until all bridging has been installed and anchored and all joist bearing ends are attached. In addition, paragraph (e)(5) requires that the edge of construction loads be placed within one foot of the bearing surface of the joist end.

2. October 1, 1997: One fatality. A worker was on a 24 foot steel I-beam attempting to connect to a 21 foot high steel column. The worker was on a ladder placed on the concrete slab. The column displaced from the foundation bolts during the connecting process, knocking the worker from the ladder and fatally injuring him. OSHA believes that compliance with the column anchorage requirements of § 1926.755(a) of the final rule could have prevented this accident by requiring that all columns be anchored by a minimum of four anchor rods (anchor bolts) and if applicable, paragraph (b) of that section requires that any repair, replacement or field modification of anchor rod (anchor bolt) be approved by the structural engineer of record.

3. October 1, 1997: One fatality. An employee was working at the 20 foot level re-positioning steel bar joists when three of the joists twisted and fell to the concrete slab below fatally injuring the employee. OSHA believes that compliance with the requirements of § 1926.757(b)(3), and possibly § 1926.757(a)(8), of the final rule could have prevented this accident. Paragraph (b)(3) requires that unless joists have been panelized, they shall be attached to the support structure, at least at one end, immediately upon placement in the final erection position and before additional joists are placed. In addition, if the joists are in bays of 40 feet or more, final rule paragraph (a)(8) requires that these joists be bolted to the structure to prevent such unintentional displacement of long limber joists.

4. January 27, 1998: One fatality. An employee fell 23 feet 6 inches while walking on a steel rafter. The employee finished bolting-up a steel purlin to the rafter and was in the process of walking back to get another purlin when he fell. OSHA believes that compliance with the fall protection requirements of the final rule could have prevented this accident. § 1926.760(a)(1) of the final rule requires that, with some exceptions, each employee engaged in steel erection be protected from falls when working on a surface more than 15 feet above a lower level. This includes workers engaged in bolt-up activities.

5. August 12, 1999: One fatality. A worker inadvertently picked up a marked, unsecured wooden cover over a 3′ × 3′ skylight hole. The worker accidently stepped into the hole and fell to the ground below. OSHA believes that compliance with the requirements of § 1926.754(e)(3) for covering roof and floor openings could have prevented this accident.

For its assessment of baseline risk in steel erection, OSHA used 1994–98 fatality data from the U.S. Bureau of Labor Statistics' (BLS) Census of Fatal Occupational Injuries. Based on analysis of the BLS data, OSHA estimates that structural metal workers experience an average of 35 fatalities per year. OSHA determined that, of the 35 fatalities, approximately 30 deaths per year are caused by factors that are addressed by the final standard (see the final economic analysis, Chapter III, summarized below in Section V). Furthermore, OSHA analysis of the results from the BLS Annual Survey of Occupational Injuries and Illnesses for the years 1994 to 1998 identifies an average of 2,279 lost-workday injuries per year whose circumstances would be addressed by provisions in the final standard. With an estimated workforce of 56,840 iron workers in construction ([BLS, Occupational Employment Statistics Survey, 1998]; see the final economic analysis), OSHA concludes that these baseline fatality and injury levels are high and clearly pose a significant risk to these workers that justifies Agency action.

In order to provide a more useful database for future rulemaking, OSHA has developed and implemented an enhanced coding system to be used by OSHA compliance officers when recording construction fatality investigations for entry into the Agency's IMIS. This system was implemented nationally on January 1, 1997. The data OSHA is now recording when making fatality investigations will provide a greater source of detailed information indicating how and where construction fatalities occur.

Three years after this final rule is implemented, OSHA will use the improved fatality data to evaluate the rule's effectiveness. Based upon this evaluation, a determination will be made as to whether modifications to the standard are necessary.

OSHA believes that this final rule will enhance employee protections by adding new requirements to close gaps in current coverage, strengthening many of the existing requirements, and promoting compliance by clarifying and consolidating current requirements. For further discussion of accident rates and significant risk, see Section V, Summary of the Final Economic Analysis.

Based on the available information referenced in OSHA's economic analysis and other record evidence, OSHA finds that structural metal workers are faced with a significant risk of serious injury or death that can be reduced substantially by the revisions contained in this final rule. The Agency estimates that each year approximately 56,840 workers in the United States suffer 2,279 serious (*i.e.,* lost-workday) steel erection injuries. In addition, an estimated 35 steel erection workers die every year as a result of hazardous workplace conditions that are preventable. OSHA estimates that, of the 35 annual steel erection fatalities, 8 fatalities will be averted by full compliance with the existing standard and that an additional 22 fatalities will be averted by compliance with the final standard. Additionally, of the 2,279 lost-workday steel erection injuries occurring annually, OSHA estimates that 1,142 injuries will be averted by full compliance with the existing and final standards (303 injuries will be averted by full compliance with the existing standard and 838 injuries will be averted by full compliance with the final standard; figures do not add to the total due to rounding). Therefore, OSHA finds it both necessary and appropriate to proceed with final rulemaking for steel erection activities.

IV. Summary and Explanation of the Final Rule

The following discussion explains how the final rule corresponds to or differs from the proposed steel erection standard and the existing standard, how SENRAC's negotiations and the comments and testimony presented on each provision influenced the drafting of the final rule and why we believe the provisions will protect steel erection

workers. Except where otherwise indicated, proposed provisions which did not elicit comment have been promulgated as proposed, for reasons stated in the preamble to the proposed rule which is incorporated by reference (63 FR 43457).

In addition to revisions to subpart R, Steel Erection, this rulemaking makes necessary revisions to Subpart M of this Part, Fall Protection, for purposes of consistency. Current § 1926.500(a)(2)(iii) states: ''Requirements relating to fall protection for employees performing steel erection work are provided in § 1926.105 and in subpart R of this part''. This final rule revises the language of § 1926.500(a)(2)(iii) to read: ''Fall protection requirements for employees performing steel erection work (except for towers and tanks) are provided in subpart R of this part''. This revision clarifies that steel erection is covered exclusively by subpart R. In addition, since tanks and towers are excluded from the scope of subpart R, this final rule adds paragraph § 1926.500(a)(2)(iv) to subpart M to clarify that fall protection requirements for tanks and communication and broadcast towers are covered by § 1926.105. This new provision states: ''Requirements relating to fall protection for employees engaged in the erection of tanks and communication and broadcast towers are provided in § 1926.105''. The final revision to subpart M is to revise § 1926.500(a)(3)(iv). Section 1926.500(a)(3)(iv) currently states that the fall protection systems and criteria contained in § 1926.502 do not apply to steel erection. Since the final steel erection standard refers to § 1926.502 for the criteria for its fall protection systems, it is necessary to revise this paragraph to exclude only tanks and communication and broadcast towers from § 1926.502. The criteria for tanks and communication and broadcast towers will continue to be covered by § 1926.104. Section 1926.500(a)(3)(iv) is revised read as follows: ''Section 1926.502 does not apply to the erection of tanks and communication and broadcast towers. (Note: Section 1926.104 sets the criteria for body belts, lanyards and lifelines used for fall protection during tank and communication and broadcast tower erection. Paragraphs (b), (c) and (f) of § 1926.107 provide definitions for the pertinent terms.)

Section 1926.750 Scope

Paragraphs (a) through (c) of § 1926.750 describe the scope of subpart R. In the proposed rule, the scope section was in two paragraphs, with the first designated ''Scope'' and the second designated ''Application.'' To avoid confusion, these sub-titles have been eliminated, and the entire section designated ''scope.''

Paragraph (a) provides that subpart R applies to employers engaged in steel erection activities involved in the construction, alteration and/or repair of any type of building or structure—single and multi-story buildings, bridges, and other structures—where steel erection occurs. The paragraph makes clear that differences in coverage under the previous standards between single and multi-story (or tiered) buildings, as well as buildings and other types of steel structures, are no longer relevant. All the provisions of revised subpart R now apply irrespective of such distinctions. Paragraph (a) also includes a ''Note,'' which sets out numerous examples of structures where steel erection may occur (this is not an exclusive list). This list was also in the proposed rule.

As indicated in the proposal, SENRAC discussed at length the differences between construction and maintenance since the construction industry performs millions of workerhours per year of ''industrial maintenance'' work. 29 CFR 1910.12(b) defines ''construction work'' as follows:

> Construction work means work for construction, alteration, and/or repair, including painting and decorating.

OSHA has interpreted this definition to include alteration, repair, renovation, rehabilitation and remodeling of existing facilities or structures.

The distinction between construction and maintenance is based on the nature of the work being performed rather than on the job title of the worker performing it. SENRAC acknowledged that the scope of proposed subpart R was governed by the definition of construction work contained in § 1910.12(b) which applies to all of part 1926.

The final rule defines steel erection (in § 1926.751) as ''the construction, alteration or repair of steel buildings, bridges and other structures, including the installation of metal decking and all planking used during the process of erection.'' In the proposed rule, steel erection was defined as ''the erection of'' these structures. That unintentionally conflicted with proposed paragraph (a), which stated that steel erection activities also included ''alteration and repair,'' activities which include work on structures that have already been erected. The definition of steel erection in the final rule was changed to correct this error.

One commenter stated that the phrase ''alteration and/or repair'' is unclear in that some of these activities may be considered construction work, while others may be considered maintenance. The commenter suggests that OSHA define these terms (Ex. 13–183).

All OSHA construction standards apply to ''alteration and/or repair.'' These terms play a significant role in determining the scope of all of these standards. With respect to subpart R, there was little discussion during the SENRAC negotiations of how to define these terms. The Agency has decided that it would be inappropriate to define them separately under these circumstances. Therefore, definitions for them have not been added in the final rule. OSHA's general interpretation of these terms will apply to the steel erection standard in the same way as for other construction standards.

The requirements of subpart R apply to employers engaged in steel erection unless otherwise specified. Subpart R does not apply to electrical transmission towers, communication and broadcast towers, or tanks.

Paragraph (b)(1) sets out a list of specific steel erection activities covered under subpart R. These steel erection activities include hoisting, laying out, placing, connecting, welding, burning, guying, bracing, bolting, plumbing and rigging structural steel, steel joists and metal buildings; installing metal deck and siding systems, miscellaneous metals, ornamental iron and similar materials; and moving point-to-point while performing these activities.

In the proposed rule, the erection of curtain walls and window walls, as well as ''laying out,'' ''placing,'' ''burning,'' ''guying,'' ''bracing'' and ''plumbing'' structural steel, steel joists and metal buildings were inadvertently omitted from this paragraph; this has been corrected in the final rule. Otherwise the paragraph is the same as proposed.

A definition of ''structural steel'' has also been added to help clarify this section. It means a steel member, or a member made of a substitute material (such as fiberglass, aluminum, composites, etc.). Structural steel includes, but is not limited to, steel joists, joist girders, purlins, columns, beams, trusses, splices, seats, metal decking, girts, and all bridging, and cold formed metal framing which is integrated with the structural steel framing of a building. At the hearing, SENRAC members (Ex. 205X; p. 258) explained that in some instances buildings are now constructed with members that are configured like structural steel members, but are made of a substitute material (for example,

solid web beams made of fiberglass). Since the erection process, the configuration of the structural framework and the members are the same as in a structure made of structural steel, these are included in the definition.

Cold formed metal framing is included in the definition of ''structural steel'' only when it is integrated with the structural steel framing of a building. An example of where it is *not* integrated with structural steel framing is in residential construction where such framing is referred to as ''metal studs'' and is installed by carpenters.

Paragraph (b)(2) lists a number of activities that are covered by subpart R when they occur during and are a part of the steel erection activities described in paragraph (b)(1). OSHA has changed the first sentence to explicitly state that coverage depends on whether an activity occurs *during* and is a part of steel erection. For example, there are standing seam metal roofing systems that incorporate a layer of insulation under the metal roof. In the installation process, a row of insulation is installed, which is then covered by a row of metal roofing. Once that row of roofing is attached, the process is repeated, row by row, until the roof is completed. The installation of the row of insulation is a part of the installation of the metal roofing (which is steel erection), and so the installation of the insulation is covered by subpart R.

A note to paragraph (b) of the proposed rule listed activities ''which could be considered covered by this subpart when they occur during the process of steel erection activities * * *'' Some commenters stated that the list as proposed was confusing and subject to misinterpretation, since it was difficult to determine when the activities would be covered by subpart R. One stated that the examples are much too broad and confusing, subject to misinterpretation, and that a literal interpretation would include the installation of handrails, gaskets, sealants, doors and windows within a building as steel erection whether or not it was actually a part of steel erection activities (Ex. 201X; p. 54). Others stated that the text of the scope paragraph was adequate and the note should be eliminated in order to avoid misinterpretation (Ex. 13–163); that the note is confusing because of its length, location and the implication that all listed activities, performed on listed structures, constitute steel erection; and that the note should be relocated to a non-mandatory appendix (Ex. 13–183). One commenter (Ex. 13–37) noted that many of the listed activities are equally likely to occur on structures with other types of structural frames (such as concrete, masonry or wood) which are covered by other subparts in 29 CFR 1926. Examples of activities that can be found on all buildings, regardless of frame type, are ''installing metal decks, siding systems, miscellaneous metals, ornamental iron and similar materials.'' In this commenter's view, the notes should be deleted, since it will be difficult for employers to have a clear understanding of which subpart directly applies to the different structural frames (Ex. 13–31). This commenter also expressed concerns with the overly broad scope of the proposed standard as described in § 1926.750 and the effect this would have on achieving a clear understanding of, and compliance with, the technical provisions of the standard. That commenter stated that it is not clear how subpart R and the other requirements in Part 1926 would apply to employers doing very similar work, based on the building's structure and whether steel erection is being done.

The changes to the first sentence of the list in the final rule are intended to address these concerns and give a clearer indication of when the listed activities are covered.

Several commenters asserted that the list of activities include some which were outside the scope of proposed § 1926.750(a). For example, paragraph (a) specifically excludes tanks, yet water containment structures, bins, and hoppers are listed as examples of structures where steel erection may occur. These commenters indicated that those examples should be omitted and that OSHA should include the following definition of tank: ''A container made out of material including metal, fiberglass, wood or concrete that can be any shape including: cylindrical, rectangular, conical, spherical, spheroidal or elliptical, and may be used, constructed, altered and/or repaired to process, hold, store or treat any substance in various states including under a vacuum, at atmospheric pressure or pressurized'' (Exs. 13–296, 13–207, 13–207D, 13–310, 13–317, and 13–316).

The Agency has added a definition of tank, but one that is simpler than the one suggested above. The definition of tank in the final rule is, ''a container for holding gases, liquids, or solids.'' Although tanks are excluded, as the Agency explained in the preamble to the proposed rule, subpart R does cover the steel structure that supports a tank (63 FR 43458). Also, water containment structures other than tanks, bins and hoppers do not meet the definition of tank, so these examples are included in the associated list of examples as proposed by SENRAC.

Others wanted to expand the list. One commenter (Ex. 205X; p. 233) stated that ''structural precast'' should be included in the list of examples because steel erectors erect many segments of a structure, including columns, beams, as well as architectural materials mounted on steel frames. Another commenter (Ex. 205X; pp. 239–265) stated that ''structural precast'' should be included because the associated hazards during erection and hoisting, etc. of structural shapes made out of something other than steel are identical to those associated with steel.

A commenter (Ex. 13–129) requested that ''architectural precast concrete'' be removed from the list. His reasons included: (1) activities associated with architectural precast concrete are regulated under subpart M; and (2) an erector would not consider the erection of a precast concrete panel as steel erection—-the process is simpler, safer, and faster than steel erection.

When OSHA established SENRAC, it stated that the scope of subpart R to be addressed by the Committee was limited to steel erection and did not include the erection of precast concrete (59 FR 25848). Furthermore, in an October 18, 1994 letter to the General President of the United Brotherhood of Carpenters and Joiners of America, OSHA reiterated the decision that subpart R would not cover precast concrete.

The final rule does not cover the erection of precast concrete. The final list of conditionally covered activities does not include erection of precast concrete. In the proposed rule, the ''Note'' that listed activities that could be covered by subpart R included ''architectural precast concrete''. Because OSHA clearly stated to the public that precast erection would not be covered by subpart R, we have removed ''architectural precast concrete'' from the listed activities in § 1926.750(b)(2) of the final rule. In addition, because precast concrete is sometimes mounted on steel frames, ''stone and other architectural materials mounted on steel frames'' has been changed to ''stone and other non-precast concrete architectural materials mounted on steel frames.''

Paragraph (c) provides that the duties of controlling contractors under this rule include, but are not limited to, the duties specified in § 1926.752(a) (approval to begin steel erection), § 1926.752(c) (site layout), § 1926.755(b)(2) (notification of repair, replacement or modification of anchor bolts), § 1926.759(b) (protection from

falling objects) and § 1926.760(a)(2)(i) (perimeter safety cables).

The reference to the controlling employer provisions and the notation that this is not an exclusive list of responsibilities were added to the final rule to be consistent with OSHA's multi-employer policy. In the proposal, in setting out particular duties of controlling employers, it was not OSHA's intent to eliminate their responsibilities under the multi-employer doctrine. Therefore, the final rule specifically states that the controlling contractors' duties are not limited to those specified in the rule.

Numerous commenters, most of which were general contractors, objected to imposing any obligations on controlling contractors who were not performing the steel erection work themselves. In their view, requiring employers to take actions to protect the employees of other employers is inappropriate and not permitted under the OSH Act. For example, Massman Construction Company (Ex. 13–16); Robinson Quality Constructors (Ex. 13–36); Hayner Hoyt Corporation (Ex. 13–223); St. Louis Bridge Company (Ex. 13–244); J. F. O'Healy Construction Corporation (Ex. 13–358), and other commenters wrote:

> We also adamantly oppose the process of SENRAC taking upon themselves to expand the scope of the OSHA Act of 1970 by introducing a definition of controlling contractor that expands the scope of OSHA. If controlling contractor language as presently written is permitted in Subpart R, it is our belief that the precedent set by such an action will lead to this same controlling contractor language being introduced into future revisions to other OSHA standards such as scaffolding, stairways and ladders, fall protection, and excavation.

Another series of comments OSHA received also opposed the controlling contractor provisions. The comments written by RK Building Systems (Ex. 13–168); Fleischer-Seeger Construction Corporation (Ex. 13–169); Massman Construction Co. (Ex. 170A); WM. R. Montgomery and Associates, Inc. (Ex. 13–170C); Robinson Quality Constructors (Ex. 13–170D); J.F. O'Healy Construction Corporation (Ex. 13–327); and many other commenters stated:

> We are adamantly opposed to the introduction of controlling contractor in the proposed standard revisions. If the proposed standard becomes law, the general contractor or construction manager will become responsible for many of the activities of the steel erector subcontractors. This will be in spite of the fact that the general contractor or construction manager subcontracts with the steel erector because that particular subcontractor has expertise in performing steel erection work. The subcontractor should be allowed to perform its work without OSHA mandated intervention between the general contractor or construction manager and the subcontractor.

OSHA recognizes that steel erection subcontractors are hired for their expertise in performing steel erection work. In that respect, steel erection subcontractors are similar to other subcontractors, all of whom are hired because they are experts in their specialties. But while each subcontractor has special expertise, it is typically the general contractor or construction manager who controls the overall project and coordinates the work of the subcontractors. The general contractor's or construction manager's control over the project gives it the ability to see that safety and health hazards created by subcontractors are corrected. Accordingly, when the general contractor or construction manager has reason to know of violative conditions created by a subcontractor, has the authority to prevent or correct that condition by reason of its supervisory authority over the worksite, and fails to take appropriate action to prevent or correct the violation, the general contractor or construction manager is liable for the violation as a controlling employer. See OSHA Directive No. CPL 2–00.124 (Dec. 10, 1999). OSHA stresses that the general contractor or construction manager is not strictly liable for subcontractor violations but is only responsible if it fails to take reasonable and feasible steps to discover and correct unsafe or unhealthful working conditions on the work site. *Id.*

OSHA's policy of holding controlling employers liable for violations they can prevent or correct by reason of their supervisory capacity has been upheld by a number of courts and the Review Commission. See, for example, *Universal Construction Company*, Inc. v. *OSHRC*, 182 F.3d 726 (10th Cir., 1999); *R.P. Carbone Constr. Co.* v. *Occupational Safety and Health Review Comm'n*, 166 F.3d 815 (6th Cir., 1998); *Grossman Steel & Aluminum Corp.*, 4 BNA OSHC 1185 (Rev. Commission, 1975); *Marshall* v. *Knutson Construction Co.*, 566 F. 2d 596 (8th Cir., 1977); *Centex-Rooney Construction Co.*, 16 BNA OSHC 2127 (Rev. Commission 1994).

OSHA has, by regulation, placed specific obligations on controlling employers for the protection of other employers' employees in a number of standards. See, for example, § 1910.1200(e)(2), Hazard Communication; § 1910.146, Permit-Required Confined Spaces; and § 1926.1101(d), Asbestos. Therefore, the assertion that the Agency does not have the authority to place such obligations on controlling contractors in subpart R is unpersuasive.

SENRAC found that many controlling contractors have already accepted responsibility for the five specific duties now codified in the final rule. This was corroborated in testimony by several general contractors/construction managers at the rulemaking hearing. (See, for example, Ex. 201X, pp. 35–38; Ex. 201X, p. 63; Ex. 201X, pp. 93–95 and 105–107; Ex. 201X, pp.150–151; and Ex. 201X, p.211.) Specifically, the following is Mr. Jenkins' response (Ex. 201X, pp. 35–38) when questioned during testimony at the public hearing:

> QUESTION: In fact, most of the [controlling contractor] requirements that have been mentioned through cross examination you seem to be doing already.
>
> MR. JENKINS: That's correct, because we try to run safe job sites. (Id.)

Furthermore, controlling contractors were represented on SENRAC by William Brown representing the Associated General Contractors of America (AGC), Rockwell Turner representing the Associated Builders and Contractors (ABC), and Carol Murkland representing Gilbane Building Company. They endorsed the proposed rule, which contained these same provisions. Accordingly, it is both necessary and appropriate to place these obligations on controlling contractors.

Section 1926.751 Definitions

The final rule definition section lists and defines major terms used in the standard. Approximately twenty of the proposed definitions, all developed by SENRAC with input from the Steel Joist Institute (SJI), the Steel Deck Institute (SDI) and others, received no comments nor were they discussed in testimony at the hearing. Accordingly, these definitions are promulgated as proposed and are not discussed in the final rule.

In the proposal, OSHA defined the terms ''clipped connection'', ''cold formed joist'', and ''composite joists''. Because these terms are not used in the final rule, OSHA has removed the definitions for these terms. The term ''clipped connection'' is considered an ''equivalent connection device'' under § 1926.756(c)(1) and has been moved to Appendix H.

The remaining proposed definitions did receive considerable attention during this rulemaking. Accordingly, the following discussion addresses these definitions in more detail.

''Column.'' This term is defined in the final rule to mean a load-carrying vertical member that is part of the primary skeletal framing system.

Columns do not include ''posts'' such as wind posts, and posts supporting stair landings, wall framing, mezzanines and other substructures (see definition of ''post''). As discussed later in this preamble (see discussion of final § 1926.755), the Agency determined that a definition for column is needed to clarify which members are subject to the requirements of the column anchorage provisions in § 1926.755.

''Competent person.'' This term is already defined in § 1926.32(f), which applies to all construction work. A ''competent person'' is a person who is capable of identifying existing and predictable hazards in the surroundings or working conditions which are unsanitary, hazardous, or dangerous to employees, and who has authorization to take prompt corrective measures to eliminate them. Because the term appears so frequently in this standard, OSHA is repeating this definition in subpart R. One commenter (Ex, 13–153) suggested adding ''typically, but not necessarily, the competent person on a steel erection project will be the person responsible for the steel erection.'' OSHA does not believe the recommended language clarifies the definition. Also, the term is used in all construction applications and the Agency does not feel it is appropriate to change the definition for steel erection.

''Connector'' means an employee who, working with hoisting equipment, is placing and connecting structural members and/or components. This definition is unchanged from the proposal. Several commenters (Exs. 13–365, 13–334; 13–193A; 13–173; and 13–215) stated that this definition does not clearly indicate what activities are performed by a connector. They specifically argued that the definition does not indicate whether spreading and securing of bar joists would be considered connecting. One witness testified (Ex. 201X; p. 81) that the proposed definition was so broad that it would include almost any operation performed by ironworkers. OSHA disagrees with these commenters. SENRAC intended to make this definition as narrow as possible, and the Agency believes that the final definition carries out this intention. The definition is very specific; connecting is distinguished from other steel erection activities by the elements in the definition. For example, spreading and securing bar joists by hand would not be considered connecting, since that work is not done ''with hoisting equipment.'' Therefore, an employee is a ''connector'' only when working with ''hoisting equipment''. This includes placing components as they are received from hoisting equipment, and then connecting those components while hoisting equipment is overhead.

''Constructibility.'' This term is defined to mean the ability to erect structural steel members in accordance with subpart R without having to alter the over-all structural design. As discussed in the preamble of final rule § 1926.755, the Agency has determined that a definition for constructability is needed for clarification. In the proposal, several provisions contained exceptions where ''design and constructibility do not allow'' compliance. However, the term ''design and constructibility'' was not defined. The term was included in the proposal to allow exemptions from specific requirements where the overall design of the structure prevents compliance with such requirements. In other words, in order to comply with the requirements, the overall design of the structure would have to be altered. Since ''constructibility'' includes ''design'' constraints, the Agency has replaced ''structural design and constructability'' with ''constructibility.'' This term is used in several places in the final rule, specifically § 1926.754(e)(2)(i), § 1926.756(e)(1) and (e)(2), and § 1926.757(a)(8)(ii).

''Controlled Decking Zone (CDZ).'' This term is defined to mean an area in which certain work (for example, initial installation and placement of metal deck) may take place without the use of guardrail systems, personal fall arrest systems, restraint systems or safety net systems provided that alternative procedures (for example, controlled access combined with worker training, specified work practices and use of control lines or equivalent) are implemented. Controlled decking zones are discussed in final rule § 1926.760(c).

''Controlling contractor.'' OSHA defines this term to mean a prime contractor, general contractor, construction manager, owner acting as the general contractor, or any other legal entity that has overall responsibility for the construction of the project—its planning, quality, and completion.

One witness (Ex. 201X; p. 8–39) suggested that a company would be considered a controlling contractor under this definition if it controls the schedule at the worksite, dictates when other contractors will do their work, makes it a practice to inform other contractors on the site of safety problems and requires the other contractors to take corrective action. He further argued that, while these are not all of the relevant factors, they are typical of the types of authority that controlling contractors have.

Some commenters stated that the definition of a controlling contractor was vague and could be interpreted to include a ''private or public owner, the project architect, general contractor or other contractors on a multiple prime contractor project[s].'' The provision defines the term with respect to the extent of control of the worksite. A controlling contractor is an entity that has general supervisory authority over the worksite such that it can correct safety and health violations itself or have others correct them. So, an owner, project architect or any other entity that has this authority would be considered a controlling contractor.

The proposed phrase ''by contract with other parties'' has been omitted in the final rule because an employer may have the ''overall responsibility for the project, its planning, quality and completion'' without it provided for by contract.

''Critical lift'' means a lift that (1) exceeds 75% of the rated capacity of the crane or derrick, or (2) requires the use of more than one crane or derrick. A commenter (Ex. 13–210) stated that critical lifts are not unique to steel erection and should be addressed in OSHA's crane standard, 29 CFR 1926.550. While OSHA agrees that these types of lifts occur in industries other than steel erection, there currently are no special requirements in OSHA's crane standard that specifically address these types of lifts. Since cranes are the primary equipment used in steel erection to lift/hoist steel members, the Agency feels it is important to address critical lifts in the steel erection standard. As stated in the proposal, this definition was developed by a SENRAC workgroup.

''Decking hole.'' This term is defined to mean a gap or void more than 2 inches (5.1 cm) in its least dimension and less than 12 inches (30.5 cm) in its greatest dimension in a floor, roof or other walking/working surface whereas ''opening'' means a gap or a void large enough to present a fall hazard. Pre-engineered holes in cellular decking are not included in the definition of ''decking hole''.

SENRAC believed that it was important to distinguish between holes that are too small to fall through (but are a tripping and falling object hazard), and holes which are large enough to fall through. This allowed the proposed rule to have safety requirements tailored to whether the hole presents a tripping/falling object hazard or a fall hazard. It therefore used the terms ''decking hole'' for small holes and ''opening'' for large holes.

Two commenters stated that the definitions of hole and opening should be consistent with the definitions in the general fall protection standard for construction, 29 CFR subpart M, § 1926.500(b) (Ex. 13–210 and 13–222). They pointed out that the definition of ''opening'' in the proposal is different from the definition for that term in § 1925.500(b). Another commenter (Ex. 13–1) noted that the proposal's definitions of holes and openings are consistent with the definitions in ANSI A1264.1–1995, although the ANSI standard does not apply to construction.

The definition of ''decking hole'' in subpart R, which has both a minimum and maximum measurement—2 inches in its least dimension and 12 inches in its greatest dimension—refers to small holes. In contrast, the definition of ''hole'' in subpart M (§ 1926.500(b)) includes large as well as small holes; it has only a minimum measurement—2 inches or more in its least dimension. Additionally, in subpart R, the term ''opening'' refers to holes large enough to be a fall hazard. In subpart M, the term ''opening'' refers to gaps or voids large enough to be a fall hazard, but only in walls (or partitions).

The definition of ''decking hole'' and ''opening'' in the proposal were developed by SENRAC specifically for the steel erection industry for this purpose. While the terms are inconsistent with comparable terms in subpart M, the Committee found that the proposal's definitions reflect the steel erection industry's use of these terms. While consistency between standards is desirable, the subpart M terms would not meet the needs of this standard. Therefore, the Agency has retained the subpart R terms from the proposal.

''Derrick floor.'' This term is defined to mean the elevated floor of a building or structure that has been designated to receive hoisted pieces of steel prior to their final placement. A commenter (Ex. 13–308) suggested changing the term to ''staging floor'' since it is not clear if the references in § 1926.754(e)(5)(i) and (e)(5)(ii) are intended to refer to floors used to support crane derricks or staged materials. SENRAC has noted that the term ''derrick floor'' is a term commonly used in the steel erection industry to refer to the floor on which the erection process for the floors above is taking place. The derrick floor may or may not have a derrick on it but it is considered the erection floor and serves as a staging area for construction loads that are necessary to perform the work at the levels above. Since the term is a generally understood term within the industry, the Agency feels that the term ''staging area'' is too limiting and may lead to confusion over the intended use of the floor. The Agency concurs with SENRAC's recommended term and is promulgating the final definition as proposed.

''Double connection seat'' means a structural attachment that, during the installation of a double connection, supports the first member while the second member is connected. This definition replaces the proposed definition of ''seat''. The definition was modified to be consistent with the revisions made to final § 1926.756(c). ''Seat'' was changed to ''double connection seat'' to clarify that these devices are used in double connections.

''Erection Bridging'' means the bolted diagonal bridging that is required to be installed prior to releasing the hoisting cables from the steel. One commenter stated that the term should be replaced with ''bridging'' (Ex. 13–308). He asserts that ''erection bridging'' incorrectly implies that the bridging is temporary and required for erection proposes only, similar to erection bracing, erection bolts, etc. However, the Agency disagrees. Erection bridging refers to bridging that must be installed during the erection process, and becomes a permanent part of the structure. This term was recommended by SJI, and accepted, as a term that is commonly understood by the industry. Therefore, the term is unchanged in the final rule.

''Fall restraint system.'' The final rule defines a fall restraint system as a fall protection system that prevents the user from falling any distance. The system is comprised of either a body belt or body harness along with an anchorage, connectors and other equipment necessary for the system to prevent the worker from falling any distance. The other components typically include a lanyard, and may also include a lifeline and other devices. When used while working on a horizontal surface, the system prevents the worker from stepping past the edge of the walking/working surface (in contrast, a fall arrest system limits the distance of a fall).

In the proposed rule, the Agency used the term ''fall restraint (positioning device).'' In the final rule, OSHA has deleted the parenthetical reference to a positioning device, modified the definition, and added a separate definition for the term ''positioning device.'' The term used in the proposal was defined as a system used to prevent an employee from falling more than two feet, consisting of an anchorage, connectors, a body belt or full body harness and a lanyard, lifeline or suitable combination of these, and permitting self-rescue. The reasons for changing the term and its definition are discussed in the discussion of final rule § 1926.760.

''Final interior perimeter.'' This is a new term in the final rule and means the perimeter of a large permanent open space within a building such as an atrium or courtyard. This does not include openings for stairways, elevator shafts, etc. The term, used in § 1926.760(a)(2), describes those areas that are considered a final perimeter of the structure but are not exterior perimeters.

''Hoisting equipment.'' This term is defined to mean commercially manufactured lifting equipment designed to lift and position a load of known weight to a location at some known elevation and horizontal distance from the equipment's center of rotation. ''Hoisting equipment'' includes but is not limited to cranes, derricks, tower cranes, barge-mounted derricks or cranes, gin poles and gantry hoist systems. The definition for hoisting equipment includes all commercially manufactured equipment that is used in steel erection to lift loads to a specified location. The intent was to ensure that this term is not strictly limited to cranes. The definition was also crafted to prevent a steel erector from claiming as ''connectors'' employees who are not true connectors (such as detailers) by providing them with a ''come-a-long'' to meet the definition of connector. A ''come-a-long'' is *not* included in the definition of hoisting equipment. A ''come-a-long'' is a mechanical device, usually consisting of a chain or cable attached at each end, that is used to facilitate movement of materials through manual force and leverage. It has been excluded from the definition of ''hoisting equipment'' because it is manually powered. A commenter (13–308) suggested deleting ''an erection'' from the proposed definition since it is not necessary in the context of the definition. OSHA agrees with the commenter that the phrase is not necessary. In addition, this commenter suggested that ''come-a-longs'' should be considered hoisting equipment when they are used for overhead loads. The Agency does not agree with the commenter on this point. A ''come-a-long'' is used to adjust the position of a member, not to ''hoist'' it from one level to another. Hoisting equipment has purposely been defined to only include the traditional equipment used for hoisting steel members into place. A ''come-a-long'' does not fit into this definition. OSHA has also made editorial changes to the definition to make it clearer.

''Opening.'' This term is defined to mean a gap or void 12 inches (30.5 cm) or more in its least dimension in a floor, roof or other walking/working surface. For the purposes of this subpart, skylights and smoke domes that do not meet the strength requirements of § 1926.754(e)(3) are regarded as openings (see the discussion on ''decking hole'' for a more detailed explanation).

''Personal fall arrest system.'' The final rule defines a personal fall arrest system (PFAS) as a system used to arrest an employee in a fall from a working level. It consists of an anchorage, connectors and body harness, and may also include a lanyard, deceleration device, lifeline or suitable combinations of these. The final rule's definition deletes the proposed reference in the proposal to body belts, since these are no longer permitted to be used in fall arrest systems.

''Positioning device system.'' As discussed above under the definition of ''fall restraint system,'' the final rule distinguishes the terms fall restraint system and positioning device system. Consequently, a separate definition for positioning device system has been added. It defines this term as a body belt or body harness rigged to allow an employee to be supported on an elevated, vertical surface, such as a wall or column, and work with both hands free while leaning.

This definition omits the reference in the proposal's definition of ''fall restraint (positioning device)'' to the ability to self-rescue. That capability is assured by the fact that the final rule, in paragraph § 1926.760(d)(1), requires positioning device systems to comply with the requirements of § 1926.502. Section 1926.502(e) requires positioning device systems to limit the worker's fall to no more than two feet, which allows workers using these devices to rescue themselves in the event of an arrested fall. When using ''fall restraint'' and ''positioning device systems,'' employers do not need to provide employees with self rescue devices. The reason such devices are not required is that ''fall restraint'' and ''positioning device systems'' must be designed to prevent employees from being exposed to fall hazards.

''Post.'' This term is defined to mean a structural member with a longitudinal axis that is essentially vertical, that: (1) Weighs 300 pounds or less and is axially loaded (a load presses down on the top end), or (2) is not axially loaded, but is laterally restrained by the above member. Posts typically support stair landings, wall framing, mezzanines and other substructures. As discussed in the summary and explanation of final rule § 1926.755, the Agency feels that a definition for post is needed to clarify the application of § 1926.755. (See also the definition of ''Column'' in § 1926.751.)

''Project structural engineer of record.'' This term is defined in the final rule to mean the registered, licensed professional responsible for the design of structural steel framing and whose seal appears on the structural contract documents. One commenter (Ex. 13–356) suggested expanding the definition by adding ''and other structural systems'' after structural steel framing. The necessity for such an addition has not been demonstrated; the definition is promulgated unchanged.

''Qualified person.'' This term is also defined in § 1926.32(m), which applies to all construction work covered by part 1926. A ''qualified person'' means one who, by possession of a recognized degree, certificate, or professional standing, or who by extensive knowledge, training, and experience, has successfully demonstrated the ability to solve or resolve problems relating to the subject matter, the work, or the project. As with the definition of ''competent person'', because of the frequent use of the term in this standard, and as a matter of convenience for users, the definition is repeated in subpart R even though the definition already exists in § 1926.32. One commenter (Ex. 13–153) suggested changing the definition to be more specific to steel erection. However, the record does not show a significant need to have a different definition.

''Steel Erection.'' This term means the construction, alteration or repair of steel buildings, bridges and other structures, including the installation of metal decking and all planking used during the process of erection. This is a revision of the definition in the proposal, which defined steel erection as ''the erection of steel buildings, bridges and other structures, including the installation of steel flooring and roofing members and all planking and decking used during the process of erection.'' One commenter indicated that steel erection is understood to include alteration and/or repair activities, but that the definition in the proposal was limited to the erection of entire structures (Ex. 13–183).

The definition in the proposal unintentionally conflicted with the proposed § 1926.750(a), which stated that steel erection activities also included ''alteration and repair,'' activities which include work on structures that have already been erected. The definition of steel erection in the final rule has been changed to correct this error.

''Steel joist.'' This term is defined to mean an open web, secondary load-carrying member of 144 feet (43.9 m) or less, designed by the manufacturer, used for the support of floors and roofs. This term does not include structural steel trusses or cold-formed joists. A commenter (Ex. 13–153) suggested adding ''designed by the manufacturer'' to this definition to make it consistent with that of steel joist girder and differentiate it from a steel truss which is designed by the structural engineer of record. OSHA agrees with this suggestion and has changed the definition in the final rule accordingly.

''Structural steel'' means a steel member, or a member made of a substitute material (such as, but not limited to, fiberglass, aluminum or composite members). These members include, but are not limited to: steel joists, joist girders, purlins, columns, beams, trusses, splices, seats, metal decking, girts, and all bridging, and cold formed metal framing which is integrated with the structural steel framing of a building. This definition was added because it is an important term that is used in the scope section of this standard. Also, at the hearing and the December 16, 1999 SENRAC consultation meeting, SENRAC members explained (Ex. 205X, pp. 230–233, 248–249, and 257–271; Ex. 206X, p. 70; and Ex. 208X, pp. 144–145) that in some instances buildings are now constructed with members that are configured like structural steel members, but are made of a substitute material (for example, solid web beams made of fiberglass). Since the erection process, configuration of the structural framework and the members are the same as in a structure made of structural steel, these are included in the definition as well.

''Systems-engineered metal building.'' This term replaces the term ''pre-engineered metal buildings'' that was used in the proposed rule. The final rule definition of systems-engineered metal building is essentially the same as the proposed definition of pre-engineered metal building. It means a field-assembled building system consisting of framing, roof and wall coverings. Typically, many of these components are cold-formed shapes. These individual parts are fabricated in one or more manufacturing facilities and shipped to the job site for assembly into the final structure. The engineering design of the system is normally the responsibility of the systems-engineered metal building manufacturer. The definition was developed by a SENRAC

workgroup. Although no comments were received on the definition, the term itself was changed for reasons explained in the discussion of § 1926.758.

''Tank'' is a new definition. It means a container for holding gases, liquids or solids. Although, as explained in the discussion of § 1926.750(a), subpart R does not cover tanks, it covers the erection of steel structures supporting tanks.

Section 1926.752 Site Layout, Site-Specific Erection Plan and Construction Sequence

This section of the final rule sets forth OSHA's requirements for proper communication between the controlling contractor and the steel erector prior to the beginning of the steel erection operation and proper pre-planning by the steel erector to minimize overhead exposure during hoisting operations. Appendix A, which is referred to in this section, also provides guidelines for employers who elect to develop a site-specific erection plan. OSHA's current standard does not contain provisions similar to those being adopted in this section.

SENRAC recognized that under current practices in the industry, erection decisions are often made in the field when the steel arrives. SENRAC believes that pre-planning and coordination are currently not occurring to the extent they should be (63 FR 43461).

Paragraph (a) Approval To Begin Steel Erection and (b) Commencement of Steel Erection

Paragraph (a) requires that the controlling contractor ensure that written notifications be provided to the steel erector that (1) The concrete in the footings, piers, and walls and the mortar in the masonry piers and walls have cured to a level that will provide the proper strength to support any forces imposed on the concrete during steel erection; and (2) that any repairs, replacements, and modifications made to anchor bolts meet the requirements of § 1926.755(b). The criteria for adequate strength for concrete footings depend on the results of required American Society for Testing and Materials (ASTM) standard test methods. (Note: requirements for the controlling contractor to notify the steel erector of any repair, replacement or modification to anchor bolts are found in § 1926.755(b))

SENRAC found that many accidents involving collapse could have been averted had adequate pre-erection communication and planning occurred (63 FR 43461). This section of the rule is designed to ensure proper communication and pre-planning between contractors pouring concrete footings, contractors making repairs to repairing anchor bolts, the controlling contractor, and the steel erector. This communication must take place prior to the beginning of steel erection. The written notification can be transmitted electronically.

Some commenters (Exs. 13–4, 13–7, 13–26, 13–63A and 13–193A) stated that a controlling contractor would not know if concrete had cured to the point that steel erection could begin. They go on to state that steel erectors know more about how much concrete needs to cure, and that they should be the ones to determine if the proper information has been provided so that steel erection can start.

OSHA agrees that both the controlling contractor and steel erector usually would not know if concrete has cured unless the ASTM standard test method has been performed. This requirement is similar to the OSHA requirement for concrete construction found in § 1926.703(e)(ii), which requires that formwork not be removed from cast-in-place concrete ''* * * until the concrete has been properly tested with an appropriate ASTM standard test method designed to indicate the concrete compressive strength, and the test results indicate that the concrete has gained sufficient strength to support its weight and superimposed loads.'' Since the footings, piers and walls intended to be covered by this proposed section will be supporting the steel structure being erected, OSHA, as well as the Committee, wishes to ensure that this information is provided to the steel erector before the steel is placed on the concrete.

In the proposed rule, the controlling contractor would have had to provide the ASTM test results to the steel erector. The final rule has been changed to reflect that the controlling contractor must ensure that the test results are provided to the steel erector. This rephrasing will allow the controlling contractor to have a contractor familiar with the ASTM test methods perform the test and provide the results to the steel erector.

Commenters also stated (Exs. 13–164, 13–264, 13–334 and 13–359) that the steel erection contractor, not the controlling contractor, was the best person to evaluate site conditions and approve the commencement of steel erection. The final rule, however, does not contain a broad-based requirement that the controlling contractor evaluate whether the site is in proper condition to begin steel erection. Rather, it sets out two specific aspects of the site that the controlling contractor must evaluate before approving the commencement of steel erection. The controlling contractor is in a better position to gather the required information than the steel erector, since much of this information must be obtained from persons over whom the steel erector has no control, such as the laboratory testing the concrete samples or the concrete contractor repairing the damaged anchor bolts. OSHA has also added a new provision, § 1926.752(b), to ensure that a steel erector does not begin erecting steel before receiving the information required in § 1926.752(a).

A commenter (Ex. 13–149) suggested that the word ''must'' in the proposed § 1926.752(a) be replaced with the word ''shall.'' Although these words have the same meaning, the word ''shall'' is used throughout this standard, and the change was made in the interest of consistency.

Paragraph (c) Site Layout

Paragraph (c)(1) and (c)(2) of the final rule requires that the access roads and a drained and graded area be provided and maintained by the controlling contractor. These conditions enable the steel erector to move around the site and perform necessary operations in a safe manner. The provision does not apply to roads outside of the construction site.

Some commenters (Exs. 13–26, 13–63A, 13–193A, 13–215 and 13–241) pointed out that safe access roads are already required in § 1926.20 (General Safety and Health Provision); § 1926.550 (Cranes and Derricks); and § 1926.602(a)(3)(i) (Material Handling Equipment standards). However, these standards do not protect employees from the hazards addressed in § 1926.752(b). For example, these standards do not address adequate access roads into and through the site. As noted earlier, OSHA has attempted to bring together the provisions that are unique to steel erection work in subpart R.

Testifying as to the need for this provision in the steel erection industry, Steve Rank, a member of SENRAC who represented the insurance interest, stated the following:

> I am talking about the site conditions. Normally, you don't talk about fatalities when you talk about site conditions, but the statistics that OSHA never got were those disabling injuries where ironworkers' feet were crushed or legs were crushed because of trying to off-load their material on job sites. Structural steel iron has to be unloaded, sorted, and stood up before you can get it in the air. We as an industry not only want to

focus on the fatalities, but also those disabling injuries that have plagued our industry. (208X; p.34)

The final rule adds an exception for roads outside the construction site in response to a commenter (Ex. 13–214) who objected to the proposed provision because there are worksites that have city or county owned access roads. When such conditions exist, the controlling contractor does not have any authority to correct problems with the road, or to assign lay down areas for steel erectors to prepare their work. OSHA agrees with the commenters that there are circumstances where the controlling employer would not have such control, such as where a city or county owns the access roads. For this reason, OSHA has added language to the final rule to provide an exception where the controlling contractor does not have control over the road.

Paragraph (c)(2) requires that the controlling contractor provide and maintain a firm, properly graded, drained area, readily accessible to the work and with adequate space for the safe storage of materials and the safe operation of the erector's equipment. As stated in the proposed rule, SENRAC found that the controlling contractor is in the best position to minimize the hazards associated with improper site layout and conditions. The provisions in paragraphs (c)(1) and (c)(2) were derived from the AISC code of standard practice for steel buildings and bridges (Ex. 9–36).

Some commenters (Exs. 13–279, 13–210, 13–311, 13–193 and 13–164) indicated that the term ''adequate'' in the requirement in (c)(1) should be defined to delineate what would be acceptable for roads. After considering this suggestion, OSHA has concluded that no definition could be created that would encompass all possible site conditions. For this reason, OSHA has left the word adequate in the final rule, and it will be the responsibility of the controlling contractor to determine that a road is properly graded to support equipment without the danger of rollover and properly drained so that equipment can be safely maneuvered.

One commenter (Ex. 13–155) objected to the provision on the grounds that the steel erector, rather than the controlling contractor, is best able to determine access and work area needs for the work. At the hearing, a witness (Ex. 208X; p. 78–79) testified that the steel erector does not have any ability to say where the access roads and storage areas will be placed, or who can work in those areas. He went on to state that these decisions are usually made by the controlling contractor. Another witness (Ex. 202X; p. 42) testified that when he needs the access road or storage area smoothed out, he contacts the general contractor, or controlling contractor.

The record shows that it is the controlling contractor that is in the best position to ensure that the necessary changes are made (see, for example, Ex. 201X; pp. 93–95). Further, in these situations, the controlling contractor is able to make necessary changes. It will either have the personnel and equipment, or can assign the task to another contractor, to maintain site conditions. For these reasons, OSHA has not made any changes to the provision regarding the responsibility to maintain adequate site conditions.

Paragraph (d) Pre-planning of Overhead Hoisting Operations

Paragraph 1926.752(d) requires that all hoisting operations in steel erection be pre-planned to ensure that they comply with the requirements of § 1926.753(d), the paragraph regulating ''working under loads.''

The purpose of final rule paragraph (d) (paragraph (c) of the proposed rule), is to address the hazards associated with overhead loads. Specifically, these hazards include failure of the lifting device, which would create a crushing hazard, and items falling from the load, which creates a struck-by and crushing hazard, among others. Given the nature of the loads used in steel erection, either of these events could result in serious injury or death.

After reviewing comments made on this paragraph (Exs. 13–170G, 13–210, 13–218, 13–263, and 13–334) OSHA recognized that the title of the proposed paragraph—''Overhead protection'' was confusing in that it suggested that this paragraph dealt with the actual process of making lifts. In response to the comments, OSHA has changed the proposed title of paragraph (d) from ''overhead protection'' to ''pre-planning of overhead hoisting operations'' to reflect that § 1926.752(d) addresses requirements for the pre-planning of lifts and not the requirements for the actual hoisting and rigging of materials.

Commenters stated (Exs. 13–4, 13–7, 13–26, 13–63A, 13–180, 13–193, 13–215, and 13–334) that there are times when materials being lifted would be required to have a swing area that would cover areas where workers are present. In their view, this requirement would cause the controlling contractor to clear the whole site. This is not what the Committee intended nor is it what the provision requires. In addition, a similar requirement already exists in OSHA's crane and derrick standard. § 1926.550(a)(19) requires that ''all employees shall be kept clear of loads about to be lifted and of suspended loads.'' The intent of final rule 1926.752(d) is to require employers to pre-plan lifts to facilitate compliance with the overhead load requirements. Through pre-planning, employers can adjust schedules and assignments to avoid worker exposure to overhead loads. For a more detailed discussion see preamble for § 1926.753(d)—working under loads.

Paragraph (e) Site-specific Erection Plan

Paragraph § 1926.752(e) sets out criteria for site-specific erection plans. The plans must be developed by a qualified person and be available at the worksite. The standard does not require such plans for all steel erection worksites; three specific provisions of this rule allow them as alternatives to specific provisions of the standard: One, is when an employer wishes to provide ''equivalent protection'', rather than deactivating or making safety latches on hoisting hooks inoperable (§ 1926.753(c)(5)). The second is when an employer provides an alternative erection method for setting certain steel joists detailed in § 1926.757(a)(4). The third is when an employer places decking bundles on steel joists and, under certain circumstances, must document in an erection plan that the structure can support the load (§ 1926.757(e)(4)(i)). This paragraph is unchanged from the proposal. OSHA has provided Appendix A as a guideline for establishing the components of a site-specific erection plan, as recommended by SENRAC. In the proposed rule, OSHA explained why it was not requiring the employer to establish a site-specific erection plan for every site (63 FR 43462). During initial discussions, SENRAC considered a requirement for every steel erection employer to develop a site-specific erection plan in writing for every project but decided that such a requirement would be unnecessarily paperwork-intensive, especially for small businesses. A site-specific erection plan will be easier to complete once the erector has developed a model plan. Some site-specific conditions that might lead an employer to rely on an alternative rather than the requirements specified in paragraphs § 1926.753(c)(5), § 1926.757(a)(4), and § 1926.757(e)(4)(i), and examples of possible alternative methods, are addressed in the discussion of these paragraphs later in this preamble.

Section 1926.753 Hoisting and Rigging

Rigging and hoisting of steel members and materials are essential activities in

the steel erection process. This section sets safety requirements to address the hazards associated with these activities. In this final rule, new paragraphs (a) and (b) were added to clarify the application of the general crane requirements to subpart R. As indicated in the proposed introductory language, the new provisions recommended by SENRAC were designed to supplement rather than displace the requirements in § 1926.550.

Paragraph (a) of the final rule provides that all provisions of § 1926.550, the general construction requirements for cranes and derricks, apply to hoisting and rigging operations in steel erection except for § 1926.550(g)(2), the general requirements for crane or derrick suspended personnel platforms. Provisions for the use of suspended platforms in steel erection are in paragraph (c)(4) of this section.

Paragraph (b) provides that, in addition to the § 1926.550 provisions, the requirements in paragraphs (c) through (e) of this section apply as well. Final rule paragraphs (a) and (b) were added because hoisting safety is critical in steel erection operations and the § 1926.550 provisions are, in many respects, outdated.

Paragraph (c) General

Paragraph (c) contains the requirements for pre-shift inspections of cranes and rigging used in steel erection. This paragraph is redesignated from the proposal where it was paragraph (a).

Paragraph (c)(1) requires that a competent person must perform a pre-shift visual inspection of the cranes to be used for steel erection. The inspection must meet the requirements of § 1926.550 along with the supplemental requirements listed in paragraph (c) of this section. The SENRAC committee recognized that OSHA's crane standard incorporates ANSI B30.5–1968, Safety Code for Crawler, Locomotive, and Truck Cranes (Ex. 9–114), which does not reflect the most current safety requirements for modern cranes and the heavier loads they are now able to hoist. As a result, the updated crane requirements in ANSI B30.5–1994, Mobile and Locomotive Cranes standard (Ex. 9–113), are used as the principal basis for the supplemental provisions added in paragraph (c) of this section. SENRAC believed the additional inspection criteria were needed to ensure that safe equipment and procedures would be used to perform the specialized and potentially hazardous types of hoisting operations in steel erection. These include the use of cranes to hoist employees on personnel platforms (§ 1926.753(c)(4)); to suspend loads over certain employees (§ 1926.753(d)); and to perform multiple lifts (§ 1926.753(e)). In addition, SENRAC believed that a more frequent inspection is needed for cranes being used for steel erection. According to SENRAC, an inspection prior to each shift is needed to provide an added measure of protection for the specialized and potentially hazardous hoisting operations (63 FR 43462).

Section § 1926.550 requires pre-shift inspections by a competent person but does not spell out the detailed inspection requirements contained in the new § 1926.753. SENRAC determined and OSHA agrees that subpart R must address all issues relating to safety during steel erection. Hoisting operations are integral to steel erection and defects in hoisting equipment can harm steel erection workers in many ways. Therefore, it is necessary to include these requirements in this standard.

The complete visual inspection must be performed before each shift by a competent person. This person might be the operator or oiler of the hoisting equipment being used or, on a large project, the master mechanic who checks each crane. The pre-shift visual inspection must also include ''observation for deficiencies during operation'' and is anticipated to take between 10 and 20 minutes (63 FR 43462). At a minimum, the inspection must include the items listed in paragraphs (c)(1)(i)(A) through (L); namely, inspection of (A) all control mechanisms for maladjustment; (B) control and drive mechanisms for excessive wear of components and contamination by lubricants, water or other foreign matter; (C) safety devices, including, but not limited to, boom angle indicators, boom stops, boom kick-out devices, anti-two block devices, and load moment indicators where required; (D) air, hydraulic, and other pressure lines for deterioration or leakage, particularly those which flex in normal operation; (E) hooks and latches for deformation, chemical damage, cracks, or wear; (F) wire rope reeving for compliance with hoisting equipment manufacturer's specifications; (G) electrical apparatus for malfunctioning, signs of excessive deterioration, dirt, or moisture accumulation; (H) hydraulic system for proper fluid level; (I) tires for proper inflation and condition; (J) ground conditions around the hoisting equipment for proper support, including ground settling under and around outriggers, ground water accumulation or other similar conditions; (K) the hoisting equipment for level position and; (L) the hoisting equipment for level position after each move and setup during the shift.

Paragraph (c)(1)(ii) requires that if the inspection identifies a deficiency, the competent person must immediately determine whether the deficiency constitutes a hazard. The paragraph as proposed did not specify who was to make this determination. Because this type of determination requires the skills of a competent person and since the inspection is conducted by a competent person, the paragraph in the final rule explicitly states that a competent person must make the determination as to whether the deficiency constitutes a hazard. There were no comments about this paragraph.

Paragraph (c)(1)(iii) of the final rule requires that if a deficiency is determined to constitute a hazard, the hoisting equipment shall be removed from service until the deficiency is corrected. There were no objections to this paragraph.

The proposed rule contained a provision (proposed rule paragraph (a)(1)(iv)) that would have required a certification record of the pre-shift inspection of the hoisting equipment to indicate that the inspection has been completed. This certification would have included the date the hoisting equipment items were inspected, the signature of the inspector, and a serial number or other identifier for the hoisting equipment inspected. It is the Agency's policy to minimize paperwork burdens on employers. In light of the fact that the pre-shift inspection required in § 1926.550(a)(5) does not require a written certification, OSHA has omitted this requirement from the final rule.

Paragraph (c)(1)(iv) makes the operator responsible for operations under his/her direct control and gives the operator the authority to refuse any load that he/she deems unsafe. The Inpernational Union of Operating Engineers (Ex. 208X; p.55) believed it was necessary to clarify the operator's responsibilities during hoisting operations. OSHA agrees that the operator must have the authority to shut down unsafe operations of the crane. This requirement is the same as the parallel requirement in the ANSI B30.5–1968 standard for operating practices that are currently incorporated into 1926.550.

The most current ANSI standard, B30.5–1994, gives the authority to the supervisor. OSHA has adopted the approach in the previous ANSI standard because the crane operator is in a better position to make these assessments than

the supervisor. This view was explained in a letter from a professional engineering firm to the secretary of the B30 committee (Ex. 9–133):

> Control of a heavy-lifting operation solely under the direction of a supervisor or any other person who may be less qualified than he, is not prudent. The crane operator has instrumentation in the crane to base his action upon, and should be the ultimate person to make decisions about the capacity and safety of both the machine and lifting operations.

Unlike a qualified crane operator, who has the training and experience to make informed decisions about handling a crane load, a supervisor may not have the qualifications and experience necessary for safe crane operation.

Paragraph (c)(2) requires a qualified rigger to inspect the rigging prior to each shift. Two commenters (Exs. 13–148 and 13–222) stated that there is a need for a definition of ''qualified rigger'' to clarify what specific qualifications are required for that status. One commenter (Ex. 13–149) indicated that the proposal is unclear as to who is responsible for ensuring that a rigger is qualified. This commenter also asserted that this provision would encourage unsafe acts by untrained people who want to cut time and costs. Another commenter (Ex. 202X; p.7) also noted that the qualifications of a rigger were not defined. According to this commenter, this is a significant issue because a lot of responsibility is placed on the qualified rigger in the standard.

OSHA is not adding a definition for a ''qualified rigger.'' As discussed below, the Agency believes sufficient guidance exists on assessing whether a rigger is ''qualified'' under this standard.

A qualified rigger is defined as a ''qualified person'' who is performing the inspection of the rigging equipment. Based on the definition of a ''qualified person'', a qualified rigger must have demonstrated successfully the ability to solve or resolve rigging problems. Since there are no degree or certification programs for ''riggers'', they must have extensive experience to support this demonstration. The final rule requires the rigger to follow the requirements in § 1926.251, Rigging Equipment for Material Handling, which requires significant knowledge in the areas it specifies. It should be noted that a SENRAC member (Ex. 208X; p.69) testified that he is a member of an industry committee that will issue an industry standard defining the qualifications of a qualified rigger. OSHA believes that the industry will develop criteria in the near future.

Paragraph (c)(3) prohibits the use of the headache ball, hook or load to transport personnel except as provided in paragraph (c)(4) of this section. These practices are widely recognized as unsafe because of the risk of falling off the ball, hook or load (or, in a case where the load falls, falling with the load). No comments were received on this paragraph.

Paragraph (c)(4) states that employers engaged in steel erection work do not have to comply with the requirements of § 1926.550(g)(2)—Crane or Derrick Suspended Personnel Platforms if they hoist employees on a personnel platform. § 1926.550(g)(2) requires an employer to demonstrate that the use of conventional methods to access the work station ''would be more hazardous or is not possible because of structural design or workday conditions'' if the employer wants to hoist employees on a personnel platform. Final rule paragraph (c)(4) is slightly re-worded from the proposed rule for clarity. The preamble to the proposed rule explained why SENRAC believed that hoisting employees using personnel platforms is safer than climbing, why elevators cannot be used, and why hazards will be reduced by using these platforms (63 FR 43464). The work station during the steel erection process moves rapidly as pieces of structural steel are connected to each other and elevators and stairways usually cannot be installed until much of the structure has been completed. Exposure to fall hazards and the other hazards associated with erection and dismantling of scaffolds for extremely short term activities are eliminated by the use of a personnel platform.

Some commenters objected to the provision as proposed because they believe that it is feasible for steel erectors to use conventional methods of gaining access to the work station. AGC of Metropolitan Washington DC (Ex. 13–334) did not believe a blanket exemption from the personnel platform requirements for those who do steel erection work was a good idea. It was also noted by the a Department of Energy (Ex. 13–31) that relaxing the hoisting regulations for steel erection would create a double standard, since all other trades would not have the same exemption even though they often work side by side. DOE suggested that the paragraph be deleted.

The SENRAC committee believed that many steel erection activities, particularly those that are repetitive and of short duration, such as bolting-up, can be performed more safely, with greatly reduced exposure to fall hazards, when done from a personnel platform. This is largely due to the fact that the ironworker's workstations are high up, far apart, and change fairly rapidly. Use of the personnel platform would eliminate the numerous climbs up and down scaffolds, long ladders, etc. that would otherwise be required. OSHA has not relaxed the other requirements of the hoisting standard and only allows the use of personnel platforms as long as they comply with the crane standard. These requirements include performing the lift in a slow, cautious and controlled manner; holding pre-lift meetings; conducting trial lifts; requiring a safety factor of ten; and the use of engineering controls, such as anti-two blocking protection and controlled lowering capability. The rulemaking record does not indicate that the workstations of the other trades change as rapidly and span the same large distances as those of the ironworkers.

The term ''notwithstanding'' was removed from the proposed standard and the paragraph re-written for clarification of its intent.

Paragraph (c)(5) prohibits safety latches on hooks from being deactivated or made inoperable except when a qualified rigger has determined that the hoisting and placing of purlins and single joists can be performed more safely by doing so, or when equivalent protection is provided in a site specific erection plan.

SENRAC found that there are some activities in steel erection in which it is safer to hoist lighter members with a deactivated safety latch. One example is when deactivating the latch eliminates the need for a worker to climb up or onto an unstable structural member, such as a single bar joist, to unhook the member. The first part of paragraph (c)(5) requires all latched hooks to be latched in the absence of a determination by the qualified rigger that using the latch is unsafe. The second part of paragraph (c)(5) states that if the latch is deactivated without such a determination by a qualified rigger, the employer must have some form of equivalent protection in its site-specific erection plan.

Paragraph (d) Working Under Loads

Paragraph (d) (proposed rule paragraph (c)) requires routes for suspended loads to be pre-planned and prohibits employees from working under a hoisted load except for workers engaged in initial connection activities or employees who are necessary for unhooking the load. It also lists three specific requirements that must be met when these exceptions apply. The materials shall be rigged by a qualified

rigger so that unintentional displacement is prevented. Also, hooks with self closing safety latches (or their equivalent) must be used to prevent components from slipping out of the hook. The requirements in paragraph (d) were patterned after the California Code of Regulations (Ex. 9–24D1), which regulates and limits exposure to overhead loads to occasional, unavoidable instances.

In the proposal preamble, OSHA noted that although overhead passes normally can be avoided, they cannot be entirely eliminated due to the complexity of modern construction, which requires that many activities take place concurrently. On many building sites, existing buildings, structures, streets, overhead lines and similar factors make it necessary to move loads over the same work areas throughout the course of the project. On some large projects, such as the construction of power plants, many hoisting operations take place simultaneously. In such situations, cranes must be located throughout the site to provide access to every part of the project. Scheduling the work to avoid moving loads over occupied work areas is not always feasible. Although paragraph (d) allows loads to be moved overhead, it requires the employer to limit such exposure.

The final rule allows workers doing initial connection work and those required to hook or unhook loads to work under the load because overhead exposure is generally unavoidable during these activities and while hooking and unhooking loads. This is similar to other OSHA rules that allow employees to work under loads in specific work situations where it has been sufficiently demonstrated that it is infeasible to accomplish the work otherwise. For example, § 1926.704(e) of the Concrete and Masonry standard provides, ''no employee shall be permitted under precast concrete members being lifted or tilted into position except those employees required for the erection of those members.'' Section 1926.705(k)(1) of that standard allows some employees to work under suspended loads as well:

> No employees, except those essential to the jacking operation, shall be permitted in the building/structure while any jacking operation is taking place unless the building/structure has been reinforced sufficiently to ensure its integrity during erection.

An argument can be made in opposition to this paragraph that it appears to be in conflict with § 1926.550(a) of the crane standard, which explicitly prohibits employees from being exposed to suspended loads in section 1926.550(a)(19). However, the record has no data to indicate that the new rule will result in an increase in exposure to an overhead load, and OSHA is relying upon the expertise of SENRAC that the new rule will indeed lower that exposure.

As explained above, OSHA already has two exceptions to § 1926.550(a)(19) in place, which allow employees to work under loads. The final rule provides as much protection as is feasible by limiting the steel erection exception to two groups of employees who are occasionally exposed to a suspended load and specifying steps that must be followed when they are exposed to overhead loads.

In the original proposal, SENRAC recommended that OSHA eliminate the requirement to have tag lines on loads because they believed the swinging lines presented a hazard to the connectors by being in the way. They contended that these lines could knock a connector off balance if left swinging freely. OSHA agreed but the final rule continues to allow for the use of tag lines where need be to control a load.

Paragraph (e) Multiple Lift Rigging Procedure

The procedure, known as ''Christmas Treeing,'' ''multiple lifting,'' or ''tandem loading,'' is not explicitly addressed in OSHA's current steel erection standard. A specific procedure for multiple lift rigging was prescribed in the proposed rule and such a procedure is included in the final rule. SENRAC believes this procedure, when executed as prescribed in this paragraph, is a safe and effective method for decreasing the number of total crane swings and employee exposure on the steel while connecting. In the past, OSHA has not looked favorably upon ''Christmas Treeing'' because, when performed incorrectly, it can present significant hazards to workers. SENRAC committee members and other interested parties demonstrated that there is a safe way of performing christmas treeing. Multiple lifting can be done safely in steel erection work if it is executed in compliance with the method prescribed in the proposed standard (Ex. 208X; p. 51). Based on the record of this rulemaking, OSHA defers to the expertise of SENRAC on this particular practice.

Paragraph (e) of the final rule applies when a steel erector chooses to lift multiple pieces of steel at one time as an alternative to hoisting individual structural members. It limits the use of this procedure to the lifting of beams and similar structural members and requires specific equipment and work practices to be used. SENRAC (Ex. 208X; p. 51) believes that Christmas treeing is already an industry practice and that the requirements of this standard will make it safer to execute.

Some commenters (Exs. 13–60 and 13–182) assert that this is not an accepted practice throughout the industry and do not agree that this is a safe practice, even with the proposal's requirements. The record does not substantiate the view that it is an unsafe practice when the specified procedures are followed. As mentioned above, the record lacks statistics on the injury and fatality rate associated with Christmas treeing. One reason for the lack of reliable statistics pertaining to Christmas treeing activities is that it is often difficult to identify the exact cause of an accident during this activity. For example, the fact that a person fell or was struck by an object during Christmas treeing activities does not mean that it was caused by Christmas treeing itself.

The record contains evidence that there are several advantages to performing multiple lifts, especially (as demonstrated by SENRAC members) when performed using the procedures specified by this paragraph (Ex 208X; p. 44) (63 FR 43465). For example, multiple lifting can be safer than individual lifting when connecting floor beams. Floor beams are relatively light and in most cases will not safely support a bundle of steel placed upon them. The normal erection procedure requires them to be stacked on the ground and delivered to the bay one by one. The multiple lifting technique allows multiple beams to be brought to a bay in one swing of the crane. They are uniform in weight and size, which makes a multiple load a lot easier to balance and handle. Multiple lifting significantly decreases the number of times that employees who are not involved in the connection process are exposed to overhead loads. It also reduces the time a connector has to spend out on the iron because the whole process is quicker.

Bill Brown of Ben Hur Construction testified that ''Christmas treeing and your stringing iron, we find to be in our operation to be a very safe, effective, and economical way of erecting generally repetitive members in building construction.'' (Ex. 205X; p. 8)

After discussing how MLRPs can reduce the number of lifts by 80%, Mr. Brown discussed the impact of this factor on his crane operators:

> Well, the operators claim that once you get them set up in the right way to do this, it's a lot easier on them.

Like I said because if they are in a boom-up swing in swing mode, that's when steel erection seems to be the most fatiguing and the most intense work for the operators, except for putting a piece in the guy's hands who's going to make the connection.

Our operators say that by doing this and having repetition of less cycles, it's a lot more less—or it's less stressful and fatiguing * * * (Ex. 205X; p. 35)

In addition, Mr. Philip Torchio of Williams Enterprises testified that ''Multiple lift rigging procedure will improve ironworker safety as well as reducing exposure of other job site crafts through increased training, inspections, improved equipment design and selection coupled with reduced lift cycles and reduced total worker exposure time'' (Ex. 208X; p. 44). Mr. Torchio went on to state that ''* * * utilizing multiple lift procedure reduces total worker exposure time, increases worker training and mental focus. It increases equipment reliability both for crane and rigging. It requires safer crane operation and reduces total job duration. All these items contribute to increased worker safety'' (Ex. 208X; pp. 45–46).

OSHA has acknowledged the potential advantages of multiple lifting in interpretation letters such as the one dated September 9, 1993, from the Director of the Office of Construction and Engineering to the Regional Administrator of OSHA Region I which read:

Christmas treeing could indeed be productive and efficient on projects when erecting floor or roof filler beams, all of the same length and weight with similar details at each end of the beams. In large industrial projects where the location of the crane is much farther away from the bay under erection, Christmas treeing could also prove to be efficient. Further, the practice reduces the total number of swings the crane makes in each project, thus reducing the risk of exposing the workers located in the vicinity of the crane or in the path of travel of the load (Ex. 9–13G; p. 2).

The different parts of paragraph (e) address six aspects of the MLRP process: lifting criteria (paragraph (e)(1)); design, capacity of equipment (paragraph (e)(2)), load limits (paragraph (e)(3)); rigging assembly (paragraph (e)(4)); setting the members (paragraph (e)(5)); and use of controlled load lowering (paragraph (e)(6)).

The first lifting criterion in paragraph (e)(1)(i) requires that a multiple lift rigging assembly (defined in the definition section) be used. By definition, the assembly must have been manufactured by a wire rope rigging supplier. Since this is a specialized type of lift, the rigging assembly must have been designed specifically for the particular use in a multiple lift and meet each aspect of the definition.

Paragraph (e)(1)(ii) of this section states that a multiple lift may not involve hoisting more than five members during the lift. Limiting the number of members hoisted is essential to safety. SENRAC determined that five members is the maximum number that can be hoisted safely. This limit takes into account the need to control both the load and the empty rigging. It also accounts for the fact that a typical bay, which consists of up to five members, can be filled with a single lift. Too many members in a lift may create a string that is too awkward to control or allow too much empty rigging to dangle loose, creating a hazard to employees.

Paragraph (e)(1)(iii) allows only beams and similar structural members (like solid web beams and certain open web steel joists) to be lifted during a multiple lift. Other items, such as bundles of decking, meet the definition of structural members but do not lend themselves to the MLRP. A typical multiple lift member would be a wide flange beam section between 10 and 30 feet long, typically weighing less than 1,800 pounds.

Paragraph (e)(1)(iv) requires that employees engaged in a multiple lift operation must be trained in these procedures in accordance with 1926.761 (c)(1), which contains specific training requirements for employees engaged in multiple lifts. Due to the specialized nature of multiple lifts and the knowledge necessary to perform them safely, this training requirement is necessary to ensure that employees are properly trained in all aspects of multiple lift procedures.

Paragraph (e)(1)(v) prohibits the use of a crane in a multiple lift if the crane manufacturer recommends that the crane not be used for that purpose. This new provision is included for clarification purposes. Crane manufacturers often recommend that employers do not execute multiple lifting with their cranes. It has been argued that there are too many variables associated with attempting Christmas treeing and any miscalculations of those component variables (such as the weights and center of gravity of the beams, crane capacity, the stability of the load under lift conditions, and inconsistent rigging techniques) could contribute to an accident. A commenter (Ex. 13–182) noted that if crane manufacturers prohibit the practice, paragraph (e), as proposed, would allow the erector to violate 1926.550(a) of the crane standard, which requires the employer to comply with the manufacturer's specifications and limitations applicable to the operation of any and all cranes and derricks.

OSHA remains consistent in requiring employers to follow the manufacturer's recommendations and specifications for its product. If the manufacturer of a crane prohibits the use of its crane in multiple lifts and an employer uses that crane to perform a multiple lift, that employer is in violation of both § 1926.550(a) and § 1926.760(e)(1)(v) which states:

No crane is permitted to be used for a multiple lift where such use is contrary to the manufacturer's instructions.

Paragraph (e)(2) requires that employers that perform multiple lifts use multiple lift rigging assembly components assembled and designed for a specified capacity. The employer must ensure that each multiple lift rigging assembly is designed and assembled with a maximum capacity for both the total assembly and for each individual attachment point. This capacity, which must be certified by the manufacturer or qualified rigger, must be based on the manufacturer's specifications and must have a 5 to 1 safety factor for all components. The rigging must be certified by the qualified rigger who assembles it or the manufacturer who provides the entire assembly to ensure that the assembly can support the whole load, and that each hook is capable of supporting the individual members. The appropriate rigging assembly to be used is the lightest one that will support the load. Typically, one assembly is manufactured and certified for the heaviest anticipated multiple lift on the job, and this rigging is then used for all the MLRPs.

To ensure that a MLRP does not overload the hoisting equipment, the Committee recommended prohibiting the total load of the MLRP from exceeding either the rated capacity of the hoisting equipment as specified in the hoisting equipment load charts, or the rated capacity of the rigging as specified in the rigging rating chart. Several crane manufacturers have recognized that MLRP is becoming an industry practice and have accepted the use of their cranes for this purpose, provided that the crane is utilized in a manner consistent with the safe practices defined in the operator's manual and crane capacity chart (Ex. 9–30). Paragraph (e)(3) reflects these provisions.

Another commenter (Ex. 13–60) felt that multiple lifting is unsafe because forces such as rigging torques and the wind tend to make the beams helicopter, increasing the chances of the steel coming out of the choker hitch.

The commenter also felt that the only justification for taking such risks is to benefit production.

SENRAC (Ex. 208X; p. 44), however, found that these conditions can be either eliminated through engineering or controlled with proper training of the employees engaged in the lift.

Several members of SENRAC stated in full committee that the use of an MLRP reduces total employee exposure to suspended load hazards as well as to the hazards associated with crane-supported loads traveling horizontally. An MLRP is treated as an engineered lift and therefore receives the full attention of the entire raising gang. The lifts are made in a more controlled fashion due to the special rigging and physical size of the assembled load. In addition, cranes used for multiple lifts must have controlled load lowering devices.

A Committee workgroup was formed (Ex. 208X; pp. 42–60) to develop the MLRP section of the proposed regulatory text. This workgroup noted several additional benefits of MLRPs. For example, the increased weight of the load hoisted using an MLRP results in reduced swing, boom, and hoist speeds, which increases the amount of control the operator has over the lift. The workgroup also stated that crane operators report that the swing operation has the greatest potential for operator error and loss of load control, and therefore reducing the number of swings enhances safety. The workgroup believed that the reduced number and speed of swing operations associated with MLRPs would increase safety, and that lift precision would also be increased because MLRPs require that controlled load lowering devices be used on cranes making such lifts. According to the workgroup (63 FR 43466), when the operator is working in the blind (where the connectors cannot be seen), reducing the number of swing cycles is particularly important because it minimizes the opportunity for a communication error, which could cause an accident. Furthermore, the workgroup stated that the total suspended load time and the frequency of loads passing overhead are reduced for all non-erection personnel on the job when an MLRP is being performed. This was considered particularly important, because these workers normally are occupied with other tasks and often do not pay attention to suspended loads that may be passing overhead. This group of employees includes those working under canopies and partially completed floor systems who cannot see hoisted material passing overhead but could be injured if a load were dropped.

In addition, when single pieces of steel are hoisted, the emphasis is often on speed. The load is often hoisted, swung and boomed at maximum crane speed in an effort to maximize production. Under these circumstances, the Committee felt that single piece hoisting increases the potential for problems in the hoist sequence and in the final placement of each member and additionally contributes to operator fatigue.

According to the workgroup (63 FR 43466), a major safety benefit of multiple lifting is that the manipulation of the members at the point of connection limits the movement of the hoist hook, in most cases, to an area less than 10 feet in diameter and additionally requires that such movement be done at a slow speed and with maximum control. The hazard that connectors consider the most serious, that of a high speed incoming beam, is thus minimized using the MLRP process.

Paragraph (e)(4) requires that the multiple lift rigging assembly be rigged with the members attached at their center of gravity and be kept reasonably level, be rigged from the top down, and have a distance of at least 7 feet (2.1 m) between the members. In practice, these procedures mean that the choker attached to the last structural member of the group to be connected is the one attached on the rigging assembly closest to the headache ball. The next-to-last member to be connected is attached to the next lower hook on the rigging assembly, and so on. As each member is attached, it is lifted approximately two feet off the ground to verify the location of the center of gravity and to allow the choker to be checked for proper connection. Adjustments to choker location are made during this trial lift procedure. The choker length is then selected to ensure that the vertical distance between the bottom flange of the higher beam and the top flange of the next lower beam is never less than 7 feet. Thus, when the connector has made the initial end connections of the lower beam and moves to the center of each beam to remove the choker, there will be sufficient clearance to prevent the connector from contacting the upper suspended beam. Furthermore, although the OSHA letter referred to earlier (Ex. 9–13G) suggested that the beam spacing could be eight or nine feet, the Committee determined, and OSHA agrees, that seven feet is more appropriate since, in addition to the necessary clearance just mentioned, a typical connector could easily reach up and grab the member at seven feet but might have some trouble doing so if the spacing were greater.

Paragraph (e)(5) requires that the members be set from the bottom up. This is the only practical way that the members can be set, and OSHA is including this requirement for clarity and completeness.

Paragraph (e)(6) requires controlled load lowering (through the use of a controlled load lowering device) to be used whenever the load is over the connectors. This means that the cranes in a multiple lift must use controlled load lowering when lowering loads into position for the connectors to set the members. The record shows that control load lowering is essential to prevent accidents that could result from the crane operator's foot slipping off the brake, brake failure, or from the load slipping through the brake. It assures that the operator has maximum control over the load. Compliance with his requirement would have prevented the July 20, 1990, fatality in Austin, Texas, referred to in Ex. 9–13G (p. 4).

A commenter (Ex. 13–340) advocated limiting MLRP required training to those involved in the MLRP and specifying levels of training that these individuals must achieve. The commenter apparently believes the word ''all'' in section 1926.753(e)(iv) means all steel erection employees on the site. The standard states:

> All employees engaged in the multiple lift have been trained in these procedures in accordance with section 1926.761(c)(1).

The standard requires that only the employees engaged in the multiple lift have to be trained in the requirements of this paragraph in accordance with § 1926.761(c)(1), not all employees affected by the lift as the comment seems to indicate.

Section 1926.754 Structural steel assembly

This section sets forth the requirements for the assembly of structural steel. Paragraph (a) requires that the structural stability be maintained at all times during the erection process. This is a general requirement for any type of steel structure, including single story, multi-story and other structures. Since structural stability is essential to the successful erection of steel structures, this section is intended to prevent collapse due to lack of stability, a major cause of fatalities in this industry. The Agency received no comments on paragraph (a) and it is unchanged from the proposed rule. Additional requirements that specifically apply to

multi-story structures are provided in paragraph (b) of this section.

Paragraph (b)(1) requires that permanent floors be installed as the erection of structural members progresses and that there be not more than eight stories between the erection floor and the upper-most permanent floor, except where the structural integrity is maintained as a result of the design. This paragraph is identical to both the proposed rule and the existing § 1926.750(a)(1) in OSHA's previous steel erection standard.

Paragraph (b)(2) prohibits having more than four floors or 48 feet (14.6 m), whichever is less, of unfinished bolting or welding above the foundation or uppermost permanently secured floor, except where the structural integrity is maintained as a result of the design. This paragraph is the same as proposed and essentially the same as existing § 1926.750(a)(2), except for the addition pertaining to situations where structural integrity is maintained as a result of the design. The Committee recommended an exception similar to that in paragraph (b)(1) to allow for flexibility in design, and this recommendation is reflected in the final rule.

Paragraph (b)(3) requires that a fully planked or decked floor or nets be maintained within 2 stories or 30 feet (9.1 m), whichever is less, directly under any erection work being performed. This is essentially the same provision as existing § 1926.750(b)(2)(i), except for the option of installing nets in addition to the planked or decked floor options. This provision serves many purposes: limits falls of employees to 30 feet, provides falling object protection, and can be used as a staging area for emergency rescue. Paragraph (b) thus retains many of the requirements of OSHA's existing steel erection rule. No comments were received and paragraph (b) is promulgated as proposed.

Paragraph (c) of the final rule sets forth requirements that address slipping/tripping hazards encountered when working on steel structures. SENRAC pointed out that the tripping hazards posed by shear connectors (a type of attachment) on working surfaces need to be addressed in the revision of subpart R. Shear connectors are commonly found in bridges and in other types of steel structures. As explained in the preamble to the proposed rule, the Committee found that when attachments, like shear connectors, are shop-welded to the top flange of beams, the resulting projections can create a significant tripping hazard. Field installation of these attachments can significantly reduce exposure to this hazard. It is much safer to walk on a beam that is not studded with these shear connectors or otherwise covered with a temporary working surface. It also found that this would increase the productivity of employees who walk on the top flange of the structural steel because they can walk less hesitantly. Shear connectors are addressed in paragraph (c)(1) of the final rule.

Paragraph (c)(1)(i) prohibits the attachment of shear connectors (such as headed steel studs, steel bars or steel lugs), reinforcing bars, deformed anchors or threaded studs to the top flanges of beams, joists or beam attachments so that they project vertically from or horizontally across the top flange of the member until after the decking, or other walking/working surface, has been installed. Additionally, paragraph (c)(1)(ii) requires that when shear connectors are used in the construction of composite floor, roofs and bridge decks, the laying out and installation of the shear connectors shall be done after the decking has been installed, using the deck as a working platform. This paragraph also prohibits the installation of shear connectors from within a controlled decking zone (CDZ), as specified in § 1926.760(c)(8).

Many comments were received in response to the proposed paragraph (c)(1). Those opposed to the proposal shared several concerns: technical problems with field welding caused by outdoor atmospheric conditions, increased exposure to fall hazards, back injuries from field-installation of the connectors, an increased risk of falling objects, and additional costs with field installation. A wide variety of components are commonly welded in the field (such as the K, LH and DLH series steel joists addressed in § 1926.757(b), discussed below). Most of the steel beams/girders available on the market can be field welded. Preheating of steel flanges is generally not required for either shop or field installation. In addition, some commenters indicated that there are companies that already routinely field-weld shear connectors (Exs. 202X; p. 29, 44, 87; 205X; p. 359). While one commenter described extra steps that are needed for field-welding (Ex. 201X; p. 45), another commenter found that productivity was higher for field-installation (Ex. 208X; p. 166). The record does not show that atmospheric conditions or other technical obstacles pose any greater difficulties for welding shear connectors in the field than for welding other components, or that welding them in the field presents significant technical obstacles.

The claim that field-installation of shear connectors will increase the likelihood of falls (Exs. 13–176; 13–180; 13–210) is based on the assumption that workers installing shear connectors will have greater exposure to fall hazards. The provisions of this standard, however, will protect these workers. For example, § 1926.754(c)(i) prohibits the installation of the connectors until the metal decking (or other walking/working surface) has been installed. Once the decking has been installed, under § 1926.760(a)(2), perimeter safety cables must be installed. Therefore, those installing the shear connectors will have a safe walking/working surface to work from, and will be protected from the exterior fall hazard by the perimeter safety cable. Furthermore, SENRAC, as well as several commenters (Exs. 202X; p. 29, 44, 87; 203X; p. 185; 205X; pp. 166, 359), were of the view that field installation is safer then factory installation. The concern about an increased risk of back injuries has not been substantiated. In addition, the provision is designed to address the greater problem of fatal falls, which can occur if a worker trips on a shear connector.

While field-installation of shear connectors will increase the number of objects and tools aloft, and thus increase the potential for falling objects, the requirements in § 1926.759 are designed to protect against that type of risk in this and other contexts.

There were also objections raised on the grounds that compliance with paragraph (c)(1) may not always be possible in bridge construction (Exs. 13–113; 13–170G; 13–210). Specifically, a commenter stated that, in bridge construction, ''installation of shear connectors from a deck may not always be possible.'' It appears that these commenters are asserting that, in bridge construction, there may be instances where compliance with some or all of the provisions is not feasible. Because the extent and types of circumstances where this would be the case are not well defined, the Agency believes that it would be inappropriate to provide an exception for bridge work. Nor does the record clearly indicate that paragraph (c)(1) would not be feasible for bridge construction. An employer may raise these problems as an affirmative defense in individual situations.

In sum, the record shows that the use of shop installed shear connectors poses a significant safety hazard, and that the use of field-installed connectors is a feasible means of reducing that hazard. Shop-welded shear connectors result in projections on top flanges of beams/

girders that create a tripping hazard to the workers engaged in steel erection. The record supports the contention that it is safer to install the shear connectors after the decking has been installed, so that the deck can be used more safely as a working platform. Using the deck as a work platform, combined with the presence of perimeter safety cables, effectively eliminates the fall hazards associated with field installation of shear connectors. The record does not show that there are significant technical or other obstacles to field-installation. Accordingly, the provision is promulgated as proposed with only minor wording changes.

Final rule paragraph (c)(2) ''slip resistance of metal decking'' is reserved. OSHA is reserving paragraph (c)(2) to allow additional time to study the slippery surface aspects of metal decking and identify appropriate rules to reduce the risk factor from those conditions. A coalition of steel-producing and steel-related organizations (the Steel Coalition) continues to gather data and prepare recommendations to a SENRAC workgroup on slippery surfaces with respect to paragraph (c)(2). The Steel Coalition intends to identify the principal factors contributing to slip and fall injuries resulting from slippery metal decking, and devise feasible and effective approaches to reduce those risks (Ex. 9–151). Once SENRAC reviews this information and makes recommendations, the Agency will determine what actions will be taken in this area.

Paragraph (c)(3) will reduce the risk of steel erection workers slipping on coated steel members installed three years after the effective date of this standard. At that time, it will prohibit employees from walking on the top surface of any structural steel member that has been coated with paint or similar material, unless the coating has achieved a minimum average slip-resistance of 0.50 when wet on an English XL tribometer, or the equivalent measurement on another device. This paragraph does not require that the particular coated member be tested. Rather, it requires the test to be done on a sample of the paint formulation produced by the paint manufacturer. The testing laboratory must use an acceptable ASTM method and an English XL tribometer or equivalent tester must be used on a wetted surface and the laboratory must be capable of employing this method. The test results must be available at the site and to the steel erector. Appendix B lists two appropriate ASTM standard test methods that may be used to comply with the paragraph. If other ASTM methods are approved, they too are allowed under this provision.

The final paragraph differs from the proposal in two significant respects. Proposed paragraph (c)(3) would have prohibited employees from walking on the top surface of any structural steel member with a finish coat that decreased the coefficient of friction (CoF) from that of the uncoated steel. The final text sets a specific slip-resistance for the coated surface, when tested wet. In addition, proposed paragraph (c)(3) stated that the paragraph applied to coated steel installed at the effective date of the standard, rather than, as in the final, three years later.

The Hazard

Based on SENRAC's discussions, and the rulemaking record, OSHA finds that working on steel surfaces coated with paint or other protective coatings presents slip and fall hazards to employees and that this standard must reduce this hazard using feasible means. SENRAC described the hazards as the use of paint or coatings on steel for structures exposed to highly corrosive materials (such as those used in mills and chemical plants) or exposed to varying weather conditions (such as stadiums). In the proposal, OSHA set out SENRAC's concerns as follows:

> The Committee found that a major cause of falls in the steel erection industry is the presence of slippery walking, working and climbing surfaces in steel erection operations when fall protection is not used. The problem initially arises from the application of protective coatings on structural steel used, for example in the construction of mills, chemical plants and other structures exposed to highly corrosive materials as well as in the construction of stadiums or other structures exposed to varying weather conditions. It is usually impractical to leave the steel uncoated and then to paint the entire structure in the field after erection. Unfortunately, steel coated with paints or protective coatings can be extremely slippery. When there is moisture, snow, or ice on coated steel, the hazard is increased * * * (63 FR 43467).

As discussed below regarding § 1926.760, accident data in this record demonstrate that falls from elevations of 30 feet or less resulted in many ironworker injuries and fatalities. In addition, the Agency recognizes that slips on the same level also lead to many injuries. We believe that provisions to reduce the slip potential of surfaces walked on by steel erection workers are clearly needed. OSHA and SENRAC examined the factors involved in slippery surfaces and determined that the most effective and feasible approach is to increase slip resistance and allow employees to walk on only those coated surfaces which meet a threshold for acceptable slip resistance. Much of the discussion in this rulemaking involves issues regarding which slip-resistant threshold to set; whether it is feasible to measure it; and whether compliance with such a provision is technically and economially feasible.

Commenters affirmed the existence of a serious hazard from coated surfaces; many asserted that slick or slippery paint is very dangerous (Exs. 13–49, 13–66, 13–95, 13–345, 13–348, and 13–355B). Most of these commenters (Ex.13–66 and a group of 124 ironworkers in Ex. 13–355B) added that slippery paint is the worst condition they run into on structural steel, and they asked that the paint be made safe. Other ironworkers (Ex. 13–355B) asserted that epoxy paint was hazardous to erectors. All together, 230 of these ironworkers commented in support of a provision to make painted steel less slippery. A comment from a structural steel fabricator (Ex. 13–228) stated that they agreed that ''painted [steel], moist or wet, is slipperier.''

In contrast to the comments asserting that coated surfaces present a slipping hazard, a comment from an engineer for a state government agency (Ex. 13–359) stated that slippery surfaces were attributable to a variety of causes, such as weather conditions, which can reduce traction on coated or uncoated surfaces (Ex. 13–359). He added that there was no basis for the requirements that addressed a CoF in subpart R ''since there are no accepted methods for determining friction at the job site and tests would not be relevant to site conditions.'' In addition, the American Iron and Steel Institute Steel Coalition submitted a consultant's report asserting that it is not really necessary to know a CoF in evaluating pedestrian traction, and that it is important to rate the traction under various relevant conditions (Ex. 13–307A, pp. 24–25).

In response to the first concern that slippery surfaces are attributable to a variety of causes, OSHA points out that requiring less slippery coatings in no way suggests that employers should ignore other unsafe conditions. The general construction standard for training § 1926.21 requires employers to ''instruct each employee in the recognition and avoidance of unsafe conditions * * *'' This includes slipping hazards due to factors such as moisture from weather conditions and unsafe footwear. OSHA agrees however, with its expert witnesses, William English, David Underwood and Keith Vidal, who stated in their report, that

''contaminants'' (including rain water, condensation and ice) and shoe bottom construction are important factors, but are not as easily controlled as surface coatings (Ex. 17, p. 2). Also, the rule will require wet testing, thus accounting for most weather-related slip hazards.

In response to the second concern that it is not really necessary to know a CoF in evaluating traction, the final rule text does not set a required CoF—the 0.50 measurement is a slip resistance measurement for the walking surface. While related to CoF (a ratio of forces), the 0.50 referred to in the final rule is a measurement on a tester that is designed to mimic (to some extent) the dynamic forces involved in walking on a surface. While different types of shoe material (and different amounts of wear) affect the amount of traction experienced by the worker, the record shows that it is not feasible to establish a requirement that would account for all the factors that relate to the CoF. Nor would it be feasible to measure slip resistance at the site under the numerous and ever-changing ''relevant conditions.'' The English reports and testimony of English, Underwood and Vidal (as discussed below) shows that setting a requirement for the walking surface (when wet) will improve traction.

A commenter suggested that OSHA focus on ironworkers' footwear rather than specifying a slip resistance for the paint (Ex. 13–307A, pp. 2–5). The Agency finds that this type of approach would not work as a substitute for addressing the slip resistance of the paint because ironworkers' footwear typically become contaminated with mud, gravel, and other substances that would alter the slip resistance characteristics of the sole material (Exs. 203X, p. 213 and 204X, p. 292).

Other commenters recommended that only uncoated surfaces be allowed to be erected (Exs. 13–41, 13–138 through 13–142, 13–234, and 13–341). The record does not demonstrate that uncoated steel is necessary for employee safety since surface coatings can provide equivalent or greater protection against falls. Also, SJI identified several significant problems with requiring the steel to be uncoated when erected. Among these would be increased costs associated with painting the steel in the field after it was erected, which it estimated would amount to $450 to $800 million, and a slowing of the construction process by two to four weeks (Ex. 204X; p.17).

Use of the Term ''Finish Coat'

The final rule specifies the acceptable slip resistance of structural steel ''coated with paint or similar material,'' whereas the proposal limited the provision to steel which had been ''finish-coated''. This change clarifies that the provision applies to the surface of the coated structural steel when the steel is erected. OSHA believes that the rulemaking record demonstrates that the hazard posed by slippery coated steel is present irrespective of whether the coat is part of a multi-coat system. In addition, we note that both the English I study (Ex. 9–64) commissioned by SENRAC and the English II study (Ex. 17) commissioned by OSHA, which tested slippery coated surfaces, evaluated coatings that were not necessarily ''finish'' coats. According to Paul Guevin, an OSHA expert witness, the English II study looked at three types of slip-resistant primers: Alkyd paints without additives; zinc-rich primers, and alkyds or other resin-based primers with polyolefin (Ex. 18, p. 2). The modification to ''coating'' also responds to concerns that it would be difficult to determine which paints are ''finish'' coats. Thus, the reworded provision now clearly applies to steel members coated with standard shop primers where the shop primer is the uppermost coat when the steel is erected.

A number of commenters asked OSHA to clarify and/or define the term ''finish coat'' (Exs. 13–182, 13–209, 13–228, 13–363, and 13–367). One of these commenters (Ex. 13–182) opined that finish-coated means painting after erection, which they indicated was done in many situations. A fabricator (Ex. 13–228) commented that a finish coat is the final coat of a multi-coat paint system, whether it was applied in the shop or the field is immaterial. Another commenter (Ex. 13–367, p. 16) noted that ''it is frequently not possible to determine if an applied coating is a single coat or a multi-coat system''. The American Institute of Steel Construction (AISC) speculated (Ex. 13–209, pp. 31–32) that SENRAC's use of ''finish-coat'' was an attempt to address certain epoxies and polyurethanes, which are typically the second and third coats found in multi-coat paint systems, but that ''[t]he scope of the proposed rule could be twisted to apply to all paints, not merely that small segment of the market that may present a problem.'' OSHA disagrees with this characterization of the provision's intended application. By deleting the term ''finish coat,'' OSHA clarifies that the provision applies to coated steel on which employees must walk, regardless of whether the coating will remain the last coat of paint after the steel erection is over, and regardless of the chemical composition of the coating.

Benchmark Slip-Resistance Criterion

The final standard requires that coated steel must score at a minimum average slip resistance of 0.50 as measured on an English XL tribometer or equivalent reading on another tester. Proposed § 1926.754(c)(3) would have required that the structural steel surface be no more slippery than bare, uncoated steel. OSHA stated in the proposal that SENRAC, after reviewing various industry presentations, ''concluded that it could not determine a minimum value for slip-resistance or CoF, given all the variables to be considered, nor could it agree on an acceptable testing method'' (63 FR 43468).

After reviewing the entire record, OSHA has determined that it is necessary to set a specific slip-resistance value for coated steel. No other regulatory approach to reducing the risk of slipping is as appropriate. The record supports using the English XL value of 0.50 (or the equivalent) as the cutoff for acceptable coated steel surfaces on which employees may walk. The record demonstrates that acceptable testing methods will be available when the provision goes into effect.

The English II report noted that a level of 0.50 was reasonably safe and has been recognized for many years:

> The non-controversial 0.50 threshold of safety that has been recognized in the safety engineering literature and case law for 50 years would provide a vast enhancement of footwear traction that would produce a significant improvement in the safety of ironworkers working at high elevations. (Ex. 17, p.12)

In post-hearing comments (Ex. 64), Mr. Guevin explained that when the Federal Trade Commission published a proposed rule for floor polishes in 1953 it determined a minimum of 0.50 when measured on a James machine to be a safe value (Ex. 64, pp.3–4). In his testimony at the hearing (Ex. 200X; p.120), Dr. Underwood added that he understood that 0.50 came from rounding up a CoF of 0.35 to give a small margin of safety for walking slowly in a normal way. He indicated that the CoF of 0.35 came from determining a ratio of an average hip height of 3 feet (0.91m) and a common distance of 2 feet (0.61m) per step taken in a normal stride.

The English II study indicates that the recommendation of 0.50 on the English XL scale was based on the previously established benchmark of 0.50 CoF (Ex. 17, p.12). We find that the information and testimony from the rulemaking record show that 0.50 on the English XL

scale is an appropriate minimum value to designate slip-resistant surfaces when measured under wet conditions using the ASTM methods referenced in Appendix B to this subpart.

As noted above, OSHA is changing the proposed benchmark for acceptable slip-resistance, from bare steel, to a specific slip resistance value for the coated steel. Thus, there is no need for employers, paint companies or fabricators to measure the slip resistance of bare steel for purposes of complying with this standard. Some participants objected to using the slip-resistance of bare steel as the benchmark. OSHA believes that the revised provision addresses these concerns. A comment from a builder's association (Ex. 13–121) stated that ''it is next to impossible to provide CoF equal to original steel after coating it.'' The Steel Coalition wrote that the proposal's reference to a test for a comparative coefficient of friction in § 1926.754(c)(3) would not be practical or meaningful, and that coatings with a high slip-resistance score would be considered unacceptable when compared to original steel with a higher score (Ex. 13–307, pp. 35–36). The American Institute of Steel Construction (AISC) (Ex. 13–209, p. 36) stated that ''[t]he benchmark of bare steel is ambiguous.'' AISC explained that using bare, uncoated steel as a benchmark was problematic because it was impossible to find a single uniform steel surface with which to make comparisons—''there is no such thing as a uniform piece of bare steel'' (*Ibid,* p. 30). The AISC also objected on the grounds that each piece of steel would have to be tested, before and after it was coated (*Ibid,* p. 30).

The Society for Protective Coatings (SSPC) (Ex. 13–367, p 16) stated that ''* * * data from the English study [English I study] shows that a pristine millscale steel surface received one of the poorest ratings by ironworkers and by the English machine. Therefore, it is extremely risky to make an assumption about slip resistance based on whether the steel is coated or uncoated.''

During the hearing, Mr. English testified that he did not support the benchmark of original or bare steel:

> First of all, * * * pristine bare steel is pretty rare. Secondly, * * * the baseline would be variable. Thirdly, we find that pristine bare steel, it's slippery * * * And as a practical matter, it rarely occurs as a problem at erection sites (Ex. 200X; pp.115, 128–129).

Some comments supported using bare steel as the benchmark of acceptable slip-resistance. Journeymen ironworkers (54 individuals, Ex.13–207C) signed statements saying that they backed limiting coatings to the equivalent of bare steel. However they did not provide information concerning the feasibility or adequacy of relying on ''bare steel'.

In sum, the record supports OSHA's decision that bare steel is not an appropriate benchmark. We agree with the commenters who stated that there is considerable variability in bare steel surfaces due to both manufacturing specifications and extent of oxidation, that variability would also pose substantial problems in implementing the requirement, and that some bare steel is unacceptably slippery.

Test Methods

The final rule requires that beginning three years after the effective date of the rest of the standard, employees may not walk on coated steel unless the coating has been tested and found to meet the threshold 0.50 using an appropriate ASTM test method. Appendix B specifies two methods now approved by ASTM. The record shows that these methods are sufficiently accurate and yield sufficiently reproducible results for use in testing coatings to determine their compliance with the specified 0.50 measurement.

Evidence in the record shows that testing using the VIT (English XL) according to ASTM F1679–96 will provide reproducible and accurate results of the slip-resistance of coated steel: the authors of the English II study stated that the VIT has achieved satisfactory precision and bias according to ASTM E691–92 Standard Practice for Conducting an Interlaboratory Study to Determine the Precision of a Test Method. The report of their testing showed that highly consistent results were produced from repeating the VIT tests, and that there was substantial correlation between the ironworker rankings with VIT rankings.

Also, the final rule's designation of approved ASTM testing methods as appropriate to determine compliance with a performance criterion is consistent with other OSHA standards. For example, in OSHA's standard for nationally recognized testing laboratories, an ''ASTM test standard used for evaluation of products or materials'' falls under the term ''appropriate test standard'' (as set out in the introductory text to paragraph (c) of that section, § 1910.7).

Various participants, however, claimed that the two ASTM testing methods lack precision and bias statements, which in their view render those standards ''meaningless'' (see *e.g.* Dr. Kyed's testimony Ex. 204X; p. 262 and Ex. 13–367; pp. 3–4). However, various witnesses (including one who offered the position above) stated that precision and bias statements often lagged behind a new approval by ASTM of a test method. ''Test methods can be temporarily issued without these statements, but they must eventually comply with this requirement. Generally, it's a 5-year period.'' (Ex. 204X; p.262). Dr. Mary McKnight from the National Institute for Standards and Technology (NIST), testifying with a panel from the Society for Protective Coating (SSPC) [formerly the Steel Structures Painting Council], agreed that ''* * within 5 years, there will be a group of laboratories that become proficient in running the test method and who will participate in a round-robin study. At the end of this process, ASTM includes a number describing statistical significance of different responses, with a 95-percent repeatability limit and/or confidence level'' (Ex. 205X; pp. 56–68). In post-hearing comments (Ex. 71, p. 4), Mr. English stated that the ASTM F1679 precision and bias study has been approved by letter ballot, and at a recent meeting of the F13.10 Traction subcommittee, two-thirds of those present voted to find all negatives non-persuasive.

OSHA concludes that the rulemaking record demonstrates that the methods identified in Appendix B are sufficiently reliable in evaluating the slip-resistance of coated steel. The record also shows that this reliability is likely to be confirmed by the ASTM precision and bias statement process within the 5-year period this provision will be delayed.

In post-hearing comments, the major industry groups who objected to OSHA's designating ASTM methods stated that ''several of their organizations actively participate in research and development efforts involving the validation and adoption of a testing machine and test methodology appropriate to coated structural steel'' and recommended that OSHA delay the effective date for 3 years to allow further expert evaluation (Exs. 63, p. 7 and 75, p. 4). These groups also wanted this additional time to determine if implementation of the provision was feasible.

Although the ASTM methods are the best available, OSHA acknowledges that the ASTM methods lack a protocol for representative samples of steel and their preparation. The Agency anticipates that either these parallel issues will be addressed by ASTM within the time frame before paragraph (c)(3) becomes final (5 years after the effective date of the final rule) or alternative steps can be

taken to ensure accounting for these parameters.

Availability of Paints to Meet the Slip-resistance Benchmark

The final standard delays the effective date of the slip-resistant coating provision for 5 years from the date the rest of the standard becomes effective. This is a change from the proposal, which would not have delayed the effective date. OSHA finds that although some slip-resistant coatings suitable for use in the steel erection industry are now available, widespread distribution and use of suitable coatings will take additional time. We have chosen a 5-year delay in agreement with the post-hearing requests of the major organizations commenting on this issue. These organizations submitted their comments as the Unified Steel Construction Consensus Group (USCCG) (Ex. 63), a group that consists of eight large organizations as signatories. The USCCG explained that their membership represents design, engineering, fabrication, manufacturing, and field installation components of the steel construction industry. (The following organizations were listed as signatories: The Steel Joist Institute; Steel Erectors Association of America; National Council of Structural Engineers Associations; National Institute of Steel Detailing; Council of American Structural Engineers; American Institute of Steel Construction; Metal Building Manufacturers Association; and the Society for Protective Coatings). They stated that the rulemaking record was uncertain about the extent adequate coatings were now available, and that developing, testing and distributing appropriate slip-resistant coatings for the industry would take time. Also, during the rulemaking, many paint formulators and steel fabricators stated that they do not now use the specific paints tested in the English II study. (For example, see Ronner at Ex. 204X, pp. 15 and 108–109; and Appleman at Ex. 205X, pp. 139 and 157–158.) In addition, some formulators and fabricators and their representatives stated that there is a lack of information about whether the paints/coatings in use can meet the standard's slip-resistant threshold. (For example, see Ex. 13–367, pp. 7 and 17; Ex. 13–307, pp. 38–39; Ex. 13–209, pp. 36–37; and Ex. 206X, pp. 34–35.)

OSHA finds that there is some uncertainty as to the extent to which there are adequately slip-resistant coatings currently available that would meet the industry's needs. In view of the fact that there are many such coatings presently on the market (see Ex. 17, pp. 3 and 10–11; Ex. 18, pp. 1–2; Ex. 200X, pp. 54, 62–63, 70, 137–139, and 168–169; Ex. 204X, pp.193–194; Ex. 205X, pp. 139 and 157–158) and the technology for developing additional coatings is in place (see Ex. 205X, pp. 51, 93–94, 99–102, 139, 151–152, 157–158, 167–168 and 217–219; Ex. 63, pp. 3 and 7; and Ex. 64, pp. 2–3), it is reasonable to expect that the 5-year delay will provide enough time for the industry to develop coatings that comply with the final rule.

OSHA agrees that the record evidence on the availability of slip resistant paint which meets the standard is conflicting. The witnesses who conducted the English I study commissioned by SENRAC (Ex. 9–64), and the English II study commissioned by OSHA (Ex. 17), testified that one reason for conducting these studies was to determine whether slip-resistant paint was widely available for use by the steel erection industry. They contended that slip resistant paints are available. They surveyed fabricators first, to identify coatings actually in use for steel erection, tested these coatings in their studies, and found that most of them passed the tests for slip-resistance (Ex.18, pp. 1–2). In post-hearing comments (Ex. 71, p. 4), Mr. English stated that ''paints now being applied on something over 80 percent of the fabricated steel products in the U.S. can be easily made to comply with the proposed specification with no complications to application methodology, coatability, corrosion or UV resistance or any of the ''problems'' raised by * * * those opposed to this standard.'' He added that the paints that do not already comply could be brought into compliance with ''the simple addition of the plastic powder * * *'' Another witness (Ex. 205X; pp. 220–221) acknowledged that zinc-rich primers that are currently being used ''extensively'' had good slip-resistant qualities. However, he also stated that they are not generally used by the industry (*Ibid;* pp. 139 and 157–158).

Various other rulemaking participants told OSHA that the coatings used in the English studies represented only a small percentage of coatings used in steel erection. According to a telephone survey of 180 fabricators conducted by Mr. Ronner for the Steel Joist Institute (SJI) (Ex. 28), only 14 (7 percent) used the paints tested in the English II study (Ex. 204X; p. 15), and that although slip-resistant coatings are now used for various military applications such as helicopter flight decks and aircraft carriers, they are not generally used by the steel erection industry (Ex. 205X, pp. 139 and 157–158). The SSPC commented that slip-resistance has not been a design factor for coatings used on structural steel and that slip-resistant paints have not generally been tested for durability (Ex. 13–367, p. 7). A representative of the SJI (Ex. 204X, p. 13) testified that the zinc-rich primers, paint with polyolefin beads and some alkyd-based primers used in the English II study are for spray applications only, are not recommended for dip operations. He added that steel joists typically are coated by dipping them in dip tanks (Ex. 204X; p. 13), and that the industry could not spray on paints due to state and Federal environmental restrictions. These commenters assert that there is no basis for assuming that the same slip resistance would be achieved if the paints were dipped, and that there are technical problems with applying some of the slip resistant paints by dipping (See for example Mr. Ronner's testimony, Ex. 204X; p.13, and Mr. Appleman's testimony at Ex.205X; p. 93). Both Mr. Guevin and Mr. English acknowledged that they do not know if the same slip results reported in the English II study for the paints with beads would be obtained if that paint had been applied by dipping (Ex. 200X; pp. 62–63).

Promising approaches to providing slip-resistant coatings for the steel erection industry were identified during the rulemaking. As explained in the English II study (Ex. 17, p. 11) and as Mr. Guevin (Ex. 200X, p. 56) stated by ICI Devoe in Western Canada developed a slip-resistant 3-coat system, using ''DevBeads,'' an additive of polyolefin beads. However, various participants questioned whether grit particles such as polyolefin beads could be added to paints and primers in steel erection. For example, George Widas (OSHA expert witness who peer reviewed the English II study) questioned whether such coatings would retain their corrosion protection (Ex. 204X; p. 240); Mr. Sunderman of KTA Tator, Inc., questioned whether polyolefins would be degraded by ultraviolet light (Ex. 206X, p. 34–35). Mr. Sunderman also challenged the notion that specific properties of paint can be modified ''randomly'' without affecting the balance of properties, and without extensive testing and evaluation (Id, p. 35–36).

Several participants stated such that slip resistant coatings could be developed for use in steel erection , but that time would be needed to do this. Robert Kogler, a research engineer, explained that testing corrosion control materials takes several years, and they still rely very heavily on long-term exposure data, but are coming up with accelerated testing that gives us

reasonable data (Ex. 205X; p. 74, to same effect, see testimony of Dr. Appleman Ex. 205X; p. 51).

On a related issue OSHA finds that obtaining documentation or certification that coated steel meets this requirement also is feasible. However, paint manufacturers told OSHA in their post-hearing comments that they will work with interested parties to formulate, test and evaluate coatings to meet the standard's criteria (See Exs. 63, p. 7 and 75, p. 4 and 205X, p. 218). Mr. Guevin testified that based on his experience with contacting paint manufacturers to obtain slip-resistant coating for the English II study, and his knowledge of typical paint technical bulletins issued by manufacturers setting out specifications, tests conducted, and results, companies would readily certify if their coatings meet OSHA slip-index requirements in accordance with the recognized ASTM Method (Ex. 200X; p. 168). Thus, OSHA does not agree with a project manager for a steel fabricator (Ex. 13–300) who commented that the requirement was ''not viable'' because paint manufacturers will not provide documentation out of concerns for liability.

In sum, OSHA finds that although there are slip resistant coatings in use for structural steel in limited specialized applications, most of them have not been adequately tested to determine whether they comply with the standard and meet the performance needs of other kinds of structures. The coatings industry has committed to develop, test and distribute coatings that comply with this standard in a reasonable time frame. OSHA believes that the hazard of slipping on coated steel is significant; that the paint and fabrication industries feasibly can produce and use coated steel that complies with this provision within the time frame stated in the regulatory text; and in any event, there are now coatings on the market that meet the standard that can be used to some extent even before the widespread production of new slip-resistant coatings. The need for this provision is amply supported in the record. We believe that by issuing a delay of the effective date of this provision the needs of the industries affected by this provision will be met and the long-term safety concerns of the workers who must walk on these surfaces will also be met.

Paragraph (d) Plumbing-up

Paragraph (d)(1) requires that, when deemed necessary by a competent person, plumbing-up equipment shall be installed in conjunction with the steel erection process to ensure the stability of the structure. The proposed rule contained the requirement that ''connections of the equipment used in plumbing-up shall be properly secured.'' In the preamble to the proposed rule, OSHA requested public comments on whether the final rule should contain an additional requirement that ''plumbing-up equipment shall be installed in conjunction with the steel erection process to ensure the stability of the structure.'' This request for public comment was based on concerns that SENRAC members raised regarding whether or not the plumbing-up provisions are specific enough to ensure structural stability at all times during the erection process.

The Agency adopts the provision as stated in the final rule, based upon consultations with SENRAC members. To avoid the implication that plumbing-up equipment is always installed during steel erection, OSHA had added the phrase ''when deemed necessary by a competent person'' to the beginning of paragraph (d)(1). Consistent with this change, OSHA introduces final rule paragraph (d)(2) with the phrase ''when used''.

The Structural Engineers Association of Illinois (Ex. 13–308) requested that the following requirement be added: ''Plumbing-up equipment shall be in place and properly installed before the structure is loaded with construction material such as loads of joists, bundles of decking or bundles of bridging.'' The commenter stated that loading the structure before it is plumbed can change the true lines of beams and columns, altering the final alignment of the members. The Agency agrees that this clarifies the intent of the requirement to ensure that connections of the equipment used in plumbing-up shall be properly secured, and has modified the provisions by adding paragraph (d)(2) as proposed by the commenter and several SENRAC members (63 FR 43484).

Paragraph (d)(3) (proposed paragraph (d)(2)) requires the approval of a competent person before plumbing-up equipment is removed. This paragraph is slightly different from OSHA's current standard, which provided that, ''Plumbing-up guys shall be removed only under the supervision of a competent person.'' In the final rule, which is identical to the proposed rule, ''guys'' has been changed to ''equipment.'' This is necessary because ''guys'' implies guy lines only, while plumbing equipment also includes stabilizer bars and solid web members. Additionally, the term ''under the supervision'' has been changed to ''with the approval'' of a competent person for greater regulatory clarity. In addition, with respect to open web steel joists, the stabilizer plate requirement of § 1926.757(a)(1)(i) will greatly facilitate the plumbing-up of structures.

There were no comments received regarding paragraph (d). The Agency adopts the changes as proposed.

Paragraph (e) Metal Decking

This paragraph of the final standard addresses specific requirements to protect employees during the installation of metal decking. As stated in the preamble to the proposed rule, the requirements in § 1926.754(e) address many of the hazards which cause decking accidents.

One commenter (Ex. 13–312) asserted that it is difficult to apply rules designed for steel frame erection and floor decks in high rise buildings to metal roofing, and suggested that OSHA address metal roofing in a separate section. However, there is insufficient information in the record for this Agency to develop a separate provision.

In the proposal, the terms ''decking'' and ''floor decking'' were used. In order to clarify that § 1926.754(e)(1) through (e)(5) applies to all activities associated with the use of metal decking used as a support element in a floor or roof system, the terms decking and floor decking have been changed to metal decking. Metal decking as defined in § 1926.751 means a commercially manufactured, structural grade, cold rolled metal panel formed into a series of parallel ribs; for this subpart, this includes metal floor and roof decks, standing seam metal roofs, other metal roof systems and other products such as bar gratings, checker plate, expanded metal panels, and similar products. After installation and proper fastening, these decking materials serve a combination of functions including, but not limited to: a structural element designed in combination with the rest of the structure to resist, distribute and transfer loads, stiffen the structure and provide a diaphragm action; a walking/working surface; a form for concrete slabs; a support for roofing systems; and a finished floor or roof.

The National Riggers and Erectors commented (Ex. 13–314) that, as a group of steel erectors and installers of metal decking, they agree with the proposed requirements to protect employees during decking activities because decking installation is one of the most hazardous operations for an ironworker and orientation, training, and good laws are key to ensuring employee safety.

The Bridge, Structural, Ornamental and Reinforcing Ironworkers submitted

a written comment (Ex. 13–198) in support of the decking requirements and expressed their opinion that over time, accident statistics will support the proposed changes.

Paragraph (e)(1) of the final rule addresses some of the common hazards associated with hoisting, landing and placing of deck bundles. Many of the requirements of this paragraph are adapted from the *Steel Deck Institute Manual of Construction With Steel Deck* (Ex. 9–34A).

Paragraph (e)(1)(i) of the final rule requires employers to ensure that the packaging and strapping on the deck bundle are specifically designed for hoisting purposes. Bundle straps usually are applied at the factory and are intended to keep the bundle together until it is placed for erection and the sheets are ready to be spread. Decking is bundled differently; some manufacturers design the strapping to be used as a lifting device. However, hoisting a bundle by straps that are not designed for lifting is extremely dangerous. The bundle straps can break apart or loosen, creating a falling object hazard or, if a structural member is hit by the bundle or its contents, it could cause the structure to collapse (63 FR 43468). OSHA believes that compliance with this requirement will prevent these hazards. There were no comments received regarding this requirement.

Paragraph (e)(1)(ii) requires employers to secure loose items such as dunnage, flashing, or other materials placed on the top of deck bundles before a bundle is hoisted. Sometimes, to expedite unloading and hoisting, items such as dunnage or flashing are placed on the decking bundle to save time. Dunnage, for example, will be sent up with the bundle to help support it on the structure and to protect the decking which has already been installed. Id. This requirement will not allow hoisting loose items or ''piggy backing'' unless the items are secured to prevent them from falling off the bundle in the event that it catches on the structure and tilts. There were no comments regarding this requirement.

Paragraph (e)(1)(iii) requires employers to land bundles of decking on joists in accordance with § 1926.757(e)(4), which sets out the six conditions that must be met by employers before a bundle of decking is placed on steel joists where all bridging has not been installed and anchored. First, a qualified person must determine, and document in the site-specific erection plan, that the structure or portion of the structure is capable of supporting the load. The bundle of decking must be placed on a minimum of three steel joists and the joists supporting the bundle must be attached at both ends. At least one row of bridging must be installed and anchored and the edge of the bundle must be placed within one foot of the bearing surface of the joist end. The total weight of the bundle of decking may not exceed 4,000 pounds. SDI commented that a portion of the preamble to the final rule misrepresented the position of SDI in the sentence, ''The Steel Deck Institute (SDI) has indicated that, in the future, manufacturers will deliver decking in bundles that will accommodate this load limit'' (Ex. 203X; p. 99–101). Also, SDI suggested adding the following requirement: ''When an erection plan requires any maximum weight, this information must be provided to the deck manufacturer along with any other bundling instructions, i.e. provide approval labels or special marking instructions' (Ex. 13–356). SDI also stated that this must be done with sufficient lead time to allow production coordination between the erector and the manufacturer.

OSHA believes it is unrealistic to require buyers to give sufficient lead time to manufacturers. The 4,000 pound weight limit for decking bundles applies only if the employer has determined that all six conditions can be met prior to landing a bundle of decking on steel joists where all bridging has not been installed and anchored. At this time, the employer may negotiate with the manufacturer to restrict a specific bundle weight to 4,000 pounds, or the employer may also opt to install and anchor all bridging in order to continue with the erection process without delay.

Paragraph (e)(1)(iv) requires employers to land bundles on framing members in such a manner that the decking can be unbanded without losing the support of the structure. If the blocking were to move while the bundle is being unbanded, the bundle would need to have enough support to prevent it from tilting and falling.

One commenter requested adding, ''When cutting bundle straps or breaking down crates, care must be taken to prevent straps or dunnage from falling on personnel or equipment'' (Ex. 13–356). OSHA agrees that unbanding decking bundles poses hazards from falling objects and § 1926.759(b) addresses this issue. That section prohibits work below on-going steel erection activities unless overhead protection is provided.

OSHA considers hazards associated with cutting banding straps to be widely recognized throughout construction and general industries. In addition to falling straps and dunnage, cutting banding straps poses serious hazards to eyes as well as cuts, abrasions, as well as bruises, strains or other injuries while attempting to hold or secure the contents of the bundle. Training in the establishment, access, proper installation techniques and work practices required by § 1926.754(e) would be covered by § 1926.21(b)(2), OSHA's general training requirements for construction work. In addition, special training programs in § 1926.761(c) [which supplements § 1926.21] specifically address employees who work in a controlled decking zone. All recognized hazards, including those associated with cutting banding straps, would be part of the work practices training to ensure that employees recognize unsafe conditions in the work environment and know the measures to control or eliminate hazards.

Paragraph (e)(1)(v) requires employers to secure decking against displacement after the end of the shift or when environmental or job site conditions warrant. Decking may become dislodged from the structure or bundle because of conditions such as high winds. Wind can also move a sheet of loose decking and create a hazard where an employee inadvertently steps onto a sheet of loose piece of decking, believing it to be secured.

Paragraph (e)(2) Roof and Floor Holes and Openings.

This paragraph sets requirements for installing metal decking to minimize the risks of falling through holes and openings in decking.

There are differences between the use of the terms ''holes'' and ''openings'' in subpart M and subpart R. Subpart M uses the term ''hole'' to describe all holes and openings in floors, roofs and other walking surfaces and uses the term ''opening'' to apply only to holes and openings in walls. However, SENRAC used these terms differently in the proposed steel erection standard, incorporating the terms as they are commonly used by steel erection employers and employees (see the definition of ''decking hole'' for a more detailed discussion). For instance, in steel erection, the term ''hole'' means a small gap or void that presents a tripping hazard or a falling object hazard, while ''opening'' means a gap or void that is large enough for an employee to fall through.

OSHA made changes in the proposed regulatory text to clarify that § 1926.754(e)(2) applies to the installation of all metal decking supporting either a floor or roof system. The terms ''decking'' and ''floor

decking'' have been changed to read ''metal decking''.

Paragraph (e)(2)(i) requires employers to ensure that all framed metal deck openings have structural members turned down to allow continuous deck installation, except in cases where structural design constraints and constructibility do not allow this. Requiring framed deck openings to be turned down allows continuous decking to be performed without having to cut the deck around the opening. This procedure would apply to smaller openings rather than larger openings, such as elevator or mechanical shaft openings. Whereas smaller openings may be cut at a later time, it may not be appropriate to delay larger openings.

A group of fifty-four ironworkers commented and specifically agreed with the requirement that framed deck openings be turned down in order to allow continuous decking (Ex. 13–207C).

Paragraph (e)(2)(ii) requires roof and floor openings to be decked over. Where large size, configuration or other structural design does not allow for covering of the roof and floor holes and openings, they must be protected in accordance with § 1926.760(a)(1).

The committee intended the proposed standard to require continuous decking except in certain cases where continuous decking is not feasible due to structural design. For example, large openings such as elevator shafts and stairways, are typically too large to cover, and would usually be protected with a guardrail. The standard has been reworded to clearly reflect this intention.

Paragraph (e)(2)(iii) requires employers to delay cutting decking holes and openings until immediately before they are permanently filled with the equipment or structure needed or intended to fulfill their specific use. That equipment or structure must either meet the strength requirements of paragraph (e)(3) of this section, or be immediately covered. This has been revised from the proposed rule for clarity and in response to a commenter who requested a clear and concise definition of ''essential to the construction process'' in order to eliminate the many possible interpretations (Ex. 13–222).

Two commenters indicated that paragraphs (e)(2)(ii) and (iii) can be interpreted to require continuous decking over all holes which are cut out later and that this requirement would be a cost issue as well as a safety issue because covering large openings with decking may require temporary supports to sustain anticipated working loads on the deck (Exs. 201X; p.76 and 201X; p.11). We note, however, as discussed above, that paragraph (e)(2)(ii) specifically states that large openings do not have to be decked over if the employer protects employees using guardrails or other fall protection pursuant to § 1926.760 (a)(1).

Fifty-nine comments were received which expressed agreement with the proposed decking requirements (Exs. 13–207C; 13–345; 208X, pp.136–139; 203X, p.108–161; 13–198; and 13–347). One commenter indicated that his company does not allow any hole to be cut in any raised level unless the person using the hole is there, ready to cover or protect it (Ex.13–198). Fifty-four commenters agreed with delaying the cutting of deck holes and the requirement to immediately cover or protect the deck openings (Ex. 13–207C). Another 195 letters were received in support of ''covering and marking of deck holes and openings (Ex. 13–355B). One commenter added that there is no good reason to not deck over and clearly mark roofing holes (Ex. 13–355B). A commenter suggested that barricades be used to protect floor openings (Ex. 13–355B). One commenter stated that ''Covering and marking holes in the deck with strong material and painting with high visibility paint will prevent a lot of injuries.'' (Ex. 13–355B). Another commenter strongly urged that all holes and openings on the work floor be covered with plank, screens or nets and that all sheets of decking around columns should be cut into their proper place, and welded down (Ex. 13–355B).

Delaying the cutting of holes in decking was established to prevent the employee and objects from falling through the holes and eliminate tripping hazards that may be presented by covers over holes that would not be used for some time. The holes are typically smaller than those addressed in paragraph (e)(2)(i) of this section. OSHA has revised the standard to clarify these points and address the issues raised in the comments.

Paragraph (e)(3) Covering roof and floor openings.

Final rule paragraph (e)(3) addresses proper coverings required by § 1926.754(e)(2)(iii), which will protect employees from falling into or through openings in roofs and floors. These provisions have been moved in the final from proposed § 1926.760(d).

Paragraph (e)(3)(i) requires that covers be strong enough to withstand the weight of employees, equipment and materials by requiring that covers support twice that combined weight.

Proposed provision § 1926.760(d)(1) stated that covers must support the greater of (1) 30 pounds per square foot (psf) for roofs and 50 psf for floors, or (2) twice the combined weight of the employees, equipment and materials that may be on the cover. The final rule, § 1926.754(e)(3)(i), deletes the specific strength requirement of 30 psf for roofs and 50 psf for floors. These figures were based on strength requirements specified in the Steel Deck Institute's Manual of Construction with Steel Deck (Ex. 9–34A).

Mr. Philip Hodge from HABCO Inc. (Ex. 13–153), stated that some buildings designed for snow loads may not meet the 30 psf requirement and that the temporary cover, in some instances, may be stronger than the remainder of the roof if this section remained. In subpart M, in § 1926.502 (i), the Agency instituted a requirement that covers support twice the combined weight of employees, equipment and materials, rather than specifying a particular minimum psf. We believe that the subpart M approach is also appropriate here. Because the proposed provision would require unnecessarily strong covers for roof and floor openings, the provision has been modified to accord with subpart M.

Paragraphs (e)(3)(ii) and (e)(3)(iii) are unchanged from the proposal, except for being re-numbered. Paragraph (e)(3)(ii) requires that all covers be secured when installed so as to prevent accidental displacement by the wind, equipment or employees. This provision eliminates a fall hazard. Paragraph (e)(3)(iii) requires that all covers be painted with high visibility paint or be marked with the word ''HOLE'' or ''COVER'' to warn of the hazard and to prevent an employee from inadvertently removing the cover. These provisions are consistent with the requirements in subpart M.

Paragraph (e)(3)(iv) addresses the hazards associated with smoke domes and skylight fixtures. Installed smoke domes and skylight fixtures are not to be considered covers for the purposes of this section unless the strength requirement of paragraph (e)(3)(i) is met. If these structures are not capable of supporting the load, they may give way, causing a fall. Unless they have adequate strength, these structures cannot be relied upon to protect employees from falls. Employees commonly lean or sit on skylights or smoke domes and these structures need to be capable of supporting the load without failure.

Paragraph(e)(4) Decking gaps around columns.

Final § 1926.754(e)(4) (proposed paragraph § 1926.754(e)(3)) requires that wire mesh, exterior plywood, or equivalent be installed around columns where planks or metal decking do not fit tightly thus leaving a gap. The materials used must be of sufficient strength to provide fall protection for personnel and prevent objects from falling through.

Proposed paragraph (e)(3) used the term ''space.'' Three commenters explained that the proposed standard did not identify what a space is and how big a space must be (Exs. 201X, p.76; 13–173 and 13–31). One of the three commenters added that the standard should require that the material used to cover these gaps must be strong enough to prevent people and objects from falling through (Ex. 201X; p.76).

OSHA agrees that the term ''space'' is not defined and that this could lead to misinterpretations. The proposed regulatory text did not discuss the strength of the materials to be used, the only reference to the strength is in the preamble to the proposed standard which explains that gauge metal, typically cut out to the profile of the column, is commonly used for this purpose and would be considered an equivalent material.

OSHA has revised the standard to clarify the issues addressed in the comments by changing the title to ''Decking gaps around columns'' and adding strength and fit requirements to the final rule.

Paragraph (e)(5) Installation of metal decking.

Paragraph (e)(5) of the final rule (proposed paragraph (e)(4)) requires metal decking to be laid tightly and immediately secured upon adjustment to prevent accidental movement or displacement, except as provided in § 1926.760(c). Section 1926.760(c) provides for a ''Controlled Decking Zone'' (CDZ) which allows up to 3,000 square feet of decking to be unsecured until adjustment when safety attachment is then required (see discussion on ''safety deck attachment'' in § 1926.760(c)).

There were three comments received in support of the requirement to secure decking immediately after it is laid and aligned (Exs. 13–198; 13–356 and 202X, pp. 129–130). A representative of the Bridge, Structural, Ornamental and Reinforcing Ironworkers (Ex. 13–198) commented that bays of unfastened sheets are unnecessary. SDI (Ex. 13–356) agreed that all decking, whether single or multi-span, should be fastened immediately after alignment and should not be used as a working platform until properly attached. A witness (Ex. 202X, pp. 129–130) testified that stepping on, or leaving a deck sheet unsecured should be prohibited because of the following: (1) Decking can separate due to ice, snow, water, oils, or combinations of these that cause side laps to uncouple easily, (2) loose decking has an aerodynamic effect and in some winds it can fly, resulting in injuries and property damage, and (3) there are situations where the supports are not level resulting in a sag in the decking that increases the chance that two sheets could unmarry.

OSHA agrees with the requirement that all metal decking must be laid tightly and secured, once it has been aligned and adjusted, to prevent accidental movement or displacement. This may be accomplished by installing final deck attachments or safety deck attachments such as tack welding the panel, or with a mechanical attachment, such as self-drilling screws or pneumatic fasteners. In order to be consistent with the rest of Subpart R, we have revised the final rule by changing the terms ''decking,'' ''metal deck,'' ''deck,'' and ''floor decking'' to ''metal decking.'' This was done to clarify that § 1926.754(e)(5) applies to all metal decking used as a support element for either a floor or roof system. Also, the proposed requirement in the CDZ provision (proposed § 1926.760(c)(5)) that during initial placement, metal decking panels must be placed to ensure full support by structural members, has been moved to final rule paragraph § 1926.754(e)(5)(ii). This was determined to be more of an erection procedure than fall protection. Paragraph (e) of § 1926.754 (Structural steel assembly) now encompasses all of the procedures for the installation of all metal decking, whether in a CDZ or not.

Paragraph (e)(6) Derrick Floors.

Paragraph (e)(6) of the final rule (proposed paragraph (e)(5)), addresses the use of derrick floors during erection. Paragraph (e)(6)(i) requires that a derrick floor be fully decked and/or planked and the steel member connections be completed to ensure that the floor will support the intended load.

Paragraph (e)(6)(ii) requires that temporary loads on a derrick floor be distributed over the underlying support members in order to prevent spot overloading. These provisions contain essentially the same requirements as those in existing § 1926.750(b). There were no comments received regarding these provisions and they remain, in final, unchanged from the proposed rule.

Section 1926.755 Column Anchorage

This section addresses the hazards associated with column stability and, specifically, the proper use of anchor rods (anchor bolts) to ensure column stability. Section 1926.755 of the final rule specifies the criteria for column anchorage. Inadequate anchor rod (anchor bolt) installation has been identified both by SENRAC and by witnesses at the public hearing as a contributing factor to structural collapses. One participant, a connector by trade, addressed a SENRAC meeting and asserted that collapses due to poor footings and anchor bolts are currently the primary cause of connector accidents (Ex. 6–3, p. 4). This section sets out requirements for ensuring that columns are adequately stabilized during their erection to withstand construction loads.

Paragraph (a) General requirements for erection stability

The final rule differs from the proposal in several areas. First, the title of the section has been changed from ''Anchor bolts'' to ''Column anchorage''. Two commenters suggested changing the section title, the Safety Advisory Committee of the Structural, Ornamental, Rigging and Reinforcing Steel Industry (SAC) (Ex. 55) and the Unified Steel Consensus Group (USCCG) (Ex. 63). The SAC Committee suggested ''Erection Stability'' while the USCCG recommended changing the title to ''Column Anchorage''. Since the section contains several means of achieving column stability in addition to the anchor bolt requirements, the Agency believes ''column anchorage'' better describes the subject of the section.

Paragraph (a)(1) of the final rule requires that all columns be anchored by a minimum of 4 anchor rods/bolts. In addition, paragraph (a)(2) requires that each column anchor rod/bolt assembly, including the column-to-base plate weld and the column foundation, be designed to resist a minimum eccentric gravity load of 300 pounds (136.2 kg) located 18 inches (.46m) from the extreme outer face of the column in each direction at the top of the column shaft. These provisions are similar to those in proposed paragraph (a)(1) with minor changes that clarify the type and location of the eccentric load. The proposed paragraph (a)(1) has been split into two paragraphs in the final rule because there are two distinct requirements.

Several commenters objected on the grounds that this section imposes design requirements for the structure. In their

view, it is inappropriate for OSHA to set such requirements. In particular, Korte Construction Company (Ex. 13–170F) asserted that while having four anchor bolts is a good practice, the general contractor/construction manager cannot guarantee that the engineers and designers will design the building to OSHA's specifications. Additionally, they indicated that the engineers and designers specify by contract that the means and methods of construction are the contractor's responsibility. Another commenter, Summit Construction Group (Ex. 13–200) questioned whether engineers and designers will follow the regulations in the design of the structure since the engineers and designers are not identified as being required to follow Subpart R. Engineers and designers design structures for compliance only with building codes and other related industry standards to assure public safety after completion of the structure. KEUKA Construction Corporation (Ex. 13–154) opposes the idea that OSHA can, by regulation, determine how many column anchor bolts are necessary regardless of what the design architect or engineer may require. They also state that it is inappropriate for OSHA to ''micro-manage'' steel erection.

OSHA, however, strongly believes that it is as appropriate for the Agency to require that avoidable safety hazards be engineered out for the protection of those erecting the building as it is for local jurisdictions to set design criteria for the safety of the building's occupants. The report of the SENRAC statistical workgroup (Ex. 9–42 and 9–49) shows that connector fatalities are 17% of the total fatalities involving falls from heights. In addition, during SENRAC meetings, ironworker connectors identified insufficient anchor bolts as the primary cause of connector accidents (Ex. 6–3, p. 4). The record establishes that there is a hazard of columns collapsing due to anchor rod/bolt problems and this requirement is necessary to reduce the fatalities and injuries caused by inadequate anchor bolt assemblies.

An overwhelming majority of commenters agreed that 4 anchor rods/bolts should be required. According to testimony from Robert Murman of E–M–E, Inc. (Ex. 202X; pp. 83–85), ''* * * a four-bolt system is a lot safer, it's a lot easier to plumb.'' Mr. Murman went on to describe the differences between using two anchor bolts and using four, stating that:

> * * * a four-bolt system, you've got four corners holding it down. Two bolts, you've got only half of it and the other side is rocking. A lot of times you're using shims, you're shim packing, trying to get these things to plumb. The more shims you put under there, the less stability you're going to have and the greater chance of pulling the anchor bolt out or breaking an anchor bolt, shearing them off, or it could snap. If it's not placed properly, then you have to chemically or epoxy it in, and you have a chance of pulling the after-bolt out, which is only like a pencil. An anchor bolt, traditionally, is on a 90 [a 90° angle], or it's built so that it's in the concrete and holding under the footing. So when you're plumbing a column that's on a shim pack, sometimes you're loosening the nut.

Upon questioning, Mr. Murman further stated:

> When the column is going in, 90 percent of the time we set a column without a person—they'd have the guy on the ground with the impact wrench and he's going to tighten up. It's set with the crane and they cut him loose and let the choker slide down the column, and 95 percent of the time he's not up on that column, unless you have a problem with the choker not coming down, or he has to get the ladder to get up on top of your beam to connect the column and the beam together. That's when you have your greater exposure.

In describing the loads imposed on the column during erection, Mr. Murman added, ''a 200 or 250 pound person up on that ladder is really putting some stress on that [the column]. As long as you've got two anchor bolts, you've got the potential there of having it going into the hole.'' Also, Mr. Mike Cushing, testifying as part of the Ironworker panel (Ex. 205X; p. 337), when questioned whether he thought four anchor bolts on every column will make a safer situation than we have today, stated:

> I don't think I've ever seen a column go over that had four anchor bolts in it that didn't have an installation problem with the bolts * * * [h]owever, two anchor-bolt columns, I can think of about a dozen that I've seen go over. And they don't go the way the two bolts are. They go to the left or the right of the bolts, you wouldn't have that situation [with the proposed language].''

In addressing paragraph (a)(1) of the proposed rule, several commenters suggested that the standard allow for exceptions to the 4 anchor rod/bolt for posts and small columns and where four anchor rods/bolts are otherwise not feasible or necessary. The American Institute of Steel Construction (AISC) (Ex. 13–209) commented that ''[t]he provision for four anchor bolts is appropriate for large columns, but not necessarily needed for smaller posts used for stair platforms, architectural features, wall framing, mechanical support platforms, mezzanines and similar structures.'' In addition, Mr. Jim Larson (Ex. 203X; pp.16–17) testified:

> * * * [t]he requirements for four anchor bolts in all major columns is endorsed by [Steel Erectors Association of America] SEAA for additional stability according to the ironworker when they are exposed to the initial phase of erecting steel. There may be specific limited applications in which four anchor rods (anchor bolts) are not feasible on minor columns and/or secondary posts.''

Following up, Mr. Eddie Williams (Ex. 203X; pp. 24–25) stated that a small column sitting on an eight inch wall could have two anchor bolts and be stronger than four if there is not enough concrete to get coverage on the four anchor bolts. LeMessurier Consultants (Ex. 13–127) commented that ''* * * there are cases where a 4-anchor rod pattern is neither practical nor feasible, such as a column base bearing on a narrow wall, at the edge of a pit, or at some corners. For such cases, the standard should allow the structural design engineer the design flexibility of using 2 or 3 anchor rods to safely resist the 300 pound load applied at the 18-inch prescribed eccentricity.'' Another commenter (Ex. 13–151) shared the same view that ''* * * there are certain foundation considerations which prohibit an effective 4 anchor rod pattern. Typical of these are column bases on narrow walls, near the edges of pits, and at corners.'' Another commenter (Ex. 13–153) commented that the requirement as proposed ''* * * would reduce the use of steel columns embedded in masonry walls. This would encourage the construction of free-standing CMU [concrete masonry unit] walls supporting steel roofs, which is generally recognized as not as safe a construction method as a complete steel framed structure with CMU in-fill.'' The National Council of Structural Engineers Associations (Ex. 13–308) stated ''[i]n some cases, 4 anchor bolts may not provide any more stability for the column than 2 anchor bolts. The proposed rule needs to differentiate between main load bearing columns and posts.'' In addition, Basic Metal Products, Inc. (Ex. 13–245) commented that the four anchor bolt minimum is proper for main columns, but should not be required for miscellaneous ''post columns'' such as those supporting stairs, wind posts, etc.

Similarly, The Council of American Structural Engineers (Ex. 13–320) recommended that OSHA either clarify its intent as to the scope of this provision, or define ''column'' to exclude small posts, roof mounted machinery platforms and other supports which are not subject to being climbed by an ironworker during installation. The American Institute of Steel Construction (Ex. 13–209) suggested

distinguishing between columns, which clearly require the safety of four or more anchor bolts and posts, which would not.

The proposed four anchor bolt requirement appeared to cover all columns, without exception. Neither SENRAC nor OSHA intended this requirement to apply to all vertical members. Some vertical members (also called posts), are typically smaller, do not support the main structure, and are not climbed by a connector. For these reasons, such vertical members do not require the anchorage described in this paragraph. These structural members are either attached at both ends or are hung from above (such as wind posts). In contrast, a column attached at its base functions as a freestanding cantilever during some period of time in the construction process and is climbed by the connector.

The Agency agrees with the commenters that some flexibility should be provided for in the standard for these situations. The final rule, therefore, defines ''column'' to exclude posts. The Agency feels that this definition adequately addresses the feasibility concerns expressed in the record. The definitions, in the final rule, of column and post read as follows:

> Column means a load-carrying vertical member that is part of the primary skeletal framing system. Columns do not include posts.
>
> Post means a structural member with a longitudinal axis that is essentially vertical, that: (1) is axially loaded (a load presses down on the top end) and weighs 300 pounds or less, or (2) is not axially loaded, but is laterally restrained by the above member. Posts typically support stair landings, wall framing, mezzanines and other substructures.

Therefore, in the final rule, the ''Column Anchorage'' section only applies to columns and does not apply to posts. The record does not support the need to add additional exceptions. OSHA believes that the changes in the definitions are sufficient to address the concerns expressed by the commenters.

Proposed paragraph (a)(1) also stated that, ''each column anchor bolt assembly, including the welding of the column to the base plate, shall be designed to resist a 300 pound (136.2 kg) eccentric load located 18 inches (0.46 m) from the column face in each direction at the top of the column shaft.'' One commenter (Ex. 13–127) suggested that ''[t]he standard must clarify how the 18 inch eccentricity is measured along the weak axis of a typical H-shaped column. For these, the 18 inches probably should be measured from the edges of the column flanges.'' Another commenter (Ex. 13–151) suggested that when calculating the moment to be applied at the column base in the weak axis direction, OSHA needs to define whether ''face'' of a column means face of the column web or edges of the column flanges. For clarity, final paragraph (a)(2) specifies that the eccentricity is measured from the extreme outer face of the column at the top of the column shaft.

In addition, the final rule revises the term ''eccentric load'' to read ''eccentric gravity load'' to clarify the design criteria for columns. This issue was addressed by a commenter (Ex. 13–207) who felt ''horizontal load'' would better describe all of the forces imposed on the column including pulling and prying by the ironworker along with any wind factor. Mr. Doug Rutledge (Ex. 207X; pp. 116–118) testified that describing the load as a horizontal load more closely characterizes the nature of the forces. After evaluating all the characteristics of the forces applied to the column during erection, the Agency determined that ''eccentric gravity'' is a better term to describe those forces. In addition, ''and the column foundation'' has been added to clarify that the anchor bolt assembly must be designed such that the foundation (as well as the column-to-base plate weld) can resist the forces applied.

Another change is the introduction of the term ''anchor rod'' wherever the term ''anchor bolts'' was used in the proposal. Two commenters stated that the term ''anchor rod'' is the industry term that is commonly used and would be consistent with the current AISC design specifications. LeMessurier Consultants (Ex. 13–127) suggested changing the term ''anchor bolts'' to ''anchor rods'' in the standard. They stated that the AISC and the Steel Industry now refer to the anchors at column bases as anchor rods. The Structural Steel Fabricators of New England, Inc. (Ex. 13–228) commented that since not all anchorages of steel column base plates to foundations fall under the definition of ''bolts'', the industry has changed the terminology to ''anchor rods''. They recommended the new term ''anchor rods'' be substituted through the standard.

The term ''anchor bolt (anchor rod)'' has been inserted in the final rule wherever the term anchor bolt was used in the proposed rule. Since the term has just recently been changed in the industry, the Agency has elected to keep both terms in the standard for purposes of clarity.

Paragraph (a)(3) of the final rule requires that columns be set on level finished floors, pre-grouted leveling plates, leveling nuts, or shim packs which are adequate to transfer the construction loads. This provision is identical to proposed § 1926.755(a)(2). No comments were received on this paragraph.

Final rule paragraph (a)(4) requires that all columns be evaluated by a competent person to determine whether guying or bracing is needed and, if needed, be installed. This is changed from proposed paragraph (a)(3) which limited the required evaluations to ''unstable columns.'' Several commenters noted that the proposed provision was too vague because of its reliance on the term ''unstable columns.'' Others criticized it on the grounds that all columns should be guyed or braced. At the hearing, upon questioning, Mr. Jim Larson (Ex. 203X; p. 41) stated ''[i]n and of itself, * * *, the anchor bolt, four anchor bolts or two anchor bolts, I do not believe were intended to be the only method of stability''. Gibble, Norden, Champion (Ex. 13–70) commented that ''[a]ll columns must be stabilized by guy cables and to imply that a column can be safely stabilized by anchor rods will lull erectors into ignoring proper guying, resulting in an unsafe condition.''

Since the condition of a column is not known until it is evaluated, all columns need to be evaluated in order to determine whether any of them are unstable and need to be guyed or braced. Therefore, the final rule paragraph (a)(4) (proposed paragraph (a)(3)) requires that all columns be evaluated by a competent person and be guyed or braced where necessary. The Agency feels that anchor bolts alone cannot be assumed to be capable of achieving the necessary stability, and that all columns need to be evaluated and guyed or braced to resist the normal effects of wind on the partially completed structure. In support of this, Mr. Doug Rutledge (Ex. 207X; pp. 63–64) testified:

> [p]rovision should be made for allowing design innovation and improvement while still meeting the necessary performance criteria. Furthermore, I believe the standard must recognize the impossibility in some instances and the economic impracticability in other instances of achieving column stability in all instances. Such columns, I believe, should be identified by the designer of the structures, thereby signaling the erector or responsible individual that these columns require special attention. They require temporary bracing. They require guying. They require some means other than the ordinary standard of simply erecting the column and assuming the column will be self-stable.

In summary, paragraphs (a)(1) through (a)(4) requires that all columns must be secured with 4 anchor rods (anchor bolts) and evaluated by a competent person to determine whether guying or bracing is needed. In addition, posts will be excluded from the 4 anchor rod/bolt requirement by definition.

Paragraph (b) Repair, Replacement or Field Modification of Anchor Rods (Anchor Bolts)

This paragraph addresses the situation where the steel erector encounters an anchor bolt that has been repaired, replaced or modified. The steel erector often cannot visually tell when an anchor bolt has been repaired and thus will not be aware of the repair unless notified that a repair has been made. If an anchor bolt has been improperly repaired, replaced or modified, it could lead to a collapse. The intent of this paragraph is to ensure that the erector has the opportunity to make sure that any work on anchor bolts has been adequately performed.

The title of this paragraph has been changed by adding ''of anchor rods (anchor bolts)'' to clarify that this section deals with the repair, replacement and field modification of anchor rods/bolts.

Paragraph (b)(1) of the final rule prohibits the repair, replacement or field modification of anchor rods (anchor bolts) without the approval of the project structural engineer of record. Commenters supported this requirement, and it is unchanged from the provision in the proposal. Emile Troup of The National Council of Structural Engineers Association (Exs. 13–308 and 52) commented that most structural engineers would agree that repairs or necessary modifications to structural steel components should be designed or reviewed by the Structural Engineer of Record (SER). However, he also stated, that the safety or stability of the structure during construction, is the direct responsibility of the steel erector and its' ironworkers, and should not be transferred to the SER as a result of repairs or modifications. The Structural Steel Fabricators of New England (Ex. 13–228) commented that they ''* * * agree with the standard in requiring the project structural engineer of record to approve repair, modification or replacement of anchor rods.'' The Structural Engineers Association of Illinois (Ex. 13–294) agreed that modification, repair or alteration of any component should require approval from the project structural engineer of record. They went on to state that the rule ''* * * should clarify that the project structural engineer of record is not responsible to ensure that the conditions requiring modification, repair or alteration are identified * * *''

Paragraph (b)(2) of the proposed rule would have required that the Structural Engineer of Record (SER) determine whether guying or bracing is necessary if an anchor bolt was repaired, replaced or modified. This provision has not been included in the final rule. Commenters asserted that it was not within the SER's expertise to determine when guying or bracing is necessary for repaired, replaced or modified anchor rods (anchor bolts). One commenter (Ex. 13–294) stated that ''[t]he project structural engineer of record is not familiar enough with erection procedures, and is not trained to assess the stability of any column or post for interim construction loads that may or may not require temporary bracing.'' Furthermore, ''[a] competent person should make this determination based on the notification required by paragraph (b)(3) [of the proposal].''

OSHA is persuaded by this comment. Under § 1926.755(a)(4), all columns need to be evaluated by a competent person to determine whether guys or braces are necessary, including those instances where anchor rods have been repaired or replaced. The repair or replacement of anchor rods/bolts needs to be approved by the SER, but the SER should not be the one to determine whether guying or bracing of the column and frame is necessary.

Paragraph (b)(2) of the final rule (proposed paragraph (b)(3)) requires that prior to the erection of a column, the controlling contractor must provide written notification to the steel erector if there has been any repair, replacement, or modification of the anchor bolts for that column. This requirement, working in conjunction with § 1926.752(a)(2), completes a crucial communication loop. The steel erector generally does not have contact with the project structural engineer of record. The steel erector cannot rely on the controlling contractor at present to convey the approval of the project structural engineer of record for repair, replacement or modification of anchor bolts because it is not required.

OSHA received comments that fell into three categories: (1) Controlling contractors should notify the steel erector of modifications and repairs to anchor bolts (Ex. 208X, p. 77); (2) contractors that make the repairs or modification should contact the steel erector (Exs. 13–173, 13–210, 13–215, 13–222, 13–334); and (3) the steel erector should find out if repairs or modifications have been made (Exs. 201X, P. 77; 13–13–173; 13–210; 13–215; 13–222; 13–334).

OSHA agrees with the commenters who supported requiring controlling contractors to notify the steel erector of modifications and repairs; that is what the final rule requires. On the second point, OSHA notes that a problem with relying solely on the contractor or individual that makes the repair to notify the steel erector is that the steel erector may not be on site at the time of the repair. Therefore, the controlling contractor is in the best position to obtain and relay this type of information.

With regard to the comments stating that the steel erection contractors should be responsible for finding out if repairs or modifications have been made, OSHA believes that if a steel erector notices that modifications have been made, the steel erector will contact the controlling contractor as a result of this provision. The purpose of this provision is to address the fact that it is often difficult, if not impossible, for the steel erector to tell if a repair or modification has been made. This provision is designed to ensure that the erector is made aware of such changes.

Section 1926.756 Beams and Columns

Section 1926.756 sets forth requirements for connections of beams and columns to minimize the hazard of structural collapse during the early stages of the steel erection process. Recognizing that inappropriate or inadequate connections of beams and columns is hazardous and can lead to collapses and worker fatalities, OSHA, in this section, establishes performance and specification requirements to address these hazards.

Paragraph (a) General

Paragraph (a) requires that during the final placing of solid web structural members, the load must not be released from the hoisting line until the members are secured with at least two bolts per connection, of the same size and strength as shown in the construction documents. The members must be drawn up snug tight or secured by an equivalent connection as specified by the project structural engineer of record. While reflecting § 1926.751(a) of OSHA's current steel erection standard, the proposal added the alternative provision, ''or the equivalent as specified by the project structural engineer of record''. This phrase was added to allow for alternative types of connections approved by the SER, such as welding or, in the case of heavier members, the use of more than two bolts.

In addition, the final rule allows only bolts of the same strength and size as shown in the erection drawings to be used in securing the member until the final connections can be made. This will prevent collapses caused by the use of lesser strength/size bolts.

This paragraph, as set out in the proposal, did not contain the reference to cantilevered members. While no commenters directly opposed the paragraph as proposed, one commenter (Ex. 206X; p. 55) asked OSHA to address cantilevered connections. OSHA agrees that cantilevered connections need to be addressed as they may require more than two bolts due to the different load angles placed upon them while executing a double connection. Therefore, a new paragraph (a)(2) has been added requiring a competent person to determine if more than two bolts are necessary to ensure the stability of cantilevered members, and that additional bolts be installed if necessary.

Paragraph (b) Diagonal Bracing

Paragraph (b) requires that solid web structural members used as diagonal bracing be secured by at least one bolt per connection drawn snug tight or secured by an equivalent connection as specified by the project structural engineer of record. In many cases, solid web structural members, such as channels or beams, are used as diagonal bracing or wind bracing. When used for this purpose, a one-bolt connection is sufficient. These members play a different role in erection stability than members used for other purposes since these members are designed to provide stability for the final completed structure and are not used as walking/working surfaces. Compliance with this provision will provide safe connections for these members. No comments were received addressing this paragraph and the final rule is issued as proposed.

Paragraph (c) Double Connections

A double connection is a type of attachment in which the ends of two steel members join to opposite sides of a central (carrying) member—such as a beam, girder or column web—using the same bolts. The erection process is as follows: the first member is bolted to a beam, girder or column web. Later, a second member is added to the opposite side of the existing connection. This second member is attached using the same bolts (going through the same holes) that are being used to attach the first member. To attach the second member, the nuts on the first beam's bolts have to be removed and the bolts backed most of the way out; the ends of the bolts have to be flush with the surface of the central member so that the second member can be lined up with the existing holes. Only fractions of an inch of the ends of the bolts are now preventing the first beam from falling. Once the holes in the connection plate of the second member are lined up with the first beam's bolts, the bolts are pushed back through all the holes and the nuts are put back on the bolts and tightened to secure the three pieces of steel together.

This maneuver is extremely dangerous. The process often takes place with a worker sitting on the first beam. If the first beam collapses, the worker falls. The risk of collapse is high because of the tenuous grip of the loosened bolts and the possibility that the connector's spud wrench, which is used to align the second (incoming) member, may slip. If at any time the carrying member (the central member to which the first and second members are being attached) reacts to residual stresses developed through welding and/or misaligned connections at lower elevations, the carrying member can move suddenly, causing the bolts or the spud wrench to become dislodged. The second (incoming) member can also cause problems if it bumps up against the fitting or wrench end. Additionally, crane operators, wind, structural movements and the connector straining to make a tough connection impose stresses that can lead to disengagement of the connection.

The current steel erection standard does not address this hazard. SENRAC believed that double connections are essential in some steel erection designs (63 FR 43471). SENRAC's analysis of NIOSH and BLS fatality statistics (Exs. 9–14, 9–39, and 9–42) indicated that structural collapses constitute a significant cause of steel erection deaths. SENRAC also concluded that failed double connections are a major cause of structural collapses. One commenter (Ex. 207X; p. 111) believed that the ''engineering community'' could accommodate a standard that prohibited employee exposure to double connections with a few exceptions. While the record indicates that designers can engineer structures with minimal use of double connections, it does not appear to be necessary to prohibit double connections since there are means available to perform double connections safely.

Testimony on behalf of SEAA (Ex. 203X; p. 77) that attachments such as seats are already being used in the field to eliminate the double connection hazard strongly supports the view that this is a feasible means of making these connections safe. OSHA believes that the severity of the consequences of a failed double connection warrant these provisions.

The Ironworkers International Union (Ex. 208X; p. 120) commented that the hazard associated with double connections is not a design problem that should be prohibited but is a safety issue and should be addressed in the standard like other things, such as stairs, that employees use on a regular basis. Huber, Hunt, and Nichols (Ex. 201X; p. 216) emphasized the frequent exposure of connectors to the hazards of double connections and that it has become something that the individual employee has to deal with in everyday connecting They assert that when a double connection is not properly executed, the resulting failure can lead to the immediate collapse of the entire structure, endangering the connector and every other worker on or around the structure.

A commenter (Ex. 207X; pp. 57–165) suggested that double connections be identified on the erection drawings so that erector recognizes where there will be difficult connections in advance and can assure that the appropriate devices are present to eliminate the hazard. OSHA believes that double connections are already commonly indicated on erection drawings.

Paragraph (c)(1) requires that when making a double connection, the first member must remain connected to a supporting member by at least one connection bolt at all times unless a connection seat (see definition) or equivalent connection device is supplied with the members to secure the first member and prevent the column from being displaced. This requirements is the same as proposed. At a minimum, one bolt must remain wrench tight in order to keep the first member from separating from the supporting member when the nuts are removed from the bolts that are to be shared with the second member. Appendix H is added to the final rule to provide examples of equivalent connection devices. They include ''clipped end'' and ''staggered bolt'' connections.

Steel Erectors Safety Association of Colorado (SESAC) (Ex. 13–207) suggested that the provision cover all double connections, including the installation of floor beams in the web of a beam not over a column. OSHA is deferring to SENRAC expertise that it is not necessary for this provision to address floor beam (filler beam) connection hazards. SENRAC noted that the connector does not have to sit on the floor beam when making floor beam

type of double connections—the connector can sit on the header beam to which the other members are being attached. Also, the structure is much more stable by the time floor beams are ready to be installed.

Several commenters, such as FABCO (Ex. 13–21), described ways of minimizing the double connection hazard by maintaining the one bolt connection throughout the connection process. OSHA agrees that there are methods of engineering a connection point that maintain the one bolt connection requirement of paragraph (c)(1). The staggered bolt method and clipped end connection method are two ways of maintaining the one bolt connection at all times, and do not require the use of any of the alternative methods listed under paragraph (c)(1). These two methods are described in Appendix H.

A commenter (Ex. 13–207) suggested that we include a graphic to show the clipped connection as an example of how to comply with the ''one bolt in place rule''. Diagrams are included in Appendix H to show an illustration of a clipped end and a staggered bolt connection. Methods like clipped end and staggered bolt connections were discussed during the hearing and in comments but were not directly addressed in the proposed standard. The record shows that these are relatively simple and safe methods of engineering out the hazards presented by double connections.

The National Council of Structural Engineers (Ex. 13–308) suggested that we change ''wrench-tight'' to ''snug-tight'' because, they argue, the latter is a known and defined term in the steel erection industry. However, wrench-tight is a term that is consistent with 1926.751(a) of the current steel erection standard. Wrench-tight is also the term recommended by SENRAC , and OSHA defers to SENRAC on this issue

The proposed standard stated that at least one bolt with its wrench-tight nut had to remain connected to the first member unless an attached seat or similar connection device ''is present.'' That phrase has been changed to ''is supplied with the member'' to make it clear that the member must come with the device in order for the erector to be permitted to erect it.

The Steel Erectors Association of America (SEAA) (203X; p. 18) strongly supports the requirement to have seats for double connections because of the historical evidence that collapses occur from the failure of inadequately secured bolts and connection work done on semi-stable structures. The Safety Advisory Committee of the Structural, Ornamental, Rigging, and Reinforcing Steel Industry (205X; p. 328) also thought this was a simple solution to a very big problem.

The record does not include any persuasive evidence to oppose the use of a connection seat to increase the level of safety in making a double connection. However the majority of the debate was in reference to the provision in the proposal that stated: in a double connection, there must be either ''a shop-attached or field-bolted seat or similar connection device present * * *''. The testimony of SENRAC members and AISC panels indicated that there is disagreement as to whether the seats need to be shop-attached, or if a field-attachment should be permitted if there is no shop attached seat.

Some commenters, however, interpreted the proposed standard to allow only shop-attached or field-bolted seats. Under these options, the fabricator would have to either attach the seats itself in the shop or provide holes in the members for the erectors to bolt the supplied seats on in the field.

For example, the American Institute of Steel Construction (AISC) (Ex. 13–209) believed that the proposed paragraph required the attachments to be bolted to the beam and prohibited other field attachment methods like welding or clamping. They would like other methods of adding a seat to be available such as, clamping, welding, and similar positive attachment methods. Also, the Metal Building Manufacturers Association (MBMA) (Ex. 207X; p. 244) indicated that a determination by erectors in the field would be the most efficient method of complying with the standard.

On the other hand, SEAA (Ex. 203X; p. 75) believes the seats should be attached in the controlled environment of a fabrication shop. SEAA testified that while they use extra holes and clips in most of their jobs, a shop-attached clip would be greatly preferable. The SENRAC panel addressing anchor bolts, double connections, and specificity on plumbing-up (Ex. 208X; p. 108) testified that even though the placement of extra holes where double connections occur has been a standard engineering practice in 1964, the hazards that occur during double connections have not been eliminated. The panel (Ex. 208X; p. 206) also had no confidence in ''seat clamps'' and engineering clamps due to the unpredictable loads on the beams. The language ''supplied with the member'' has been substituted for ''is present'' to better reflect SENRAC's and OSHA's intent that the member arrive at the site along with the unattached seat placed on the member in close proximity to where the double connection is to be made on the member. If the seat does not accompany the member to the site, then there is no guarantee that the erector will know that it needs to field attach the seat before making the double connection. Many commenters, including the SENRAC panel and SEAA, were concerned that both the clamps and the unattached seats would end up stored in trailers or in places other than where double connections are being made. Another commenter (Ex. 203X; p. 76) was confident that if the fabricators needed to attach the seats to the beams, the chances that they would be in place during the erection process would be much greater than if the responsibility were left up to erection supervisors.

Some erectors argued in favor of a requirement to shop-attach the seats because they would have too many seat installation methods to deal with on different jobs, they contend that it will be confusing and inefficient for them to try to figure out how to install the seats in each case. Erectors also thought that it would be easier and less time consuming for them to erect steel safely if the fabricators were to install the seats in the shop.

Those who opposed the shop-attached seats, such as the Metal Building Manufacturers Association (MBMA) (Ex. 207X; p. 244) and Basic Metal Products (Ex. 13–245), stated that there are many other devices that are available to erectors to use for the many difficult connections that they have to face. The phrase in the proposed standard, ''or similar connection devices,'' meant that methods other than ''field-bolted or shop-attached seat'' are permitted. While bolting the attachment to the member is the preferred alternative method, it was not the intent of the proposed standard to prohibit other, equally effective methods. OSHA agrees that equivalent devices supplied with the member are acceptable and provides illustrations of such devices in Appendix H.

The final rule incorporates several clarifications. First, in paragraph (c)(1), the proposed phrase ''similar connection device'' has been changed to ''equivalent connection device'' to clarify that devices other than a shop attached or field bolted seat are permitted, as long as they provide equivalent protection. OSHA did not intend that the alternative ''device'' had to physically resemble a ''seat'' as implied by the term ''similar''. ''Equivalent connection device'' requires that the function of the device must mirror that of a seat and be equally effective.

Secondly, the term ''field-bolted'' has been changed to ''field-attached'' to clarify that other attachment methods, such as welding, is permitted.

Haven Steel (Ex. 206X; p. 22) asserted that OSHA does not have jurisdiction to mandate product specifications and designs over which the parties affected by the rule had little or no input. They argued that the standard should put more emphasis on the actions of the steel erector and its employees. Commenters opposing the provision were not necessarily opposed to using an attachment to secure double connection members but were opposed to requiring the manufacturers and designers to shop-install the attachments for the erectors.

Some commenters (Exs. 13–320, 13–21, and 207X; pp. 57–65) argued against both drilling holes in the members for attachments and welding the attachments because of the possibility that some structural integrity of the beams may be lost. The argument against drilling holes for attachments is the same as the one against drilling holes in columns for attaching perimeter cables in § 1926.756(f)(3) of the proposed standard. When holes are drilled in members, they argued, it may require the use of heavier, more expensive, members where they would not otherwise be needed. FABCO (Ex. 13–21) testified that putting holes in the flanges could weaken the flanges unless heavier, more expensive members were used. The Council of American Structural Engineers (Ex.13–320) added that damage may occur due to welding attachments to the columns without proper preheat and that adding holes to members that were not designed to accommodate them could degrade the structural integrity of the member. However, there is no indication in the record that the industry could not engineer in holes or weld on attachments for safety devices for the erection process, just as it routinely accommodates public safety requirements and specifications. Since double connections are a part of the design of the structure, those designing the members would know if they needed to pre-engineer additional holes for a seat or to specify a welded attachment.

OSHA acknowledges that as with other aspects of structural design, incorrect procedures and calculations when drilling holes or welding attachments could reduce the structural integrity of lightweight beams. However, the hazards of double connections made without the safeguards in this standard are great and are acknowledged by most industry experts. Alternatives to installing seats are not to use double connections at all, or to maintain the connection of one bolt with its nut ''wrench tight''. Certainly, in a worst-case scenario, concerns about ''structural integrity of beams'' can be quelled merely by using heavier members, as noted above. OSHA concurs with SENRAC on its conclusion that requirements in paragraph (c) are necessary to reduce the well acknowledged hazards of performing double connections, and that they provide considerable flexibility for compliance.

Paragraph (c) of the proposal allowed the use of a seat if the one bolt connection requirement could not be met. A commenter (Ex. 206X; p. 62) feared that erectors would use seats to temporarily connect beams until they could maneuver other members in place, therefore increasing the probability of a collapse. Temporarily connecting the bolts for the seats may invite the erector to not install the final connection bolts until large portions of the structure are ready to be plumbed up and bolted.

Paragraph (c)(2) in the final rule does not permit such a practice. It requires the erector to secure a seat (designed to support the load) to both the supporting and first members while the double connection is being made. The function of the seat is to provide support to the members until the double connection can be safely connected. Connecting the first member to the supporting member with the seat is a crucial step in making these double connections safely, since one of the dangers is that either the supporting member or the first member will be bumped or will pull away during the double connection process. The connection seat is only intended to facilitate that particular double connection.

Paragraph (c)(2) also explicitly requires that seats or equivalent devices must be designed to support the load during the double connection process. If these devices are to be used, they have to be capable of supporting the weight of the members involved; and that weight may vary significantly from job to job. The erector may not know what the magnitude of the loads are in time to have devices engineered and fabricated for the job. It is more efficient to incorporate this engineering determination into the design of the members and connections.

Some commenters, such as (Ex. 206X, p. 173), believed that it should be solely the erector's responsibility to devise a method in which to keep its employees safe by securing the steel frame of the structure. They also argued that § 1926.754(a) requires structural stability to be maintained at all times. They also point to section 7 of the AISC Code of Standard Practice as support for their position.

Under the AISC Code of Standard Practice indicates that the industry currently recognizes that it is the responsibility of the erector to stabilize the working platform of its employees. However, this does not mean that the best way to ensure that the double connection is made safely is to rely solely on the erector to make whatever arrangements it thinks are necessary. The testimony of the SENRAC members established (Ex. 208X, p. 205) that it would be unrealistic to expect most erectors to have in-house personnel who could make the technical engineering assessments necessary to determine whether a particular device would be capable of supporting the loads during a double connection. In their view, requiring that the device be supplied with the member will provide greater assurance that the device is capable of supporting the loads. The erector does not have the ability to ascertain if a column could accept additional holes or welding, nor the ability to control the column's design.

AISC (Ex. 13–209, attachments 4&5) suggested that OSHA add the phrase ''where constructibility allows'' because there are some instances, which they identified, where they believe seats or attachments will not work. Similarly, Unified Steel Consensus Group (Ex. 13–63) suggest the following addition: ''Where structural design and constructibility does not allow for a shop attached connection device, it shall be noted on the erection drawing and the erector shall adequately brace and support the structural member to prevent movement before nuts are removed from the double connection and the double connection is completed.''

The record shows that an exception that would permit double connections to be made without the specified safety precautions is neither necessary nor appropriate. The final rule permits an ''equivalent'' connection device to be supplied with the member.

Paragraph (d) Column Splices

Paragraph (d) requires that each column splice be designed to resist a minimum eccentric gravity load of 300 pounds (136.2 kg) located 18 inches (.46 m) from the extreme outer face of the column in each direction at the top of the column shaft. This paragraph has been revised to be consistent with final rule § 1926.755(a)(2) (anchor rods/bolts) and to further clarify the type and

location of the eccentric gravity load. This requirement, along with the requirements in § 1926.755(a)(1) and (a)(2) for anchor rods/bolts, will help to stabilize columns that employees have to climb during the erection process. By specifying requirements for certain key building elements, such as anchor bolts, column splices, and double connections, the standard will prevent structural collapses. This section specifies a minimum force that a column splice must withstand without failure before an employee is allowed to climb it. There were very few objections to these provisions.

The Council of American Structural Engineers (Ex. 13–320), AISC (Ex. 13–209), and Basic Metal Products (Ex. 13–245) had concerns about OSHA prescribing design specifications. They believe that the standard should not specify means, methods, or location with respect to column splices—that such requirements may compromise the structural design or seriously affect architectural finishes.

OSHA believes that it is as appropriate to require building components to meet the safety needs of those constructing a building as it is to require a completed structure to meet the safety needs of its occupants. A well established principle of occupational safety and health is that eliminating or reducing a hazard by modifying the design of whatever is posing the hazard is the preferable method of controlling a recognized hazard. OSHA anticipates that by ensuring that column splices are designed to withstand a 300 pound eccentric gravity load, the hazard of collapse due to the instability of the column should be virtually eliminated. This minimizes the number of columns that an erector will need to stabilize before employees climb them. A SENRAC workgroup, with engineering assistance, determined that 300 pounds was an appropriate load. In addition, the 300 pound eccentric gravity load is the same design criteria that is required for column anchorages in § 1926.755(a)(2).

The record does not indicate that this requirement presents significant obstacles to designers with respect to their choice of exterior finishes. Nor does it show that it would be difficult to accommodate the requirements in the structural design.

Paragraph (e) Perimeter Columns

Paragraph (e)(1) of the final rule prohibits the erection of perimeter columns unless the column extends a minimum of 48 inches (1.2m) above the finished floor to permit installation of perimeter safety cables prior to the erection of the next tier, except where constructibility does not allow. Final rule paragraph 1926.760(a)(2) requires that the perimeter safety cables be installed at the final interior and exterior perimeters of the structure's finished floors of multi-story structures as soon as the decking has been installed. When the safety cables must be attached to the perimeter columns, the columns must be at least 48 inches above the finished floor in order for the perimeter cable system to comply with the requirements of Subpart M. Paragraph § 1926.760(d) requires that perimeter safety cable systems conform to the criteria for guardrail systems in § 1926.502.

Some commenters (Exs. 13–320; 13–245; 13–209, p. 19) argued, as with section 1926.756(d), that OSHA has no jurisdiction to put design restrictions on the engineering community. Although they contended that would limit their flexibility in structural design and in the materials they use, they did not specify how their design capability would be impaired. American Bridge Co. (Ex. 206X; p.55–56) suggested that it was more appropriate to place an obligation on the contractor and erector to ensure that ''the cable [is] 42 to 45 inches above the working surface and sufficiently anchored to withstand a horizontal force of X amount of pounds at a point 45 inches above the working surface.''

OSHA is convinced that the industry can accommodate this requirement. As noted, no commenter submitted details on the extent of design impairment or examples of the projected negative effect of this requirement. It is appropriate for OSHA to require the engineering of safety elements into the design of perimeter columns if they provide support for a fall protection system. Paragraph 1926.760(a)(2) requires perimeter cables to be installed on multi-story buildings as soon as the decking is completed. OSHA agrees with SENRAC's conclusion that the presence of holes or attachments on the columns facilitates the erection of the cables therefore minimizing the installers' exposure to a perimeter fall. OSHA also agrees that columns are an appropriate and often-used support for the perimeter safety cable.

Paragraph (e)(2) requires that the perimeter columns have holes or other devices in or attached to them at 42–45 inches above the finished floor and the midpoint between the finished floor and the top hole to permit the installation of perimeter cables, except where constructibility does not allow. This allows the erector to install the cables promptly when the columns have been erected.

A commenter (Ex. 206X; pp.67–68) believed that by specifying the method of erecting perimeter cables, the industry is denied the opportunity to negotiate language in its contracts. The general contractor has no reason to include any language to protect the fabricator because it knows the OSHA regulation requires the fabricator to make the holes or attachments available to be utilized by the erectors. The fabricator has no control over the system's installation, condition, maintenance, or use and subjects the fabricator to lawsuits regarding any accident involving the perimeter safety cable systems.

Fabricators and engineers also argued that the proposal impermissibly regulates employers beyond the steel erection industry by requiring fabricators to install holes or attachment points. Some fabricators testified that this section would limit their flexibility in engineering a structure. Grewe Jenkins Design & Construction Company (Ex. 201X; p.17) stated that by requiring a shop to attach bolts or holes, it would be limiting the methods and means by which an employer may protect its employees from perimeter falls. They also argued this requirement may necessitate regulations for the design of the different types of attachments that fabricators and engineers may use. The American Institute of Steel Construction (Ex. 13–209) objected to OSHA prescribing how to manufacture its product.

A commenter representing AISC (Ex. 206X; p. 59) testified that fabricators do not control the erection sequence and schedule of placement of structural steel elements which is set forth on contract documents. Neither do they dictate, he argues, how steel erectors will utilize the holes and attachments that they are required to provide. In his view, the fabricator assumes liability because it would be difficult to defend litigation regarding system failure: (a) If they cannot be assured that it will be erected and maintained properly, and (b) if they have no prior knowledge of where and how the members with the holes or attachments are going to be installed during the erection sequence. AISC believed that this provision would make fabricators liable for any failure of the perimeter cable system, including the incorrect field installation of attachments. They assert that this would be unfair since they have no control over how the cables are installed or maintained. Hagerman Construction Corporation (Ex. 13–224) commented that additional staff would be needed and the cost of liability insurance would skyrocket. These combined factors, they

argue, could help to drive up the price of the steel members.

OSHA requires that holes or attachments for erecting perimeter cables are on or in the perimeter columns before the steel can be erected because it believes that it is appropriate to engineer safety components into a structure just as public safety specifications are adhered to in the drafting stage of a structure.

The proposed provision, paragraph (e)(3), stated that holes or devices ''shall be provided by the fabricator/supplier and shall be in or attached to perimeter columns * * *''. OSHA has revised this provision to make clear that, in addition to requiring that the columns have holes or devices, the erector may not erect perimeter columns, unless the columns comply with paragraph (e)(2). In final paragraph (e)(2), the erector is prohibited from erecting the perimeter columns in the absence of the holes or attachments.

SENRAC and OSHA agree that getting the perimeter safety cables erected properly and promptly will help to reduce the number of falls to the exterior of the building. This provision not only affects steel erectors but other trades that follow them in the construction sequence of the building. Incorporation of the perimeter system into the design of the structure enables all trades to be protected against perimeter falls most quickly and effectively.

Some commenters were not convinced that providing the erectors with attachments will help to aid in the erection of perimeter cables. Southern Iron Works (Ex. 206X; p.107) asserted that they have often provided steel erectors clips that the erectors did not use. Since the proposed standard did not expressly require the erector to use the holes or attachments supplied by the fabricator, they argued that the fabricator may needlessly incur this expense.

While the standard does not require the erectors (or any other trade) to use the holes or attachments, it does require the installation of perimeter cables (see § 1926.760). OSHA assumes that the installer of the perimeter cables will use the holes or attachments because that will be easier then the option of installing stanchions to support the cable.

An erector representing the Steel Erectors Association of America (SEAA) (Ex. 203X; pp.73–74) testified that it is common for holes/attachments to be included in contract requirements through negotiation. He stated that he had holes drilled in columns on 90% of his jobs, and that fabricators have been providing them for 5 years for projects in his area. A general contractor (Ex. 203X; p.168–169) decided that it made more sense to use holes/attachments, since using the columns does away with the need for installing stanchion posts. SEAA stated that if holes/attachments were required by regulation, steel fabricators would comply with little or no economic damage to the industry because all steel erection projects would have to follow the same rules. Erectors and fabricators are presently negotiating these sort of safety measures into their contracts.

The steel erection industry already meets a variety of architectural and public safety needs, and designs and manufactures structural components so precisely as to locate holes and calculate loads for every nut and bolt. OSHA is confident that this industry can also arrange to have these holes/attachments in perimeter columns. These holes and/or attachments will make the construction of the structure safer for the employees that have to use it as a work platform. Commenters in opposition to requiring holes and/or attachments gave no explanation in the record as to why this requirement would make it more difficult to design or produce columns.

The claim that holes/attachments would affect architectural finishes was similarly unsubstantiated. Even if there were some instances where that would be a problem, the final standard includes an exception where constructibility does not allow them to be installed.

FABCO (Ex. 13–21) stated that putting holes in the flanges could ''cripple'' the strength of the flanges unless heavier, more expensive members were used. They suggest that perimeter cables be supported by an engineered, temporary clamping device of the erector's design or, at the erector's option, by making additional holes or using shop-installed column attachments.

OSHA acknowledges that a hole in the flanges of a column could compromise the structural design of the structure, especially if the column is part of a ''moment resisting'' frame. ''Crippling'' may occur when the web is subjected to high compressive stresses from concentrated loads and/or reactions. Failure by fracture could also occur under some circumstances. However, the claim that the holes/attachments may compromise the structural design assumes that the holes would be installed only after the column was already designed, without regard to the need to accommodate the holes. However, it is clear that from an engineering standpoint, the effect of holes (or attachments) on the strength of columns needs to be factored into the structural design. The evidence that was introduced to show why that could not be done was not convincing. While in some instances larger columns might be necessary to accommodate holes, information on the number of those instances was not submitted to the record. It should be noted that holes are not required if constructability does not allow, and that the provision allows the installation of attachments instead of holes.

AISC (Ex. 13–209) stated that attachments could get damaged or cause stacking problems in stockyards. FABCO (Ex. 3–21) indicated that they could get knocked off while being delivered. While these comments indicate that more care would have to be taken, these are not particularly difficult problems to overcome. Some steel components already have angles and other protruding attachments.

Perimeter cable holes can be engineered into the original design of the columns as any other hole would be. At times, perimeter columns must be strengthened to compensate for drilling a hole in a structural member, adding cost to the process. However, OSHA believes that those instances will be minimal in comparison to the number of columns that currently are able to accommodate perimeter cable holes.

E–M–E Steel Erection Company (Ex. 202X; p.31) testified that they currently weld nuts to columns while others use washers in the field. They think that having holes put in the columns will cost a few dollars more but that they are worth the extra cost. In addition, the costs must be considered in the context of the lives that can be saved by both the fall protection afforded by the perimeter cables and by the speed in which they may be erected, which will greatly reduce employees' exposure to fall hazards while installing the cables.

The physical criteria that the perimeter cables must meet are found in § 1926.760(d)(3). That section references § 1926.502, and Appendix G repeats that section to assist employers and employees.

Section 1926.757 Open Web Steel Joists

Some of the most serious risks facing the ironworker are encountered during the erection of open web steel joists, particularly landing loads on unbridged joists and improperly placing loads on joists. Based on an analysis of ironworker fatalities from January 1984 to December 1990 OSHA determined that of the approximately 40 fatalities caused by collapse, more than half were

related to the erection of steel joists (Ex. 9–14A). Although the existing OSHA steel erection standard addresses joist hazards in a limited manner, this final rule section significantly increases protection from the most hazardous activities during joist erection. The Agency believes that the combination of specification and performance requirements in this section will provide more comprehensive protection to workers engaged in these activities.

Paragraph (a) General.

Paragraph (a) of the final rule provides general requirements for the erection of steel joists. To make the requirements of paragraphs (a)(1) through (a)(5) of the proposed rule more understandable, OSHA has reorganized them in the final rule. The requirements that relate to stabilization of the joist attached at a column are contained in paragraph (a)(1). Those joists that do not, for design reasons, attach at the columns are addressed in a new paragraph (a)(2). Paragraphs (a)(3) and (a)(4) address conditions that apply to joists that attach either at or near the columns.

Paragraph (a)(1) requires that where steel joists are utilized, and columns are not framed in at least two directions with solid web structural steel members, a steel joist (commonly referred to as the ''OSHA joist,'' see explanation below in the discussion of paragraph (a)(1)) must be field-bolted at the column except as provided in paragraph (a)(2) of this section which addresses these joists installed near the column. This paragraph is nearly identical to the existing steel erection standard provision, § 1926.751(c)(1). The final rule paragraph (a)(1) differs from the proposed paragraph (a)(1) in that it does not contain the phrase ''or near'' when describing the location of the joist in relation to the column. The SJI (Ex. 13–208) suggested deleting this language in paragraph (a)(1) and treating joists installed near the column separately because of feasibility considerations. The purpose of the stabilizer plate, required by paragraph (a)(1)(i) of this section, is to provide stabilization and prevent rotation of the extended bottom chord of the joist required by paragraph (a)(1). The Agency agrees with SJI that when the joist is not located directly at the column, it is not possible to stabilize the bottom chord using a stabilizer plate on the column, and some other means of stabilizing the bottom chord must be provided. Therefore, paragraph (a)(2) has been added to the final rule to address the situation where a steel joist attaches near, but not at, the column. SJI also suggested deleting the language, ''to provide lateral stability to the column during erection,'' which describes the purpose of bolting the joist. SJI argues that joists are not designed to do this but simply to support a uniform load. Nonetheless, this language comes from the existing standard and SENRAC believed it to be an accurate description of an additional function of this joist, whether designed for this purpose or not. Accordingly, the final rule retains this language requiring lateral stability during erection.

Final rule paragraphs (a)(1)(i) through (a)(1)(iii) refer to special requirements for joists connected at the column. Paragraph (a)(1)(i) is virtually identical to paragraph (a)(4) of the proposed rule. It requires a minimum 6-inch by 6-inch vertical stabilizer plate to extend at least 3 inches (76 mm) below the bottom chord of the steel joist. The plate is required to have a 13/16 inch (21 mm) hole placed in it to provide an attachment point for guying or plumbing cables. The SJI (Ex. 13–208) suggested language to better describe the stabilizer plate. They noted that for the stabilizer plate to function as intended, the plate would need to have a minimum length and width of 6 inches and be oriented vertically so that the bottom chord of the joist will straddle the plate. Bottom chords of joists are essentially two angle irons placed back to back with steel webbing welded in between into triangles. The space created between the angle irons by the webbing is large enough so that the bottom chord, when extended to the column, can straddle the stabilizer plate, thus preventing the OSHA joist from rotating. OSHA agrees that these changes would improve the requirement. Paragraph (a)(1)(ii) works in conjunction with paragraph (a)(1)(i) and requires that the bottom chords of steel joists at columns be stabilized to prevent rotation. This provision largely carries forward the language of proposed paragraph (a)(5). The SJI (Ex. 13–208) commented in support of this provision stating that it ''* * * clarifies and reiterates the need to prevent horizontal axis rotation of joists and joist girders during erection.''

The foregoing provisions will result in a more stable primary structure upon which to erect the remaining steel joists in each bay. Since the sequence of guying is essential to safety, a stabilizer plate provides a ready attachment point for more efficient guying, thus helping to prevent collapse as the steel is set in place.

Final rule paragraph (a)(2) attempts to clarify the proposed rule by addressing the situation where the joist required by paragraph (a)(1) of this section does not attach at the column but, rather, near the column. Two commenters (Ex. 13–208 and 13–153) suggested that the standard address this situation. It was noted by a commenter (Ex. 13–153) that this can occur at expansion joints, unequal bay spacing and non-rectangular buildings. The Agency agrees with the commenters and recognizes that the proposed rule paragraphs (a)(1) and (a)(5) could not apply unless the joist or joist girder were attached at the column. Since the joist or joist girder cannot always be attached at the columns (due to design constraints), this paragraph provides a means to ensure that the joist nearest the column, (that serves the same purpose as a joist at the column) is as stable as a joist that is attached at the column.

The Agency believes that the clarification referred to above is necessary due to the feasibility and sequencing complications that arise when OSHA joists are not attached at the column. For example, attaching a stabilizer plate to a column is much simpler than providing the same plate on a narrow solid web beam or a steel joist girder. In addition, since the sequencing of erection of the structure is frequently not known beforehand, the erector needs to stabilize the bottom chord of the OSHA joist on both sides of the column. This is necessary because erection could begin at either end of the column line as dictated by conditions at the site at the time of erection.

Accordingly, final rule paragraph (a)(2) requires that where constructibility does not allow the steel joist to be installed at the column, an alternate means of stabilizing joists must be installed on both sides near the column. Such alternate means must provide stability equivalent to OSHA joists attached at the column; be designed by a qualified person; be shop installed; and be included in the erection drawings. OSHA believes that, even though OSHA joists are attached to the column the overwhelming majority of the time, workers need to receive the same protection from collapse when the OSHA joist is attached near the column. Thus, the alternate means of stabilization must be considered and planned in the early stages of design and material preparation.

An additional protection that was intended by SENRAC but not specifically referred to in the proposal had to do with the release of hoisting cables for OSHA joists. The Committee addressed timing of the release of hoisting cables for all joists other than OSHA joists in § 1926.757(d). Seeing the need for clarification, SJI recommended

language addressing the release of hoisting cables from the OSHA joist (Ex. 13–208). Accordingly, both final paragraphs (a)(1) and (a)(2) of this section require that hoisting cables not be released until the seat at each end of the steel joist is attached and the joist is stabilized. For OSHA joists that are field-bolted at the column, paragraph (a)(1)(iii) prohibits hoisting cables from being released until the seat at each end of the joist is bolted and both ends of the bottom chord of the joist are restrained by the stabilizer plate. In addition, for OSHA joists installed near the column, paragraph (a)(2)(ii) prohibits hoisting cables from being released until the seat at each end of the joist is field-bolted and the joist is stabilized.

Paragraph (a)(3) (proposed paragraph (a)(2)) requires that a steel joist (OSHA joist) at or near the column that spans 60 feet or less be designed with sufficient lateral stiffness that the joist does not need erection bridging to maintain its stability when an employee goes out onto it to release the hoisting cable. Since the joist at the column is the OSHA joist and is either the first joist in place or the joist that boxes the bay, there is no other joist in place nearby for the erector to attach erection bridging. Therefore, without this provision, compliance with the final rule's bridging requirements would be infeasible for an OSHA joist. Consequently, the OSHA joist itself must possess sufficient lateral stiffness to allow the erection process to progress safely. One comment (Ex. 13–208) was received in support of the requirement. The commenter felt that the need to design and manufacture heavier joists for placement at columns is reasonable to insure the safe placement of these critical OSHA joists.

Paragraph (a)(4) of the final rule (proposed paragraph (a)(3)) addresses a longer steel joist at the same position. This provision requires that steel joists located at or near the column that span more than 60 feet must be set in tandem, i.e., two steel joists must be attached together, usually with all bridging installed (both bolted diagonal erection and horizontal bridging). These larger OSHA joists are commonly used in open structures such as warehouses, gymnasiums and arenas. This provision also allows the use of alternate means of erection of such long span steel joists, provided that the alternative is designed by a qualified person to ensure equivalent stability and is included in a site-specific erection plan. This paragraph is effectively the same as proposed paragraph (a)(3) except that ''or near'' was added as explained above. According to SJI (Ex. 13–208), joists tied together with standard bridging will not possess sufficient stability to serve as a working platform in all cases. However, both the proposed rule and the final rule require that the erector install all bridging (not just erection bridging) when these long joists are set in tandem as OSHA joists.

Compliance with these provisions should help to satisfy the stability requirements of paragraph (a)(5) of this section (proposed paragraph (a)(6)). Paragraph (a)(5) prohibits the placement of steel joists or steel joist girders on any support structure unless it has been stabilized. This is essentially the same as proposed paragraph (a)(6) but it has been revised to include steel joist girders along with steel joists. This language change was recommended by SJI (Ex. 13–208). They also commented in support of the requirement by stating that this paragraph to stabilize joist support structures is one of the best elements of the steel erection standard and will substantially enhance worker safety in steel erection. OSHA agrees that the provision needs to include steel joist girders for consistency since they are also connected to the support structure.

Another commenter (Ex. 13–210) indicated that the term ''stabilized'' is open to interpretation and should be defined. OSHA disagrees and feels that the requirements in paragraphs (a)(1) through (a)(4) of this section together with provisions in several other sections of the standard adequately set out the stability requirements for the structure without the need to define ''stabilized''.

Paragraph (a)(6) (proposed paragraph (a)(7)) of the final rule addresses the hazard that arises when a single steel joist or a bundle of joists are placed on the structure and then left unattended and unattached. An example of this might involve lighter steel joists, under 40 feet in length, that would not require erection bridging under this section. A common practice in erecting these lighter joists, which can be set in place by hand, is to have a crane set the columns, steel joist girders, or solid web primary members and bolted joists at the columns as required by paragraph (a)(1) of this section, thus boxing the bays. The crane would then place a bundle of filler joists at an end or, more likely, at the center of the bay for installation by hand, and then move on to the next bay. Because cranes are among the more costly pieces of equipment on a steel erection job, minimizing crane time at the site is cost effective. This provision requires that, when steel joists are landed on structures, they be secured to prevent unintentional displacement, *i.e.,* the bundles must remain intact prior to installation until the time comes for them to be set. This paragraph also prevents those ironworkers who are shaking out the filler joists from getting too far ahead of those workers welding the joists, a practice that leaves many joists placed but unattached. Paragraph (b)(3) of this section, discussed below, requires that at least one end of each steel joist be attached immediately upon placement in its final erection position and before additional joists are placed. Another example of a situation addressed by this paragraph is if the exact dimensions of a piece of mechanical equipment to be installed in the decking are not known. A common practice, when this occurs, is to leave a joist unattached until the dimension is known. This paragraph requires such a joist to be secured (probably to the support structure or an attached joist) pending its final attachment. One comment was received by SJI (Ex. 13–208). SJI supported this provision stating that it ''* * * will greatly reduce accidental displacement caused by striking the bundles while placing other construction materials.'' This paragraph is substantively unchanged from the proposed rule.

Paragraph (a)(7) of the final rule (proposed paragraph (a)(11)) addresses the potential for failure that can occur when a steel joist or joist girder is modified from its original manufactured state. As reflected in the proposed rule, the Agency believes modifications to joists can have disastrous consequences if performed by jobsite personnel without taking into account the design characteristics of the joist or joist girder. This provision prohibits modification without the prior approval of the project structural engineer of record. The only change to this provision from the proposed rule is the inclusion of steel joist girders for consistency since neither joists or joist girders should be modified without SER approval. This language change was recommended by SJI (Ex. 13–208).

Final rule paragraph (a)(8)(i) requires that, except for steel joists that have been pre-assembled into panels (panelized), connections of individual steel joists to steel structures in bays of 40 feet (12.2 m) or more shall not be made unless they have been fabricated to allow for field bolting during erection. This means that both the joists and the supporting member must be fabricated with holes to allow the joists to be bolted to the supporting structure; otherwise they are prohibited from being erected. Final rule paragraph (a)(8)(ii) requires that, unless

constructibility does not allow, these connections must be made by field bolting.

These paragraphs replace paragraph (a)(8) of the proposed rule, and have been modified to require that the holes in the joists be used for the connection of the joists and to allow for welding of the joists in situations where constructibility will not permit the joists to be bolted. As reflected in the proposed rule, the Agency has found that many long steel joists that are placed in bays of 40 feet or more have a greater tendency to twist or rotate, which creates hazards for the workers installing them. This finding was based on several examples of hazardous situations that steel erectors encounter when working with these long joists. The record shows that certain joists that are thin and flexible can be difficult to install because of their ''sweep'' (tendency to bend). Bolting these types of joists first allows straightening of the joist, correcting its camber and eliminating torque. Additionally, after bolting, final welding can be more easily accomplished. Bolting is safer whenever unattached joists could be displaced by wind or construction activity, by the movement of employees, by trailing welding leads, by accidental impact against the supporting structure by a crane or other equipment, or by harmonic motion, or vibration. Further, joists can roll and pop welds due to the movement of a worker on the joist or the stresses caused by removing the sweep, which could cause a collapse. Finally, there are unique hazards associated with welding. These include impairment of the vision and balance of an employee working at elevation while wearing a welding hood.

Many comments were received in response to proposed paragraph (a)(8). These comments fell into three major groups. In the first group of comments, the commenters claimed that holes for bolting joists were not needed because: (1) Welding joist ends [instead of bolting] is not dangerous; (2) there are no data supporting a need for the requirement; and (3) the holes will have to be drilled, but bolting was optional, many of the holes would not be used by the erector. Consequently, they claimed, millions of unused holes would be needlessly drilled. They contended that welding is really a safety concern, in this situation OSHA should require that the holes be used.

Addressing the first and second issue of this group, several commenters stated that welding joist ends is not dangerous and there are no statistics to support the need for the requirement. They contended that the assumption that welding joist ends is more hazardous than bolting is not supported by industry data. Specifically, some commenters referred to a Steel Joist Institute (SJI) study of 100 accidents involving steel joists over a 14 year period which showed that none were a result of welding joist ends. Some commenters also referred to OSHA IMIS data reviewed by both OSHA staff and a SENRAC workgroup (Exs. 9–14A and 9–42) showing no fatalities related to joist end welding over the seven and eleven year periods, respectively. Two commenters (Ex. 13–9 and 13–18) stated that, based on their experience, they had never heard of or witnessed an accident related to welding of joists. The Steel Joist Institute (Ex. 66), referring to the SENRAC meetings, comment period and public hearing, stated ''[n]o data was produced which suggests that bolting is inherently safer than the welding of joist ends to their supporting members.''

OSHA's accident data do not cast any light on whether welding of joist ends is a hazard. These data in many cases do not provide enough detail as to the role of welding in the reported accidents involving joists.

Addressing the third issue of this group, numerous commenters asserted that the proposed rule would require millions of holes to be drilled or punched, most of these holes would not be used since the proposal did not require that these members be bolted. These concerns become moot since the final rule does require that the members be bolted unless constructibility does not allow. Eleven commenters specifically stated that, since the requirement would be optional, erectors would most likely choose not to use the holes. One commenter in particular (Ex. 13–158) stated that ''[i]t is apparent that this provision would cause joist manufacturers and steel fabricators to punch or drill millions of unnecessary holes every year.'' Several other commenters (Exs. 13–21, 13–25, 13–97, 13–186 and 13–279) also suggested that millions of holes will be drilled or punched and will not be used. One commenter (Ex. 13–290) stated ''* * * these connections would not be used especially since they are optional.'' Another commenter (Ex. 13–144) responded ''[t]he only significant effect of this new requirement is increasing the cost of fabrication of steel girders.'' and ''* * * it only requires manufacturers to provide the holes in the girders. The proposed rule does not require the steel erectors to actually use the holes.'' A commenter (Ex. 13–309) stated they believe that ''* * * this rule will add cost to fabrication of joists and that the bolted connections will not be used by steel erectors in the field.'' Metro Fabricators, Inc. (Ex. 13–62) responded ''[d]ue to the additional cost involved in bolting each joint, our erectors (subcontracted) have indicated that they would elect not to use the bolted procedure.'' As indicated above, the final rule requires that the holes be used and the connections be made by field bolting unless constructibility does not allow.

In the second major group of comments, commenters claimed that bolting is more dangerous than welding because: (1) Erectors will install erection bolts and then replace them with high strength bolts. To do that the surface will have to be prepped in accordance with AISC. Or, if the designers require a final weld, the erector will have to come back to weld, doubling the connection time and increasing fall exposure. If high strength bolts are required for a final connection, the erector must handle extra tools, bolts, nuts, washers, etc. and prep the surface; (2) Unused holes will weaken the members. If an erector elects not to use the holes, the designer may require that the holes be filled since unfilled holes may be a deficiency; (3) The holes will have to be slotted, which does not provide the rigidity of a weld; and (4) Welding is easier than installing a bolt from the top and a nut from the bottom.

Addressing the first issue in this group, many commenters (41) raised a concern about the structural integrity of the bolted connection because the holes would have to be slotted or oversized. In particular, they argued that bolts used to meet the proposed paragraph would be erection bolts, which would have to be replaced with high strength bolts. This, they asserted, would require that the surface also be prepped in accordance with AISC requirements. One commenter (Ex. 13–357) claimed that if the designers require a final weld, the worker would have to come back to weld the connection, also doubling the connection time and increasing fall exposure. These re-connections would be necessary to provide lateral stability to the top flange of the supporting member. Another commenter (Ex. 13–342) stated:

> * * * the erection connection will not be the final connection. A final connection by welding or replacement of the erection bolts with high strength bolts will have to be provided. The bolted connection would require proper cleaning and preparation of the connecting surfaces, use of plate washers, and torqueing of the bolts.

Moreover, erectors would not install final high strength bolts during this erection phase due to the time to prep and install the bolts to AISC

specifications. A final bolted connection during this phase would be extremely expensive since the crane would be on site during the whole process. As indicated below, erectors want to get the joists up as quickly as possible to reduce the crane time on the job.

The Professional Engineers Group, Inc. (Ex. 13–110) responded that the ''[b]est case scenario is the erector uses erection bolts and then goes back to make a final connection, either bolted or welded. This places the erector's personnel in a position twice that can lead to an accident rather than once.'' A steel erector (Ex. 13–118) commented ''[t]he use of erection bolts is only a temporary attachment; a worker will still have to return to each location to ''complete'' the connection, resulting in an increased exposure.'' Further, this commenter stated ''* * * the net result of this proposed rule change will be increased costs, reduced market share, and increased worker exposure.'' A steel fabricator (Ex. 13–283) responded that their joist suppliers had advised them that ''* * * a bolted connection will very often not be acceptable for a final connection since more load may be present than can be transferred without additional welding.''

Four commenters (Exs. 13–6, 13–57, 13–89 and 13–277) suggested that if high strength bolts would be required for a final connection, the worker would have to handle extra tools, bolts, nuts, washers, etc. and as mentioned above, the surface would be required to be prepped prior to installing the bolts. These added activities would create additional hazards to the steel erector. One commenter, a General Contractor (Ex. 13–6), responded that the proposed paragraph (a)(8) would: increase the number of falling/dropped objects creating an overhead hazard; increase the possibility of pinching, crushing or cutting fingers, and; increase injuries due to the significant amount of time needed for the alignment process. These commenters claimed that the bolts will only serve as a temporary connection and that a rigid final connection will be required by either replacing the erection bolts with high strength bolts or welding the joist ends.

All of these concerns are addressed by the revision to paragraph (a)(8) in the final rule, which requires the use of bolts in the initial connection but is silent on the final connection. The bolted connection covered by paragraph (a)(8) serves as an initial erection connection, making the structure stable more quickly for the worker. In addition, the erection bolts would not need to be replaced by high strength bolts where the final connection is made by welding. If the employer elects to have the final rigid connection to be a bolted connection, the surface preparation would then be necessary. However, whether bolted or welded, the final rigid connection will be made from a deck or otherwise more stable structure. Thus, the employees performing the final connection will have lower exposure to collapse and falls.

The Agency believes that the total time involved by the worker in making a complete connection as required by this provision is actually less than making an initial and final welded connection. As discussed in more detail below, the erection bolt takes about 15 seconds to install. The welder will not be exposed to the hazards of welding on or at an unstable connection or sites because the joists will be stable at the point they are connected to the primary structure with these bolts. As Mr. Cushing testified, (Ex. 208X; p. 399) when performing the final weld, ''[Y]ou would weld in production mode. You wouldn't be welding and tying up the crane.'' Since much of the testimony against this provision was economic in nature, OSHA recognizes that freeing the crane up sooner would result in a cost savings.

The contention that the worker would have to do the connection twice—once to initially install an erection bolt and again to replace it with a permanent, high-strength bolt (or weld the joint)—is based on two assumptions: first, that the initial bolts would be erection bolts, and second, that the need for slotted holes to make the initial connection may require a final rigid connection to replace the erection connection, thus requiring workers to visit the connection twice. As explained below, this provision does not create the need for an additional visit to the connection since this is already necessary when initial welded connections are used.

OSHA notes, however, that the Steel Joist Institute Technical Digest No. 9 currently recommends that ''Immediately after each subsequent joist is set in its proper position, one side of the joist bearing seat on each end of the joist should be tack welded.'' The Technical Digest further recommends that ''After all of the bridging is installed, the final welds are made on the bearing seats of the joists.'' Thus, the SJI recommendations already require two visits to the joist end attachments.

Under current practices, where welding is used for the attachment of joists, the worker welds one end of the joist, installs bridging which helps to straighten out the joist, and then welds the other end. Normally, both sides of one end or alternate sides of both ends are attached to the primary member with a weld smaller than the final weld required in § 1926.757(b). This smaller weld is commonly referred to as a ''tack weld''. This allows the worker greater flexibility in pulling the sweep out of the joist while installing the erection bridging. Nevertheless, even when using welding to attach joists, a second visit to the initial attachment point must be made to make the final weld.

Some commenters (Ex. 13–6, 13–89, 13–97 and 13–191) stated that welding is easier and safer than bolting and that welding is currently the recommended method of attachment by the Steel Joist Institute. The Agency expects that this will continue to be the standard practice for joists in bays less than 40 feet, and the final rule does not require field bolting for these shorter joists. However, due to the inherent instability of joists over 40 feet and other considerations discussed above, final paragraph (a)(8) provides a safer environment to erect the longer joists. As discussed earlier, even if the joists are attached with erection bolts initially, the erector may make the final attachment by welding—but the connection work will then be performed from a more stable structure.

Addressing the second issue of this group, many commenters (see for example Ex. 13–97 and 13–228) were unsure whether the designers will require unused holes to be filled. This will not be a concern since in most cases the final rule requires that the holes be used unless constructibility does not allow. Commenters generally felt that the holes will either have to be filled or larger members used to account for the holes. If the holes require filling, the commenters suggest, there would be a significant burden on the erector. It is unclear how many erectors would choose to bolt joists if given the option. According to the Steel Erectors Association of America (SEAA) survey of their members (Ex. 29), most SEAA members would elect not to bolt. In that survey, however, 11 members did state that they felt this is a safe practice. Paragraph (a)(8) of the final rule requires that holes be provided for field bolting, and that for the initial connection of these joists be performed by field bolting, with a very limited exception. The Agency agrees that it would be inappropriate to require the holes be provided and not require that they be used.

As mentioned above, many commenters stated, if it were an option, that erectors would elect not to use the optional holes as proposed for connection of the joists. This led to commenters concerns as to whether the

unused bolting holes would weaken the structural member and whether the erector would need to fill them. Four commenters responded directly to this issue (Exs. 13–97, 13–153, 13–228, and 13–261). SteelFab (Exs. 13–97 and 13–261) stated ''[o]wners and even designers may not know whether these open holes are a structural deficiency.'' On the other hand, a commenter (Ex. 13–228) feels strongly that ''* * * the architect will most certainly require erectors to plug the unfilled holes, again resulting in increased exposure of the erectors.'' In addition, HABCO (Ex. 13–153) suggested ''[t]here is a huge design penalty for open holes in a girder top chord versus holes containing bolts.'' and ''[t]his, in turn, will require the erector to either drag an air hose to each end of each joist, or a torque wrench.'' This commenter went on to state that the girder size would have to be increased if there are holes in the member that might not get filled, leading to an associated cost increase of approximately 25%. ''Therefore, if the designer is required to design holes into the girder top chords, and if the fabricator is required to furnish holes, the erector *must* be required to fill them with properly sized and torqued bolts.'' As already discussed, these concerns of unfilled holes are all addressed by bolting requirements in the final rule, requiring the holes to be used.

In addressing the third issue of this group, many commenters (Exs. 13–43 through 13–48, 13–54, 13–55, 13–56, 13–71, 13–77, 13–152, 13–217, 13–256, 13–265, 13–266, 13–355) responded that the holes required by proposed paragraph (a)(8) would need to be slotted (or oversized) and that slotted holes would not provide the necessary rigidity that a weld does. EMC Structural Engineers (Exs. 13–43 through 13–48) noted that to allow for field tolerances as a result of the proposed provision ''* * * all bolt holes will not be simple round holes but instead will be slotted holes which will allow the sweep to remain in the joist.'' Another commenter (Ex. 13–217) stated that the requirement would require installing bolts and then having to weld the joist ''to freeze the connection'' as a result of using a slotted hole on the joist. In addition this commenter stated that using ''* * * proper amount of bridging as the joists are being set, and using an established safety procedure, we can set the joist safely without bolting each joist as they are set.'' Another commenter (13–335) responded that they:

> * * * have spoken with several joist manufacturers and they have indicated that in order to meet this proposed provision, they will have to pre-punch all joists with [slotted] holes. The slotted holes would be required for field adjustments/construction tolerances. This would create a significant problem from our (the Structural-Engineer-of-Record's) standpoint. With slotted holes placed in the joists for bolting, we would have to design the beams as laterally unsupported.

These commenters indicated that holes must be slotted to allow for field adjustments. They contended that since the joists are long and tend to curve somewhat, some room is needed to pull the joist into place; exact sized holes would not, in most cases, be workable, the holes would have to be slotted. This, in turn, would not allow the initial connection to serve as the final rigid connection, and most likely a final weld would be necessary. OSHA recognizes the validity of some of these concerns. The final provision contemplates that the initial bolted connections will, in fact, be temporary connections and that the joists will be stabilized with a final weld or high strength bolt connection for the rigid connection. The required initial bolting is intended to increase employee safety during the initial placement and connection of the joists.

The fourth issue of this group was addressed by two commenters (Exs. 13–97 and 13–165) claiming that welding is easier than bolting. They suggested that welding is a faster and safer anchoring application for joists, and that it is easier to weld from the top than install a bolt from the top and a nut from the bottom. In contrast, Phil Cordova, SENRAC member and owner of a steel erection company, described the time it takes to weld versus bolting the joist (Ex. 208X; p. 199). When asked how long it takes to tack a joist initially, Mr. Cordova stated:

> You have many considerations that take place there. You need to get the endow of a joist. You need to find the proper location. You need to get a man up there who is in a secure position to work without vision of the ground by working under a welding hood to tack this. A tack could take quite a significant amount of time. Meaning, by the time they get set up in position, it could be five to ten minutes on each tack.

Further, Mr. Cordova described the time it would take to put in an erection bolt and tighten it by stating:

> That would just be a few seconds. Quite significantly, under a minute. We are talking, by the time you thread the bolt down through the hole and put the nut on it, an ironworker could put each nut and bolt on there on the magnitude of about 10 to 15 seconds—I would think.

In the final analysis, the issue is, whether an initial joist attachment with erection bolts provides greater stability and exposes the employee to less risk of falls or collapse than an initial joist attachment with tack welds. OSHA believes that it does. OSHA believes the bolting requirements of this paragraph will reduce both fall and collapse hazards.

The third major group of comments on this paragraph addressed costs, fabrication burden, and feasibility issues.

Some commenters felt that the bolting provision was unnecessary since the other requirements in § 1926.757 adequately addressed the activities and procedures that cause the accidents in joist erection. According to the commenters, joist collapses are most often associated with inadequate bridging and placing a construction load on unstable, un-bridged joists. One commenter (Ex. 13–40) stated:

> * * * all joists are bolted adjacent to the column in each bay [currently required by § 1926.751(c)(1) and proposed as § 1926.757(a)(1)]. This, along with the recent requirement for joists of 40 feet and longer to have bolted bridging in place before slackening the hoisting lines [proposed § 1926.757(d)(1)], and not permitting the application of any loads to the joist until the bridging is installed [proposed § 1926.757(e)(2)], provide a safe erection procedure. I am not aware of any instances where, when these procedures were followed, there has been an accident that additional bolting of the ends of the joists would have prevented. All of the accidents are a result of direct violations of these requirements.

Another commenter, the USCCG (Ex. 63), suggested that:

> [a]ny possible safety concerns addressed by this paragraph are better addressed by the other joist provisions dealing with installation and anchorage of bridging, keeping the hoisting cable in place until one end is attached, stabilization of the structure prior to installing joists, among other provisions * * * The causes of joist collapse are addressed by the other provisions of [proposed § 1926.757].

The Steel Joist Institute (Ex. 66) agreed that other provisions in proposed § 1926.757 addressed joist erection hazards and stated:

> [t]he holes for bolting are not required to prevent unintentional displacement as the proposed rule contains a multitude of other provisions that address this concern. Specifically, paragraphs (a)(2), (a)(6), (a)(7), (b)(3) and (c)(1)[referring to paragraphs of proposed § 1926.757] * * *

The Agency agrees that the proposed requirements for landing and placing joists, structure stabilization prior to joist erection, and attachment requirements contained in paragraphs (b)(3) and (c)(1) address many of the hazards identified as causing many

accidents in joist erection. However, the hazard addressed by paragraph (a)(8) is uniquely associated with long, limber joists and is not adequately addressed in these other provisions of the standard.

Several concerns were raised by commenters about the feasibility of bolting. Specifically, the preamble of the proposed rule stated that prior to sizing a structural member for supporting mechanical equipment, the structural engineer of record or design engineer must know the exact operating weight and physical footprint of the equipment that will be imposed onto the structure. This type of information is critical in the sizing of the foundations and the primary and secondary structural members (63 FR 43473). Their concern was that if the size of the equipment is not known prior to fabrication of the steel members, joists may need to be moved to accommodate the equipment during erection. In that situation, the bolt holes would be in the wrong place and another means of attachment would have to be used. Seven commenters responded to the issue of location and size of mechanical equipment. Two commenters (Ex. 13–294 and 13–308) stated ''[t]he structural engineer does not need the exact size, weight or location of equipment to properly size the members. Approximate weights and dimensions are sufficient for design.'' Another commenter (Ex. 13–184) responded that:

> * * * The supporting member of [the] joist can be drawn & fabricated without knowing the exact location of [the] bar joist since the joist is field welded to the supporting member. Delays in fabrication and shipping of these supporting members will become commonplace. Coordination will become a nightmare.

In a post hearing comment (Ex. 52), the National Council of Structural Engineers Associations (NCSEA), commented that ''[l]ocation of services and equipment are often not finalized until erection of the steel frame is well underway, or perhaps even complete.'' Another commenter (Ex. 13–64) responded that ''[t]he welded detail allows for joist spacing to be revised to suit mechanical coordination up until installation. In today's fast track projects, this flexibility is demanded.'' The SJI, in a post hearing comment (Ex. 66) added that:

> [t]he most pernicious cost-factor will be the interruption of scheduled work in the fabricator shop to await the final positioning of heating, air conditioning and other mechanical equipment. [further] * * * the design, fabrication and manufacture of structural steel and steel joists is on a just-in-time basis. To hold everything in abeyance until the mechanical equipment is decided upon, purchased and available will frustrate the whole construction sequence and drive up the carrying costs of steel construction.

In addition, commenters raised several general feasibility concerns about the hole requirement in paragraph (a)(8). They stated that it would be difficult to line the holes up (Ex. 13–233), the reality of construction would not allow the procedure to be effective (Ex. 13–278), and since that the joist manufacturer and steel fabricator are most often separate businesses, the coordination of precise hole locations would not be easy (Ex. 13–226). The American Institute of Steel Construction (AISC) (Ex. 13–209) addressed the coordination concern by stating:

> [t]o allow for bolting on every job, the fabricator and the joist manufacturer must know the exact joist spacing to prepare shop drawings of the individual members for approval and fabrication. This presents a severe logistical problem since contractors commonly purchase steel well in advance of the building's mechanical system * * * [s]afe, existing practice allows the fabricator to order joists and mill steel (long lead-time items) prior to finalization of all other elements of the project design. The proposed requirement would not allow for field adjustment of the joists if exact hole location is required. In addition, if the final location of the joists is not known during the fabrication, how will the fabricator know where to put the holes and if the location changes, as it often does, there is no means to move the holes? In addition, field adjustability is not possible with bolted hole connections causing problems for mechanical equipment of which the location may not be known prior to fabrication.

OSHA agrees that there is a need to allow for situations where field adjustment is needed. Paragraph (a)(8)(ii) of the final rule allows for immediate welding of the joist and also for movement of the joist where constructibility does not allow for bolting. In these instances, where a joist would need to be moved to allow for the placement of mechanical equipment or if the joist location had to change after fabrication and prior to erection, a weld would be permitted to secure the joist if it is necessary for the joist to be positioned such that the holes cannot be used. In addition, as stated in the preamble to the proposed rule, the Agency hopes this will create better pre-job communication between the fabricator and erector. Furthermore, OSHA notes that all solid-web member construction requires precise hole alignment. Therefore, the Agency feels that if solid web structural steel can be fabricated with precise hole alignment for multi-story sky scrapers, sports stadiums and other large structures, then the same can be done for open web steel joist structures.

Another concern was that the proposed provision would unnecessarily increase the hazards to fabrication workers to put the holes in the members. Vulcraft (Ex. 13–289) stated:

> * * * the cost to people ordering these products will increase due to the additional, unnecessary fabrication requirements, this will increase the safety and health risk of the fabrication workers and this risk is much greater than the non-risk of welding the ends of joists in the field.''

Another commenter (Ex. 13–25) stated ''[f]abricators will drill millions of holes for no reason; [there is] no justification for exposing shop fabricators to additional hazards.'' Several commenters (Exs. 13–41, 13–234, 13–290, 13–165, 13–14, 13–144, 13–22, 13–42, 13–309, 13–226, 13–51 and 13–209) further suggested that the requirement would place additional burdens on the fabricator, primarily a cost burden. The American Institute of Steel Construction (AISC) (Ex. 13–209) stated that the requirement ''* * * imposes tremendous economic, manufacturing, scheduling, detailing and other burdens on both the structural steel fabricator and the steel joist manufacturer to install bolt holes to accommodate an erection method that will be merely optional.'' Another commenter (Ex. 13–42) stated ''* * * the passing of this final rule would, in some cases[,] probably double the cost of detailing beams that would support bolted connections for joists 40 feet or [over].''

Another concern of the fabrication industry involved small fabricators and their inability to compete with the larger fabricators to drill or punch holes in the members. One commenter (Ex. 13–22), referring to the proposed provision, stated ''[t]his would put an unnecessary, and unfair burden on small fabricators who do not have computerized drilling and/or punching lines by greatly increasing the cost of labor.'' Another commenter (Ex. 13–12) again referring to proposed paragraph (a)(8), stated that if the rule were adopted, he would be forced to close his business. Because he has a small shop and all holes are drilled by hand, he said that he would not be able to compete with larger shops that have automated equipment.

The Agency believes that paragraph (a)(8) will increase safety for those workers installing larger joists. The record does not demonstrate that the provision will increase exposure to hazards in the fabrication industry. In addition, since the final rule requires that the holes be used for erection of the

joists, the fabricator will not be needlessly drilling the holes.

Finally, many commenters suggested that the proposed requirement would increase the cost of joist erection without increasing employee safety. Without any identified increase in safety, many commenters felt that the increase in costs to the steel joist industry and the structural steel fabrication industry is unjustified. One commenter (Ex. 13–252) noted ''* * * adding 10 to 15 percent for additional labor and materials will only serve to push these jobs out of the reach of many small businesses.'' Additionally, SJI in a post hearing comment (Ex. 66) presented an economic analysis of the impact of this proposal on the steel joist industry that showed a first year cost of $68,000,000 for this provision. They also noted that structural steel fabricators anticipate an increase in cost of $126 per ton if the proposed regulation is implemented. That amounts to an increase cost for fabricated structural steel of $184.8 million, above the costs to the joist industry. Another commenter (Ex. 13–342) responded ''the cost of steel projects will increase significantly with little, if any, advantage in job site safety. Cost increases will result because of the joist girder top chord or beam top flange will have to be increased in size and holes will have to be punched in every joist seat. Erection cost increases will also result in making the final connection.''

One commenter (Ex. 13–57) responded that their company has never had a worker injured during the process of welding joist ends to structural steel beams, and that the proposed change to paragraph (a)(8) would neither improve safety nor stability, might require increased beam sizes and might create a tripping hazard. Another commenter (Ex. 13–89) stated that the proposed paragraph would not provide any safety benefit and could increase accidents due to the efforts to bolt the ends of non-rigid joists which would require a difficult balancing act to perform. Other commenters expressed concern that proposed paragraph (a)(8) could be detrimental to the steel joist industry. Specifically, the added costs for engineering, coordination, fabrication and erection will make this type of construction non-competitive.

As indicated above, paragraph (a)(8) only applies to long and limber joists (40 feet or more in length) to ensure that at the critical time of initial connection, the employee is not exposed to a hazard as a result of the joist not being adequately secured upon its placement. The Agency believes that the costs (addressed in the economic analysis) of this provision will be accompanied by an significant increase in safety. In addition, as was discussed earlier, there may be a cost savings in erection time by performing the bolted connection. SENRAC member Alan Simmons of the Ironworkers International Union, and an ironworker with much field experience, stated at the hearing (Ex. 208X, p. 189), ''It takes considerably less time to bolt than to weld a joist in my opinion.'' In addition, Mike Cushing, an ironworker for 29 years, described in testimony (Ex. 208X; p. 377) how bolting is easier, faster and safer than welding. ''With welding, there is no right spot, you have to pull a tape, get drums out and determine the exact location of the joist to weld it. With holes, you just stick the bolt in the hole just like any other piece of iron.'' He goes on to state that ''* * * welding is not a very long process, but laying it [the connection point of the joists] out, it probably will take longer than to do the actual welding.'' Also, Steve Rank (Ex. 208X; p. 204), a SENRAC member and an ironworker with much field experience, stated that these long joists pose a displacement hazard as well as a hazard to the ironworkers that are stepping onto and dragging welding weight over them. He states that alignment is a serious issue, and that such long joists can pop the welds and lead to accidents during erection.

In summary, most of the concerns expressed about the proposed requirements for the holes for bolting long steel joists are eliminated by final § 1926.757(a)(8) which does not just require that holes be provided for field bolting: it also requires that initial connections be field bolted instead of welded. In addition, many of the remaining concerns are eliminated by the constructibility exceptions.

In the proposed rule, OSHA justified the need for the holes in the joists for the following reasons: (1) The provision is necessary because certain joists that are thin and flexible can be difficult to install because of their sweep. Bolting these types of joists first allows straightening of the joist, thus returning its camber and eliminating torque. Additionally, after bolting, welding can be more easily accomplished. (2) Long steel joists that are placed in bays of 40 feet or more have a greater tendency to twist or rotate, which creates hazards for the workers installing them. (3) Bolting is safer whenever unattached joists could be displaced by wind or construction activity, by the movement of employees, by trailing welding leads, by accidental impact against the supporting structure by a crane or other equipment, or by harmonic motion or vibration. (4) The vision and balance of an employee working at elevation can be impaired while wearing a welding hood, which may make bolting a safer approach in this situation. (5) Joists can roll and pop welds due to the movement of an worker on the joist or the stresses caused by removing the sweep; if the weld breaks, the joist fails and may cause a structural collapse.

The Agency believes that a bolted erection connection in joists in bays of 40 feet or more will reduce the risk of an employee fall or collapse that can result when a long, unstable steel joist breaks loose from its attachment. Slotted holes for bolting will provide easier plumbing-up and alignment before the final rigid attachment is completed. Sweep can be taken out and the bridging installed without fear that the seat will break off. When asked for his sense of the cost savings to a steel erector, Mr. Cordova, who has used bolted connections in steel joists, stated (Ex. 208X; p. 211):

> I think it is a significant saving in that they can protect their workers by minimizing the exposure of the worker out there on the structure that's unstable. If you have a bolted slotted connection, you can stabilize the structure.

Bolted connections help protect employees from falling. Barry Cole of Miller Safety (Ex. 208X; p. 252) stated: ''Whenever we can give a guy a better grip, a better handling, or a better way mechanically with some certainty and some instantaneous versus long, drawn out, [sic] then you're better off.'' Mr. Cole went on to describe bolted connections as a type of fall protection ''[b]ecause they reduce exposure to a loss of balance * * *'' In the Summary of the Final Economic and Regulatory Flexibility Analysis (Section V), below, OSHA addresses the issue of cost impact to steel joist fabricators.

SENRAC determined, and OSHA concurs, that bolting of longer joists for their initial connection will provide additional stability during this unstable erection period.

Paragraph (a)(9) of the final rule (proposed paragraph (a)(10)) prohibits the use of steel joists and steel joist girders as anchorage points for a fall arrest system unless written direction allowing such use is obtained from a qualified person. Although performance criteria and manufacturer's specifications are not currently available regarding the adequacy of steel joists and steel joist girders as anchorages for fall protection systems, this provision recognizes that some joists and girders may be strong enough to meet the load

requirements for anchorages in § 1926.760. One commenter (Ex. 13–210) suggested that the structural engineer of record should be the one to provide the approval. OSHA believes the SER may not have the knowledge of steel joist erection necessary to approve tie-off to joists. The qualified person, however, as defined is the appropriate entity to make the determination.

Paragraph (a)(10) of the final rule (proposed paragraph (a)(9)) addresses the hazard posed by bridging joists without establishing an adequate terminus point for the bridging. Bridging is not effective until a terminus point is created. ''Bridging,'' an operation integral to steel joist construction, refers to the steel elements that are attached between the joists (from joist to joist) to provide stability. ''Erection bridging'' is defined as ''* * * the bolted diagonal bridging that is required to be installed prior to releasing the hoisting cables from the steel joists.'' ''Horizontal bridging,'' usually angle iron, is attached between steel joists, to the top and bottom chords of each joist, by welding. There are several provisions in this section that require bridging to be anchored. This means, by definition, that the steel joist bridging must be connected to a bridging terminus point. The term, ''bridging terminus point,'' is defined as follows:

> Bridging terminus point means a wall, beam, tandem joists (with all bridging installed and a horizontal truss in the plane of the top chord) or other element at an end or intermediate point(s) of a line of bridging that provides an anchor point for the steel joist bridging.

Final rule paragraph (a)(10) simply requires that a terminus point be established prior to installing the bridging in order for the bridging to be anchored. OSHA is aware that steel erection is a progressive process that requires one piece to be erected before the subsequent piece can be attached to it. This provision requires pre-planning to determine the particular location of the terminus point for the attachment of bridging. To assist in developing or determining terminus points, OSHA is providing illustrative drawings of examples of bridging terminus points in non-mandatory Appendix C. In addition, paragraph (c)(5) of this section, discussed below, deals with the situation in an erection sequence where the permanent bridging terminus points are not yet in existence at the time the joists and bridging are erected. This provision remains the same as the proposed rule and no comments were received on this paragraph.

Paragraph (b) Attachment of Steel Joists and Joist Girders

There are three types of joists identified by SJI as being used in the steel erection industry. The K-Series open web steel joists, having joist depths from 8 inches through 30 inches, are primarily used to provide structural support for floors and roofs of buildings. Although light in weight, they possess a high strength to weight ratio (Ex. 9–141). The LH-Series steel joists span up to and including 96 feet. These joists are used for the direct support of floor or roof slabs or decks between walls, beams, and main structural members, and their depths range from 18 inches to 48 inches. The ''Deep Longspan,'' or DLH-Series joists can run up to 144 feet and have depths from 52 inches through 72 inches. The attachment of all three series of joists is addressed in paragraph (b) of this section. The hazard addressed in this paragraph is the adequacy of the attachment of joists that could affect the stability of the joist and thus the safety of the employee erecting the joist. Paragraphs (b)(1) and (b)(2) specify the minimum attachment specifications for the lighter and the heavier joists, respectively. At a minimum, the K-Series must be attached with either two ⅛″ (3 mm) fillet welds 1 inch (25 mm) long, or with two ½″ (13 mm) bolts. In addition, the provision provides alternative performance language ''or the equivalent'' to allow for attachment by any another means that provides at least equivalent connection strength. Similarly, at a minimum, the LH-Series and DLH-Series must be attached with either two ¼″ (6 mm) fillet welds 2 inches (51 mm) long, or with two ¾″ (19 mm) bolts. Again, OSHA is providing performance language, ''or the equivalent,'' for the reasons discussed above. Paragraphs (b)(1) and (b)(2) were adopted from SJI specifications. One commenter (Ex. 13–208 commented on these paragraphs in support stating that these provisions have ''* * * been adopted from the Steel Joist Institute Specifications and emphasize the need for positive attachment of joists to [their] supporting elements.'' Final paragraphs (b)(1) and (b)(2) remain unchanged from the proposed rule.

Paragraph (b)(3) of the final rule addresses the hazards associated with the following improper erection sequence: landing joists on the support structure; spreading them out unattached to their final position; and then attaching them. This procedure creates the potential for worker injury because joists handled in this manner may fall or the structure may collapse. To eliminate these hazards, this paragraph requires, with one exception discussed in paragraph (b)(4) below, that each steel joist be attached, at least at one end on both sides of the seat, immediately upon placement in its final erection position, before any additional joists are placed. The language, ''both sides of the seat'', is added in the final rule to clarify what OSHA means by attachment. One comment was received on this provision (Ex. 13–208). It supported the requirement, stating that ''[t]his is a good provision that establishes the need to secure joists as they are placed thus preventing inadvertent displacement.''

Paragraph (b)(4) is an exception to the paragraph (b)(3) ''attachment upon final placement'' requirement. It addresses the situation where steel joists have been pre-assembled into panels prior to placement on the support structure. One commenter (Ex. 13–308) stated that in applying the proposed provision, one might confuse the corners of the panels with the steel joists creating the panels. The Agency agrees that the proposed language could cause confusion, and that we need to clarify that it is the corners of the panel that must be attached to the structure. Final rule paragraph (b)(4) has been re-worded to require that panels that have been pre-assembled from steel joists with bridging must be attached to the structure at each corner before the hoisting cables are released.

Pre-assembly of panels usually involves the installation of diagonal and horizontal bridging to form a platform at ground level, which eliminates fall hazards associated with attaching bridging at elevated work stations. Placing joists on the support structure in this manner eliminates the single joist instability concerns. Furthermore, because of the inherent stability of these pre-assembled panels, this paragraph requires only that the four corners of the panel be attached to the support structure before releasing the hoisting cables. The attachment can be either bolted or welded.

An additional benefit of panelizing joists is that, following installation on the primary support structure, in all likelihood, the panel will immediately provide anchorage points for fall protection systems.

Additionally, the pre-assembly allows for alternative joist erection methods such as a hybrid form of steel erection involving steel/wood-panelized roof structures, where wooden decking (dimensional wood and plywood) is attached to a single steel joist and the resulting panels are set on the support structure (Exs. 9–94, 9–95). Again, by placing joists on the support structure in

this manner, the instability concerns and other hazards associated with attaching single joists are avoided. The same commenter (Ex. 13–208) supported this provision by stating ''[t]his is a strong provision that extends the requirement for attachment even in instances when the erector chooses to panelize joists for erection.''

Paragraph (c) Erection of steel joists. Paragraph (c)(1) of the final rule requires that for joists that require bridging as provided in Tables A and B, at least one end of each steel joist must be attached on both sides of the seat to the support structure before the hoisting cables can be released. This paragraph is nearly identical to the proposed paragraph (c)(1) except that it was clarified by adding ''on both sides of the seat'' so that it is understood that two attachments are required at the one end of the joist. Thus, an end attachment is considered to be attachment of both sides of the joist seat. This change is consistent with the change in paragraph (b)(3) above. For further clarification, to address an oversight in the proposed standard and to conform with SJI specifications, this provision has been limited to the joists that require bridging as identified in Table A or B. This clarification will allow smaller lighter joists (that do not require bridging and can be landed in bundles) to be placed on the structure and spread out by hand. Once the joists have been placed in their final position, however, they must be attached in accordance with paragraph (b)(3) of this section.

The Agency also determined that paragraph (c) did not properly address the erection of heavy joists over 60 feet. Therefore, final rule paragraph (c)(2) has been added to address the special erection needs of these long heavy joists to conform with SJI specifications. This paragraph will require that the seat on both ends of the joist be attached permanently and the bridging requirements of paragraph (d) met before hoisting cables can be released. The SJI (Ex. 13–208) commented that it is necessary to require that the joists be secured at least at one end prior to allowing workers on the joists.

Paragraph (c)(3) of the final rule (proposed paragraph (c)(2)) addresses steel joists that do not require erection bridging as required by Tables A and B. This paragraph has been revised to eliminate the reference to joists that span 40 feet or less. This was done to be consistent with paragraph (d) of this section as discussed below.

In the last 25 years, many new and different open web steel joists have been manufactured. In developing Tables A and B, SJI demonstrated that there are dozens of joists that span less than 40 feet that require erection bridging to maintain stability during erection. SJI also demonstrated that there are joists over 40 feet that do not need such bridging. The Agency has accepted these findings and is following SJI recommendations with respect to which joists need erection bridging. SJI (Ex. 13–208) commented in support of the provision allowing only one worker on the joists that do not need bridging ''* * * prior to the joist being secured and the bridging being installed and anchored.''

Based on the recognition of the inherent danger of employees working on unstable joists, paragraph (c)(4) of the final rule (proposed paragraph (c)(3)) requires that no employee be allowed on steel joists, where the span is equal to or greater than the span shown in Table A or B, unless the requirements of paragraph (d) of this section are met. This paragraph has also been modified in the final rule as a result of the changes to paragraph (d). Since the 40 foot minimum length has been eliminated, this paragraph now prohibits workers from going out on any joist that is equal to or longer than the span specified for that joist in Table A or B unless the bridging provisions of paragraph (d) of this section are met. The SJI (Ex. 13–208) commented in support of this requirement.

Paragraph (c)(5) of the final rule (proposed paragraph (c)(4)) addresses the situation where the erection sequence calls for joists to be erected before the permanent bridging terminus points have been established. This situation commonly occurs in a single story structure that has masonry or architectural precast walls installed after the steel is partially or fully erected. Complying with paragraph (c)(5) will involve pre-planning and the addition of temporary bridging terminus points to provide stability and prevent structure collapse in this situation. Examples of bridging terminus points can be found in Appendix C. SJI (Ex. 13–208) commented in support of this provision by stating ''[t]his provision recognizes situations when it is simply not possible to terminate or anchor bridging utilizing standard procedures. In those situations it is imperative that provisions be made to provide the necessary stability.''

Paragraph (d) Erection Bridging

Paragraph (d) of the final rule provides that, where the span of the steel joist is equal to or greater than the span shown in Tables A and B, a row of bolted diagonal erection bridging must be installed near the midspan of the joist, the bolted diagonal erection bridging must be installed and anchored before the hoisting cables can be released, and no more than one employee is allowed on the joist until all other bridging (diagonal and horizontal bridging) is installed and anchored.

Final rule paragraph (d) has been revised from the proposed rule by eliminating the requirement that all joists in bays of 40 through 60 feet (in addition to those equal to or greater to the spans in Table A and B) have bridging. Under the final rule, the requirements of paragraph (d)(1) apply only to the joists identified in the Tables as needing bridging.

Under the current standard, joists less than 40 feet long do not require bridging, but all joists 40 feet and over do. The proposed rule was somewhat different. Like the current standard, bridging would have been required when erecting any joist 40 feet or longer. Unlike the current standard, however, bridging would also have been required when erecting those joists less than 40 feet long that are identified in Tables A or B as requiring that procedure.

Tables A and B rate the stability (when unbraced) of a wide range of joists—including joists 40 feet and over. According to the Tables, a number of steel joists over 40 foot are stable without bridging. Nonetheless, the proposed rule would have required bridging for all joists over 40 feet in length.

Tables A and B were developed for the proposed rule and were based on the SJI tables. The SJI tables were developed in 1994 and designed to rate the capacity of joists with respect to a uniform dead load (an unmoving weight resting on the joist) and live loading (for example, a person walking on a completed roof). SJI developed the tables to determine which joists could support, without bridging, a static 300 pound load placed on the top cord at the mid-span of the joist.

SJI retained a consultant to develop and check their tables for a single point loading in the center of the joists. The consultant first developed a theoretical equation to evaluate the joists, and rated the joists. The joists were then field tested for a stationary point loading. The testing corroborated the theoretical ratings. SJI provided this information to SENRAC and the information was used in the development of Tables A and B in the proposal. The Tables relate the attachment and bridging requirements to the actual performance of particular joists.

SENRAC decided to use the portion of the tables that identified the need for

bridging of joists less than 40 feet in the proposed rule. The proposal required bridging for all joists over 40 feet, although the SJI tables indicated that certain joists with spans from 40 to 60 feet do not require erection bridging. SENRAC based its decision on the following: (1) OSHA's current steel erection standard requires all joists over 40 feet to be braced, and (2) the SJI tables are not reliable because the loads imposed during the SJI tests were static loads; the loads imposed by an employee are dynamic.

There were a number of commenters that objected to the failure of the proposal to use the Steel Joist Institute (SJI) Tables in their entirety. The Steel Erectors Association of America (SEAA) (Ex. 13–203) stated that it could not understand why only half of SJI's stabilization tables was used. In its view, if the testing is valid the testing should be accepted in its entirety or not used at all.

Another commenter, Mr. Eddie Williams (Ex. 203X; p. 171), testified that 40 feet is not necessarily an appropriate threshold for the requirement—there may be joists that are 30 feet that need a row of x-bridging in the center while others are stable well over 40 feet without bridging. Speaking as an erector, he believes that it is acceptable to rely on the SJI tables above 40 feet. Mr. Cary Andrews (Ex. 204X; p. 133) and Mr. Studebaker (Ex. 204X; p. 33) in similar statements said that 40 feet should not be a threshold. They stated that the requirement for bolted x-bridging should be based on the stability of the particular joist.

SJI (Ex. 13–208) stated that it strongly objects to the imposition of the 40 foot rule for erection bridging. It reports that extensive SJI research has proven that many joists over 40 feet exhibit a sufficient degree of stiffness to allow for safe erection without erection bridging. SJI submitted the tables based on their research. In SJI's view, the choice of a 40-foot span as the point at which erection bridging must be used is arbitrary.

A commenter, (Ex. 201X; p. 79 and Ex. 13–334), questioned the Agency's authority to regulate the design of structures. They believe that this is a matter that should not be regulated. Another commenter, Mr. Emile Troup, from the National Council of Structural Association (Ex. 13–308), said that: (1) joists listed in Tables A and B are susceptible to instability without external support; and (2) proposed rule paragraphs 1926.757(c) and (d) are cumbersome. Mr. Troup believes that the paragraphs should be simplified to make it easier for structural engineers, joist manufacturers and erectors to understand the requirements. Mr. Studebaker, (Ex. 204X; p. 141) challenged the reliability of the SENRAC tables. The results reflected in the tables are based on static load testing. He argues that this is improper since the loads actually imposed during erection are dynamic loads, such as when an ironworker leans to install bridging. Ironworkers move across the joist and move back off of it and try to balance and stabilize themselves. In his view, the 300 pounds is a safe limit but it could be increased sightly.

In support of the proposal, Mr. Lott (Ex. 204X; p. 100) said that the lack of bridging could cause buckling failure. As the ironworker moves toward the center, the compressive force in the top chord is increased. If there is a failure, the member will fail in compression. Mr. Williams (Ex. 204X; p. 95) supported requiring bridging in joists over 40 feet.

As discussed earlier, OSHA believes that it is as necessary and appropriate at times to require building components to meet the safety needs of those constructing a building as it is to require a completed structure to meet the safety needs of its occupants. A well established principle of occupational safety and health is that eliminating or reducing a hazard by modifying the design of whatever is posing the hazard is preferable to relying exclusively on controlling a hazard through personal protective equipment.

An open web joist is light and has a high degree of strength along one axis—its height. In other words, once in place, it can resist loads placed along its top edge. However, the joist is extremely weak along the secondary axis—for a truss in place, this means that it has little capacity to resist a force pressing against the (wide) side of the truss. In its 1994 presentation before SENRAC, SJI addressed the research on stability that it used to develop its tables was addressed. The research showed that many joists over 40 feet exhibit sufficient stiffness for safe erection without erection bridging.

In response to the concern that the dead loading tests were insufficient, the Agency's engineers evaluated the tests and methodology used to develop the tables. The Agency's engineers estimate that for a 200 pound worker with 50 pounds of equipment, an additional 50 pounds of live loading will provide a safety factor of 1.2. In their opinion a test with a larger static loading is not needed and this is an appropriate safety factor for this type of situation. Consequently, the Agency believes that the SJI tables that were originally submitted by SJI are reasonable. SJI's research demonstrated that the joists over 40 feet identified in the Table as not needing erection bridging during erection are sufficiently stable. In addition, the record lacks evidence showing that the tables are unreliable. In sum, the record does not show a basis for cutting off the SJI Tables at 40 feet. OSHA has therefore incorporated the SJI tables in their entirety in the final rule and modified the proposal's provisions accordingly.

Paragraph (d)(1)(i) of the final rule requires that bolted diagonal erection bridging be installed near the midspan of the joist. In the proposed rule, the provision stated simply that this row of erection bridging had to be bolted diagonal bridging, but there was no requirement to install the bridging. This provision was clarified in the final rule by requiring that the bolted diagonal erection bridging be installed near the midpoint of the joist.

Paragraph (d)(1)(ii) prohibits releasing the hoisting cables until the bolted diagonal erection bridging is installed and anchored. As proposed, the provision did not require the bridging to be anchored. One commenter (Ex.13–208) suggested that the wording ''and anchored'' be added because bridging does not perform its function unless it is anchored. He pointed out that paragraph (a)(9) of this section requires that a bridging terminus point be established before bridging is installed (it refers to Appendix C, which provides examples of bridging terminus points). That suggests that, in the proposal, the intent was for the bridging to be anchored.

OSHA agrees that, to be effective, the bridging must be anchored, and has added this anchoring requirement to clarify that in order to comply with this paragraph and paragraph (a)(9) of this section, the bridging must be anchored.

Paragraph (d)(1)(iii) prohibits more than one employee from being on the joist until all the bridging is installed. This provision will require that all bridging that is required for the joist (both bolted diagonal and horizontal bridging) be installed before additional employees are allowed on the joist. No comments were received on this provision, and it is promulgated without change.

Paragraph (d)(2) addresses the bridging requirements for steel joists over 60 feet through 100 feet. Paragraph (d)(2)(i) has been added to the final rule. It requires that all rows of bridging for these spans be bolted diagonal bridging. This provision was added in response to a comment from SJI (Ex. 13–208) in which they stated that for these longer

joists, bolted diagonal bridging provides necessary stability for the joist. The Agency's addition of this requirement reflects the current best practice in the industry.

Paragraph (d)(2)(ii) of the final rule requires that two rows of bolted diagonal erection bridging be installed at the third points of the joists that span 60 through 100 feet in length. An explicit requirement that the bridging be installed has been added, as explained above with respect to paragraph (d)(1)(i).

Paragraph (d)(2)(iii) of the final rule (proposed paragraph (d)(2)(ii)) prohibits the hoisting cables from being released until these two rows of erection bridging are installed and anchored. The phrase ''and anchored'' was added for the reasons discussed with respect to paragraph (d)(1)(ii) above.

Paragraph (d)(2)(iv) of the final rule (proposed paragraph (d)(2)(iii)) requires that no more than two employees be allowed on a span until all other bridging is installed and anchored. The phrase ''and anchored'' has been added for the reasons discussed with respect to paragraph (d)(1)(ii) above. This paragraph provides that all the bolted diagonal bridging that is required for the joist must be installed and anchored (to a bridging terminus point) before more than two employees are allowed on the joist.

Paragraph (d)(3) applies to steel joists where the span is between 100 feet through 144 feet. Paragraph (d)(3)(i) requires bolted diagonal bridging for all rows of bridging. The Agency received no comments on this provision and it is unchanged in the final rule. Paragraph (d)(3)(ii) prohibits the hoisting cables to be released until all bridging is installed and anchored. There were no specific comments on the proposed provision. However, as explained above, the words ''and anchored'' have been added for consistency.

Paragraph (d)(3)(iii) restricts access to no more than two employees until all bridging is installed and anchored. There were no specific comments on this provision. However, the words ''and anchored'' have been added as explained above.

Paragraph (d)(4) applies to steel members spanning over 144 feet and requires that erection of these members be in accordance with § 1926.756. The Agency received no comment on this provision and it is unchanged in the final rule.

Paragraph (d)(5) requires the installation of bridging before the release of hoisting cables on any steel joist specified in paragraphs (c)(2), (d)(1), (d)(2) and (d)(3). There were no specific comments on this provision. However, as explained above, the words ''and anchored'' have been added. The final rule paragraph requires that where any steel joist in paragraphs (c)(2) and (d)(1), (d)(2) and (d)(3) of this section is a bottom chord bearing joist, a row of bolted diagonal bridging shall be provided near the support(s). This bridging shall be installed and anchored before the hoisting cable(s) is released.

Paragraph (d)(6) specifies that when bolted diagonal erection bridging is required by this section, the erection drawings must indicate the bridging and the erection drawings shall be the exclusive indicator of the proper bridging placement. This is to eliminate any confusion that might arise where bridging placement is specified through other means; reliance is to be placed only on the erection drawings for this information. In addition, shop-installed bridging clips or functional equivalents must be provided where bridging bolts to the steel joists. Paragraph (d)(6) also requires that when a common bolt and nut attach two pieces of bridging to a steel joist, the nut that secures the first piece of bridging may not be removed from the bolt for the attachment of the second piece. In addition, when bolted diagonal erection bridging is required, bridging attachments may not protrude above the top chord of the steel joist. No comments on paragraph (d)(6) were received and it is promulgated as proposed.

Paragraph (e) Landing and Placing Loads

The work practice provisions found in § 1926.754(e) regarding the hoisting, landing and placing of deck bundles, in general, have already been discussed above. This paragraph (e) of § 1926.757 also addresses the hazards of landing and placing loads on steel joists. As discussed earlier, the proposed term ''decking;'' has been changed to ''metal decking'' in the final rule. This definition clarifies that paragraphs (e)(1) through (e)(5) apply to all activities associated with metal decking that is used as a support element for either a floor or roof system.

Paragraph (e)(1) applies to any employer who places a load on steel joists during steel erection. This paragraph requires that the load is adequately distributed so that the carrying capacity of any steel joist is not exceeded. After this general requirement is met, the employer must meet the specific conditions set forth in the remainder of § 1926.757(e).

The Agency received no comment on this provision, and therefore, promulgates this requirement as proposed.

Paragraph (e)(2) prohibits placement of any construction loads on steel joists until all bridging is installed and anchored and all joist bearing ends are attached in accordance with § 1926.757(b). As defined in the final rule, a construction load means any load other than the weight of the employee(s), the joists and the bridging bundle. Although bundles of decking constitute a construction load under this definition, under certain conditions decking can be placed safely on the steel joists before all the bridging is installed and anchored. These conditions form the basis for the exceptions in paragraph (e)(4) of this section.

The Agency received no comment on this provision, and therefore, promulgates this requirement as proposed.

Paragraph (e)(3) provides requirements for safe and stable placement of bridging bundles on steel joists. A bridging bundle is not considered a ''construction load.'' The weight of the bridging bundle is limited to 1,000 pounds because bridging will be placed on the joists before they have been fully stabilized. To ensure safe placement, this paragraph requires that the bundle of joist bridging be placed over a minimum of 3 steel joists that are secured at one end. Also, to ensure stability of the load, this provision requires that the edge of the bridging bundle be positioned within 1 foot of the secured end (some clearance is necessary for material handling purposes and to provide employee access to the steel joist's attachment point).

The Agency received no comments on this provision, and therefore, promulgates this requirement as proposed.

Paragraph (e)(4) sets forth special conditions which must be met before an employer is permitted to place a bundle of decking on steel joists that do not yet have all bridging installed. This paragraph applies only to bundles of decking and not to other construction loads. All six conditions must be met before the exception to the provisions of § 1926.757(e)(2) applies.

Paragraph (e)(4)(i) requires employers to determine, based on information from a qualified person, that the structure or portion of the structure is capable of safely supporting the load of decking. This determination must be documented in a site-specific erection plan which is made available at the construction site.

Paragraph (e)(4)(ii) requires that the bundle of metal decking be placed over

a minimum of three joists to distribute the load.

Paragraph (e)(4)(iii) requires that the three steel joists supporting the bundle of metal decking have both ends attached to the support structure. The attachments must meet the requirements prescribed in § 1926.757(b).

Paragraph (e)(4)(iv) requires at least one row of bridging be attached and anchored to the three joists specified in § 1926.757(e)(4)(iii). The qualified person determines the type of bridging, erection bridging or horizontal bridging, needed to satisfy this requirement.

Paragraph (e)(4)(v) limits the weight of the bundle of metal decking to 4,000 pounds (1816 kg).

Paragraph (e)(4)(vi) requires that the edge of the bundle of metal decking be placed within a foot (0.30 m) of the bearing surface of the joist.

In the proposed rule, this paragraph stated that, ''The edge of the bundle of decking is placed within 1 foot (.30m) of the bearing surface of the joist end.'' One commenter (Ex. 13–208) requested that it be revised to reference § 1926.757(e)(5) since both requirements are the same. The Agency agrees that the requirements are identical and has revised the provision accordingly for consistency.

Paragraph (e)(5) specifies the location for safe placement of all construction loads, not just metal decking, by requiring that the edge of the construction load be positioned within 1 foot of the secured end of the steel joists in order to enhance the stability of the load (some clearance is necessary for material handling purposes and for access to the steel joist's attachment point to the support structure).

Section 1926.758 Systems-engineered metal buildings

During SENRAC's deliberations on the prerequisites for anchor bolts, beams, columns and open web steel joists, the Committee discussed many anomalies that appeared to be associated with systems-engineered metal buildings. The Committee was advised by the Metal Building Manufacturers Association (MBMA) that over 50 percent of industrial buildings in steel erection are systems-engineered. This type of building frequently has lighter, cold formed members such as girts, eave struts and purlins (see definitions). Larger members in this type of construction are called rigid frames, a term not used in conventional steel erection. There are a large number of small specialized steel erectors who exclusively perform systems-engineered metal building erection. In light of these considerations and in an effort to facilitate compliance with this subpart, SENRAC developed a separate section for systems-engineered metal buildings. OSHA proposed a separate section and continues this approach in the final rule.

This section sets forth requirements to erect systems-engineered metal buildings safely. Systems-engineered metal buildings are defined in the definition section of this proposal. Systems-engineered metal buildings include structures ranging from small sheds to larger structures such as warehouses, gymnasiums, churches, airplane hangers and arenas.

Systems-engineered metal buildings use different types of steel members and a different erection process than typical steel erection. Many contractors erect systems-engineered metal buildings exclusively. An overwhelming majority of these erectors are small employers (63 FR 43477). The erection of systems-engineered metal structures presents certain unique hazards that are not addressed specifically by OSHA's existing steel erection standard. Although some of the hazards are similar to general steel erection, other hazards, such as those associated with anchor bolts, construction loads and double connections, are different.

Most of the requirements in this section are similar to those in other sections of this document. Where a conflict arises between a provision in the systems-engineered metal building section and that of another section of subpart R, to the extent that the work being performed is systems-engineered metal building work, the more specific systems-engineered metal building section would apply. This section, however, must not be interpreted to mean that (apart from sections 1926.755 and 1926.757), the other provisions of subpart R do not apply to systems-engineered metal buildings where appropriate.

In the proposed rule, the title of this section was ''Pre-engineered metal buildings.'' During the public hearing, a representative of the Metal Building Manufacturers Association (MBMA) (Ex. 207X; pp. 246–247), advised SENRAC that the title of this section used an out-of-date term, and suggested that it be replaced with a more current term such as ''metal-building systems.'' MBMA's position was based on its view that ''buildings are predominately custom engineered for each application and are no longer selected from a catalog of standard designs.'' The Agency believes that MBMA's suggestion is valid. However, MBMA's suggested term ''metal-building systems'' could be too broadly interpreted and mistakenly applied to all buildings made entirely of metal instead of only to those which are engineered and supplied as a complete, integrated product. Therefore, OSHA believes that ''systems-engineered metal buildings'' better reflects that intent and has changed the title accordingly.

Paragraph (a) states that all of the requirements contained in subpart R apply to systems-engineered metal buildings except for §§ 1926.755 (Column Anchorage) and 1926.757 (Open Web Steel Joists). This paragraph has been revised from the proposed rule to clarify that § 1926.758 contains all anchor bolt and joist requirements that are specific to systems-engineered metal buildings.

Paragraph (b) requires all structural columns be anchored by at least four anchor bolts. One commenter expressed concern with this requirement and observed that different anchorage designs, including some with fewer bolts, could meet the safety intent of this paragraph (Ex. 13–153). It is conceivable that under certain conditions, other designs for anchorages could provide the stability needed for safe construction. However, it would be very difficult for those responsible for erecting the structures to know if, from and engineering standpoint, these other approaches would provide sufficient stability. OSHA has decided to defer to the expertise of the Committee, which found that a four-bolt system would be more effective and simpler to institute.

Another commenter supported the Agency's efforts to ensure column stability while questioning the Agency's authority to compel structural design specifications that will require engineering expertise (Ex.13–210). As noted earlier in the discussion of Column Anchorage (§ 1926 755) and Double Connections (§ 1926.756(c)), the Agency believes it is appropriate to prohibit the erection of structural members that lack key safety features.

Additionally, one commenter asked if this requirement would apply to all columns or just to those with structural significance (Ex. 13–173). As discussed in the Column Anchorage section, the Agency has added definitions for columns and posts. The intent of adding these definitions was to distinguish between columns that need to have four bolts and those that do not. Those definitions apply to this section as well. Only columns that fit the definition are required to have four anchor rods/bolts.

The requirement in paragraph (c) is unique to the erection of systems-engineered metal buildings because rigid frames are found only in this type of structure. This paragraph requires that rigid frames have 50 percent of

their bolts or the number of bolts specified by the manufacturer (whichever is greater) installed and tightened on both sides of the web adjacent to each flange before the hoisting equipment is released. Like final § 1926.756(a), this provision requires an adequate number of bolts to ensure stability before the hoist line is released. Rigid frames are fully continuous frames that provide the main structural support for a systems-engineered metal building. They provide the support that is typically provided by columns and beams in conventional steel erection. Due to design and load requirements, connections in rigid frames occupy a greater area and require more than two bolts upon initial connection. The remaining bolts are used to attach other members to the structure and provide stability against wind loading. To allow these connections to be bolted only with two bolts would not be adequate in many cases to prevent a collapse hazard. No comments were received on this paragraph and it is promulgated as proposed.

Paragraph (d) also pertains to stability and prohibits construction loads from being placed on any structural steel framework unless such framework has been safely bolted, welded or otherwise adequately secured. Without proper bolting or welding to provide stability, a construction load could cause a collapse of the structure. No commenter were received on paragraph (d) and it remains unchanged in the final rule.

For clarity, the regulatory text of proposed paragraphs (e)(1) and (e)(2) has been incorporated into a single paragraph (e) in the final rule. However, the paragraph is promulgated with the proposed requirements intact.

Paragraph (e) pertains to double connections in systems-engineered metal buildings. When girts or eave struts share common connection holes, a double connection hazard exists. As with § 1926.756(c), a seat or similar connection will prevent one member from becoming displaced during the double connection activity. In girt and eave strut to frame connections where girts or eave struts share common connection holes, paragraph (e) requires that at least one bolt with its wrench-tight nut remain in place for the connection of the first member unless a field-attached seat or similar connection device is present to secure the first member so that the girt or eave strut is always secured against displacement. In addition, paragraph (e) maintains that the seat or similar connection device must be provided by the manufacturer of the girt or eave strut so that it is designed properly for the intended use. Because this form of double connection is unique to systems-engineered metal building construction and might not be considered a double connection under a literal reading of § 1926.756(c), this provision specifically addresses girt and eave strut to frame connections.

Changes to proposed paragraph (e)(2) were suggested by two commenters (Ex. 13–153), one who recommended that ''the seat or similar connection that would normally be welded to the frame, * * * should be provided by the frame manufacturer * * *''. The other commenter (Exs. 43 and 207X) suggested that paragraph (e) be revised to reflect current steel erection methods in which the responsibility of installing temporary girt or eave supports is assigned to the erector. This suggestion also included a request to delete paragraph (e)(2).

Systems-engineered metal buildings are designed as an integrated product—each element is designed for the completed unit. In fact, MBMA (Ex. 207X) pointed out (in the context of what the title should be for the section) that almost all metal buildings are now ''custom engineered.'' Consequently, the designers of the building are particularly well situated to know where the double connections will be, the loads on the seats during assembly, and how to design the seats. In contrast, the erector does not normally have this type of design expertise and is not well situated to assess the type of seat or other connection device necessary for each particular double connection.

Paragraph (f) provides that both ends of all steel joists or cold formed joists shall be fully bolted and/or welded to the support structure before releasing the hoisting cables, allowing an employee on the joists, or allowing any construction loads on the joists. A commenter suggested that this paragraph be deleted because joists are addressed more thoroughly in § 1926.757 (Ex. 13–153). Two building trades representatives submitted similar comments expressing concern that paragraph (f)(1) was inconsistent with § 1926.756(a) and that the requirement for joist ends to be fully bolted or welded is excessive. (Exs. 13–210 and 13–222). SENRAC found that systems-engineered metal buildings are erected differently than other steel structures. These different construction methods were discussed in the preamble for the proposed rule (63 FR 43477). Systems-engineered metal buildings rely on these connections for stability and strength. These construction methods are essential to guard against collapse of systems-engineered metal buildings. Therefore, the Agency is deferring to SENRAC's expertise with respect to this difference and promulgates this paragraph unchanged.

Paragraph (g) prohibits the use of purlins and girts as anchorage points for a fall arrest system unless written approval to do so is obtained from a qualified person. Generally, purlins and girts are lightweight members designed to support the final structure. They may not have been designed to resist the force of a fall arrest system. If, however, a qualified person determines that the purlin or girt is of sufficient strength to support a fall arrest system, it may be used for that purpose. The qualified person would be required to provide written documentation of this determination. This requirement is identical to the one for steel joists in proposed § 1926.757(a)(9).

Paragraph (h) provides that purlins may only be used as a walking/working surface when installing safety systems, after all permanent bridging has been installed and fall protection is provided. Purlins are ''Z'' or ''C'' shaped lightweight members, generally less than ⅛″ thick, 2–4″ wide on the top and up to 40 feet long. They are not designed to be walked on and, because of their shape, are likely to roll over when used as a walking/working surface if not properly braced. One commenter (Ex. 43) suggested that the use of cold-formed joists as walking/working surfaces should be prohibited along with purlins in paragraph (h). OSHA has not included cold-formed joists in this paragraph because they provide greater stability than do purlins which are not designed to be used as walking/working surfaces without the addition of specific safety precautions.

Paragraph (i) addresses the placement of construction loads on systems-engineered metal buildings to prevent collapse due to improper loading of the structure. This paragraph requires that construction loads be placed within a zone that is not more than 8 feet (2.5 m) from the centerline of the primary support member. Unlike conventional decking, systems-engineered metal building decking bundles are lighter, and the sheets in the bundle are staggered. This staggering means that the bundles must be set so that the end of one bundle overlaps another bundle since the lengths of the sheets vary. The zone needs to be big enough to allow for the lapping while still having the support of the structure. An 8 foot (2.5 m) zone allows enough room to meet these objectives. No comments were received and the final remains as proposed.

Section 1926.759 Falling object protection

This section sets forth the requirements for providing employees with protection from falling objects. A real, everyday hazard posed to steel erection employees is loose items that have been placed aloft that can fall and strike employees working below.

Paragraph (a) requires that all materials, equipment, and tools that are not in use while aloft be secured against accidental displacement. The Agency received no comments on this section of the standard, and the provision is unchanged in the final rule.

The intent of paragraph (b) is that, when it is necessary to have work performed below on-going steel erection activities (other than hoisting), effective overhead protection must be provided to those workers to prevent injuries from falling objects. If this protection is not provided, work by other trades is not to be permitted below steel erection work. One way controlling contractors can reduce the hazards associated with falling objects is by scheduling work in such a way that employees are not exposed.

In the proposed rule, this section was titled, ''overhead protection.'' Most of the comments OSHA received on this section confused this provision with the requirements for protecting workers from falling objects associated with hoisting operations, which is addressed by § 1926.753(d). OSHA has changed the title of this paragraph to ''Protection from falling objects other than materials being hoisted'' so employers will not confuse the two provisions.

As proposed, § 1926.759(b) stated that, ''The controlling contractor shall ensure that no other construction processes take place below steel erection unless adequate overhead protection for the employees below is provided.'' Two commenters (Exs. 13–318 and 201X; p. 120) stated that the controlling contractor may not always be able to ensure that nobody is working under a steel erector. In other words, these commenters believe that the use of the word ''ensure'' would make the controlling contractor strictly liable—would have to guarantee—that no one worked below the steel erection activities. The use of the word ''ensure'' in this standard does not make the controlling contractor liable if it institutes reasonable measures to comply with the requirement. All defenses normally available to employers are equally available where a requirement is phrased using the term ''ensure.''

For a different reason, however, the Agency has rephrased the provision to read that the controlling contractor will ''bar'' other construction processes below steel erection. This change was made to more directly state that the employer must institute measures to keep employees out of the area below the steel erection activities.

Section 1926.760 Fall Protection

Paragraph (a) General Requirements

Paragraph (a) sets the fall protection threshold height for steel erection activities. Final paragraph (a)(1) requires that, with two exceptions, each employee covered by this rule who is on a walking/working surface with an unprotected side or edge more than 15 feet (4.6m) above a lower level must be protected by conventional fall protection (systems/devices that either physically prevent a worker from falling or arrest a worker's fall). One exception allows connectors to not use their personal fall protection to avoid hazards while working at heights between 15 and 30 feet. The other exception allows workers engaged in decking in a controlled decking zone to work without conventional fall protection at heights between 15 and 30 feet.

This is essentially the same as the proposed rule and SENRAC's recommendation. OSHA added a provision setting out the types of protection allowed. Protection must be provided by the use of guardrail systems, safety net systems, personal fall arrest systems, positioning devices systems or fall restraint systems. The Agency also re-worded the exception for connectors to clarify that they are permitted to not use their fall protection system where, in their sole discretion, they determine that is necessary to avoid a hazard.

Prior to enactment of this final rule, the fall protection requirements for steel erection were in three separate provisions. Depending on the structure and the type of fall exposure, one of the following applied: §§ 1926.750(b)(1)(ii), 1926.750(b)(2)(i) (both are in subpart R), or § 1926.105(a) (subpart E, Personal Protective and Life Saving Equipment). These provisions were the subject of considerable litigation, the product of which was the following: (1) In single story structures, § 1926.105(a) applied, which required fall protection at and above 25 feet for both fall hazards to the interior and exterior of the structure; (2) in multi-tiered buildings, § 1926.750 applied to fall hazards to the interior of the building. Several courts held that, under that standard, fall protection was required at and above 30 feet; (3) in multi-tiered buildings, § 1926.105(a) applied to fall hazards to the exterior of the building, which required fall protection at and above 25 feet. With the exception of § 1926.754(b)(3), the final rule eliminates distinctions between interior and exterior fall hazards and tiered versus untiered buildings for the fall protection trigger heights.

The fall protection rules for steel erection differ from the general fall protection rules in subpart M, which set six feet as the trigger height for fall protection. OSHA agrees with SENRAC that steel erection activities are different from most other construction activities. The different trigger height reflects these differences. OSHA also agrees with SENRAC that the former fall protection rules relating to steel erection are insufficiently protective and need to be strengthened.

In examining the issue of the threshold height for requiring conventional fall protection, SENRAC considered 29 CFR 1926 subpart M, the general fall protection standard for construction. In general, the subpart M trigger height for fall protection is six feet. SENRAC evaluated whether the trigger height in steel erection should be different than that in subpart M and concluded that it needed to be higher.

Steel erection differs from general construction in three major respects—the narrowness of the working surface, its location above, rather than below, the rest of the structure, and a minimum distance of approximately 15 feet to the next lower level. We explained the steel erection process in the proposal as follows (63 FR 43478–79):

> Initially, vertical members, referred to as columns, are anchored to the foundation. The columns are then connected with solid web beams or steel joists and joist girders to form an open bay. In a multi-story building, the columns are usually two stories high. These structural members are set by connectors in conjunction with a hoisting device (typically a crane). When the two-story columns are set in place, the connector installs the header beams at the first level, which forms the first bay. Each floor is typically 12.5 to 15 feet in height. After an exterior bay is formed (''boxing the bay''), the filler beams or joists are placed in the bay. The connector then ascends the column to the next level, where the exterior members are connected to form a bay, and so on. The floor or roof decking process basically consists of hoisting and landing of deck bundles and the placement and securing of the metal decking panels.

In short, a new, very narrow working surface is constantly being created as skeletal steel is erected at various heights. For many steel erectors, especially connectors, the work starts at the top level of the structure.

The special circumstances of steel erection can make conventional fall protection very difficult to deploy below 15 feet. For many steel erectors, especially connectors, the work starts at the top level of the structure. This means that anchor points above foot level are often limited or unavailable. Because of the nature of the structure, the available fall arrest distance is usually about 15 feet.

Thus, we noted in the proposal that fall equipment manufacturers appeared before the Committee and discussed the relationship between the fall distance when fall arrest systems are used and the trigger height for requiring fall protection (63 FR 43479). The location of anchor points, in conjunction with a number of other factors, will affect the fall arrest distance—the distance a worker will fall before the fall arrest system stops the fall. The fall arrest distance is the sum of the distance the worker falls before the fall arrest system begins to stop the fall, plus the additional distance that it takes for the system to slow and then finally stop the fall completely. Other factors that affect the fall arrest distance include the type of fall protection system used, the type of components and how the system is configured and anchored. The degree of mobility needed for the worker, location of available anchor points, and the need to limit the arresting forces on the worker's body also affect the choice of system and its installation.

Personal fall arrest systems commonly used by workers in full body harnesses often have one of the following: (1) Shock absorbing lanyard; (2) self-retracting lifeline; (3) rope grab with vertical lifeline; or (4) shock absorbing lanyard with rope grab and vertical lifeline. Fall arrest distances can vary with different types and lengths of lanyards. The distances can also vary in systems that permit the user to adjust the amount of slack.

The three common types of anchorage systems include: (1) Horizontally mobile and vertically rigid (such as a trolley connected to a flange of a structural beam); (2) horizontally fixed and vertically rigid (such as an eyebolt, choker or clamp connected to a structural beam, column or truss); and (3) horizontally mobile and vertically flexible (such as a horizontal lifeline suspended between two structural columns or between stanchions, which are attached to a structural beam and designed to support the lifeline). Eight feasible combinations of personal fall arrest systems and anchorage connectors were discussed (63 FR 43479). The total fall distance can differ significantly depending on how the system is configured. A system using an anchorage connector, harness and shock absorbing lanyard will have a total fall distance between 3 and 23 feet, while the total fall distance for a system using an anchorage connector, harness and self-retracting lifeline will measure between 4 and 10.5 feet. (Exs. 6–10 and 9–77-Tables 6 and 7). In 1995, one fall protection manufacturer indicated to SENRAC that the lowest point of the ironworker's body should be at least 12.5 feet above the nearest obstacle in the potential fall path when using a properly rigged, rigidly anchored, personal fall arrest system of the shock absorbing lanyard type or self-retracting lifeline type. In view of the types of equipment available, potential locations of anchor points, and typical distance between work surfaces and the next lower level, the Committee determined that 15 feet was an appropriate threshold for requiring fall protection, subject to the two exceptions mentioned above.

OSHA received comments supporting a requirement for fall protection beginning at 15 feet (Exs. 13–354; 13–151; and 13–207C). The National Erectors Association (Ex. 208X, p. 115) supported a 15-foot rule and testified against the ''one size fits all'' trend (relative to having a 6-foot rule). Robert Banks of the Safety Advisory Committee of Structural Steel (Ex. 205X, p. 294) felt that, when finalized, the proposed rule would generate widespread use of personal fall arrest equipment. Innovative Safety, (Ex. 207X, pp. 15–16) testified that 15 feet was realistic and that various fall arrest systems could be used at that height. One commenter (Ex. 13–246) advocated a 10-foot rule.

However, OSHA also received comments and testimony in support of a 6-foot fall protection rule. Several commenters advocated consistency between Subpart R and M (Exs.13–159; 13–148; 13–121; 13–260; and 13–215). Some general contractors stated they support a 6-foot fall protection rule for steel erectors (Exs. 207X, p. 211; 207X, pp.134–135, p.172; 207X, pp. 182–186; 207X, p. 172; 13–366; 13–352; 13–306; 13–346; 13–340; 13–338; 13–240; 13–229; 13–214; 13–192; 13–167; and 13–159). Five of these companies testified to the successful implementation of their 6-foot programs for steel erection for all steel erection operations, including connecting and decking. For example, a representative from Kellogg Brown & Root testified (Ex. 207X, pp. 133–134) that their company has had a 6-foot policy for eight years. When the structure cannot accommodate fall protection or fall prevention systems, their company uses aerial lifts and/or scissors lifts. W.S. Bellows Construction Corp. implemented a 6-foot fall protection policy in 1994 (Ex. 207X, pp. 136–141) when subpart M took effect. Bellows testified that their policy has increased productivity, decreased insurance costs, and saved lives. An official from CENTEX Construction Co., a general contractor, declared (Ex. 207X, pp.182–186) that his company, because of positive experiences on earlier projects, implemented a policy to hire only subcontractors using 6-foot programs. Turner Construction Company's spokesman testified (Ex. 207X, p. 211) that their company would prefer a 6-foot rule, but could operate with a 15-foot threshold.

Four commenters referenced the fatality statistics and were concerned that OSHA included the SENRAC fall protection provisions in the proposed rule. These commenters contended that technology was available to protect steel erection workers at 6 feet (Nigel Ellis Ex. 23; Beacon Skanska Const. Co. Ex.–13–285; Clark Construction. Co. Ex. 202X, p. 9–10; and Joseph Fitzgerald Ex. 13–31). However, one of these commenters, Mr. Nigel Ellis, acknowledged that preplanning might not preclude all the anchorage point problems, and where employers prove that it is infeasible to provide overhead anchorage points, the rule should contain provisions that would permit free fall distances greater than 6 feet. For example, if workers are in situations where the only anchor point is at foot level, there would be difficulties when using personal fall protection at 6 feet. In general, in order to use a personal fall arrest system at 6 feet, the system would have to either be anchored above the worker's head or set up to restrain the worker from stepping past an open side or hole. For many steel erection activities, he noted this may be difficult to achieve at 6 feet.

During the rulemaking process, SENRAC and OSHA analyzed accident information derived from OSHA's IMIS system. There were two studies on steel erection fatalities—a seven-year OSHA study and a subsequent eleven-year OSHA/SENRAC study (which included the previous study's data; Exs. 9–14A; 9–42 and 49). An earlier OSHA five-year study of construction fatalities in general showed that 8% of the fatal falls occurred between 6 and 10 feet and that 25% occurred between 11 and 20 feet. However, of that 25%, the Agency does not know how many ironworker fatalities occurred between 11 and 15 feet. With this significant gap in the data, we cannot determine whether a high proportion of the falls between 11 and 20 feet occurred below 15 feet. We note that much of the steel erection

work involving single story structures, such as warehouses, is done at or above 15 feet.

After analyzing the entire record, the Agency has determined that the use of conventional fall protection at 15 feet and above is necessary and feasible in most cases. While some general contractors and large industrial steel erectors may be providing fall protection below 15 feet, the data are unclear with respect to how much of a need there may be for requiring fall protection in steel erection at those lower heights. Also, many situations in steel erection do not permit connecting fall protection below 15 feet. In addition, steel erection work that is done between 6 and 15 feet is often performed from ladders, scaffolds, or personnel work platforms (63 FR 43479). Therefore, OSHA has decided not to require conventional fall protection in steel erection below 15 feet.

Paragraph (a)(2) covers requirements for perimeter safety cables. It is modified from the proposal and moved from proposed § 1926.756(f)(1). It specifies that perimeter safety cables shall be installed at the final interior and exterior perimeters of multi-story structures as soon as the decking has been installed. These cables must be installed regardless of other fall protection systems in use. They must meet the criteria for guardrail systems in subpart M (1926.502(b)).

The final requirements differ from those proposed by specifying when the cables must be installed: ''as soon as the decking has been installed.'' Although the proposal's preamble stated SENRAC's and OSHA's intention that ''these cables * * * be installed as soon as the deck has been installed * * *'' (63 FR 43471), the proposed regulatory text carried over the broader language of the current requirement that cables be installed ''during structural steel assembly.'' To carry out SENRAC's intention, as well as to improve clarity, we have specified when the cables must be installed, so that they can protect the detail crews which follow the decking crews (Id.).

The final rule also changes the minimum thickness requirement of the cable to ¼″ to conform to the guardrail specifications required in subpart M (§ 1926.502(b)). We had proposed the cable be at least ½,″ which was the previous requirement of subpart R. We agree with the commenters that the subpart M requirements for guardrails are appropriate for the perimeter safety cables in steel erection.

The Associated General Contractors of Wisconsin and D.C. (Exs. 13–334 and 13–210) suggested that the name ''perimeter cable'' be changed to ''perimeter cable guardrails'' to be consistent with Subpart M. Because the term ''perimeter safety cable'' is so commonly used in the steel erection industry, the Agency has decided not to adopt this suggestion.

A few participants (Exs. 206X, p. 55; 13–63; and 13–209) stated that the meaning of perimeter is undefined because the perimeter may change as work progresses. However, in the vast majority of buildings the perimeter columns define the final perimeter where the edges will not be expanded. LeMessurier Consultants (Ex. 13–127) suggested that the proposed words ''periphery'' and ''perimeter'' lead the reader to believe that only the outermost edges of the structure have to be guarded and that the final interior perimeters (such as for atriums) are similar to final exterior perimeters in that these edges will not be expanded. We agree, and the final text makes clear that the final ''interior'' as well as the final ''exterior'' must be protected by the use of safety cables. However, we are not including an appendix with diagrams, as suggested, because of the wide variety of perimeter configurations.

One commenter (Ex. 206X, p. 55) testified that the steel erectors had the ingenuity to erect the perimeter safety cables and should be responsible for complying with the standard. Others commented that it should be the controlling contractor's responsibility to comply with the standard or to make sure, by contract, that competent people do the work and that it is a common practice for erectors to be tasked, by contract, with installing perimeter safety cables along with their other work.

The majority of the general contractors testified (see for example, Exs. 13–63, 13–116, 13–161 and 13–203) that they were opposed to making the controlling contractor responsible for the erection of equipment required in the steel erection standard. They feel the erectors are the most experienced at erecting perimeter safety cables and should have that responsibility.

The perimeter cable provision in the proposal did not specify either the steel erector or the controlling contractor as responsible for installing the perimeter cables. Section 1926.750(a) states, in part, that ''the requirements of this subpart apply to employers engaged in steel erection unless otherwise specified.'' Since the perimeter cable provision does not specify any particular entity as responsible for installing the cables, all employers engaged in steel erection with respect to the project are responsible for compliance with this provision, including the controlling contractor. The extent of the controlling contractor's responsibility for complying with this provision would be determined in accordance with the Agency's multi-employer policy; that policy applies to all controlling employers, irrespective of the type of construction.

Paragraph (a)(3) requires that connectors and employees working in controlled decking zones be protected from fall hazards as provided in paragraphs (b) and (c) of this section, respectively. The final rule retains (with some modifications) the proposed exceptions to the general requirement that fall protection be provided at heights above 15 feet. According to paragraphs (b) and (c), employers of connectors are partly excepted from the general rule and employers of leading edge decking workers are excepted from some of the general fall protection requirements if they comply with specified alternative procedures in these paragraphs. These provisions were the subject of much division of opinion both during SENRAC's deliberations and during the post-proposal phase of this rulemaking procedure. We discuss these provisions immediately below.

Paragraph (b) provides a special rule for employers of connectors. Paragraphs (b)(1) and (b)(2) are unchanged from the proposal. Paragraph (b)(1) requires each connector be protected from fall hazards of more than two stories or 30 feet (9.1 m) above a lower level, whichever is less. Protection at this height is currently required by OSHA's existing steel erection standard for all employees engaged in steel erection. Paragraph (b)(2) requires each connector to complete connector training in accordance with § 1926.761. Such training must be specific to connecting and cover the recognition of hazards, and the establishment, access, safe connecting techniques and work practices required by § 1926.756(c) and § 1926.760(b).

Final paragraph (b)(3) provides that connectors must be provided, at heights over 15 and up to 30 feet above a lower level, with a personal fall arrest system, positioning device system or fall restraint system and wear the equipment necessary to be tied off, or be provided with other means of protection from fall hazards in accordance with paragraph (a)(1) (or, for protection against perimeter falls, (a)(2)) of this section.

This provision reflects SENRAC's findings that at times connectors need to remain unencumbered. The revised

final provision also makes clear that this exception applies only where the employer has provided the connector with a complete personal fall protection system. This includes a personal fall arrest system as defined in § 1926.751 with secure anchorages for tying off. Employers may, of course, protect connectors working between 15 feet and 30 feet with another allowable fall protection system, in which case this limited exception does not apply.

The Committee's minutes (Ex. 6–1 through 6–11) show that the proposed ''connector exception'' was a compromise position. It was adopted by the Committee after listening to testimony of connector panels, fall protection equipment representatives, general contractor representatives, and steel erector representatives, all presenting differing views on whether connectors need different fall protection requirements than other non-connecting ironworkers. The Committee was informed that California's rule allowed the connector to be untied between 15 and 30 feet and the rule appears to be operating successfully (June 27–29, 1995-Committee Minutes). SENRAC told OSHA that it intended to define ''connector'' narrowly because the primary purpose of the definition was to specifically define which ironworkers are covered by the ''connection exemption.''

We proposed this exemption to reflect SENRAC's consensus agreement. As shown above, SENRAC recognized that the issue of fall protection for connectors was highly controversial. The minutes of the Committee show that some of its members agreed on the provision only when they were assured that within 3 years from the rule's effective date, the Agency would evaluate the available accident data and assess whether the rule was sufficiently protective.

The proposal set out reasons why SENRAC believed that this exception was necessary: ''The Committee believes that under certain conditions, the connector is at greater risk if he/she is tied off. For example, in the event of structural collapse, a tied-off connector could be forced to ride the structure to the ground.'' (63 FR 43480).

The major concern of proponents of the exception both during SENRAC's meetings and during the rulemaking comment period and hearing, was that connectors needed freedom of movement and requiring them to tie-off would hinder this. The concern, as stated previously, was that in the event of structural collapse, a connector would be forced to ''ride the structure to the ground'' if tied off, whereas he/she could jump free of the collapsing structure if he/she were not tied off. The ability to move without restraint in order to get away from incoming loads is also stated as a reason for connectors not to tie off.

The following discussion of the record combines information in the minutes of the committee with as information and comment submitted directly into the post-proposal record.

Fall protection was discussed during every SENRAC meeting. From the start, some committee participants stated that connectors need to remain unencumbered, both to do their job and to avoid dangerous conditions they commonly face. In the July, 1994 meeting where the full committee met with the fall protection workgroup, this point was made. Participants noted that connectors and some other steel erection workers are highly trained and experienced. It was stated that it would be a ''greater hazard'' to tie off such highly experienced people. (The term ''greater hazard'' has a precise legal meaning; it is an affirmative defense which requires employers to demonstrate various elements in order to be relieved of a citation. However, throughout SENRAC's discussions and the subsequent rulemaking, the term was used informally.) In its deliberations, SENRAC considered whether there are any jobs that requires a person to not be protected from fall protection because it is technically and economically infeasible. In the August, 1994 SENRAC meeting, a group of connectors from the Ironworkers Local #7 discussed ''their experiences and views on the relative merits of mandatory fall protection for connectors and other workers.'' They uniformly stated that they needed to remain unencumbered when they were working with hoisting equipment and some members recounted personal experiences where they were able to escape collapses and incoming steel only because they were not tied off. By the November 27–December 1, 1995 meeting, SENRAC agreed on a consensus view incorporating the limited exception for connectors, as proposed. A few participants insisted that OSHA review fall statistics within 3 years after the final rule becomes effective, to check on whether the exception is adequately protective of connectors.

Issue #12 in the proposal asked the public to comment on whether there should be specific criteria indicating when connectors should tie-off. We also asked if it was feasible or posed a greater hazard for connectors to tie-off and if it should be the employer's responsibility to determine where and when fall protection should be required. Several ironworkers testified during the December 1998 hearings about their personal experiences and belief that it is important to be able to move freely and, at times, to jump off a collapsing steel member.

Several commenters (Exs. 13–68; 13–345; 13–349; 13–331; and 13–114) stated connectors needed freedom of movement up to 30 feet. One commenter (Ex. 13–114) said the concern is not with falling, but being able to get away from the steel during a collapse. A member of the Ironworkers' Panel No. 1 testified (Ex. 205X, pp. 312–313) that even though the connector appears to be ''running around like he's crazy, he's not. He has a place to go, and he knows where he is going at all times.''

A number of other commenters objected to allowing connectors to choose whether to use fall protection, but none of these individuals indicated that they had experience connecting (Exs. 13–31; 13–60; 13–210; 13–222; and 13–334). The point was made, however, that, ''in the case of structural collapse, the connector will ''ride the structure to the ground'' whether or not he/she is tied off'' (Ex. 13–31). The companies described above that advocated requiring fall protection at 6 feet require the connectors on their projects to be tied-off at all times. Furthermore, some commenters supporting the connector exception acknowledge that incoming steel can injure or kill connectors when they are not tied-off; Peterson Beckner Industries, Inc., (Ex.13–354) related the case of two employees who were hit by incoming loads: the one who was tied off was hit and suffered a broken arm. The one who was not tied off was knocked off of a beam at the exterior of a building and was killed.

The record also contains two studies on steel erection fatalities—a seven-year study and a subsequent eleven-year study (which included the previous study's data) (Exs. 9–14A; 9–42 and 49). The eleven-year study categorized fatalities in a number of ways, including by ''activity'' and by ''cause.'' Of the various causes listed, collapse was the third highest at 15.8% of the fatalities (the highest category was falls from slipping at 24%; second was ''unknown'' at 17%). By activity, connecting was second highest at 17% (the most dangerous activity was decking, at 23%).

The concern about collapses is the most cited reason for allowing connectors to not use fall protection equipment. SENRAC recommended and OSHA proposed new provisions that

address the causes of collapses such as inadequately cured concrete column foundations and inadequate or improperly repaired anchor bolts. The final rule addresses these by requiring concrete to be properly cured, a sufficient number of anchor bolts to support the columns and that anchor bolts are properly repaired (§ 1926.752(a); § 1926.755(a); and § 1926.755(b)). This should reduce the risk of collapse to connectors.

With respect to uncontrolled incoming steel exposing connectors to struck-by hazards, the final rule contains criteria for hoisting and rigging of steel members to minimize the likelihood of a suspended load shifting, falling and striking employees. Paragraph (a) of 1926.753 requires a competent person to perform a pre-shift visual inspection of the crane, and for qualified riggers to inspect all rigging prior to each shift. Section 1926.753(b) addresses working under the load. This paragraph requires employers to minimize employee exposures to the extent possible; however, it may be necessary for certain employees, such as connectors and those hooking and unhooking loads, to briefly work directly below a suspended load. To minimize this hazard, qualified riggers are required to rig the load to prevent displacement and to use a self-closing safety latch (or equivalent). These precautions are designed to minimize the chance of components disengaging from the hook and causing the load to fall, which should also reduce the risk to connectors.

After reviewing the comments and testimony submitted to the rulemaking record after the proposal was published, OSHA has determined that the post-proposal rulemaking record is similar to the comment and testimony submitted to the Committee during its meetings and in various workgroup meetings. In addition, the consensus agreement of the Committee, which included representatives of all interests affected by this rule, reflects an agreement that employee safety would be promoted by the adoption of the proposed standard, including the connector exception. Comment and testimony submitted by connectors and various representatives of ironworker employees overwhelmingly supported the proposed provision allowing connectors to not tie-off when working below 30 feet. For all these reasons, the Agency has decided to defer to the determinations of the Committee and allow connectors to not be tied-off in order to avoid hazards. The definition of ''connector'' reflects SENRAC's intention to define that term narrowly. And as requested by some members of SENRAC, OSHA will examine the compliance experience of this provision within 3 years to determine if connectors are adequately protected from falls applying these provisions.

In sum, since the Committee considered the full range of evidence on this issue in its deliberations, the Agency is deferring to its expertise and assessment of that evidence. The Committee's expertise, in combination with the information relied upon by the Committee, has provided OSHA with much of the supporting evidence for this standard. While other approaches for protecting connectors against falls may be possible, based on the Agency's concurrence with the negotiated proposal, the information in the record, including material used and generated by SENRAC during the negotiating process, OSHA has relied on the Committee's expertise and decided in this instance in favor of the approach recommended by SENRAC.

Paragraph (c) Controlled Decking Zone (CDZ).

The final standard's provisions for controlled decking zones (CDZ) are mostly unchanged from the proposal. The CDZ is an alternative to fall protection for leading edge decking workers between 15 and 30 feet above a lower level. If an employer establishes a CDZ that conforms to paragraph (c), employees authorized to be in that zone who are trained pursuant to § 1926.761, do not have to be provided with or use a fall protection system. OSHA proposed the provision based on SENRAC's consensus view that this alternative approach to fall protection would substantially reduce the number of accidents involving falls during decking.

Paragraph (c)(1) requires that each employee doing leading edge work in a CDZ must be protected from fall hazards of more than two stories or 30 feet, whichever is less. CDZs are inappropriate for decking operations at and above these heights. For example, single story, high bay warehouse structures and pre-engineered metal buildings often require decking operations more than 30 feet above lower levels. The exception would not apply in these situations.

An important aspect of a CDZ is controlled access. OSHA fatality date (Ex. 9–14 and 9–49), indicate that some employees who suffered fatal falls from areas that were being decked were not engaged in leading edge work. Paragraph (c)(2) limits access to the CDZ exclusively to those employees who are actually engaged in and trained in the hazards involved in leading edge work.

Final paragraph (c)(3) addresses the physical limits of a CDZ, and requires that the boundaries be designated and clearly marked. The CDZ shall not be more than 90 feet (27.4 m) wide and 90 feet (27.4 m) deep from any leading edge, and control lines, or the equivalent (for example, the perimeter wall), shall be used to restrict access to the area.

The proposal asked for public comment on whether a definition of ''control lines'' was necessary, or whether non-mandatory appendix D, which describes acceptable criteria for control lines, provided an adequate description. It also asked whether appendix D should be incorporated into the fall protection provisions.

Several commenters (Exs. 13–113, 13–170G, 13–344, 13–173, 13–210 and 13–215) requested that Subpart R's control line criteria conform to the criteria found in subpart M—§ 1926.502(g)(3). In the final rule, OSHA has made the provision more consistent with subpart M where possible. A new paragraph was added to subpart R's appendix D regarding flagging or marking of the control line with highly visible material. The only remaining difference in the control line requirements is the allowable distance from the leading edge. A control line for a controlled decking zone is to be erected not more than 90 feet (27.4 m) from the leading edge, while the maximum distance permitted in Subpart M is 25 feet. The longer maximum distance in Subpart R is needed because of the size of the bays that are decked.

A commenter (Ex. 13–86), a contractor who performs traditional and pre-engineered steel erection, asked OSHA to conform the requirements for ''control lines'' in subpart R with the requirements for ''warning lines'' in subpart M since, in its view, the two systems serve basically the same purpose. OSHA disagrees with the commenter. We believe the systems perform different functions and therefore need different criteria to address those differences.

The controlled decking zone section requires that the boundaries of the zone be designated and clearly marked and that the access be limited exclusively to those employees engaged in leading edge work. One means of fulfilling this obligation is to erect control lines. While other methods might also be used, control lines are commonly used to restrict access to the unprotected area by creating a highly visible boundary. Their high visibility readily defines the area in which employees will work

without conventional fall protection, and visually warns employees that access is limited to authorized personnel. Warning line systems, however, are erected close to the edge of a roof (as close as 6 feet). They delineate the area where mechanical equipment may be used on roofs, and warn employees when they are approaching a fall hazard. The criteria for warning lines contemplated that there would be unintended contact with the line (such as an employee backing into it), and that such contact will attract the employee's attention, enabling the employee to stop in time to avoid falling off the roof. As referenced in the preamble to subpart M (59 FR 40712), the basis for the warning line system originated from the 1980 rule for Guarding of Low-Pitched-Roof-Perimeters During the Performance of Built-Up Roofing Work (45 FR 75618–631). The 1980 preamble specifically stated that warning lines function by providing a direct physical contact with the employees. This direct physical contact with the line dictates that the criteria for warning lines be substantially stronger and more rigid then a system whose primary function is to limit access by a visual warning.

Paragraph (c)(4) states that each employee working in a CDZ must complete the CDZ training, as specified in this subpart. Employees are required to be trained to recognize the hazards associated with working in a controlled decking zone, and trained in the establishment, access, safe installation techniques and work practices required by certain sections of this subpart, such as § 1926.754(e)—Decking and § 1926.760(c)—Controlled Decking Zone.

Paragraph (c)(5) requires that during initial placement, deck panels shall be placed to ensure full support by structural members. This provision addresses the specific hazard that results when full support is absent when placing metal decking. For example, in steel joist construction, metal deck sheets are typically 20 feet or longer and may span more than 4 joists (typically spaced 5 feet apart). A hazard is created if the deck is placed so that only three joists are supporting the sheet and the deck ends are unsupported. A worker not using fall protection and stepping onto the unsupported end of a deck sheet so placed is exposed to a potentially fatal fall hazard.

Paragraph (c)(6) states that unsecured decking in a CDZ shall not exceed 3000 square feet (914.4 m^2). This section is intended to limit the area of unsecured decking in which employees work. Because metal decking sheets are typically not uniformly sized and can create alignment problems, it is common practice to install a series of unsecured sheets on the structural member prior to fastening. The Committee believed that 3000 s.f. would be necessary for the metal decking to be placed and then properly aligned prior to tack welding.

The final rule, in § 1926.760(c)(6), prohibits more than 3000 feet of unsecured decking in the CDZ. This provision is unchanged from the proposal. OSHA explained this provision in the preamble to the proposal as follows: ''The proposal would limit the area of unsecured deck to 3000 square feet (914.4 m^2) to restrict the exposure to employees engaged in the placement of these deck sheets. Given the dimensions of typical bay (a typical bay is approximately 9000 s.f.), 3000 square feet was determined to be an appropriate limit that would allow for the decking to be placed and alignment to be performed prior to tack welding. This limit would thus greatly reduce the hazards associated with large areas of decking being left unattached and unattended.'' (63 FR 43481). The Steel Decking Institute's representative, Robert Paul, recommended that the provision be changed to require immediate securing of the decking in a CDZ. ''The SDI cannot endorse the concept of a CDZ with deck being unfastened and petitions that it be changed. Our position is and [has] always been that decking can be fastened immediately and should not be walked on until after it is fastened.'' (Ex. 203X; p. 98). Phil Cordova, a SENRAC member, acknowledged that immediate securing was probably feasible in some cases: ''* * * I think that you're probably correct on some decks probably need to be attached immediately.'' (Ex. 203X; p. 104). By contrast, SDI acknowledged in testimony that there were instances where you could not immediately attach the decking: In response to Mr. Cordova's question: ''How would you align these decks if they're attached and they vary in size?'', Mr. Paul stated: ''Most decks, those with a nestable side lap, certainly have an adjustability that they can be laid to a varying level of coverage. Even decks that have a button punchable side lap within the standard button punchable type side up, there is some leeway to it. Some decks cannot. Some decks do need to be incremented that have no adjustability in the button punchable side lap. And really the only way to put those down is to increment them.'' (Ex. 203X; p. 105). Mr. Cordova elaborated on the kind of decking which cannot be immediately secured. It is ''type B'' decking, a corrugated type of decking used generally as a ''roof deck, not as a floor deck'' that ''we generally see in warehouse applications''. (Ex. 203X; p. 142–143). Mr. Cordova agreed that this type of decking is used in multi-story structures as well (*Id*).

Since this issue was so closely considered by the Committee during its deliberations, the Agency has decided to defer to its judgment and promulgate the provision essentially unchanged. Although the final rule does not require it, OSHA encourages employers to use alternative kinds of decking which are easier to attach initially, wherever such decking is appropriate and available.

Paragraph (c)(7) states that safety deck attachments shall be performed in the CDZ from the leading edge back to the control line and shall have at least two attachments per panel. This provision was intended to address the hazard in leading edge work that arises when an employee turns his/her back to the leading edge while attaching deck sheets. This provision will help prevent employees from inadvertently stepping off the leading edge. Safety deck attachments are usually accomplished with tack welds but can also be achieved with a mechanical attachment, such as self-drilling screws, or pneumatic fasteners.

Paragraph (c)(8) prohibits final deck attachments and the installation of shear connectors from being done in the CDZ. Activities such as these are not leading edge work, and employees performing this type of work can be readily protected from falls by the use of conventional fall protection.

Phil Cordova, testifying for the Decking Panel of SENRAC, stated: ''this controlled decking zone that [SENRAC has] created will save lives. It will make the job a lot safer. This is our recommendation * * *'' (Ex. 208X; p. 143). Fred Codding, another member of SENRAC, testified that the CDZ provision ''was one of the most important decisions made during the course of SENRAC'' (Ex. 208X; p. 211). Mr. Codding noted that the decision to recommend the CDZ ''influenced other segments of the proposed standard, which deal with decking such as loads, covering holes and other things. They were all part of a real * * * compromise * * *'' (*Id*).

Some of the comments to the record questioned the sufficiency of the CDZ alternative to prevent falls in light of the statistical information in the record showing that a high percentage of steel erection fatalities result from decking accidents. SENRAC believed that many

of the accidents attributed as falls during decking will be prevented by the restricted access of the CDZ, and by requirements for decking construction in paragraph § 1926.754. SENRAC's position was stated by Mr. Codding at the rulemaking hearing:

> [M]any of these accidents were merely not people just walking off or falling off the leading edge of decking, but * * * (were due to) the lack of knowledge on how to install floor or roof decking; * * * people were walking through the area that had no business in the area (and) were falling and slipping through the sheets; that they had no idea the sheets were loose and could become displaced; that there was improper bearing on the sheets on the structural beam supporting them; that bundles of the decking were landed on unsecured members.

(*Id* at 67).

As pointed out by the testimony of Mr. Robert Samela, president of a metal deck erecting company operating as deck erectors since 1972, ''this reduction in fatalities ignores the positive effects of additional training * * *'' (Ex. 208X; p. 138–139).

The question of whether to require conventional fall protection for decking operations was vigorously debated during the SENRAC deliberations. SENRAC reached its position after various contractors, equipment manufacturers and decking workers appeared before the Committee and discussed both the feasibility of conventional fall protection and whether to rely instead on CDZs to protect workers from falls.

When OSHA proposed the standard, we asked the public for information about the feasibility and hazard potential of providing fall protection to deckers (63 FR 43485). Comments were submitted which indicated that some general contractors had successfully employed fall protection systems for decking workers (Ex. 207X; pp. 172–173, 207X; pp. 235–239, 202X; pp. 153–154, 207X; pp. 292–293 and 13–73). However, the evidence and objections to the provision submitted after the proposal were similar to the evidence and objections considered by the Committee during its deliberations. Virtually all the employees who testified or submitted opinions into the record on their experience on the decking issue supported the Committee's recommended provisions for the CDZ alternative to fall protection.

On this record, the Agency defers to the Committee and leaves the provision unchanged in the final rule. Other approaches for protecting decking employees against falls may be possible. However, based on the Agency's concurrence with the negotiated proposal and its reliance on the Committee's expertise, we have decided to promulgate SENRAC's CDZ alternative as proposed.

The CDZ alternative has built-in restrictions and will allow only a small number of workers to work without fall protection. Although the accident data presented to the record shows that decking accidents rank first in fatalities in steel erection, further analysis shows that some of the ''decking'' fatalities involved workers doing other jobs (for example, roofers falling onto unsecured decking; see also Ex. 9–14 and 9–49). The CDZ alternative applies only to workers performing leading edge work and initially attaching the decking. These are the only workers who are allowed to enter a CDZ. We agree with Mr. Bill Shuzman's statement (Ex. 208X; p. 130) that: ''The controlled decking zone deals with a very small percentage of the number of people who are considered deckers. These are the people who do leading edge deck work.'' Further, the CDZ alternative provisions to fall protection apply only while leading edge work is being performed. ''Leading edge'' in this standard has the same meaning as in subpart M, OSHA's general construction fall protection standard. That standard, § 1926.500 (b), states that ''leading edge means the edge of a * * * walking/working surface (such as the deck) which changes location as additional * * * decking [is] placed * * *''. For decking in steel erection, the core ''leading edge'' tasks are lifting decking panels from the bundles placed on the secured decking next to the leading edge, and placing and aligning the panels prior to tack welding. As soon as the decking for the leading edge is finished (placed for fastening), that area no longer qualifies for use of a CDZ, and any employees in the area must be otherwise protected from falls.

The provisions making up this exception clearly limit the exception's application. We emphasize that the CDZ is not a general exception to fall protection requirements for all employees who install decking, or who work in the area while decking is being installed. Paragraph § 1926.760(c) states that a CDZ alternative to fall protection is allowed only for decking employees when metal decking is being initially installed and while that decking material forms the leading edge of a work area.

A core requirement of the CDZ alternative is § 1926.761(c)(3), which specifies that only employees trained in accordance with the standard's CDZ training provisions are allowed in the CDZ. That provision requires that each employee be provided training in ''the nature of the hazards associated with work within a controlled decking zone; and the establishment, access, proper installation techniques and work practices required by § 1926.760(c) and § 1926.754(e). This special CDZ training supplements the required fall hazard training in § 1926.761(a). OSHA believes that the implementation of these new training provisions will improve the safety of all employees who work in areas where decking is being installed. The record contains evidence that some employers are already providing this training. At the hearing Mr. Michael White of the Training Department of the International Association of Bridge, Structural Ornamental and Reinforcing Ironworkers stated that his organization, ''in response to the new training provisions'' has already started to develop specialized training curriculum for CDZ workers and other activities required to be trained under SENRAC's recommended standard. According to the statement read by Mr. White, these training programs ''will be taught at approximately 160 training centers as an integral part of the apprenticeship training and journeyman training conducted at these centers. In addition, this new training curricula will also be used at the annual Ironworkers Instructors Training Program, * * * held * * * for a period of two weeks to train persons who are certified instructors in local and state ironworker training programs through the United States * * * '' (Ex. 208X; pp. 62–63). Mr. Codding (Ex. 208X; p. 65), an employer representative, also testified that he introduced SENRAC's training recommendations on CDZ work and other areas at the annual instructor training referenced by Mr. White. ''There were some 500 participants that I reviewed those (the decking requirements and several of the connecting requirements) with.'' Mr. Codding continued: ''I really want to point out that we as employer contractor representatives have also taken steps to coordinate this training curriculum, which is being developed.''

Paragraph (d) Criteria for Fall Protection Equipment

A new paragraph (d) was added to the final rule to clearly state that the protective systems mentioned in paragraph (a)(1) must conform to the criteria found in subpart M. Several commenters felt that proposed paragraph (a)(2) was too confusing. Some confusion resulted from the proposed rule's requirement that restraint systems meet the requirements

of § 1926.502. The confusion stems from the fact that § 1926.502 does not mention restraint systems.

Final paragraph (d)(1) requires guardrail systems, safety net systems, personal fall arrest systems, positioning device systems and their components to conform to the criteria in § 1926.502. Section 1926.502 does contain requirements for components of personal fall arrest systems, many of which are also used in restraint systems.

Final paragraph (d)(2) clarifies that the components used in a restraint system in steel erection work must meet the requirements in § 1926.502 for those components. Proposed paragraph (a)(2) indicated that the terms ''fall restraint system'' and ''positioning device system'' were interchangeable. Two fall protection consultants, Mr. Dan Paine and Mr. Nigel Ellis, testified that the terms should be distinguished. Mr. Paine describes a restraint system as a means to restrain someone from falling by not allowing them to get to the leading edge (Ex. 207X, pp. 12–13). Mr. Ellis says (Ex. 202X, pp. 128–129) that OSHA should decide whether fall restraint is a means of restricting a person's motion towards an edge or is the same as a work positioning device. He further stated that these systems are poorly understood by the construction industry, manufacturers and by various OSHA offices due to the similarity of their components. Other commenters (Exhibits 13–3, 13–192 and 13–221) expressed concern over allowing workers to fall while wearing a body belt, apparently in reference to the fact that body belts are permitted to be used in positioning devices and restraint systems. They urged consistency between subparts R and M.

The Agency has recognized that restraint systems and positioning devices refer to different types of protective devices. Under subpart M, a positioning device (1) allows an employee to be supported on an elevated, vertical work surface, such as formwork or rebar assemblies; (2) permits the worker to work with both hands free while leaning backwards, and (3) limits a fall to up to two feet. Restraint systems are not mentioned in subpart M. However, the Agency has defined restraint systems in letters of interpretation as systems that prevent workers from being exposed to any fall. Restraint systems may be used on either a horizontal or vertical work surface.

In brief, a positioning device enables an employee to work in a position that allows the employee to fall, but only up to two feet. A fall restraint system prevents the employee from reaching an open side or edge, thus preventing the employee from falling.

Because the Agency has correctly distinguished these devices in the past, the final rule has been changed to be consistent with these distinctions. Both systems must use components that comply with § 1926.502. We are reprinting the criteria from § 1926.502 in Appendix G to assist employers and employees.

Final rule paragraph (d)(3) requires that perimeter safety cables must comply with the relevant criteria for guardrail systems in § 1926.502. E–M–E, Inc. (Ex. 202X; p. 65) testified that other trades often use the cables to climb or tie off to. Perimeter safety cables must not be used as an anchorage point for personal fall arrest systems unless they were engineered to serve that purpose.

The proposed rule included perimeter safety cables as one of the specified methods of fall protection and specified that the cables consist of ½-inch wire rope or equivalent. Final paragraph (d)(1) requires that if perimeter safety cables are used, they must consist of ¼ inch wire rope or its equivalent. OSHA retained the requirement for the cables to be made of wire due to the higher probability that these cables may be struck by loads or exposed to the heat of welding on steel structures.

Many commenters asked to change the ½ inch diameter requirement for perimeter cables to ¼ inch. Arguments were made that some companies have already purchased ¼ inch cable and a switch to ½ inch would be costly. We presume that those companies have invested in ¼ inch cable to comply with Subpart M, which requires ¼ inch cables for fall protection systems, for their non-steel erection work. Vulcraft (Ex. 13–4) and Fred Weber, Inc. (Ex. 13–218) had concerns that if the ¼ inch cable requirement were switched, those that have invested in ⅜ inch would have to switch to ¼ inch.

The final rule in paragraph § 1926.760(d)(3) explicitly states that perimeter safety cables shall meet the criteria for guardrail systems in § 1926.502(b) (subpart M). This was not clear in the proposed regulatory text as pointed out by some rulemaking participants. Mr. Bob Emmerich, AGC of Wisconsin, testified (Ex. 201X, p. 78, pp. 88–90, pp. 107–108) that his organization agreed with the proposal, but felt the requirement should be consistent with subpart M. He stated that confusion could be avoided if the criteria for perimeter safety cables in subpart R mirrored that in subpart M's guardrail provision. Others also advocated consistency with subpart M (Exs.13–173; 13–210 and 13–215).

Under Subpart M, § 1926.502 (b)(9), top and midrail cables must be at least ¼ inch (''to prevent cuts and lacerations''), but they may be thicker. So, employers operating under Subpart M now, with large stocks of ¼ inch cable, will not have to purchase ½ inch cable if they begin working on steel erection jobs.

A safety consultant (Ex. 13–151) suggested that instead of specifying a minimum diameter, we specify the strength, grade, lay and cores of the cable, as well as the spacing between the supports. We point out that, apart from the ¼ inch diameter requirement, subpart M specifies strength and deflection performance requirements in lieu of specifications.

Paragraph (e) addresses the need to ensure that fall protection equipment is maintained even after steel erectors have completed their work. Usually, perimeter safety cables are initially installed and maintained by the steel erector, but the cables remain on site after steel erection work is completed. With this provision, the fall protection equipment will only be left in place if the controlling contractor (or its authorized representative) has taken responsibility for ensuring that it will be properly maintained. Without this provision, the fall protection could fall into disrepair and become ineffective. This requirement is fairly similar to the AISC Code of Standard Practice (Ex. 9–36, p. 15) which states:

> When safety protection provided by the erector is left remaining in an area to be used by other trades after steel erection activity is completed, the owner shall be responsible for accepting and maintaining this protection, assuring that it is adequate for the protection of all other affected trades, assuring that it complies with all applicable safety regulations when being used by other trades, indemnifying the erector from any damages incurred as a result of the safety protection's use by other trades, removing the safety equipment when no longer required and returning it to the erector in the same condition as it was received.

Commenters in support of the provision stated that steel erectors were concerned that if they left their fall protection in place after finishing their work, nobody would maintain the fall protection, and they would be held liable. OSHA agrees with the commenters that this could give employers of other trades a false sense of security, and could cause employees to be injured.

Other commenters asserted that controlling contractors should not be required to provide fall protection to the employees of other employers. First, this provision does not require the

controlling contractor to accept responsibility for the fall protection equipment. The controlling contractor has the option of refusing to accept responsibility. If it refuses to accept responsibility, then the fall protection equipment must be removed. Second, the controlling contractor already has obligations with respect to the safety of employees of other employers under the Agency's multi-employer policy. A controlling contractor may refuse to accept responsibility for the equipment and require the other trades to erect and maintain their own fall protection equipment. Such a decision would be consistent with both that policy and this provision. As a practical matter, it was SENRAC's view that the controlling contractor is in the best position to make the decision about whether to accept responsibility for the equipment, since it has authority over the site and can best coordinate the other trades and deal with the ramifications of this type of decision. The record does not show that view to be unreasonable.

Section 1926.761 Training

The OSHA steel erection standard has many new requirements involving more widespread use of personal fall protection equipment and special procedures for making multiple lifts, for decking activities in controlled decking zones and for connecting. SENRAC and OSHA recognized the need for a separate training section to address these and other requirements. The requirements in § 1926.761 supplement OSHA's general training and education requirements for construction contained in § 1926.21.

Since the employer can choose the provider, method and frequency of training that are appropriate for the employees being trained, the employer has flexibility in developing and implementing a training program. The program must meet the requirements of this section, and each employee must be provided the training prior to exposure to the hazard. The employer can choose the provider, method and frequency of training that are appropriate for the employees being trained. The provider may be an outside, professional training organization or other qualified entity, or the employer may develop and conduct the training in-house.

A commenter (Ex. 13–246) pointed out that the training provisions do not require that the employer verify that the employees understand what they have been taught. Another commenter (Ex. 13–216) recommended that OSHA's goal should be to mandate that ironworkers are trained and certified as competent by their employer.

The requirement to provide training is met only when the training is effective in providing the knowledge stipulated in these provisions. An effective training program necessarily involves some means of determining whether the instruction is understood by the employee. This can be done in a variety of ways, such as formal oral or written tests, observation, or through discussion. The previous commenter added that retraining is not addressed but needs to be included with a requirement for annual refresher training with verification (Ex. 13–246). Another commenter (Ex. 13–354) asserted that there is no mention of prior training received from previous employers. He argued that if an ironworker has been trained by his previous employers to possess a certain skill or skills (for example, a connector), it seems costly and unnecessary to require the ironworker to be re-trained prior to going to work for another employer.

While retraining/refresher training is not specifically addressed, the employer is responsible for making sure that it has programs necessary to comply with the training requirements in § 1926.21(b)(2): ''The employer shall instruct each employee in the recognition and avoidance of unsafe conditions and the regulations applicable to his work environment to control or eliminate any hazards or other exposure to illness or injury.'' Steel erection involves progressive sequences of erection, so that the work environment on any one day may involve entirely different or unique new hazards than the day before and that new employees may enter the erection process when it is already underway. In order to apply § 1926.21 during steel erection activities, an employer would have to assess the type of training needed on a continuing basis as the environment and changes in personnel occur. It is the employer's responsibility to determine if an employee needs retraining in order to strengthen skills required to safely perform the assigned job duties, and whenever the work environment changes to include newly recognized or encountered hazards. This is a key element in the employer's accident prevention program.

Where an employer hires a worker, such as a connector, who is already trained and skilled, OSHA anticipates that the employee's high level of knowledge will be readily apparent and easily ascertained by informal discussion and observation.

A commenter (Ex. 13–216) suggested that the complexity of the steel erection standard will require extensive training to ensure that ironworkers are aware of the new way of performing their work. The Safety Advisory Committee of the Structural, Ornamental, Rigging and Reinforcing Steel Industry (SAC) (Ex. 208X; p. 68) commented that they support the training requirements as proposed.

OSHA agrees that additional training will be required to ensure that the employees are aware of and understand the regulations applicable to their work environment. However, the Agency believes that the new requirements in this rule are needed to make steel erection safer, and the additional training requirements will play a major role in achieving that increased safety.

Paragraph (a) requires that all training required by this section be provided by a qualified person. As discussed earlier, a ''qualified person,'' is defined in § 1926.751 as one who, by possession of a recognized degree, certificate, or professional standing, or who by extensive knowledge, training, and experience, has successfully demonstrated the ability to solve or resolve problems relating to the subject matter, the work, or the project.

Paragraphs (b)(1) through (b)(5) require employers to provide a training program for all employees exposed to fall hazards. The program must include training and instruction in recognition and identification of fall hazards in the work area [(b)(1)]; the use and operation of guardrail systems, personal fall arrest systems, fall restraint systems, safety net systems, controlled decking zones and other protection to be used [(b)(2)] ; the correct procedures for erecting, maintaining, disassembling, and inspecting the fall protection systems to be used [(b)(3)]; the procedures to be followed to prevent falls to lower levels and through or into holes and openings in walking/working surfaces and walls [(b)(4)]; and the fall protection requirements of § 1926.760 [(b)(5)].

In the proposal, paragraph (b)(2) stated that training had to be given with respect to perimeter safety cables as well as guardrails. The reference to perimeter safety cables in the training section has been deleted in the final rule because, under the final rule, perimeter safety cables are considered guardrails (under § 1926.760 (b)(3), they must meet the requirements for guardrails in § 1926.502). There were no comments received regarding these provisions, and no other changes were made in the final rule.

Paragraph (c) requires specialized training for employees engaged in multiple lift rigging procedures, connecting activities and work in controlled decking zones, due to the

hazardous nature of these activities. There were no comments received regarding the provisions in § 1926.761(c)(1), (c)(2) and (c)(3), and they are promulgated without change.

Paragraphs (c)(1)(i) and (c)(1)(ii) require additional training for employees performing multiple lift rigging in accordance with the provisions in § 1926.753(e). The special training includes, at a minimum, the nature of the hazards associated with multiple lifts; and the proper procedures and equipment to perform multiple lifts.

Paragraphs (c)(2)(i) and (c)(2)(ii) require employers to ensure that each connector has been provided training in the hazards associated with connecting, and in the establishment, access, proper connecting techniques and work practices required by § 1926.760(b) (fall protection) and § 1926.756(c) (double connections).

Paragraphs (c)(3)(i) and (c)(3)(ii) require employers to provide additional training for controlled decking zone employees. The training must cover the hazards associated with work within a controlled decking zone, and the establishment, access, proper installation techniques and work practices required by § 1926.760(b) (fall protection) and § 1926.754(e) (decking operations).

Appendices to Subpart R

The following appendices neither create additional obligations nor eliminate obligations otherwise contained in the standard. They are intended to provide useful, explanatory material and information to employers and employees who wish to use it as an aid to understanding and complying with the standard.

Appendix A to Subpart R—Guidelines for Establishing the Components of a Site-Specific Erection Plan (Non-Mandatory). As explained in the discussion for the section governing site-specific erection plans (§ 1926.752), this appendix was developed by SENRAC as a non-mandatory set of guidelines to assist employers in complying with the requirements of final paragraph § 1926.752(e). If an employer follows these guidelines to prepare a site-specific erection plan, it will be deemed as complying with the requirements of paragraph § 1926.752(e). No comments were received on this Appendix and it remains unchanged from the proposed rule except for adding ''anchor rod'' in (c)(3)(iii) to be consistent with the changes made to § 1926.755 of the final rule.

Appendix B to Subpart R—Acceptable Test Methods for Testing Slip-Resistance of Walking/Working Surfaces (Non-Mandatory). Appendix B is provided to serve as a non-mandatory guide to assist employers in complying with the requirements of final rule paragraph § 1926.754(c)(3). The two nationally recognized test methods referred to in appendix B, ASTM F1677–96 (Standard Test Method for Using a Portable Inclineable Articulated Strut Slip Tester) and ASTM F1679–96 (Standard Test Method for Using a Variable Incidence Tribometer), provides the protocol for testing coatings for skeletal structural steel surfaces to obtain the documentation or certification required by § 1926.754(c)(3). No comments were received on this Appendix and it remains unchanged from the proposed rule except for correcting the cite to ASTM F1677–96 which was incorrectly identified as ASTM F1678–96 in the proposed rule.

Appendix C to Subpart R—Illustrations of Bridging Terminus Points (Non-Mandatory). This appendix is a non-mandatory guide to assist employers in understanding the requirements of section §§ 1926.757(a)(10) and 1926.757(c)(5). The illustrations show several (but not all) common bridging terminus points. This Appendix remains unchanged from the proposed rule except that a reference was added to § 1926.757(a)(10) which was overlooked in the proposed rule and correcting an inaccurate reference to § 1926.757(c)(3) in the proposed rule. This appendix is provided to employers as a non-mandatory guide to assist in complying with the requirements of sections 1926.757(a)(10) and 1926.757(c)(5).

The Agency received two written comments addressing this appendix. One commenter (Ex. 13–308) stated that: (1) The anchors indicated in many of the figures should be labeled as ''appropriate anchors'' rather than ''lag with shield or embedded anchor;'' (2) lag shield anchors are not always appropriate; and (3) the notation ''looped around top chord'' should be changed to ''wrapped around top chord.'' The other commenter (Ex. 13–151) identified a number of deficiencies in the illustrations.

The Agency's engineers reviewed the comments on the illustrations and believe the illustrations are accurate illustrations of some common bridging terminus points. The titles of the illustrations are terms that are commonly understood in the industry. These illustrations were not meant to cover all construction site situations.

Therefore, the agency has not changed the illustrations or the titles. The proposed text in Appendix C is adopted as a nonmandatory reference.

Appendix D to Subpart R—Illustration of the Use of Control Lines to Demarcate Controlled Decking Zones (CDZs) (Non-Mandatory). Appendix D is provided to serve as a non-mandatory guide to assist employers in complying with the requirements of final rule paragraph § 1926.760(c)(3). If the employer follows these guidelines to establish a control line to demarcate a CDZ, OSHA will accept the control line as meeting the requirements of paragraph § 1926.760(c)(3). This appendix neither creates additional obligations nor eliminates obligations otherwise contained in the standard. It is intended to provide useful explanatory material and information to employers and employees who wish to use it as an aid to understanding and complying with the standard. No comments were received on this appendix and it remains unchanged from the proposed rule.

Appendix E to Subpart R—Training: (Non-Mandatory). Appendix E is provided to serve as a non-mandatory guide to assist employers in complying with the requirements of final paragraph § 1926.761. Even before the existence of OSHA, the Ironworkers International Union provided apprenticeship training in steel erection to its members. This training has been approved by the U.S. Department of Labor's Bureau of Apprenticeship Training for over forty years. As soon as this program is updated to reflect the requirements of this new subpart R, training under this program will be deemed as complying with the training requirements of § 1926.761. As stated in Article XI of the current approved National Apprenticeship and Training Standards for Ironworkers:

> The [Ironworkers Joint Apprenticeship] Committee shall seek the cooperation of all employers to instruct the apprentices in safe and healthful work practices and shall insure that the apprentices are trained in facilities and other environments that are in compliance with either the occupational safety and health standards promulgated by the Secretary of Labor under [the OSH Act] or state [plan] standards* * * (Ex. 9–139; p. 8).

Training approved by the U.S. Department of Labor's Bureau of Apprenticeship Training is not the only training that OSHA will accept under this standard. Employers may choose to provide their own training, provided that it fulfills the requirements of § 1926.761.

As proposed, Appendix E stated: ''The training requirements of § 1926.761 will be deemed to have been met if employees have completed a training course on steel erection, including instruction in the provisions of this standard, that has been approved by the U.S. Department of Labor's Bureau of Apprenticeship.''

One commenter (Ex. 13–222) indicated that there are many other avenues for training that are not approved by the U.S. Department of Labor's Bureau of Apprenticeship Training, such as trade associations, training organizations, consultants and in-house training programs; yet the appendix does not include any sources other than those approved by the U.S. Department of Labor's Bureau of Apprenticeship Training.

Another commenter (Ex. 13–210) expressed a similar concern, stating that the Appendix implies that the only training that is acceptable is training done through an apprenticeship program approved by the U.S. Department of Labor's Bureau of Apprenticeship Training. The commenter recommended that trade associations, training organizations, consultants and in-house training programs be included in Appendix E as acceptable/recognized training entities; if not, then Appendix E should be omitted. Another commenter (Ex. 201X; p. 82) recommended that OSHA either state in Appendix E that ''employers may choose to provide their own training, provided that it fulfills the requirements of § 1926.761,'' or omit appendix E.

OSHA has decided to retain appendix E as proposed. We emphasize that appendix E does not require that training be approved by the U.S. Department of Labor's Bureau of Apprenticeship Training. Training provided by others is sufficient if it meets the requirements of § 1926.761. The Appendix simply identifies certain training—training approved by the U.S. Department of Labor's Bureau of Apprenticeship Training—that OSHA deems acceptable to meet the requirements of § 1926.761. It is appropriate for OSHA to acknowledge a training program that is administered through another office within the Department of Labor.

Training approved by the U.S. Department of Labor's Bureau of Apprenticeship Training may be used as a guide for developing and assessing other training programs. The proposed text in Appendix E is adopted as proposed.

Appendix F to Subpart R—Perimeter Columns (Non-Mandatory). Since perimeter safety cables are the method prescribed by § 1926.756(e) for guarding of perimeters, final rule appendix F provides guidance for installing them. As proposed, the first part of appendix F stated that, ''in multi-story structures, the project structural engineer of record (SER) may facilitate the ease of erecting perimeter safety cables, where structural design allows, by placing column splices sufficiently high so as to accommodate perimeter safety cables located at 42–45 inches above the finished floor. The SER may also consider allowing holes to be placed in the column web, when the column is oriented with the web perpendicular to the structural perimeter, at 42–45 inches above the finished floor and at the midpoint between the finished floor and the top cable * * *''.

The National Council of Structural Engineers (Ex. 13–308) suggested that the reference to the SER be removed and replaced by a reference to a ''competent person.'' Commenters, including a staff member from Minnesota DOT-Office of Bridges and Structures (Ex. 13–359), stated that the erector is the most competent party when it comes to erecting perimeter cables. In their view it has been a responsibility written into their contracts in the past and the responsibility should remain with them. It was also argued in testimony (201X; p. 49) that if SERs were to follow the guidelines in appendix F, they would be taking on the responsibility of ensuring that the components of a perimeter cable system comply with the requirements of subpart R, which would raise liability issues.

Apart from these concerns, the Agency has determined that this first part of the appendix could be confusing. The appendix may give the impression that having columns extend a minimum of 48 inches above the finished floor to permit installation of perimeter safety cables prior to the erection of the next tier is suggested but not required. That is not the case—it is required by § 1926.756(e)(1). The standard also requires perimeter columns to be supplied with holes or other devices in or attached to perimeter columns at 42–45 inches above the finished floor and the midpoint between the finished floor and the top cable to permit installation of perimeter safety cables (except where constructibility does not allow). Therefore, this first part of the appendix has been omitted in the final rule.

The rest of the proposed appendix does not refer to the SER. It is being retained because it contains design suggestions that would facilitate compliance with the requirements of § 1926.756(e). The appendix recommends that column splices be placed at every other or fourth levels, as design allows.

Appendix G to Subpart R—Fall Protection Systems Criteria and Practices from § 1926.502 (Non-Mandatory). Appendix G is provided to assist employers in complying with the requirements of § 1926.760(d). Appendix G restates paragraphs (b) through (e) of § 1926.502, which provide the criteria for guardrail systems, safety net systems, personal fall arrest systems and positioning device systems. These criteria are referenced by § 1926.760(d), and are included here for the convenience of employers and employees.

Appendix H to Subpart R—Double Connections (Non-Mandatory). Appendix H illustrates two methods (clipped end connection and staggered connection) that an employer may use to comply with the requirement in § 1926.756(c)(1) by maintaining at least a one bolt connection with its wrench tight nut while making a double connection. These two methods are not the only ways to comply with the standard.

These illustrations were added in response to a commenter's suggestion that OSHA add an illustration to show an example of a clipped end connection (Ex. 13–207). Clipped end and staggered connections are sound, engineered methods for maintaining a one bolt connection throughout the double connection process. OSHA is adding an illustration of a staggered connection as well, which is also an effective means of maintaining the one bolt connection.

V. Summary of the Final Economic and Regulatory Flexibility Analysis

Introduction

This final standard is a significant regulatory action under Executive Order (EO) 12866 and a major rule under the Congressional Review Act provisions of the Small Business Regulatory Enforcement Fairness Act. Accordingly, OSHA has developed a final economic analysis (FEA)(Ex. 83) of the costs, benefits, and regulatory and non-regulatory alternatives of the rule, as required by the EO. The FEA revises OSHA's preliminary economic analysis (Ex. 11) and is based upon a thorough review of the rulemaking record. This section of OSHA's notice of final rulemaking summarizes the Agency's economic analysis of the final steel erection standard.

The Regulatory Flexibility Act of 1980, as amended in 1996, requires OSHA to determine whether the Agency's regulatory actions will have a

significant impact on a substantial number of small entities. Making such a determination for this final standard required OSHA to perform a screening analysis to identify any such impacts. OSHA's screening analysis indicated that the rule might, under two worst-case scenarios, have significant impacts on a substantial number of small entities. Accordingly, OSHA has prepared a Final Regulatory Flexibility Analysis, summarized below, to accompany the final steel erection rule.

OSHA's final economic analysis and final regulatory flexibility analysis include a description of the industries potentially affected by the standard; a summary of the major changes between OSHA's existing steel erection standard (subpart R of Part 1926) and the final rule; an evaluation of the risks addressed; an assessment of the benefits attributable to the final standard; a determination of the technological feasibility of the new requirements; an estimate of the costs employers will incur to comply with the standard; a determination of the economic feasibility of compliance with the standard; and an analysis of the potential worst-case economic and other impacts associated with this rule, including those on small businesses. Below are summaries of each of the major sections of OSHA's final economic analysis.

Affected Industries

This final steel erection standard affects industries and establishments within the construction industry. Table 1 presents the industry groups in construction that will be directly affected by the final standard. Construction employers who are subject to the rule because they have employees engaged in steel erection activities are concentrated within SIC 1791, Structural Steel Erection, an industry with 4,675 establishments and 55,965 employees in 1998, as reported by Dun & Bradstreet [D&B, 1998]. Within this industry, 3,898 establishments, or 83 percent of the total number of establishments, employed nineteen or fewer employees in 1998, while 3,238 establishments (69 percent) employed nine or fewer employees. SIC 1791, however, also includes employers and workers who perform construction activities other than steel erection, notably pre-cast concrete erection. Further, contractors primarily engaged in other activities sometimes have employees engaged in steel erection. Thus, any comprehensive profile of the steel erection industry must, in addition to examining affected industry groups, focus on the type of work and the trade of the workers engaged in this form of construction.

TABLE 1.—INDUSTRY GROUPS IN CONSTRUCTION POTENTIALLY AFFECTED BY THE FINAL STEEL ERECTION STANDARD

SIC	Industry group	Iron workers [a]	Establishments with 1–9 employees		Establishments with 1–19 employees		Establishments with 1–99 employees		Establishments with 100 + employees		All Establishments [b]	
			Number of establishments	Total employment	Number of establishments	Total employment	Number of establishments	Total employment	Number of establishments	Total employment	Number of establishments	Total industry employment
15	Building Construction—General Contractors and Operative Builders	19,310	273,905	765,249	291,906	989,256	302,859	1,362,573	925	169,293	305,474	1,531,866
152	General Building Contractors—Residential Buildings	2,310	216,235	581,751	226,038	702,822	230,404	843,782	222	38,239	231,632	882,021
153	General Building Contractors—Operative Builders	50	17,995	48,256	19,123	62,040	19,879	86,737	52	9,422	20,049	96,159
154	General Building Contractors—Nonresidential Buildings	16,950	39,675	135,242	46,745	224,394	52,576	432,054	651	121,632	53,793	553,686
1541	Industial Buildings and Warehouses	.....	8,198	23,208	8,755	30,164	9,140	44,564	54	9,543	9,290	54,107
1542	Nonresidential Buildings, other than in SIC 1541	.....	31,477	112,034	37,990	194,230	43,436	387,490	597	112,089	44,503	499,579
16	Heavy Construction other than Building Construction	4,600	34,243	114,530	40,506	194,060	47,406	454,086	1,130	246,814	51,039	700,900
161	Highway and Street Construction, except Elevated Highways	540	13,055	43,972	15,320	72,574	17,173,932	173,347	478	100,804	18,735	274,151
162	Heavy Construction, except Highway and Street Construction	4,060	21,188	70,558	25,186	121,486	29,474	280,739	652	146,010	32,304	426,749
1622	Bridge, Tunnel, and Elevated Highway Construction	.....	582	2,295	817	5,263	1,191	19,627	76	14,597	1.464	34,224
1623	Water, Sewer, Pipeline, and Communications and Power Line Construction	.....	6,730	26,237	8,961	54,908	11,488	148,642	304	53,651	13,575	202,293
1629	Heavy Construction, Not Elsewhere Classified	.....	13,876	42,026	15,408	61,315	16,795	112,470	272	77,762	17,265	190,232
17	Construction—Special Trade Contractors	32,930	553,399	1,619,537	602,349	2,240,163	636,193	3,407,594	2,560	458,521	641,897	3,866,115
171	Plumbing, Heating and Air-Conditioning	640	115,500	345,897	126,268	483,637	133,483	735,986	563	100,757	134,655	836,743
174	Masonry, Stonework, Tile Setting, and Plastering	580	45,405	133,886	50,217	194,623	54,367	339,551	372	60,803	54,991	400,354
175	Carpentry and Floor Work	1,100	48,720	126,525	51,184	157,737	52,595	204,788	114	19,147	52,896	223,935
176	Roofing, Siding, and Sheet Metal Work	3,900	39,893	118,921	43,650	166,437	46,331	258,269	124	17,592	46,681	275,861
177	Concrete Work	250	23,575	78,296	26,764	118,177	28,801	185,887	118	18,536	29,094	204,423
179	Miscellaneous Special Trade Contractors	26,440	109,187	317,915	118,213	431,565	124,083	628,259	397	81,002	125,195	709,261
1791	Structural Steel Erection	.....	3,238	11,259	3,898	19,712	4,544	42,215	73	13,750	4,675	55,965
	Construction Totals	56,840	861,547	2,499,316	934,761	3,423,479	986,458	5,224,253	4,615	874,628	998,410	6,098,881

[a] U.S. Department of Labor, Bureau of Labor Statistics, Occupational Employment Statistics Survey, 1998.

[b] For some industry groups, Dun &ampi Bradstreet identified a small percentage of establishments and sales that could not be classified by establishment size. OSHA included these data in the industry totals in this table.

Source: U.S. Department of Labor, OSHA, Office of Regulatory Analysis, based on Dun & Bradstreet, National Profile of Businesses software, Dun &ampi Bradstreet Information Services, 1998.

The workers directly benefitting from the final standard are identified in occupational surveys as structural metal workers; in the industry, they are known as iron workers. According to the Bureau of Labor Statistics' Occupational Employment Statistics Survey [BLS, 1998], there were 56,840 structural metal workers in construction in 1998, the majority of whom are found in SIC 179, Miscellaneous Special Trade Contractors (26,440 structural metal workers), and SIC 154, Contractors—Nonresidential Buildings (16,950 structural metal workers) (Table 1). For this final economic analysis, OSHA used the BLS employment total for structural metal workers to estimate the number of iron workers potentially affected by the final rule in its benefits assessment and cost analysis.

Final Changes to OSHA's Steel Erection Standard

This final steel erection standard modifies and strengthens the steel erection standard it replaces in a number of areas. For example, the final standard includes a scope section that identifies the types of construction projects and activities subject to the rule. Structures excluded from coverage under the scope of the standard are steel electrical transmission towers, steel communication and broadcast towers, steel water towers, steel light towers, steel tanks, and reinforced and pre-cast concrete structures. The final rule also includes a new section addressing site layout, site-specific erection plans, and construction sequence. Other revisions to the existing standard include:

- Explicit requirements for hoisting and rigging and the protection of workers and the public from the hazards of overhead loads;
- Additional and strengthened requirements for the structural steel assembly of beams, columns, joists, decking, and systems-engineered metal buildings, including provisions for the protection of employees from tripping hazards and slippery surfaces on walking/working surfaces;
- Modified and clarified requirements for fall protection for connectors, decking assemblers, and other iron workers during the erection of structural steel; and
- New requirements for training in fall hazards, multiple lift rigging, connecting, and controlled decking zones.

For the final economic analysis, OSHA identified those requirements of the final rule that would create substantial impacts or generate substantial benefits for members of the regulated community, including workers. For many provisions of the rule, current industry practice in many establishments is adequate to meet these requirements. OSHA estimates that current industry practice meets the final regulatory requirements for 50 percent to 98 percent of affected projects with regard to providing fall arrest systems (*i.e.,* 50 percent—98 percent of affected workers currently are supplied with this equipment, with the percentage increasing with the height of the building), and that current industry practice in the use of personnel nets is such that 20 percent of affected projects meet the final regulatory requirements; 75 percent of workers receive safety training that would meet the final regulatory requirements; nearly 100 percent of all construction uses 2-rod (bolt) column anchorage (but only 10 percent use 4-rod anchorage); and 50 percent to 98 percent of projects, depending on building height, already meet the final regulatory requirements for guardrail systems. OSHA anticipates that the final standard's requirements pertaining to overhead loads, trips and slips, falls, falling objects, collapses, and worker training will both generate substantial benefits for affected employers and impose costs on them.

Evaluation of Risk and Potential Benefits

For this final economic analysis, OSHA developed a profile of the risks facing iron workers who are performing steel erection operations. OSHA's risk profile for steel erection is based on data from the Bureau of Labor Statistics' National Census of Fatal Occupational Injuries, data from the Bureau's Survey of Occupational Injuries and Illnesses, and an analysis by a SENRAC workgroup of OSHA fatality/catastrophe inspection data obtained from the Agency's Integrated Management Information System.

OSHA anticipates that the final standard will significantly reduce the number of accidents and fatalities currently reported in the steel erection industry, particularly those accidents caused by falls from elevated levels and by objects such as dislodged structural members and building materials striking workers. OSHA believes that the more protective requirements for fall protection, structural stability, and training in the final standard will help to save lives and prevent injuries in the iron worker workforce. For accidents involving events or exposures potentially addressed by the final standard, OSHA estimates that approximately 35 fatalities and 2,279 lost-workday injuries currently occur annually among structural metal workers (see Table 2, below); this is the current industry risk baseline used in this analysis. OSHA projects that full compliance with the final standard would prevent 30 of these fatalities and 1,142 of these lost-workday injuries. Eight of these fatalities and 303 serious injuries could be prevented if employers were currently in compliance with OSHA's existing steel erection standard. The final standard will thus prevent an additional 22 fatalities and 838 injuries that would not be prevented even by full compliance with the existing standard. Further, OSHA believes that issuance of this new final steel erection standard will enhance compliance even with provisions that were included in the existing standard because the final revision allows for more flexibility in compliance, is easier to understand, and is effectively targeted toward steel erection hazards.

TABLE 2.—SUMMARY OF ESTIMATED NUMBER OF DEATHS AVERTED AND INJURIES AVOIDED BY FULL COMPLIANCE WITH THE FINAL STEEL ERECTION STANDARD

	Number of fatalities and lost-workday injuries currently occurring among iron workers (a)	Number of fatalities and lost-workday injuries preventable by compliance with the existing standard	Additional number of fatalities and lost-workday injuries preventable by compliance with the final standard	Total number of fatalities and lost-workday injuries preventable by compliance with the existing and final standards	Number of fatalities and lost-workday injuries judged not to be preventable by either standard based on analysis of accident and fatality data
Fatalities	35	8	22	30	5
Lost-Workday Injuries	2,279	303	838	1,142	1,137

Note: Figures in the rows may not sum to totals due to rounding.
(a) Includes fatalities and injuries judged to be potentially preventable by the final standard.
Source: U.S. Department of Labor, OSHA, Office of Regulatory Analysis.

In addition to saving lives and improving overall safety in the steel erection industry, OSHA believes that the final standard, once fully implemented by erection contractors, will yield substantial cost savings to parties within and connected with the industry and ultimately to society as a whole. These monetized benefits take the form of reductions in employer, employee, and insurer accident-related costs in several areas: the value of lost output associated with temporary total disabilities and permanent partial disabilities; reductions in accident-related medical costs; reductions in administrative expenses incurred by workers' compensation insurance providers (including employers who self-insure); and indirect costs related to productivity losses to other workers, work stoppages, and the conduct of accident investigations and reports. Applying data from the construction and insurance industries on the direct costs of accidents and data from the literature on the indirect costs of accidents and other tort- and administrative-related costs to OSHA's estimate of avoided injuries (see Chapter III in the final economic analysis), the Agency has monetized the value of the cost savings employers and society will accrue by avoiding these injuries. The monetized benefits therefore underestimate the true benefits that will be realized by the standard. They also do not, in accordance with Agency policy, attempt to place a monetary value on the lives the final rule will save. These benefits estimates are thus gross underestimates of the true benefits that will be realized by the standard. OSHA estimates that annual cost savings of $10.4 million would result from full compliance with the current rule and an additional $29.1 million would be saved as a result of full compliance with the final rule (Table 3).

TABLE 3.—SUMMARY OF ANNUAL INCREMENTAL MONETIZED BENEFITS OF PREVENTABLE LOST-WORKDAY INJURIES ATTRIBUTABLE TO THE FINAL STEEL ERECTION STANDARD

Lost Output Associated with Temporary Disabilities	$4,397,104
Lost Output Associated with Permanent Disabilities	14,586,035
Medical Costs	4,009,699
Insurance Costs (Administrative)	2,437,064
Indirect Costs	3,686,840
Costs Associated with Liability Claims Avoided	N/Q
Total Cost Savings	29,116,743

N/Q—Not Quantified

Source: U.S. Department of Labor, OSHA, Office of Regulatory Analysis.

In addition to these monetized benefits, cost savings to employers attributable to a decline in the number of third-party liability suits can be expected. Although quantification of these tort-related legal defense costs and dollar awards is difficult because of the lack of data, OSHA believes that these employer costs are substantial and would be reduced significantly through compliance with the final standard.

Technological Feasibility and Compliance Costs

Consistent with the legal framework established by the OSH Act and court decisions, OSHA has assessed the technological feasibility of the final steel erection standard. The final rule clarifies and strengthens the Agency's existing standard, provides more stringent and specific requirements in some areas, and includes requirements for some steel erection hazards newly addressed by the Agency. Many of the final revisions are consistent with current construction means and methods used by leading firms within the steel erection industry. The success of these firms in this competitive industry demonstrates that the requirements of the final standard can be met with existing equipment and production methods. Moreover, the final standard is based on a consensus draft recommended to the Agency by a negotiated rulemaking committee consisting of divergent industry interests—including small employers—who would be affected by any changes to subpart R. Among these changes, addressing ironworker activity on walking and working surfaces is an innovative approach to safety that requires that coatings of structural members meet a standard for slip-resistance. Evidence from SENRAC meetings and elsewhere in the record point to the feasibility of this standard (see the discussion on this provision in Section IV, Summary and Explanation of the Rule). In this and other areas in the steel erection draft, the committee reached consensus on the language, thereby implicitly acknowledging the feasibility of the final revisions to the standard. Therefore, OSHA has determined that the final steel erection standard is technologically feasible.

OSHA developed estimates of the costs of compliance for construction employers subject to the final standard; OSHA's analysis is based on the preliminary economic analysis and additional data gathering and analysis. OSHA estimated annualized compliance costs for two compliance scenarios: (1) Costs to achieve compliance with OSHA's existing steel erection standard, and (2) costs to achieve compliance with the final standard. OSHA's cost estimates take into account the extent of current industry compliance, i.e., the extent to which employers are already in compliance with the requirements of OSHA's existing standard and with the requirements of the final steel erection standard. Accounting for these costs, i.e., subtracting them from the costs attributed to the final standard, is important because only those costs employers would actually incur to come into compliance with the final standard are properly attributed to that standard.

Table 4 presents OSHA's annualized compliance cost estimates, by provision or safety control, for establishments in the industries subject to the final standard.

TABLE 4.—ANNUALIZED COMPLIANCE COSTS OF THE FINAL STEEL ERECTION STANDARD BY INDUSTRY GROUP AND CONTROL [a]

[1998 dollars]

SIC	Industry group and size	Controls									Total
		Fall arrest systems	Personnel nets	Guardrails	Anchor rods (bolts)	Joist erection	Slip-resistant surfaces	Concrete curing tests	Training	Record-keeping	
152	General Building Contractors–Residential Buildings:										
	Establishments with 1–9 Employees	330,947	(119,016)	67,329	252,129	445,054	679,763	94,408	23,177	32,540	1,806,330
	Establishments with 1–99 Employees	188,427	(67,763)	38,334	143,551	253,395	387,028	53,752	13,196	18,527	1,028,447

TABLE 4.—ANNUALIZED COMPLIANCE COSTS OF THE FINAL STEEL ERECTION STANDARD BY INDUSTRY GROUP AND CONTROL [a]—Continued

[1998 dollars]

SIC	Industry group and size	Controls									Total
		Fall arrest systems	Personnel nets	Guardrails	Anchor rods (bolts)	Joist erection	Slip-resistant surfaces	Concrete curing tests	Training	Record-keeping	
	Establishments with 100+ Employees	395,642	(142,282)	80,491	301,417	532,056	812,647	112,863	27,708	38,901	2,159,442
	All Establishments	584,069	(210,045)	118,825	444,968	785,450	1,199,675	166,615	40,904	57,428	3,187,889
154	General Building Contractors–Nonresidential Buildings:										
	Establishments with 1–9 Employees	850,282	(305,781)	23,575	647,780	1,143,451	1,746,476	242,556	59,547	83,603	4,491,489
	Establishments with 1–99 Employees	2,870,887	(1,032,437)	79,598	2,187,159	3,860,739	5,896,787	818,964	201,055	282,276	15,165,028
	Establishments with 100+ Employees	1,414,816	(508,800)	39,227	1,077,865	1,902,629	2,906,024	403,598	99,083	139,110	7,473,551
	All Establishments	4,285,702	(1,541,237)	118,825	3,265,024	5,763,368	8,802,811	1,222,562	300,137	421,386	22,638,579
161	Highway and Street Construction, except Elevated Highways:										
	Establishments with 1–9 Employees	38,461	(13,831)	7,825	29,301	51,722	78,999	10,972	2,694	3,782	209,922
	Establishments with 1–99 Employees	98,173	(35,305)	19,973	74,792	132,022	201,647	28,005	6,875	9,653	535,835
	Establishments with 100+ Employees	38,363	(13,796)	7,805	29,226	51,590	78,797	10,944	2,687	3,772	209,386
	All Establishments	136,536	(49,101)	27,777	104,018	183,612	280,444	38,949	9,562	13,425	745,221
162	Heavy Construction, except Highway and Street Construction:										
	Establishments with 1–9 Employees	163,753	(58,889)	33,314	124,754	220,213	336,348	46,713	11,468	16,101	893,775
	Establishments with 1–99 Employees	615,174	(221,231	125,153	468,665	827,280	1,263,565	175,488	53,082	60,486	3,357,663
	Establishments with 100+ Employees	411,371	(147,939)	83,691	313,400	553,208	844,955	117,350	28,809	40,448	2,245,293
	All Establishments	1,026,546	(369,169)	208,844	782,065	1,380,488	2,108,520	282,838	71,891	100,934	5,602,956
171	Plumbing, Heating and Air-Conditioning:										
	Establishments with 1–9 Employees	50,397	(18,124)	10,253	38,394	67,773	103,515	14,376	3,529	4,955	275,069
	Establishments with 1–99 Employees	134,411	(48,337)	27,345	102,400	180,755	276,081	38,343	9,413	13,216	733,627
	Establishments with 100+ Employees	27,409	(9,857)	5,576	20,881	36,859	56,297	7,819	1,919	2,695	149,598
	All Establishments	161,820	(58,194)	32,921	123,281	217,614	332,378	46,162	11,333	15,911	883,225
174	Masonry, Stonework, Tile Setting, and Plastering:										
	Establishments with 1–9 Employees	43,691	(15,712)	8,889	33,286	58,756	89,742	12,464	3,060	4,296	238,470
	Establishments with 1–99 Employees	124,913	(44,922)	25,413	95,164	167,982	256,571	35,633	8,748	12,282	681,784
	Establishments with 100+ Employees	21,736	(7,817)	4,422	16,560	29,231	44,646	6,201	1,522	2,137	118,638
	All Establishments	146,649	(52,738)	29,835	111,724	197,213	301,217	41,834	10,270	14,419	800,422
175	Carpentry and Floor Work:										
	Establishments with 1–9 Employees	133,064	(47,853)	27,071	101,374	178,943	273,313	37,959	9,319	13,083	726,272
	Establishments with 1–99 Employees	245,389	(88,247)	49,923	186,947	329,997	504,028	70,001	17,185	24,128	1,339,349
	Establishments with 100+ Employees	32,739	(11,774)	6,661	24,942	44,027	67,246	9,339	2,293	3,219	178,693
	All Establishments	278,128	(100,021)	56,583	211,889	374,024	571,274	79,340	19,478	27,347	1,518,042
176	Roofing, Siding and Sheet Metal Work:										
	Establishments with 1–9 Employees	355,646	(127,899)	72,354	270,946	478,269	730,496	101,453	24,907	34,968	1,941,141
	Establishments with 1–99 Employees	899,629	(323,527)	183,024	685,375	1,209,812	1,847,834	256,633	63,003	88,455	4,910,237
	Establishments with 100+ Employees	86,461	(31,094)	17,590	65,870	116,273	177,591	24,664	6,055	8,501	471,913
	All Establishments	986,091	(354,621)	200,614	751,244	1,326,085	2,025,426	281,297	69,058	96,956	5,382,150
1791	Structural Steel Erection:										
	Establishments with 1–9 Employees	1,193,984	(429,384)	242,908	909,626	1,605,657	2,452,437	340,602	83,617	117,397	6,516,844
	Establishments with 1–99 Employees	5,312,751	(1,910,587)	1,080,844	4,047,472	7,144,533	10,912,364	1,515,543	372,064	522,369	28,997,353
	Establishments with 100+ Employees	1,372,439	(493,560)	279,214	1,045,580	1,845,642	2,818,983	391,509	96,115	134,943	7,490,864
	All Establishments	6,685,190	(2,404,147)	1,360,057	5,093,052	8,990,175	13,731,347	1,907,052	468,179	657,312	36,488,217
	All Significantly Affected Industry Groups:										
	Establishments with 1–9 Employees	3,160,225	(1,136,489)	493,517	2,407,589	4,249,838	6,491,087	901,502	221,318	310,725	17,099,312
	Establishments with 1–99 Employees	10,489,755	(3,772,356)	1,629,606	7,991,526	14,106,514	21,545,904	2,992,362	734,621	1,031,391	56,749,324
	Establishments with 100+ Employees	3,800,976	(1,366,918)	524,676	2,895,740	5,111,514	7,807,187	1,084,286	266,191	373,726	20,497,378
	All Establishments	14,290,731	(5,139,274)	2,154,281	10,887,266	19,218,028	29,353,091	4,076,648	1,000,812	1,405,117	77,246,701
	Other Affected Industry Groups [b]	80,910	(29,097)	769,533	61,641	108,807	166,189	23,081	5,666	7,955	1,194,685
	Total	14,371,641	(5,168,371)	2,923,815	10,948,907	19,326,835	29,519,280	4,099,729	1,006,478	1,413,072	78,441,386

Note: Figures in the table may not sum to totals due to rounding.

[a] Total compliance costs were distributed among industry groups according to the percentage of iron workers employed in that group (see Table 1). Within SIC groups, costs were distributed by share of revenue for firms in the size class.

[b] Other industries potentially affected by the final steel erection standard employ a small percentage of iron workers. These industry groups are: SIC 153, General Building Contractors—Operative Builders; and SIC 177, Concrete Work. Because firms in these industries are seldom involved directly in structural steel erection, OSHA has grouped them separately.

Source: U.S. Department of Labor, OSHA, Office of Regulatory Analysis.

OSHA projects that full compliance with the final standard will, after deducting costs incurred to achieve compliance with the existing standard, result in net (or incremental) annualized costs of $78.4 million for affected establishments. Among incremental annualized costs, expenditures for slip-resistant coatings of skeletal structural steel are expected to total $29.5 million, or 38 percent of total costs; expenditures for the safe design and erection of steel joists required by the final standard account for $19.3 million, or 25 percent of total costs; fall arrest systems account for $14.4 million, or 18 percent of total costs; and expenditures for anchor bolts necessary for structural stability account for $11.0 million, or 14 percent of total costs. Other control costs associated with compliance with the final steel erection standard are those for guardrails ($2.9 million); recordkeeping associated with administrative controls (1.4 million); and training ($1.0 million). In addition, OSHA anticipates that the expanded use of fall arrest systems in bridge erection will eventually lead to a dramatic reduction in the use of personnel safety nets on those projects, resulting in estimated cost savings of $5.2 million.

Potential Economic Impacts

OSHA analyzed the potential impacts of these compliance costs on prices, profits, construction output and other economic indices in the steel erection industry. In particular, OSHA examined potential economic impacts on establishments in SIC 1791, Structural Steel Erection, where the majority of the 57,000 structural metal workers are employed. This analysis shows that the final standard is economically feasible for these firms.

OSHA examined the potential economic impacts of the final standard by making two assumptions used by

economists to bound the range of possible impacts: the worst-case assumption of no-cost pass-through, *i.e.,* that employers will be unable to pass any of the costs of compliance forward to their customers, and the worst-case assumption of full-cost pass-through, *i.e.,* that employers will be able to pass all of the costs of compliance forward to their customers. As summarized in Table 5, below, OSHA estimates that, if affected firms in SIC 1791 were forced to absorb these compliance costs entirely from profits (a highly unlikely scenario), profits would be reduced by an average of 6.5 percent. If, at the other extreme, affected firms were able to pass all of these compliance costs forward to general contractors and project owners, OSHA projects that the price (revenue) increase required to pay for these costs would be less than 1 percent (0.40 percent). A price increase of 0.40 percent would have little, if any, effect on the choice between steel erection and other forms of building.

In addition to examining the economic effects of the final standard on firms in SIC 1791, OSHA estimated the impacts of the final standard on two other construction industry divisions involving steel erection: (1) The entire construction sector; and (2) construction activity where structural steel constitutes the physical core of the project, termed ''steel-frame construction'' by OSHA.

For the dollar value of business for the entire construction sector, OSHA totaled 1996 sales data for SICs 15, 16, and 17 provided in a Dun & Bradstreet national business database [D&B, 1996a]. OSHA derived pre-tax income (Column 2 in Table 5) for the construction sector by, first, calculating industry profit using Dun & Bradstreet data on post-tax return on sales (post-tax profits) and, second, applying a formula that converts post-tax income to pre-tax income based on tax rates in the U.S. corporate tax code. OSHA found that, for the construction sector as a whole, price impacts under full cost pass-through would be 0.01 percent, and profit impacts assuming no cost pass-through would be 0.2 percent. Thus in the context of the construction sector as a whole, the final standard would have little impact.

TABLE 5.—POTENTIAL ECONOMIC IMPACTS OF THE FINAL STEEL ERECTION STANDARD ON SELECTED SECTORS WITHIN THE CONSTRUCTION INDUSTRY

[Under Worst-Case Conditions, 1996 Revenue and Profit Data]

	Dollar value of business (a) ($millions)	Pre-tax income (b)($millions)	Compliance costs as a percent of revenue (c)	Compliance costs as a percent of profit (c)
SIC 1791, Structural Steel Erection	9,285.7	562.4	0.39	6.49
Construction Sector as a Whole	768,155.9	43,839	0.01	0.18
Steel-Frame Construction (d)	119,979.2	6,847.2	0.07	1.15

(a) Based on data from Dun & Bradstreet, National Profile of Businesses, 1996.

(b) Based on data from Dun & Bradstreet, National Profile of Businesses, 1996; Dun & Bradstreet, Industry Norms and Key Business Ratios, 1996; and OSHA profit calculations.

(c) Revenue and profit impacts were calculated by dividing annual compliance costs for each of the four construction sectors shown in the table by, respectively, the dollar value of business and pre-tax income. Compliance costs assigned to these sectors are based on total costs of $78.4 million and were applied as follows: construction sector as a whole—$78.4 million; steel-frame construction—$78.4 million; and SIC 1791, Structural Steel Erection—$36.5 million.

(d) Steel-Frame Construction is defined by OSHA as the body of construction projects where steel framing constitutes the physical core of the structure. The dollar value of business and pre-tax income for Steel-Frame Construction were computed by applying the percentage of the value of the steel market share (15.6 percent), excluding that for tanks and towers, of all construction starts to the dollar value of business and pre-tax income for the entire construction sector. Data on the steel market share for 1995 are based on memoranda to OSHA from Construction Resources Analysis, College of Business Administration, University of Tennessee, Knoxville [Exs. 9–143 and 9–144].

Source: U.S. Department of Labor, OSHA, Office of Regulatory Analysis.

OSHA calculated the value of steel-frame construction using data provided by the Construction Resources Analysis office of the University of Tennessee, College of Business Administration on the value of the steel market share of the entire construction industry. In this calculation, OSHA applied the percentage of the value of the steel market share (15.6 percent), excluding that for tanks and towers, of all construction starts to the dollar value of business and pre-tax income for the entire construction sector, thereby eliminating all non-steel construction (as defined in the final standard) from the earnings total. Price increases for steel frame construction as a whole are of particular interest because they represent the price increases to the ultimate customers of steel erection services, the purchasers of buildings, bridges, etc. Under the worst-case price increase scenarios, the price of such projects would increase by 0.1 percent. It is exceedingly unlikely that a customer would fail to go ahead with a project as a result of a price increase of this magnitude.

OSHA believes that, prior to the generation of the cost savings projected to accrue from implementation of the standard, most steel erectors will handle the increase in direct costs by increasing their prices somewhat and absorbing the remainder from profits. Within steel erection markets, the particular blend of impacts experienced by a given firm will depend on the degree of competition with concrete erection and other alternative types of construction in the firm's local market area. Although these minimal economic impacts would be felt by most affected employers after implementation of the standard, OSHA anticipates—based on testimony by members of SENRAC and other industry representatives whose current fall protection programs and other safety measures mirror those required by the final standard [Exs. 6–3, 6–8, and 6–10]—that offsetting cost savings will at least partially reverse any negative economic impacts.

Regulatory Flexibility Screening Analysis

The Regulatory Flexibility Act of 1980 (RFA), as amended in 1996 (5 U.S.C. 601 *et seq.*), requires regulatory agencies to determine whether regulatory actions will have a significant impact on a substantial number of small entities. Pursuant to the RFA, OSHA has assessed the potential small-business impact of the final steel erection standard under two worst-case scenarios. On the basis of a regulatory flexibility screening assessment and the

underlying data, summarized below, OSHA has determined that the final standard will have a significant impact on a substantial number of small entities. Thus, OSHA has conducted a full Final Regulatory Flexibility Analysis, as required. OSHA's Final Regulatory Flexibility Analysis follows the screening analysis presented in this section.

The Small Business Administration defines small entities, or ''concerns,'' in terms of the number of employees or the annual receipts of establishments in affected sectors. For employers in SIC 17, small concerns are defined by SBA as those with $7.0 million or less in annual receipts. OSHA has estimated that in SIC 1791, Structural Steel Erection, based on 1998 data from Dun & Bradstreet (D&B) and using D&B's estimate of the dollar value of business to represent annual receipts, the class of establishments with 99 or fewer employees comes closest to the class of firms qualifying as small concerns under the SBA definition. Not all firms in this class would have annual receipts of less than $7.0 million; however, OSHA has conservatively chosen to overestimate the number of small firms rather than try to extrapolate the number of small firms from the limited data available. Establishments with 99 or fewer employees represent 98.4 percent of the 4,675 establishments and employ 75.4 percent of the 55,965 workers in SIC 1791, according to Dun & Bradstreet's national market profile [D&B, 1998].

In this regulatory flexibility screening analysis, OSHA assessed the impacts of compliance costs within the industry group with the largest concentration of affected employers and employees, SIC 1791, Structural Steel Erection. According to data from the Bureau of Labor Statistics, of the approximately 57,000 iron workers in construction, roughly 26,000 are employed in SIC 179, Miscellaneous Special Trade Contractors. OSHA believes that the great majority of these workers are found in SIC 1791, Structural Steel Erection, because the other industries in SIC 179 (glass and glazing, excavation work, wrecking and demolition, installation and erection of building equipment (such as installing elevators, revolving doors and industrial machinery and specialty trade contractors not elsewhere classified) are unlikely to employ significant numbers of iron workers. This contention is supported by the fact that available data on iron worker deaths (see Table III–2 in the final economic analysis) show that SIC 1791 accounted for roughly 90 percent of iron worker deaths in SIC 179 in 1994–98. Total employment for all trades in SIC 1791 is 55,965 workers, according to Dun & Bradstreet [D&B, 1998]. BLS and D&B data indicate that iron workers constitute roughly 47 percent of the labor force in SIC 1791, the largest concentration of iron workers in any four-digit group where iron workers are employed. In addition, only firms in SIC 1791 earn the majority of their revenues from steel erection. (According to the definitions used in the SIC system, this means that firms that do steel erection but are classified in other sectors earn only a minority of their total revenues from their steel erection business.)

Compared with all other industry groups in the construction industry, firms in SIC 1791 have the greatest number of iron workers per firm and the highest percentage of iron workers relative to total employment. Since the costs of compliance are approximately proportional to the number of iron workers in a given firm, establishments in SIC 1791 will experience the greatest economic impact.

In this analysis of impacts, OSHA estimated the costs of compliance for SIC 1791 by applying the percentage of iron workers in that industry group, presented in Table 1, to the total costs estimated for all affected industry groups in construction. According to the 1998 BLS employment survey [BLS, 1998], SIC 179, Miscellaneous Special Trade Contractors, employs approximately 47 percent of the 56,840 iron workers in the entire construction sector. Assuming that most, if not all of the iron workers in SIC 179 are employed in SIC 1791, OSHA estimates that 47 percent of the iron workers in construction are employed in SIC 1791. OSHA estimates that, in general, compliance costs under the final standard are proportional to employment. Thus, compliance costs in SIC 1791 can be approximated by applying to total costs the percentage of iron workers (47 percent) in SIC 1791. Therefore, OSHA estimates that if net annual costs for all of construction will be $78.4 million, then net annual costs in SIC 1791 will be 47 percent (46.5 percent before rounding) of total costs, or $36.5 million.

To assess the possible economic impacts of the final standard on small firms in SIC 1791, OSHA distributed compliance costs within size classes according to an estimate of the percent of revenue (gross sales) earned by establishments within those size classes. Applying Dun & Bradstreet revenue figures, OSHA has determined that costs represent less than one percent (0.40 percent after rounding) of revenues for firms with 99 or fewer employees, so that under the extreme case of full-cost pass-through to consumers, prices would rise by no more than one percent (see Table 6, below). Similarly, for the very smallest firms, those with fewer than ten employees, price impacts are projected to be low: 0.40 percent after rounding.

TABLE 6.—POTENTIAL ECONOMIC IMPACTS OF THE FINAL STEEL ERECTION STANDARD ON SMALL FIRMS IN THE STEEL ERECTION INDUSTRY UNDER WORST-CASE CONDITIONS

[1996 Revenue and Profit Data]

	Annual compliance costs (a) ($millions)	Compliance cost per establishment [a]	Dollar value of business [b] ($millions)	Revenue per establishment [b]	Pre-tax income [c] ($millions)	Pre-tax income per establishment [c]	Compliance costs as a percent of revenue	compliance costs as a percent of profit
SIC 1791,Structural Steel Erection	36.5	8,175.7	9,285.7	2,080,606.0	562.4	126,024.2	0.39	6.49
SIC 1791, 1–99 Employees	25.0	5,758.8	6,369.2	1,465,541.8	395.8	91,074.8	0.39	6.32
SIC 1791, 1–9 Employees	8.9	2,866.7	2,260.8	729,530.4	95.8	30,898.0	0.39	9.28

[a] Based on Table 4 and data on number of establishments from Dun & Bradstreet, National Profile of Businesses, 1996. Compliance costs for size groups were derived by applying the percentage of revenue in the size groups to total costs for all of SIC 1791.

[b] Based on data from Dun & Bradstreet, National Profile Businesses, 1996.

[c] Based on data from Dun & Bradstreet, National Profile of Businesses, 1996; Dun & Bradstreet, Industry Norms and Key Business Ratios, 1995–96; and OSHA profit calculations.

Source: U.S. Department of Labor, OSHA, Office of Regulatory Analysis.

Under the alternate scenario of full-cost profit absorption (an extremely unlikely scenario) among steel erection contractors with 99 or fewer employees, profit impacts would be 6.3 percent; for firms with one to nine employees, profit impacts would be 9.3 percent. Thus, costs as a percentage of profits and revenues for SIC 1791 are lower when a small entity is defined to include all firms within the SBA size standards (less than $7 million in revenue) than for small entities employing fewer than 10 workers. The difference in these projected profit impacts for the two smaller size categories of firms reflects a difference in the 1995–96 profit rates for the two groups [D&B, 1996b] applied by OSHA in this impacts analysis: (1) an average 3.6 percent rate of net-profit-after-tax-to-net-sales for establishments with fewer than ten employees (roughly defined as those with assets of less than $250,000) and (2) an average 4.9 percent post-tax profit/sales ratio for establishments with one to ninety-nine employees (roughly defined as those with assets of $250,000 to $1 million) (see Chapter VI in the final economic analysis for further explanation).

OSHA believes that most small erectors will, along with the rest of the industry, receive economic benefits from compliance with the final rule that will serve to significantly offset any direct cost impacts. As noted above, employer representatives on the committee and at the public hearing commented on numerous occasions that the safety program implicit within the final standard is compatible with maintaining a profitable business operation, and that such a program would, in fact, improve profitability and competitiveness [Exs. 6–3; 6–8; 6–10; 202X, pp. 99, 119; 206X, pp. 274–275]. Therefore, OSHA anticipates that most small entities will experience minimal economic impacts as a result of implementation of the final standard. However, since compliance costs under the worst-case scenario exceed 5 percent of profits in some of the industries affected, OSHA's internal guidelines with respect to the Regulatory Flexibility Act require the Agency to conduct a full Final Regulatory Flexibility Analysis.

Regulatory Flexibility Analysis

The Regulatory Flexibility Act, as amended in 1996, requires that a Final Regulatory Flexibility Analysis contain the following elements:

(1) A succinct statement of the need for and objectives of the rule;

(2) A summary of the significant issues raised by public comments in response to the initial regulatory flexibility analysis, a summary of the Agency's assessment of such issues, and a statement of any changes made to the rule as a result of such comments;

(3) A description and an estimate of the number of small businesses to which the rule will apply or an explanation of why no such estimate is available; and

(4) A description of the projected reporting, recordkeeping and other compliance requirements of the rule, including an estimate of the classes of small entities that will be subject to the requirements and the type of professional skills necessary for preparation of the report or record.

In addition, a Regulatory Flexibility Analysis must contain a description of the steps the Agency has taken to minimize any significant economic impacts on small entities consistent with the stated objectives of applicable statues, including a statement of the factual, policy and legal reasons for selecting the alternative adopted in the final rule, and the reasons for rejecting each of the other significant alternatives [SBA, 2000].

Reasons for the Final Rule

According to OSHA's analysis of accident data for an eleven-year period (1984–1994), 319 fatalities involved hazardous conditions that are addressed by OSHA's current and revised steel erection standard (for details, see Chapter III, Risk Assessment and Benefits, and Appendix B of the preliminary economic analysis). Based on a review of BLS injury census data for the period 1994–98, OSHA estimates that an average of 35 fatalities and 2,279 lost-workday injuries annually involve circumstances that would be addressed by provisions in the final OSHA steel erection standard. For an industry with an estimated work-force of only 56,840 workers, these fatality and injury levels clearly demonstrate that the risk confronting these workers is significant. Therefore, OSHA has developed final regulatory text that is designed to address this risk.

Objectives of the Final Rule

The objective of this final standard is to reduce the risk of occupational exposure to a variety of hazards on steel erection construction worksites, such as those involving falls, slips, trips, being struck by or crushed by objects or loads, and structural collapses. These occupational hazards will be reduced by this final rule through the use of engineering controls, work practice controls, inspections of worksite conditions, training, communication, and recordkeeping. Implementation of these measures has been shown to minimize or eliminate occupational exposure to these hazards during the erection of steel structures and thus to reduce the risk of injury or death among workers.

Significant Issues Raised in the Initial Regulatory Flexibility Analysis

Among the issues raised in the notice of proposed rulemaking and in the initial regulatory flexibility analysis, the most significant concerned the impact of the proposed standard on small fabricators of structural steel members, including shops that fabricate open web steel joists and that complete the final detailing and coating of other structural steel members. These firms would be affected by provisions in the final rule that require joists, columns, and girders to arrive at the site meeting certain design specifications. For example, joists erected in bays of 40 feet or greater must be designed for bolting in the final connection of joists to the permanent structure. Therefore, all joist fabricators who produce joists that meet this criterion must drill or punch holes in appropriate locations on the joists to allow for bolting at the site.

In the pre-proposal period and during the hearing, the Steel Joist Institute argued that some small firms may lack the equipment to prepare joists as required by the standard, and that as a result such firms could be severely impacted (*see,* for example, Ex. 204X, pp. 60–63). However, buildings requiring joists of over 40 feet in length represent only a portion of the total market. In the Preliminary Economic Analysis, OSHA suggested that, to the extent that there are small firms lacking suitable equipment, such firms could still produce fabricated steel for a variety of steel erection projects and for portions of other projects. As a result, in that analysis, OSHA did not anticipate a significant impact, if any, on those firms that lack the proper equipment to prepare joists of greater than 40 feet for bolting.

In the Initial Regulatory Flexibility Analysis, OSHA solicited comment on two issues: (1) Whether there are small firms lacking suitable equipment to prepare joists in the manner prescribed by the rule; and (2) the percentage of the steel framing market that requires the use of joists of greater than 40 feet in length. In response, the Steel Joist Institute (SJI) presented cost data to demonstrate that the proposed requirement for bolt holes would severely impact the joist manufacturing industry. SJI stated that production costs for the industry as a whole could rise by as much as 11 percent after the

rule is promulgated and joist fabricators are required to drill and punch holes in the joists (Ex. 204X, p. 62). The American Institute of Steel Construction echoed these concerns about the economic impacts of the proposed joist requirements (Ex. 13–209).

As a result of these concerns, OSHA examined the impact of the final standard on the fabricated structural metal industry (SIC 3441), which produces iron and steel for structural purposes such as the construction of bridges and buildings, even though these employers are not affected employers under the OSH Act. This sector would need to bore holes in joists greater than 40 feet in length so they can be bolted rather than welded (§ 1926.757). In addition, this sector would need to supply seats or equivalent connection devices for double connections (§ 1926.756); supply holes or other devices attached to perimeter columns to permit installation of perimeter safety cables (§ 1926.756); provide a vertical stabilizer plate on each column for steel joists (§ 1926.757); and ensure, through approved test methods, that paint coatings on top surfaces of structural steel members achieve a minimum average slip resistance (§ 1926.754).

OSHA's impact analysis assumes that this sector would bear all of the costs associated with these provisions of the final standard concerning open web joists, slip resistance of skeletal structural steel, column connections for perimeter safety cables and double connections. In fact, however, because of contractual arrangements among fabricators, steel erectors and building owners, most of the costs borne by the fabricators affected by this provision would be transmitted through steel erectors to building owners and would appear in the bid price of the project or would be incurred as onsite costs.

For purposes of this analysis, OSHA has defined small firms in the fabricated structural metal industry using the SBA definition of small firms: firms with fewer than 500 employees. Department of Commerce data show that there were 2,891 small firms in this sector in 1997. (Small firms represented 99.7 percent of all firms). Department of Commerce data also show that these small firms had total revenues of over $13.3 billion, over 80 percent of all industry revenues. Dun and Bradstreet data show that in fiscal year 1995, the median profits for firms in this sector were a healthy 3.5 percent of sales. Small firms were assumed to bear costs in proportion to their revenues. OSHA has not estimated costs to small fabricators for the design, engineering, testing, and manufacture of the special devices and coatings that will be supplied to steel erectors to enable them to achieve compliance with the final standard. However, OSHA anticipates that even if all of the costs of these provisions of the standard are borne by the fabricated structural metal industry, these costs will represent only a small percentage (0.37 percent) of revenues and 10.5 percent of profits for small firms in this sector (if all compliance costs were absorbed from profits, a highly unlikely scenario). Thus, OSHA finds that the costs of the standard will not cause a significant impact on small firms in this sector.

On the other hand, other speakers at the hearing who have field experience on this issue testified that the bolted joist provision could lead to cost savings by reducing the exposure time of workers who would otherwise be welding the connection (Ex. 208X, pp. 211, 252). After weighing this offsetting evidence, the Agency has concluded that in the fabricated structural metal industry, any additional production costs—and associated increases in prices for materials used by steel erectors—are likely to be offset, at least to some extent, by cost savings and benefits (fatalities and injuries avoided) in the industry—structural steel erection—directly affected by the rule. Therefore, OSHA believes that the provision is justified. In this preamble to the final rule, OSHA makes similar arguments for the other provisions in the standard, discussed above, that impact parties that are indirectly affected by the standard. In sum, OSHA finds that these provisions of the final rule are essential for the comprehensive safety program envisioned by this final steel erection standard.

In another example of a provision in the final rule where smaller entities connected to the steel erection industry would be affected by design criteria, § 1926.754 of the final standard specifies that coatings of structural steel members must achieve a minimum average slip resistance—with documentation or certification that the standard has been reached, based on an appropriate test method—before workers are permitted to walk the top surface of the steel member. Thus, all fabricators who coat steel members before shipping to the site would need to certify that the steel members meet the slip resistance standard. It is also possible that there may be impacts on small paints and coatings manufacturers. OSHA anticipates that the most likely scenario is that costs of friction resistant coatings will be passed forward to fabricators, and, in turn, to steel erection firms.

OSHA has examined the technological and economic implications of these and other issues raised in the rulemaking that affect smaller entities and has addressed any concerns about inequitable regulatory impacts on those entities in this preamble to the final standard and in the final economic analysis. In sum, based on comment in the record, OSHA finds that, although some smaller firms may experience impacts as a result of the design specifications in the final rule, these cost impacts can generally be passed forward to intermediate and final customers in the market—that is, the steel erectors, general contractors, owners and tenants of the building project—in such a way as to minimize impacts on the market share of smaller fabrication shops. Furthermore, OSHA believes that technological developments and market innovations will help to smooth the transition to the new market environment created by the final rule. For additional discussion of these technological and economic issues and their small-firm implications, see IV. Summary and Explanation of the Final Rule in this preamble and Chapter IV, Technological Feasibility, in the final economic analysis.

Description of the Number of Small Entities

For this rulemaking, OSHA has identified the population at risk of injury in the construction workforce and the industry groups where steel erection is conducted, but cannot with certainty estimate the number of small entities to which the final rule will apply because some firms even in SIC 1791 often perform work unrelated to steel erection and some firms in other SICs occasionally do steel erection work. There were no comments in the record that directly addressed this question. In SIC 1791, Structural Steel Erection, where the majority of iron workers are employed, there are roughly 4,544 establishments defined as small by the SBA, *i.e.,* these entities earn less than $7 million in annual revenue. If all establishments in SIC 1791 were affected by the final standard, then small entities would comprise 97 percent of all affected entities, using the SBA size standard. There are 3,898 very small establishments, i.e., those employing fewer than 20 employees in SIC 1791; these very small establishments comprise 83 percent of all establishments in the industry.

Description of the Reporting, Recordkeeping and Other Compliance Requirements of the Final Rule

The final rule would require, in the following provisions, that employers establish and maintain records for the use of engineering controls, work practices, inspections, and training:

- Site layout, site-specific erection plan, and construction sequence;
- Hoisting and rigging;
- Structural steel assembly;
- Open-web steel joists; and
- training.

Most steel erection employers would be affected by the reporting and recordkeeping requirements in these sections. In estimating the cost of establishing and maintaining the records for each of these control areas, OSHA used the wage rate of the applicable professional personnel. To give two examples: (1) For the cost of certifying that lift rigging meets manufacturer's specifications, OSHA applied the wage rate for an ironworker supervisor; and (2) for the costs of documenting alternative methods for joist erection, OSHA applied the wage rates of a project manager and a structural engineer. All recordkeeping requirements included in the final rule could be performed by existing staff in any of the covered industries. A detailed description of the recordkeeping requirements appears in Chapter II, Industry Profile, and in Chapter V, Costs of Compliance, of this final economic analysis.

Relevant Federal Rules

In this final rule, OSHA is revising the current safety standard for steel erection that has been in place with little change for nearly 30 years. OSHA believes that this thorough and comprehensive revision to existing subpart R will provide greater protection and eliminate ambiguity and confusion, thereby improving safety in this important segment of the construction industry. There are no other federal workplace rules or guidelines that overlap with the OSHA steel erection standard.

Significant Alternatives Considered

Through its deliberations, the Negotiated Rulemaking Committee considered alternatives to many of the provisions of the final standard. Several of these, and the Committee's choices with respect to them, are discussed below. For example, the final standard features, wherever possible, performance language that permits maximum flexibility for achieving safety outcomes. In the area of site-specific plans, the final rule provides an opportunity to those employers who select alternative means and methods for complying with certain sections of the standard, and to incorporate these alternatives into a site-specific erection plan. OSHA considered small contractors when it elected not to propose a universal requirement for a site-specific erection plan for all steel erection sites. Instead, the final standard provides guidelines for establishing a site-specific erection plan in a non-mandatory appendix to assist employers who choose to develop such a plan, as recommended by SENRAC.

Other areas of the final standard that involve the consideration of alternatives and are responsive to small contractors include rules for the safe use of cranes and other lifting equipment and the proper assembly of metal buildings other than those constructed of heavy structural steel. In light of the number of small steel erectors potentially affected by the hoisting and rigging section of the final standard, OSHA has attempted to minimize the burden of the pre-shift visual crane inspections by having the inspection checklist apply only to the most essential safety elements, as recommended by SENRAC. Additionally, since there are a large number of small builders who erect pre-engineered metal structures exclusively, OSHA determined that a separate section in the final standard dedicated to this type of steel erection would ease compliance for small erectors.

The Regulatory Flexibility Act emphasizes the importance of performance-based standards for small businesses. For example, in § 1926.760, Fall Protection, employers are required to protect certain employees exposed to fall distances of 15 feet or greater. Paragraph (a)(1) of § 1926.760 lists the types of general safety systems—*i.e.,* guardrail systems, safety net systems, personal fall arrest systems, positioning device systems or fall restraint systems—that must be used by employers to provide fall protection to their employees. However, the standard does not mandate particular engineering solutions by structure type, site location, crew size, or other criteria. Employers are free to select any one system or combination of systems that is most compatible with company practice and employee protection so long as the performance measure—fall protection at 15 feet—is achieved.

As another example of OSHA's concern for the potential impacts on small businesses, the final standard minimizes recordkeeping burden where training, notifications, and other forms of communication are required, as recommended by SENRAC. Regarding training provisions, general instruction in fall hazards is mandated for all employees exposed to that risk, but the scope of additional special training is limited to three particularly hazardous activities: multiple lift rigging, connecting, and decking. Employers are to ensure that the training is provided but do not have to document or certify the program. Other requirements where communication will be necessary, including those involving field curing of concrete footings and modification of anchor bolts, were written in such a way as to limit the notifications to cover only the most essential information. Supplementary explanatory materials, presented in appendices to the standard, are intended to assist employers in complying with the rule and otherwise providing a safer workplace.

Another approach recommended by the Regulatory Flexibility Act is compliance date phase-ins for small businesses. Throughout their deliberations, the negotiated rulemaking advisory committee recognized the importance of effective outreach to the steel erection community prior to and following promulgation of the standard. In fact, as stated by a committee member prior to the issuance of the proposed standard, many employers in the industry are aware of, and have already begun to align their safety programs with, the standard (Ex. 9–156). With the exception of the requirement addressing slip resistance of skeletal structural steel (the date for mandatory compliance with this provision is five years after the effective date of the standard), the standard as a whole becomes effective within 180 days. OSHA believes that any compliance extensions for affected employers, including small employers, would only marginally ease the economic burden, given the progress in occupational safety already underway throughout industry and the non-capital-intensive nature of the rule, and would delay unnecessarily the protection of workers who would otherwise benefit from compliance with the rule.

In sum, throughout the process of negotiated rulemaking and during the period leading to this notice of final rulemaking for OSHA's steel erection standard, alternatives that would benefit small employers were considered and addressed on a routine basis. After considering a number of alternatives and adopting those that were consistent with the mandate imposed by the OSH Act, OSHA has developed a final rule that would minimize the burden on small employers, while maintaining the level of worker protection mandated by the OSH Act.

Non-Regulatory Alternatives

The primary objective of this final standard on structural steel erection is to minimize the number of construction worker injuries and fatalities. To develop this standard, OSHA employed negotiated rulemaking using an advisory committee composed of representatives from the construction industry (both labor and management and both small and larger firms), the insurance industry, the engineering field, and Federal and State government regulatory and research agencies. OSHA itself was also a member of the committee.

OSHA also examined throughout this rulemaking a number of non-regulatory approaches to enhancing workplace safety, including the operation of the classical free market, the tort liability insurance system and the workers' compensation insurance system. OSHA has concluded that these social and economic alternatives to a Federal workplace standard fail to adequately protect workers from the hazards associated with structural steel erection in the construction industry. The private market offers economic signals that could have the potential to direct workers toward desirable combinations of risk and reward. However, market imperfections and social and economic institutions—such as limitations to mobility, accumulated benefits, and social welfare programs—prevent workplaces from achieving the most optimal safety outcomes, creating inefficient, inadequately compensated risks for workers. Tort liability laws and workers' compensation provide some protection, but fall far short of fully compensating injured employees for the loss of wages, the medical costs, and the legal and other costs resulting from workplace accidents. Furthermore, these approaches are inherently reactive, rather than proactive, and largely fail to introduce progressive safety programs at all levels of industry. Therefore, OSHA finds that this final revision to the steel erection standard provides the necessary remedy.

Sources

CONSAD Research Corporation. [CONSAD, 1996] ''Formula for Calculating Pre-Tax Profits from Post-Tax Profits.'' Electronic mail transmittal to OSHA, Office of Regulatory Analysis. November 7, 1996.

Dun & Bradstreet. [D&B, 1998] National Profile of Businesses statistical software. Dun & Bradstreet Information Services, Falls Church, Va. 1998.

Dun & Bradstreet. [D&B, 1996a] National Profile of Businesses data software. Dun & Bradstreet Information Services, Falls Church, Va. 1996.

Dun & Bradstreet. [D&B, 1996b] Industry Norms and Key Business Ratios. Dun & Bradstreet Information Services, Murray Hill, N.J. 1996.

Executive Office of the President. [EO 12866] Executive Order on Regulatory Planning and Review. Executive Order 12866. September 30, 1993.

U.S. Department of Labor, Bureau of Labor Statistics. [BLS, 1998] Occupational Employment Statistics Survey. Office of Employment Projections. 1998.

U.S. Department of Labor. Occupational Safety and Health Administration. [OSHA, 1998] Preliminary Economic and Initial Regulatory Flexibility Analysis of OSHA's Proposed Revision to the Steel Erection Standard (29 CFR Part 1926.750–.761). OSHA, Directorate of Policy, Office of Regulatory Analysis. Washington, D.C., August 1998. Docket S–775, Ex. 11.

U.S. Small Business Administration. [SBA, 2000] Small Business Regulatory Enforcement Fairness Act of 1996. Internet site: *http://www.sba.gov/regfair/news/index.html* September 2000.

VI. Environmental Assessment

The final rule has been reviewed in accordance with the requirements of the National Environmental Policy Act (NEPA) of 1969 (42 U.S.C. 4321 *et seq.*), the regulations of the Council on Environmental Quality (CEQ) (40 CFR part 1500), and DOL NEPA Procedures (29 CFR part 11). The provisions of the standard focus on the reduction and avoidance of accidents occurring during structural steel erection. Consequently, no major negative impact is foreseen on air, water or soil quality, plant or animal life, the use of land or other aspects of the environment.

VII. Federalism

Executive Order 13132, ''Federalism,'' (64 FR 43255; Aug. 10, 1999), sets forth fundamental Federalism principles, Federalism policymaking criteria, and provisions for consultation by Federal agencies with State or local governments when policies are being formulated which potentially affect them. The Order generally requires that agencies, to the extent possible, refrain from limiting State policy options; consult with States prior to taking actions that would restrict State policy options; and take such action only when there is clear constitutional authority and the presence of a problem of national scope. Executive Order 13132 also provides that agencies shall not promulgate regulations which have significant Federalism implications and impose substantial direct compliance costs on State or local governments, unless the agency consults with State and local officials early in the process of developing the proposed regulation and provides a summary Federalism impact statement in the preamble of the final rule. Finally, the Order provides for preemption of State law only if there is a clear Congressional intent for the agency to do so, and provides that any such preemption is to be limited to be limited to the extent possible.

Executive Order 13132 required agencies to have in place by January 31, 2000 an intergovernmental consultation process for proposed regulations with Federalism implications; the Steel Erection standard was published for public comment prior to that date, on August 13, 1998, and accordingly was not subject to the new consultation procedure.

Among the Federalism policy criteria addressed by Executive Order 13132 is the principle that national action limiting the policymaking discretion of the States shall be taken only when ''national activity is appropriate in light of the presence of a problem of national significance.'' Since many steel erection-related injuries and fatalities are reported every year in every State and since the hazards of steel erection work are present in workplaces in every State of the Union, steel erection hazards are clearly a national problem. The final standard on steel erection is written so that employees in every State will be protected by the standard. To the extent that there are any State or regional peculiarities, States with occupational safety and health plans approved under section 18 of the OSH Act can develop their own comparable State standards to deal with any special problems.

In short, there is a clear national problem related to occupational safety and health for employees exposed to MSD hazards in the workplace. Any steel erection standard developed by States that have elected to participate under section 18 of the OSH Act would not be preempted by this final rule if the State standard is determined by Federal OSHA to be ''at least as effective'' as the Federal standard.

Another policy criterion expressed in the Executive Order is that ''regulatory preemption of State law shall be restricted to the minimum level necessary to achieve the objectives of the statute pursuant to which the

regulations are promulgated.'' The preemptive effects of the final steel erection standard upon the States are determined by the OSH Act itself: as an occupational safety and health standard issued under section 6(b) of the Act, the standard preempts any State or local law which regulates the issue of workplace steel erection protection. *Gade* v. *Nat'l Solid Waste Management Ass'n,* 505 U.S.C. 88 (1992). However, neither the OSH Act nor this standard completely displace State responsibilities which relate to steel erection injuries and fatalities in the workplace; pursuant to section 4(b)(4) of the OSH Act, State laws and programs which address the rights of employers or employees with respect to injuries or illnesses arising out of employment, including State worker compensation programs, are not subject to preemption under the OSH Act. Moreover, under section 18(b) of the Act, any State which wishes to assume responsibility for adopting and enforcing safety or health standards on issues addressed by OSHA standards may do so by submitting and obtaining Federal OSHA approval of a State plan under 18(b) of the Act; among other things, the State plan must include standards which are ''at least as effective as'' those of Federal OSHA. Accordingly, OSHA finds that the final steel erection standard is consistent with the policies set forth in Executive Order 13132 relating to preemption of State laws.

Section 6(b) of the Executive Order provides that agencies shall not issue regulations which impose ''substantial direct compliance costs'' on State or local governments without consulting with State and local officials early in the process of developing the proposed regulation, and without including in the preamble to the final rule a Federalism impact statement. The OSH Act specifically exempts workplaces maintained by States or their political subdivisions from coverage under Federal safety and health standards issued by OSHA, and accordingly nothing in the steel erection standard requires any compliance expenditure by State or local governments. However, 18(c)(6) of the Act requires any State which administers an OSHA-approved State plan to apply the same State occupational safety or health standards applied to private-sector employers to workplaces maintained by State and local government. Slightly under one-half the States and Territories have chosen to implement State plans and enforce ''at least as effective'' State health and safety standards to public sector workplaces. Thus, State and local employers in States which have elected to administer approved State plans will likely incur roughly comparable compliance costs, and will likely attain comparable benefits in the form of reduced injuries and compensation costs, as employers directly subject to the Federal steel erection standard. These costs of complying with State safety regulations are not ''direct'' costs which trigger the application of 6(b) of the Executive Order. Moreover, compliance costs to protect public workers under an approved State plan do not constitute an unfunded Federal mandate under the Unfunded Mandates Relief Act, which does not apply to Federal programs where State participation is voluntary, see 2 U.S.C. 658(5) and 1502.

In summary, the final steel erection standard imposes no substantial direct impact on State or local governments; it indirectly affects State or local employers only in States which have chosen to administer Federally-approved State plans. The final standard contains no special preemption provisions, and preempts State steel erection requirements only to the extent provided by Congress in the OSH Act for any section 6 standard. So therefore the rule does not have Federalism implications as defined in the Executive Order.

The Assistant Secretary certifies that OSHA has complied with applicable requirements of E.O. 13132 in preparing the final steel erection standard. State comments were invited on the proposed rule, and were fully considered in the development of this final rule.

VIII. Unfunded Mandates

For the purposes of the Unfunded Mandates Reform Act of 1995, as well as Executive Order 12875, this rule does not include any Federal mandate that may result in increased expenditures by State, local, and tribal governments, or increased expenditures by the private sector of more than $100 million in any year.

IX. OMB Review Under the Paperwork Reduction Act

Under the Paperwork Reduction Act of 1995, agencies are required to seek OMB approval for all collections of information. As a part of the approval process, agencies are required to solicit comment from affected parties with regard to the collection of information, including the financial and time burdens estimated by the agencies for the collection of information.

This final rule contains collections of information as defined in OMB's regulations at 60 FR 44978 (August 29, 1995) in § 1926.752(a)(1), § 1926.752(a)(2), § 1926.753(c)(5), § 1926.753(e)(2), § 1926.754(c)(3), § 1926.757(a)(4), § 1926.757(a)(7), § 1926.757(a)(9) § 1926.757(e)(4)(i), § 1926.758(g), and § 1926.761. OSHA's rationale for the need to collect information is set forth in the discussion of each of these provisions in Section IV of this preamble.

OSHA solicited comment from the public on all aspects of these collections of information, but the Agency received no comments. In accordance with the Paperwork Reduction Act of 1995 (44 U.S.C. 3501–3520), OSHA requested Office of Management and Budget (OMB) approval of the collections of information described above. OMB has granted approval of the information requirements under OMB Control Number 1218–0237. The approval expires on October 31, 2001.

X. State Plan Standards

The 25 States and territories with their own OSHA approved occupational safety and health plans must adopt a comparable standard within six months of the publication date of this final standard. These 25 states and territories are: Alaska, Arizona, California, Connecticut (for state and local government employees only), Hawaii, Indiana, Iowa, Kentucky, Maryland, Michigan, Minnesota, Nevada, New Mexico, New York (for state and local government employees only), North Carolina, Oregon, Puerto Rico, South Carolina, Tennessee, Utah, Vermont, Virginia, Virgin Islands, Washington, and Wyoming. Until such time as a state standard is promulgated, Federal OSHA will provide interim enforcement assistance, as appropriate, in these states.

XI. List of Subjects

List of Subjects in 29 CFR Part 1926

Structural steel erection, Construction industry, Construction safety, Occupational Safety and Health Administration, Occupational safety and health.

XII. Authority

This document was prepared under the direction of Charles N. Jeffress, Assistant Secretary of Labor for Occupational Safety and Health, U.S. Department of Labor, 200 Constitution Avenue, NW., Washington, DC 20210.

Accordingly, pursuant to sections 4, 6, and 8 of the Occupational Safety and Health Act of 1970 (29 U.S.C. 653, 655, and 657); section 107 of the Contract Work Hours and Safety Standards Act (40 U.S.C. 333), Secretary of Labor's Order No. 6–96 (62 FR 111), and 29 CFR

part 1911, the Agency amends part 1926 of Title 29 of the Code of Federal Regulations as set forth below.

Signed at Washington, D.C., this 8th day of January, 2001.

Charles N. Jeffress,

Assistant Secretary of Labor.

PART 1926—[AMENDED]

Subpart M—Fall Protection

1. The authority citation for subpart M of Part 1926 is revised to read as follows:

Authority: Sec. 107, Contract Work Hours and Safety Standards Act (Construction Safety Act) (40 U.S.C. 333); Sec. 4, 6, 8, Occupational Safety and Health Act of 1970 (29 U.S.C. 653, 655, 657); Secretary of Labor's Orders Nos. 1–90 (55 FR 9033), 6–96 (62 FR 111); and 3–2000 (65 FR 50017), as applicable, and 29 CFR Part 1911.

2. Paragraphs (a)(2) (v) and (vi) of § 1926.500 are redesignated as paragraphs (a)(2) (vi) and (vii), respectively. In addition, paragraphs (a)(2) (iii) and (v) and (a)(3)(iv) are revised to read as follows:

§ 1926.500 Scope, application, and definitions applicable to this subpart.

(a) * * *

(2) * * *

(iii) Fall protection requirements for employees performing steel erection work (except for towers and tanks) are provided in subpart R of this part.

* * * * *

(v) Requirements relating to fall protection for employees engaged in the erection of tanks and communication and broadcast towers are provided in § 1926.105.

* * * * *

(3) * * *

* * * * *

(iv) Section 1926.502 does not apply to the erection of tanks and communication and broadcast towers. (Note: Section 1926.104 sets the criteria for body belts, lanyards and lifelines used for fall protection during tank and communication and broadcast tower erection. Paragraphs (b),(c) and (f) of § 1926.107 provide definitions for the pertinent terms.)

* * * * *

Subpart R—[Amended]

3. The authority citation for subpart R of part 1926 is revised to read as follows:

Authority: Sec. 107, Contract Work Hours and Safety Standards Act (Construction Safety Act) (40 U.S.C. 333); Sec. 4, 6, and 8, Occupational Safety and Health Act of 1970 (29 U.S.C. 653, 655, 657); Secretary of Labor's Order No. 3–2000 (65 FR 50017), and 29 CFR part 1911.

4. Subpart R of part 1926 is revised to read as follows:

Subpart R—Steel Erection

Sec.

1926.750 Scope.
1926.751 Definitions.
1926.752 Site layout, site-specific erection plan and construction sequence.
1926.753 Hoisting and rigging.
1926.754 Structural steel assembly.
1926.755 Column anchorage.
1926.756 Beams and columns.
1926.757 Open web steel joists.
1926.758 Systems-engineered metal buildings.
1926.759 Falling object protection.
1926.760 Fall protection.
1926.761 Training.
Appendix A to Subpart R—Guidelines for establishing the components of a site-specific erection plan: Non-Mandatory Guidelines for Complying with § 1926.752(e)
Appendix B to Subpart R—Acceptable test methods for testing slip-resistance of walking/working surfaces: Non-Mandatory Guidelines for Complying with § 1926.754(c)(3)
Appendix C to Subpart R—Illustrations of bridging terminus points: Non-Mandatory Guidelines for Complying with § 1926.757(a)(10) and § 1926.757(c)(5)
Appendix D to Subpart R—Illustration of the use of control lines to demarcate controlled decking zones (CDZs): Non-Mandatory Guidelines for Complying with § 1926.760(c)(3)
Appendix E to Subpart R—Training: Non-Mandatory Guidelines for Complying with § 1926.761
Appendix F to Subpart R— Perimeter columns: Non-Mandatory Guidelines for Complying with § 1926.756(e) to Protect the Unprotected Side or Edge of a Walking/Working Surface
Appendix G to Subpart R—Fall protection systems criteria and practices from § 1926.502: Non-Mandatory Guidelines for Complying with Complying with § 1926.760(d)
Appendix H to Subpart R—Double connections: Illustration of a clipped end connection and a staggered connection: Non-Mandatory Guidelines for Complying with Complying with § 1926.756(c)(1)

Subpart R—Steel Erection

§ 1926.750 Scope.

(a) This subpart sets forth requirements to protect employees from the hazards associated with steel erection activities involved in the construction, alteration, and/or repair of single and multi-story buildings, bridges, and other structures where steel erection occurs. The requirements of this subpart apply to employers engaged in steel erection unless otherwise specified. This subpart does not cover electrical transmission towers, communication and broadcast towers, or tanks.

Note to paragraph (a): Examples of structures where steel erection may occur include but are not limited to the following: Single and multi-story buildings; systems-engineered metal buildings; lift slab/tilt-up structures; energy exploration structures; energy production, transfer and storage structures and facilities; auditoriums; malls; amphitheaters; stadiums; power plants; mills; chemical process structures; bridges; trestles; overpasses; underpasses; viaducts; aqueducts; aerospace facilities and structures; radar and communication structures; light towers; signage; billboards; scoreboards; conveyor systems; conveyor supports and related framing; stairways; stair towers; fire escapes; draft curtains; fire containment structures; monorails; aerialways; catwalks; curtain walls; window walls; store fronts; elevator fronts; entrances; skylights; metal roofs; industrial structures; hi-bay structures; rail, marine and other transportation structures; sound barriers; water process and water containment structures; air and cable supported structures; space frames; geodesic domes; canopies; racks and rack support structures and frames; platforms; walkways; balconies; atriums; penthouses; car dumpers; stackers/reclaimers; cranes and craneways; bins; hoppers; ovens; furnaces; stacks; amusement park structures and rides; and artistic and monumental structures.

(b)(1) Steel erection activities include hoisting, laying out, placing, connecting, welding, burning, guying, bracing, bolting, plumbing and rigging structural steel, steel joists and metal buildings; installing metal decking, curtain walls, window walls, siding systems, miscellaneous metals, ornamental iron and similar materials; and moving point-to-point while performing these activities.

(2) The following activities are covered by this subpart when they occur during and are a part of steel erection activities: rigging, hoisting, laying out, placing, connecting, guying, bracing, dismantling, burning, welding, bolting, grinding, sealing, caulking, and all related activities for construction, alteration and/or repair of materials and assemblies such as structural steel; ferrous metals and alloys; non-ferrous metals and alloys; glass; plastics and synthetic composite materials; structural metal framing and related bracing and assemblies; anchoring devices; structural cabling; cable stays; permanent and temporary bents and towers; falsework for temporary supports of permanent steel members; stone and other non-precast concrete architectural materials mounted on steel frames; safety systems for steel erection; steel and metal joists; metal decking and raceway systems and accessories; metal

roofing and accessories; metal siding; bridge flooring; cold formed steel framing; elevator beams; grillage; shelf racks; multi-purpose supports; crane rails and accessories; miscellaneous, architectural and ornamental metals and metal work; ladders; railings; handrails; fences and gates; gratings; trench covers; floor plates; castings; sheet metal fabrications; metal panels and panel wall systems; louvers; column covers; enclosures and pockets; stairs; perforated metals; ornamental iron work, expansion control including bridge expansion joint assemblies; slide bearings; hydraulic structures; fascias; soffit panels; penthouse enclosures; skylights; joint fillers; gaskets; sealants and seals; doors; windows; hardware; detention/security equipment and doors, windows and hardware; conveying systems; building specialties; building equipment; machinery and plant equipment, furnishings and special construction.

(c) The duties of controlling contractors under this subpart include, but are not limited to, the duties specified in §§ 1926.752 (a) and (c), 1926.755(b)(2), 1926.759(b), and 1926.760(e).

§ 1926.751 Definitions.

Anchored bridging means that the steel joist bridging is connected to a bridging terminus point.

Bolted diagonal bridging means diagonal bridging that is bolted to a steel joist or joists.

Bridging clip means a device that is attached to the steel joist to allow the bolting of the bridging to the steel joist.

Bridging terminus point means a wall, a beam, tandem joists (with all bridging installed and a horizontal truss in the plane of the top chord) or other element at an end or intermediate point(s) of a line of bridging that provides an anchor point for the steel joist bridging.

Choker means a wire rope or synthetic fiber rigging assembly that is used to attach a load to a hoisting device.

Cold forming means the process of using press brakes, rolls, or other methods to shape steel into desired cross sections at room temperature.

Column means a load-carrying vertical member that is part of the primary skeletal framing system. Columns do not include posts.

Competent person (also defined in § 1926.32) means one who is capable of identifying existing and predictable hazards in the surroundings or working conditions which are unsanitary, hazardous, or dangerous to employees, and who has authorization to take prompt corrective measures to eliminate them.

Connector means an employee who, working with hoisting equipment, is placing and connecting structural members and/or components.

Constructibility means the ability to erect structural steel members in accordance with subpart R without having to alter the over-all structural design.

Construction load (for joist erection) means any load other than the weight of the employee(s), the joists and the bridging bundle.

Controlled Decking Zone (CDZ) means an area in which certain work (for example, initial installation and placement of metal decking) may take place without the use of guardrail systems, personal fall arrest systems, fall restraint systems, or safety net systems and where access to the zone is controlled.

Controlled load lowering means lowering a load by means of a mechanical hoist drum device that allows a hoisted load to be lowered with maximum control using the gear train or hydraulic components of the hoist mechanism. Controlled load lowering requires the use of the hoist drive motor, rather than the load hoist brake, to lower the load.

Controlling contractor means a prime contractor, general contractor, construction manager or any other legal entity which has the overall responsibility for the construction of the project—its planning, quality and completion.

Critical lift means a lift that (1) exceeds 75 percent of the rated capacity of the crane or derrick, or (2) requires the use of more than one crane or derrick.

Decking hole means a gap or void more than 2 inches (5.1 cm) in its least dimension and less than 12 inches (30.5 cm) in its greatest dimension in a floor, roof or other walking/working surface. Pre-engineered holes in cellular decking (for wires, cables, etc.) are not included in this definition.

Derrick floor means an elevated floor of a building or structure that has been designated to receive hoisted pieces of steel prior to final placement.

Double connection means an attachment method where the connection point is intended for two pieces of steel which share common bolts on either side of a central piece.

Double connection seat means a structural attachment that, during the installation of a double connection, supports the first member while the second member is connected.

Erection bridging means the bolted diagonal bridging that is required to be installed prior to releasing the hoisting cables from the steel joists.

Fall restraint system means a fall protection system that prevents the user from falling any distance. The system is comprised of either a body belt or body harness, along with an anchorage, connectors and other necessary equipment. The other components typically include a lanyard, and may also include a lifeline and other devices.

Final interior perimeter means the perimeter of a large permanent open space within a building such as an atrium or courtyard. This does not include openings for stairways, elevator shafts, etc.

Girt (in systems-engineered metal buildings) means a ''Z'' or ''C'' shaped member formed from sheet steel spanning between primary framing and supporting wall material.

Headache ball means a weighted hook that is used to attach loads to the hoist load line of the crane.

Hoisting equipment means commercially manufactured lifting equipment designed to lift and position a load of known weight to a location at some known elevation and horizontal distance from the equipment's center of rotation. ''Hoisting equipment'' includes but is not limited to cranes, derricks, tower cranes, barge-mounted derricks or cranes, gin poles and gantry hoist systems. A ''come-a-long'' (a mechanical device, usually consisting of a chain or cable attached at each end, that is used to facilitate movement of materials through leverage) is not considered ''hoisting equipment.''

Leading edge means the unprotected side and edge of a floor, roof, or formwork for a floor or other walking/working surface (such as deck) which changes location as additional floor, roof, decking or formwork sections are placed, formed or constructed.

Metal decking means a commercially manufactured, structural grade, cold rolled metal panel formed into a series of parallel ribs; for this subpart, this includes metal floor and roof decks, standing seam metal roofs, other metal roof systems and other products such as bar gratings, checker plate, expanded metal panels, and similar products. After installation and proper fastening, these decking materials serve a combination of functions including, but not limited to: a structural element designed in combination with the structure to resist, distribute and transfer loads, stiffen the structure and provide a diaphragm action; a walking/working surface; a form for concrete slabs; a support for roofing systems; and a finished floor or roof.

Multiple lift rigging means a rigging assembly manufactured by wire rope rigging suppliers that facilitates the attachment of up to five independent loads to the hoist rigging of a crane.

Opening means a gap or void 12 inches (30.5 cm) or more in its least dimension in a floor, roof or other walking/working surface. For the purposes of this subpart, skylights and smoke domes that do not meet the strength requirements of § 1926.754(e)(3) shall be regarded as openings.

Permanent floor means a structurally completed floor at any level or elevation (including slab on grade).

Personal fall arrest system means a system used to arrest an employee in a fall from a working level. A personal fall arrest system consists of an anchorage, connectors, a body harness and may include a lanyard, deceleration device, lifeline, or suitable combination of these. The use of a body belt for fall arrest is prohibited.

Positioning device system means a body belt or body harness rigged to allow an employee to be supported on an elevated, vertical surface, such as a wall or column and work with both hands free while leaning.

Post means a structural member with a longitudinal axis that is essentially vertical, that: (1) weighs 300 pounds or less and is axially loaded (a load presses down on the top end), or (2) is not axially loaded, but is laterally restrained by the above member. Posts typically support stair landings, wall framing, mezzanines and other substructures.

Project structural engineer of record means the registered, licensed professional responsible for the design of structural steel framing and whose seal appears on the structural contract documents.

Purlin (in systems-engineered metal buildings) means a ''Z'' or ''C'' shaped member formed from sheet steel spanning between primary framing and supporting roof material.

Qualified person (also defined in § 1926.32) means one who, by possession of a recognized degree, certificate, or professional standing, or who by extensive knowledge, training, and experience, has successfully demonstrated the ability to solve or resolve problems relating to the subject matter, the work, or the project.

Safety deck attachment means an initial attachment that is used to secure an initially placed sheet of decking to keep proper alignment and bearing with structural support members.

Shear connector means headed steel studs, steel bars, steel lugs, and similar devices which are attached to a structural member for the purpose of achieving composite action with concrete.

Steel erection means the construction, alteration or repair of steel buildings, bridges and other structures, including the installation of metal decking and all planking used during the process of erection.

Steel joist means an open web, secondary load-carrying member of 144 feet (43.9 m) or less, designed by the manufacturer, used for the support of floors and roofs. This does not include structural steel trusses or cold-formed joists.

Steel joist girder means an open web, primary load-carrying member, designed by the manufacturer, used for the support of floors and roofs. This does not include structural steel trusses.

Steel truss means an open web member designed of structural steel components by the project structural engineer of record. For the purposes of this subpart, a steel truss is considered equivalent to a solid web structural member.

Structural steel means a steel member, or a member made of a substitute material (such as, but not limited to, fiberglass, aluminum or composite members). These members include, but are not limited to, steel joists, joist girders, purlins, columns, beams, trusses, splices, seats, metal decking, girts, and all bridging, and cold formed metal framing which is integrated with the structural steel framing of a building.

Systems-engineered metal building means a metal, field-assembled building system consisting of framing, roof and wall coverings. Typically, many of these components are cold-formed shapes. These individual parts are fabricated in one or more manufacturing facilities and shipped to the job site for assembly into the final structure. The engineering design of the system is normally the responsibility of the systems-engineered metal building manufacturer.

Tank means a container for holding gases, liquids or solids.

Unprotected sides and edges means any side or edge (except at entrances to points of access) of a walking/working surface, for example a, floor, roof, ramp or runway, where there is no wall or guardrail system at least 39 inches (1.0 m) high.

§ 1926.752 Site layout, site-specific erection plan and construction sequence.

(a) *Approval to begin steel erection.* Before authorizing the commencement of steel erection, the controlling contractor shall ensure that the steel erector is provided with the following written notifications:

(1) The concrete in the footings, piers and walls and the mortar in the masonry piers and walls has attained, on the basis of an appropriate ASTM standard test method of field-cured samples, either 75 percent of the intended minimum compressive design strength or sufficient strength to support the loads imposed during steel erection.

(2) Any repairs, replacements and modifications to the anchor bolts were conducted in accordance with § 1926.755(b).

(b) *Commencement of steel erection.* A steel erection contractor shall not erect steel unless it has received written notification that the concrete in the footings, piers and walls or the mortar in the masonry piers and walls has attained, on the basis of an appropriate ASTM standard test method of field-cured samples, either 75 percent of the intended minimum compressive design strength or sufficient strength to support the loads imposed during steel erection.

(c) *Site layout.* The controlling contractor shall ensure that the following is provided and maintained:

(1) Adequate access roads into and through the site for the safe delivery and movement of derricks, cranes, trucks, other necessary equipment, and the material to be erected and means and methods for pedestrian and vehicular control. Exception: this requirement does not apply to roads outside of the construction site.

(2) A firm, properly graded, drained area, readily accessible to the work with adequate space for the safe storage of materials and the safe operation of the erector's equipment.

(d) *Pre-planning of overhead hoisting operations.* All hoisting operations in steel erection shall be pre-planned to ensure that the requirements of § 1926.753(d) are met.

(e) *Site-specific erection plan.* Where employers elect, due to conditions specific to the site, to develop alternate means and methods that provide employee protection in accordance with § 1926.753(c)(5), § 1926.757(a)(4) or § 1926.757(e)(4), a site-specific erection plan shall be developed by a qualified person and be available at the work site. Guidelines for establishing a site-specific erection plan are contained in Appendix A to this subpart.

§ 1926.753 Hoisting and rigging.

(a) All the provisions of § 1926.550 apply to hoisting and rigging with the exception of § 1926.550(g)(2).

(b) In addition, paragraphs (c) through (e) of this section apply regarding the

hazards associated with hoisting and rigging.

(c) *General.* (1) Pre-shift visual inspection of cranes.

(i) Cranes being used in steel erection activities shall be visually inspected prior to each shift by a competent person; the inspection shall include observation for deficiencies during operation. At a minimum this inspection shall include the following:

(A) All control mechanisms for maladjustments;

(B) Control and drive mechanism for excessive wear of components and contamination by lubricants, water or other foreign matter;

(C) Safety devices, including but not limited to boom angle indicators, boom stops, boom kick out devices, anti-two block devices, and load moment indicators where required;

(D) Air, hydraulic, and other pressurized lines for deterioration or leakage, particularly those which flex in normal operation;

(E) Hooks and latches for deformation, chemical damage, cracks, or wear;

(F) Wire rope reeving for compliance with hoisting equipment manufacturer's specifications;

(G) Electrical apparatus for malfunctioning, signs of excessive deterioration, dirt, or moisture accumulation;

(H) Hydraulic system for proper fluid level;

(I) Tires for proper inflation and condition;

(J) Ground conditions around the hoisting equipment for proper support, including ground settling under and around outriggers, ground water accumulation, or similar conditions;

(K) The hoisting equipment for level position; and

(L) The hoisting equipment for level position after each move and setup.

(ii) If any deficiency is identified, an immediate determination shall be made by the competent person as to whether the deficiency constitutes a hazard.

(iii) If the deficiency is determined to constitute a hazard, the hoisting equipment shall be removed from service until the deficiency has been corrected.

(iv) The operator shall be responsible for those operations under the operator's direct control. Whenever there is any doubt as to safety, the operator shall have the authority to stop and refuse to handle loads until safety has been assured.

(2) A qualified rigger (a rigger who is also a qualified person) shall inspect the rigging prior to each shift in accordance with § 1926.251.

(3) The headache ball, hook or load shall not be used to transport personnel except as provided in paragraph (c)(4) of this section.

(4) Cranes or derricks may be used to hoist employees on a personnel platform when work under this subpart is being conducted, provided that all provisions of § 1926.550 (except for § 1926.550(g)(2)) are met.

(5) Safety latches on hooks shall not be deactivated or made inoperable except:

(i) When a qualified rigger has determined that the hoisting and placing of purlins and single joists can be performed more safely by doing so; or

(ii) When equivalent protection is provided in a site-specific erection plan.

(d) *Working under loads.*

(1) Routes for suspended loads shall be pre-planned to ensure that no employee is required to work directly below a suspended load except for:

(i) Employees engaged in the initial connection of the steel; or

(ii) Employees necessary for the hooking or unhooking of the load.

(2) When working under suspended loads, the following criteria shall be met:

(i) Materials being hoisted shall be rigged to prevent unintentional displacement;

(ii) Hooks with self-closing safety latches or their equivalent shall be used to prevent components from slipping out of the hook; and

(iii) All loads shall be rigged by a qualified rigger

(e) *Multiple lift rigging procedure.*

(1) A multiple lift shall only be performed if the following criteria are met:

(i) A multiple lift rigging assembly is used;

(ii) A maximum of five members are hoisted per lift;

(iii) Only beams and similar structural members are lifted; and

(iv) All employees engaged in the multiple lift have been trained in these procedures in accordance with § 1926.761(c)(1).

(v) No crane is permitted to be used for a multiple lift where such use is contrary to the manufacturer's specifications and limitations.

(2) Components of the multiple lift rigging assembly shall be specifically designed and assembled with a maximum capacity for total assembly and for each individual attachment point. This capacity, certified by the manufacturer or a qualified rigger, shall be based on the manufacturer's specifications with a 5 to 1 safety factor for all components.

(3) The total load shall not exceed:

(i) The rated capacity of the hoisting equipment specified in the hoisting equipment load charts;

(ii) The rigging capacity specified in the rigging rating chart.

(4) The multiple lift rigging assembly shall be rigged with members:

(i) Attached at their center of gravity and maintained reasonably level;

(ii) Rigged from top down; and

(iii) Rigged at least 7 feet (2.1 m) apart.

(5) The members on the multiple lift rigging assembly shall be set from the bottom up.

(6) Controlled load lowering shall be used whenever the load is over the connectors.

§ 1926.754 Structural steel assembly.

(a) Structural stability shall be maintained at all times during the erection process.

(b) The following additional requirements shall apply for multi-story structures:

(1) The permanent floors shall be installed as the erection of structural members progresses, and there shall be not more than eight stories between the erection floor and the upper-most permanent floor, except where the structural integrity is maintained as a result of the design.

(2) At no time shall there be more than four floors or 48 feet (14.6 m), whichever is less, of unfinished bolting or welding above the foundation or uppermost permanently secured floor, except where the structural integrity is maintained as a result of the design.

(3) A fully planked or decked floor or nets shall be maintained within two stories or 30 feet (9.1 m), whichever is less, directly under any erection work being performed.

(c) *Walking/working surfaces.*

(1) *Shear connectors and other similar devices.*

(i) *Tripping hazards.* Shear connectors (such as headed steel studs, steel bars or steel lugs), reinforcing bars, deformed anchors or threaded studs shall not be attached to the top flanges of beams, joists or beam attachments so that they project vertically from or horizontally across the top flange of the member until after the metal decking, or other walking/working surface, has been installed.

(ii) *Installation of shear connectors on composite floors, roofs and bridge decks.* When shear connectors are used in construction of composite floors, roofs and bridge decks, employees shall lay out and install the shear connectors after the metal decking has been installed, using the metal decking as a working platform. Shear connectors

shall not be installed from within a controlled decking zone (CDZ), as specified in § 1926.760(c)(8).

(2) *Slip resistance of metal decking.* [Reserved]

(3) *Slip resistance of skeletal structural steel.* Workers shall not be permitted to walk the top surface of any structural steel member installed after July 18, 2006 that has been coated with paint or similar material unless documentation or certification that the coating has achieved a minimum average slip resistance of .50 when measured with an English XL tribometer or equivalent tester on a wetted surface at a testing laboratory is provided. Such documentation or certification shall be based on the appropriate ASTM standard test method conducted by a laboratory capable of performing the test. The results shall be available at the site and to the steel erector. (Appendix B to this subpart references appropriate ASTM standard test methods that may be used to comply with this paragraph (c)(3)).

(d) *Plumbing-up.*

(1) When deemed necessary by a competent person, plumbing-up equipment shall be installed in conjunction with the steel erection process to ensure the stability of the structure.

(2) When used, plumbing-up equipment shall be in place and properly installed before the structure is loaded with construction material such as loads of joists, bundles of decking or bundles of bridging.

(3) Plumbing-up equipment shall be removed only with the approval of a competent person.

(e) *Metal decking.*—(1) *Hoisting, landing and placing of metal decking bundles.*

(i) Bundle packaging and strapping shall not be used for hoisting unless specifically designed for that purpose.

(ii) If loose items such as dunnage, flashing, or other materials are placed on the top of metal decking bundles to be hoisted, such items shall be secured to the bundles.

(iii) Bundles of metal decking on joists shall be landed in accordance with § 1926.757(e)(4).

(iv) Metal decking bundles shall be landed on framing members so that enough support is provided to allow the bundles to be unbanded without dislodging the bundles from the supports.

(v) At the end of the shift or when environmental or jobsite conditions require, metal decking shall be secured against displacement.

(2) *Roof and floor holes and openings.* Metal decking at roof and floor holes and openings shall be installed as follows:

(i) Framed metal deck openings shall have structural members turned down to allow continuous deck installation except where not allowed by structural design constraints or constructibility.

(ii) Roof and floor holes and openings shall be decked over. Where large size, configuration or other structural design does not allow openings to be decked over (such as elevator shafts, stair wells, etc.) employees shall be protected in accordance with § 1926.760(a)(1).

(iii) Metal decking holes and openings shall not be cut until immediately prior to being permanently filled with the equipment or structure needed or intended to fulfill its specific use and which meets the strength requirements of paragraph (e)(3) of this section, or shall be immediately covered.

(3) *Covering roof and floor openings.*

(i) Covers for roof and floor openings shall be capable of supporting, without failure, twice the weight of the employees, equipment and materials that may be imposed on the cover at any one time.

(ii) All covers shall be secured when installed to prevent accidental displacement by the wind, equipment or employees.

(iii) All covers shall be painted with high-visibility paint or shall be marked with the word ''HOLE'' or ''COVER'' to provide warning of the hazard.

(iv) Smoke dome or skylight fixtures that have been installed, are not considered covers for the purpose of this section unless they meet the strength requirements of paragraph (e)(3)(i) of this section.

(4) *Decking gaps around columns.* Wire mesh, exterior plywood, or equivalent, shall be installed around columns where planks or metal decking do not fit tightly. The materials used must be of sufficient strength to provide fall protection for personnel and prevent objects from falling through.

(5) *Installation of metal decking.* (i) Except as provided in § 1926.760(c), metal decking shall be laid tightly and immediately secured upon placement to prevent accidental movement or displacement.

(ii) During initial placement, metal decking panels shall be placed to ensure full support by structural members.

(6) Derrick floors. (i) A derrick floor shall be fully decked and/or planked and the steel member connections completed to support the intended floor loading.

(ii) Temporary loads placed on a derrick floor shall be distributed over the underlying support members so as to prevent local overloading of the deck material.

§ 1926.755 Column anchorage.

(a) *General requirements for erection stability.* (1) All columns shall be anchored by a minimum of 4 anchor rods (anchor bolts).

(2) Each column anchor rod (anchor bolt) assembly, including the column-to-base plate weld and the column foundation, shall be designed to resist a minimum eccentric gravity load of 300 pounds (136.2 kg) located 18 inches (.46m) from the extreme outer face of the column in each direction at the top of the column shaft.

(3) Columns shall be set on level finished floors, pre-grouted leveling plates, leveling nuts, or shim packs which are adequate to transfer the construction loads.

(4) All columns shall be evaluated by a competent person to determine whether guying or bracing is needed; if guying or bracing is needed, it shall be installed.

(b) *Repair, replacement or field modification of anchor rods (anchor bolts).*

(1) Anchor rods (anchor bolts) shall not be repaired, replaced or field-modified without the approval of the project structural engineer of record.

(2) Prior to the erection of a column, the controlling contractor shall provide written notification to the steel erector if there has been any repair, replacement or modification of the anchor rods (anchor bolts) of that column.

§ 1926.756 Beams and columns.

(a) *General.* (1) During the final placing of solid web structural members, the load shall not be released from the hoisting line until the members are secured with at least two bolts per connection, of the same size and strength as shown in the erection drawings, drawn up wrench-tight or the equivalent as specified by the project structural engineer of record, except as specified in paragraph (b) of this section.

(2) A competent person shall determine if more than two bolts are necessary to ensure the stability of cantilevered members; if additional bolts are needed, they shall be installed.

(b) *Diagonal bracing.* Solid web structural members used as diagonal bracing shall be secured by at least one bolt per connection drawn up wrench-tight or the equivalent as specified by the project structural engineer of record.

(c) (1) *Double connections at columns and/or at beam webs over a column.* When two structural members on

opposite sides of a column web, or a beam web over a column, are connected sharing common connection holes, at least one bolt with its wrench-tight nut shall remain connected to the first member unless a shop-attached or field-attached seat or equivalent connection device is supplied with the member to secure the first member and prevent the column from being displaced (See Appendix H to this subpart for examples of equivalent connection devices).

(2) If a seat or equivalent device is used, the seat (or device) shall be designed to support the load during the double connection process. It shall be adequately bolted or welded to both a supporting member and the first member before the nuts on the shared bolts are removed to make the double connection.

(d) *Column splices.* Each column splice shall be designed to resist a minimum eccentric gravity load of 300 pounds (136.2 kg) located 18 inches (.46 m) from the extreme outer face of the column in each direction at the top of the column shaft.

(e) *Perimeter columns.* Perimeter columns shall not be erected unless:

(1) The perimeter columns extend a minimum of 48 inches (1.2 m) above the finished floor to permit installation of perimeter safety cables prior to erection of the next tier, except where constructibility does not allow (see Appendix F to this subpart);

(2) The perimeter columns have holes or other devices in or attached to perimeter columns at 42–45 inches (107–114 cm) above the finished floor and the midpoint between the finished floor and the top cable to permit installation of perimeter safety cables required by § 1926.760(a)(2), except where constructibility does not allow. (See Appendix F to this subpart).

§ 1926.757 Open web steel joists.

(a) *General.* (1) Except as provided in paragraph (a)(2) of this section, where steel joists are used and columns are not framed in at least two directions with solid web structural steel members, a steel joist shall be field-bolted at the column to provide lateral stability to the column during erection. For the installation of this joist:

(i) A vertical stabilizer plate shall be provided on each column for steel joists. The plate shall be a minimum of 6 inch by 6 inch (152 mm by 152 mm) and shall extend at least 3 inches (76 mm) below the bottom chord of the joist with a 13/16 inch (21 mm) hole to provide an attachment point for guying or plumbing cables.

(ii) The bottom chords of steel joists at columns shall be stabilized to prevent rotation during erection.

(iii) Hoisting cables shall not be released until the seat at each end of the steel joist is field-bolted, and each end of the bottom chord is restrained by the column stabilizer plate.

(2) Where constructibility does not allow a steel joist to be installed at the column:

(i) an alternate means of stabilizing joists shall be installed on both sides near the column and shall:

(A) provide stability equivalent to paragraph (a)(1) of this section;

(B) be designed by a qualified person;

(C) be shop installed; and

(D) be included in the erection drawings.

(ii) hoisting cables shall not be released until the seat at each end of the steel joist is field-bolted and the joist is stabilized.

(3) Where steel joists at or near columns span 60 feet (18.3 m) or less, the joist shall be designed with sufficient strength to allow one employee to release the hoisting cable without the need for erection bridging.

(4) Where steel joists at or near columns span more than 60 feet (18.3 m), the joists shall be set in tandem with all bridging installed unless an alternative method of erection, which provides equivalent stability to the steel joist, is designed by a qualified person and is included in the site-specific erection plan.

(5) A steel joist or steel joist girder shall not be placed on any support structure unless such structure is stabilized.

(6) When steel joist(s) are landed on a structure, they shall be secured to prevent unintentional displacement prior to installation.

(7) No modification that affects the strength of a steel joist or steel joist girder shall be made without the approval of the project structural engineer of record.

(8) *Field-bolted joists.* (i) Except for steel joists that have been pre-assembled into panels, connections of individual steel joists to steel structures in bays of 40 feet (12.2 m) or more shall be fabricated to allow for field bolting during erection.

(ii) These connections shall be field-bolted unless constructibility does not allow.

(9) Steel joists and steel joist girders shall not be used as anchorage points for a fall arrest system unless written approval to do so is obtained from a qualified person.

(10) A bridging terminus point shall be established before bridging is installed. (See Appendix C to this subpart.)

(b) *Attachment of steel joists and steel joist girders.* (1) Each end of ''K'' series steel joists shall be attached to the support structure with a minimum of two 1/8-inch (3 mm) fillet welds 1 inch (25 mm) long or with two 1/2-inch (13 mm) bolts, or the equivalent.

(2) Each end of ''LH'' and ''DLH'' series steel joists and steel joist girders shall be attached to the support structure with a minimum of two 1/4-inch (6 mm) fillet welds 2 inches (51 mm) long, or with two 3/4-inch (19 mm) bolts, or the equivalent.

(3) Except as provided in paragraph (b)(4) of this section, each steel joist shall be attached to the support structure, at least at one end on both sides of the seat, immediately upon placement in the final erection position and before additional joists are placed.

(4) Panels that have been pre-assembled from steel joists with bridging shall be attached to the structure at each corner before the hoisting cables are released.

(c) *Erection of steel joists.* (1) Both sides of the seat of one end of each steel joist that requires bridging under Tables A and B shall be attached to the support structure before hoisting cables are released.

(2) For joists over 60 feet, both ends of the joist shall be attached as specified in paragraph (b) of this section and the provisions of paragraph (d) of this section met before the hoisting cables are released.

(3) On steel joists that do not require erection bridging under Tables A and B, only one employee shall be allowed on the joist until all bridging is installed and anchored.

TABLE A.—ERECTION BRIDGING FOR SHORT SPAN JOISTS

Joist	Span
8L1	NM
10K1	NM
12K1	23–0
12K3	NM
12K5	NM
14K1	27–0
14K3	NM
14K4	NM
14K6	NM
16K2	29–0
16K3	30–0
16K4	32–0
16K5	32–0
16K6	NM
16K7	NM
16K9	NM
18K3	31–0
18K4	32–0
18K5	33–0
18K6	35–0

TABLE A.—ERECTION BRIDGING FOR SHORT SPAN JOISTS—Continued

Joist	Span
18K7	NM
18K9	NM
18K10	NM
20K3	32–0
20K4	34–0
20K5	34–0
20K6	36–0
20K7	39–0
20K9	39–0
20K10	NM
22K4	34–0
22K5	35–0
22K6	36–0
22K7	40–0
22K9	40–0
22K10	40–0
22K11	40–0
24K4	36–0
24K5	38–0
24K6	39–0
24K7	43–0
24K8	43–0
24K9	44–0
24K10	NM
24K12	NM
26K5	38–0
26K6	39–0
26K7	43–0
26K8	44–0
26K9	45–0
26K10	49–0
26K12	NM
28K6	40–0
28K7	43–0
28K8	44–0
28K9	45–0
28K10	49–0
28K12	53–0
30K7	44–0
30K8	45–0
30K9	45–0
30K10	50–0
30K11	52–0
30K12	54–0
10KCS1	NM
10KCS2	NM
10KCS3	NM
12KCS1	NM
12KCS2	NM
12KCS3	NM
14KCS1	NM
14KCS2	NM
14KCS3	NM
16KCS2	NM
16KCS3	NM
16KCS4	NM
16KCS5	NM
18KCS2	35–0
18KCS3	NM
18KCS4	NM
18KCS5	NM
20KCS2	36–0
20KCS3	39–0
20KCS4	NM
20KCS5	NM
22KCS2	36–0
22KCS3	40–0
22KCS4	NM
22KCS5	NM
24KCS2	39–0
24KCS3	44–0

TABLE A.—ERECTION BRIDGING FOR SHORT SPAN JOISTS—Continued

Joist	Span
24KCS4	NM
24KCS5	NM
26KCS2	39–0
26KCS3	44–0
26KCS4	NM
26KCS5	NM
28KCS2	40–0
28KCS3	45–0
28KCS4	53–0
28KCS5	53–0
30KC53	45–0
30KCS4	54–0
30KCS5	54–0

NM=diagonal bolted bridging not mandatory for joists under 40 feet.

TABLE B.—ERECTION BRIDGING FOR LONG SPAN JOISTS

Joist	Span
18LH02	33–0.
18LH03	NM.
18LH04	NM.
18LH05	NM.
18LH06	NM.
18LH07	NM.
18LH08	NM.
18LH09	NM.
20LH02	33–0.
20LH03	38–0.
20LH04	NM.
20LH05	NM.
20LH06	NM.
20LH07	NM.
20LH08	NM.
20LH09	NM.
20LH10	NM.
24LH03	35–0.
24LH04	39–0.
24LH05	40–0.
24LH06	45–0.
24LH07	NM.
24LH08	NM.
24LH09	NM.
24LH10	NM.
24LH11	NM.
28LH05	42–0.
28LH06	42–0.
28LH07	NM.
28LH08	NM.
28LH09	NM.
28LH10	NM.
28LH11	NM.
28LH12	NM.
28LH13	NM.
32LH06	47–0 through 60–0.
32LH07	47–0 through 60–0.
32LH08	55–0 through 60–0.
32LH09	NM through 60–0.
32LH10	NM through 60–0.
32LH11	NM through 60–0.
32LH12	NM through 60–0.
32LH13	NM through 60–0.
32LH14	NM through 60–0.
32LH15	NM through 60–0.
36LH07	47–0 through 60–0.
36LH08	47–0 through 60–0.
36LH09	57–0 through 60–0.
36LH10	NM through 60–0.

TABLE B.—ERECTION BRIDGING FOR LONG SPAN JOISTS—Continued

Joist	Span
36LH11	NM through 60–0.
36LH12	NM through 60–0.
36LH13	NM through 60–0.
36LH14	NM through 60–0.
36LH15	NM through 60–0.

NM = diagonal bolted bridging not mandatory for joists under 40 feet.

(4) Employees shall not be allowed on steel joists where the span of the steel joist is equal to or greater than the span shown in Tables A and B except in accordance with § 1926.757(d).

(5) When permanent bridging terminus points cannot be used during erection, additional temporary bridging terminus points are required to provide stability. (See appendix C of this subpart.)

(d) *Erection bridging.* (1) Where the span of the steel joist is equal to or greater than the span shown in Tables A and B, the following shall apply:

(i) A row of bolted diagonal erection bridging shall be installed near the midspan of the steel joist;

(ii) Hoisting cables shall not be released until this bolted diagonal erection bridging is installed and anchored; and

(iii) No more than one employee shall be allowed on these spans until all other bridging is installed and anchored.

(2) Where the span of the steel joist is over 60 feet (18.3 m) through 100 feet (30.5 m), the following shall apply:

(i) All rows of bridging shall be bolted diagonal bridging;

(ii) Two rows of bolted diagonal erection bridging shall be installed near the third points of the steel joist;

(iii) Hoisting cables shall not be released until this bolted diagonal erection bridging is installed and anchored; and

(iv) No more than two employees shall be allowed on these spans until all other bridging is installed and anchored.

(3) Where the span of the steel joist is over 100 feet (30.5 m) through 144 feet (43.9 m), the following shall apply:

(i) All rows of bridging shall be bolted diagonal bridging;

(ii) Hoisting cables shall not be released until all bridging is installed and anchored; and

(iii) No more than two employees shall be allowed on these spans until all bridging is installed and anchored.

(4) For steel members spanning over 144 feet (43.9 m), the erection methods used shall be in accordance with § 1926.756.

(5) Where any steel joist specified in paragraphs (c)(2) and (d)(1), (d)(2), and

(d)(3) of this section is a bottom chord bearing joist, a row of bolted diagonal bridging shall be provided near the support(s). This bridging shall be installed and anchored before the hoisting cable(s) is released.

(6) When bolted diagonal erection bridging is required by this section, the following shall apply:

(i) The bridging shall be indicated on the erection drawing;

(ii) The erection drawing shall be the exclusive indicator of the proper placement of this bridging;

(iii) Shop-installed bridging clips, or functional equivalents, shall be used where the bridging bolts to the steel joists;

(iv) When two pieces of bridging are attached to the steel joist by a common bolt, the nut that secures the first piece of bridging shall not be removed from the bolt for the attachment of the second; and

(v) Bridging attachments shall not protrude above the top chord of the steel joist.

(e) *Landing and placing loads.* (1) During the construction period, the employer placing a load on steel joists shall ensure that the load is distributed so as not to exceed the carrying capacity of any steel joist.

(2) Except for paragraph (e)(4) of this section, no construction loads are allowed on the steel joists until all bridging is installed and anchored and all joist-bearing ends are attached.

(3) The weight of a bundle of joist bridging shall not exceed a total of 1,000 pounds (454 kg). A bundle of joist bridging shall be placed on a minimum of three steel joists that are secured at one end. The edge of the bridging bundle shall be positioned within 1 foot (.30 m) of the secured end.

(4) No bundle of decking may be placed on steel joists until all bridging has been installed and anchored and all joist bearing ends attached, unless all of the following conditions are met:

(i) The employer has first determined from a qualified person and documented in a site-specific erection plan that the structure or portion of the structure is capable of supporting the load;

(ii) The bundle of decking is placed on a minimum of three steel joists;

(iii) The joists supporting the bundle of decking are attached at both ends;

(iv) At least one row of bridging is installed and anchored;

(v) The total weight of the bundle of decking does not exceed 4,000 pounds (1816 kg); and

(vi) Placement of the bundle of decking shall be in accordance with paragraph (e)(5) of this section.

(5) The edge of the construction load shall be placed within 1 foot (.30 m) of the bearing surface of the joist end.

§ 1926.758 Systems-engineered metal buildings.

(a) All of the requirements of this subpart apply to the erection of systems-engineered metal buildings except §§ 1926.755 (column anchorage) and 1926.757 (open web steel joists).

(b) Each structural column shall be anchored by a minimum of four anchor rods (anchor bolts).

(c) Rigid frames shall have 50 percent of their bolts or the number of bolts specified by the manufacturer (whichever is greater) installed and tightened on both sides of the web adjacent to each flange before the hoisting equipment is released.

(d) Construction loads shall not be placed on any structural steel framework unless such framework is safely bolted, welded or otherwise adequately secured.

(e) In girt and eave strut-to-frame connections, when girts or eave struts share common connection holes, at least one bolt with its wrench-tight nut shall remain connected to the first member unless a manufacturer-supplied, field-attached seat or similar connection device is present to secure the first member so that the girt or eave strut is always secured against displacement.

(f) Both ends of all steel joists or cold-formed joists shall be fully bolted and/or welded to the support structure before:

(1) Releasing the hoisting cables;

(2) Allowing an employee on the joists; or

(3) Allowing any construction loads on the joists.

(g) Purlins and girts shall not be used as an anchorage point for a fall arrest system unless written approval is obtained from a qualified person.

(h) Purlins may only be used as a walking/working surface when installing safety systems, after all permanent bridging has been installed and fall protection is provided.

(i) Construction loads may be placed only within a zone that is within 8 feet (2.5 m) of the center-line of the primary support member.

§ 1926.759 Falling object protection.

(a) *Securing loose items aloft.* All materials, equipment, and tools, which are not in use while aloft, shall be secured against accidental displacement.

(b) *Protection from falling objects other than materials being hoisted.* The controlling contractor shall bar other construction processes below steel erection unless overhead protection for the employees below is provided.

§ 1926.760 Fall protection.

(a) *General requirements.* (1) Except as provided by paragraph (a)(3) of this section, each employee engaged in a steel erection activity who is on a walking/working surface with an unprotected side or edge more than 15 feet (4.6 m) above a lower level shall be protected from fall hazards by guardrail systems, safety net systems, personal fall arrest systems, positioning device systems or fall restraint systems.

(2) *Perimeter safety cables.* On multi-story structures, perimeter safety cables shall be installed at the final interior and exterior perimeters of the floors as soon as the metal decking has been installed.

(3) Connectors and employees working in controlled decking zones shall be protected from fall hazards as provided in paragraphs (b) and (c) of this section, respectively.

(b) *Connectors.* Each connector shall:

(1) Be protected in accordance with paragraph (a)(1) of this section from fall hazards of more than two stories or 30 feet (9.1 m) above a lower level, whichever is less;

(2) Have completed connector training in accordance with § 1926.761; and

(3) Be provided, at heights over 15 and up to 30 feet above a lower level, with a personal fall arrest system, positioning device system or fall restraint system and wear the equipment necessary to be able to be tied off; or be provided with other means of protection from fall hazards in accordance with paragraph (a)(1) of this section.

(c) *Controlled Decking Zone (CDZ).* A controlled decking zone may be established in that area of the structure over 15 and up to 30 feet above a lower level where metal decking is initially being installed and forms the leading edge of a work area. In each CDZ, the following shall apply:

(1) Each employee working at the leading edge in a CDZ shall be protected from fall hazards of more than two stories or 30 feet (9.1 m), whichever is less.

(2) Access to a CDZ shall be limited to only those employees engaged in leading edge work.

(3) The boundaries of a CDZ shall be designated and clearly marked. The CDZ shall not be more than 90 feet (27.4 m) wide and 90 (27.4 m) feet deep from any leading edge. The CDZ shall be marked by the use of control lines or the equivalent. Examples of acceptable procedures for demarcating CDZ's can be found in Appendix D to this subpart.

(4) Each employee working in a CDZ shall have completed CDZ training in accordance with § 1926.761.

(5) Unsecured decking in a CDZ shall not exceed 3,000 square feet (914.4 m^2).

(6) Safety deck attachments shall be performed in the CDZ from the leading edge back to the control line and shall have at least two attachments for each metal decking panel.

(7) Final deck attachments and installation of shear connectors shall not be performed in the CDZ.

(d) *Criteria for fall protection equipment.* (1) Guardrail systems, safety net systems, personal fall arrest systems, positioning device systems and their components shall conform to the criteria in § 1926.502 (see Appendix G to this subpart).

(2) Fall arrest system components shall be used in fall restraint systems and shall conform to the criteria in § 1926.502 (see Appendix G). Either body belts or body harnesses shall be used in fall restraint systems.

(3) Perimeter safety cables shall meet the criteria for guardrail systems in § 1926.502 (see Appendix G).

(e) *Custody of fall protection.* Fall protection provided by the steel erector shall remain in the area where steel erection activity has been completed, to be used by other trades, only if the controlling contractor or its authorized representative:

(1) Has directed the steel erector to leave the fall protection in place; and

(2) Has inspected and accepted control and responsibility of the fall protection prior to authorizing persons other than steel erectors to work in the area.

§ 1926.761 Training.

The following provisions supplement the requirements of § 1926.21 regarding the hazards addressed in this subpart.

(a) *Training personnel.* Training required by this section shall be provided by a qualified person(s).

(b) *Fall hazard training.* The employer shall provide a training program for all employees exposed to fall hazards. The program shall include training and instruction in the following areas:

(1) The recognition and identification of fall hazards in the work area;

(2) The use and operation of guardrail systems (including perimeter safety cable systems), personal fall arrest systems, positioning device systems, fall restraint systems, safety net systems, and other protection to be used;

(3) The correct procedures for erecting, maintaining, disassembling, and inspecting the fall protection systems to be used;

(4) The procedures to be followed to prevent falls to lower levels and through or into holes and openings in walking/working surfaces and walls; and

(5) The fall protection requirements of this subpart.

(c) *Special training programs.* In addition to the training required in paragraphs (a) and (b) of this section, the employer shall provide special training to employees engaged in the following activities.

(1) *Multiple lift rigging procedure.* The employer shall ensure that each employee who performs multiple lift rigging has been provided training in the following areas:

(i) The nature of the hazards associated with multiple lifts; and

(ii) The proper procedures and equipment to perform multiple lifts required by § 1926.753(e).

(2) *Connector procedures.* The employer shall ensure that each connector has been provided training in the following areas:

(i) The nature of the hazards associated with connecting; and

(ii) The establishment, access, proper connecting techniques and work practices required by § 1926.756(c) and § 1926.760(b).

(3) *Controlled Decking Zone Procedures.* Where CDZs are being used, the employer shall assure that each employee has been provided training in the following areas:

(i) The nature of the hazards associated with work within a controlled decking zone; and

(ii) The establishment, access, proper installation techniques and work practices required by § 1926.760(c) and § 1926.754(e).

Appendix A to Subpart R—Guidelines for Establishing the Components of a Site-specific Erection Plan: Non-mandatory Guidelines for Complying with § 1926.752(e).

(a) *General.* This appendix serves as a guideline to assist employers who elect to develop a site-specific erection plan in accordance with § 1926.752(e) with alternate means and methods to provide employee protection in accordance with § 1926.752(e), § 1926.753(c)(5), § 1926.757(a)(4) and § 1926.757(e)(4).

(b) *Development of a site-specific erection plan.* Pre-construction conference(s) and site inspection(s) are held between the erector and the controlling contractor, and others such as the project engineer and fabricator before the start of steel erection. The purpose of such conference(s) is to develop and review the site-specific erection plan that will meet the requirements of this section.

(c) *Components of a site-specific erection plan.* In developing a site-specific erection plan, a steel erector considers the following elements:

(1) The sequence of erection activity, developed in coordination with the controlling contractor, that includes the following:

(i) Material deliveries:

(ii) Material staging and storage; and

(iii) Coordination with other trades and construction activities.

(2) A description of the crane and derrick selection and placement procedures, including the following:

(i) Site preparation;

(ii) Path for overhead loads; and

(iii) Critical lifts, including rigging supplies and equipment.

(3) A description of steel erection activities and procedures, including the following:

(i) Stability considerations requiring temporary bracing and guying;

(ii) Erection bridging terminus point;

(iii) Anchor rod (anchor bolt) notifications regarding repair, replacement and modifications;

(iv) Columns and beams (including joists and purlins);

(v) Connections;

(vi) Decking; and

(vii) Ornamental and miscellaneous iron.

(4) A description of the fall protection procedures that will be used to comply with § 1926.760.

(5) A description of the procedures that will be used to comply with § 1926.759.

(6) A description of the special procedures required for hazardous non-routine tasks.

(7) A certification for each employee who has received training for performing steel erection operations as required by § 1926.761.

(8) A list of the qualified and competent persons.

(9) A description of the procedures that will be utilized in the event of rescue or emergency response.

(d) *Other plan information.* The plan:

(1) Includes the identification of the site and project; and

(2) Is signed and dated by the qualified person(s) responsible for its preparation and modification.

Appendix B to Subpart R—Acceptable Test Methods for Testing Slip-Resistance of Walking/Working Surfaces (§ 1926.754(c)(3)). Non-Mandatory Guidelines for Complying With § 1926.754(c)(3).

The following references provide acceptable test methods for complying with the requirements of § 1926.754(c)(3).

- Standard Test Method for Using a Portable Inclineable Articulated Strut Slip Tester (PIAST)(ASTM F1677–96)
- Standard Test Method for Using a Variable Incidence Tribometer (VIT)(ASTM F1679–96)

BILLING CODE 4510–26–P

Appendix C to Subpart R -- Illustrations of Bridging Terminus Points: Non-mandatory Guidelines for Complying with §§1926.757(a)(10) and 1926.757(c)(5).

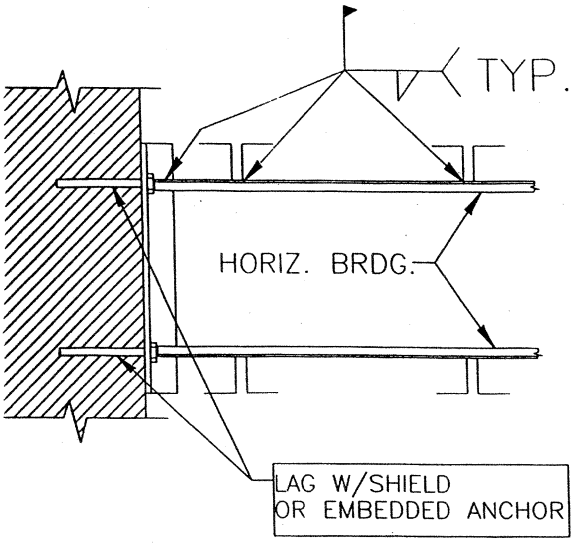

HORIZONTAL BRIDGING TERMINUS AT WALL

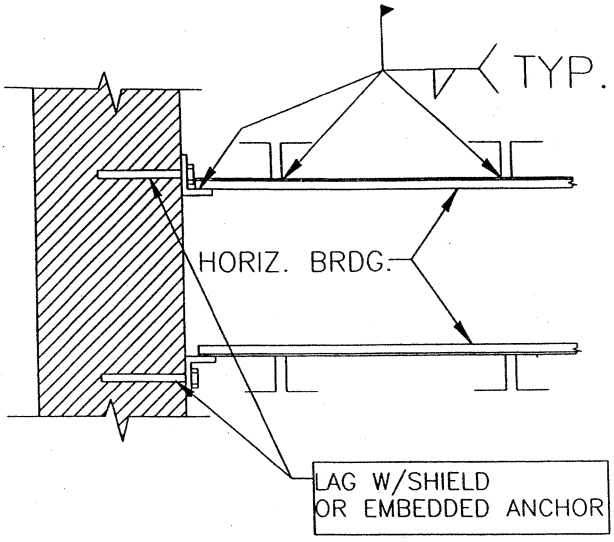

HORIZONTAL BRIDGING TERMINUS AT WALL

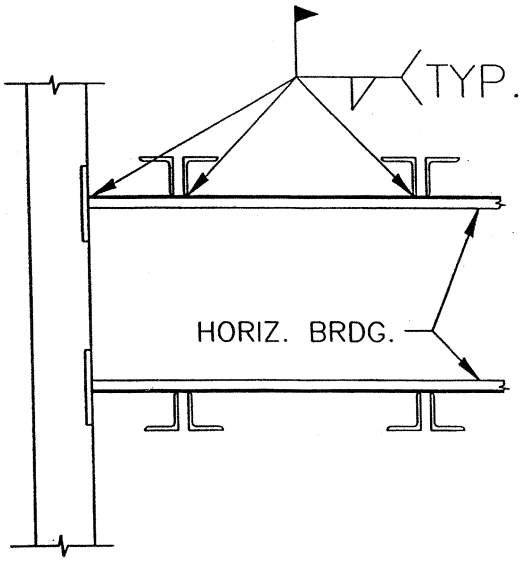

HORIZONTAL BRIDGING TERMINUS AT PANEL WALL

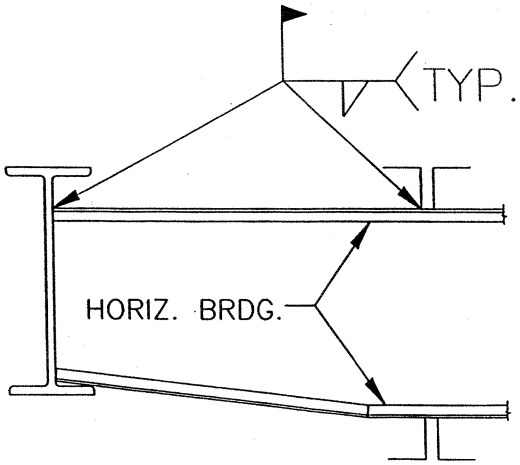

HORIZONTAL BRIDGING TERMINUS AT STRUCTURAL SHAPE

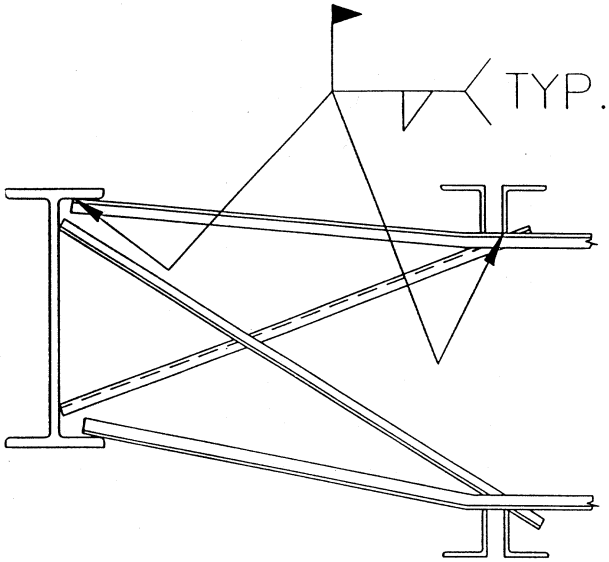

HORIZONTAL BRIDGING TERMINUS AT STRUCTURAL SHAPE WITH OPTIONAL "X–BRIDGING"

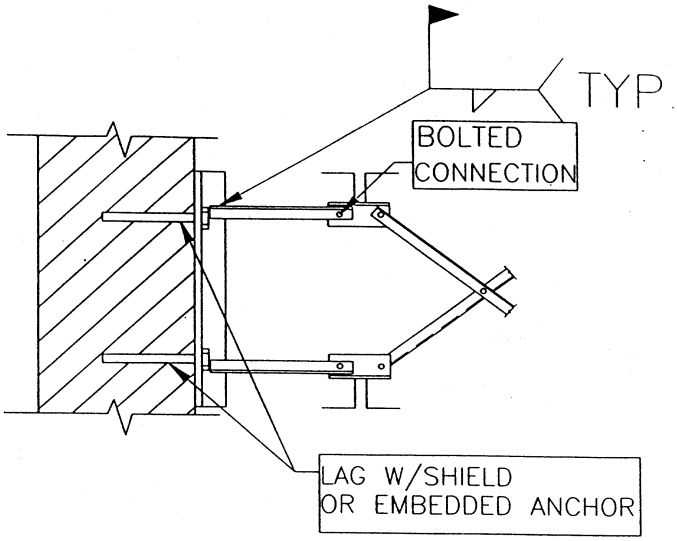

BOLTED DIAGONAL BRIDGING TERMINUS AT WALL

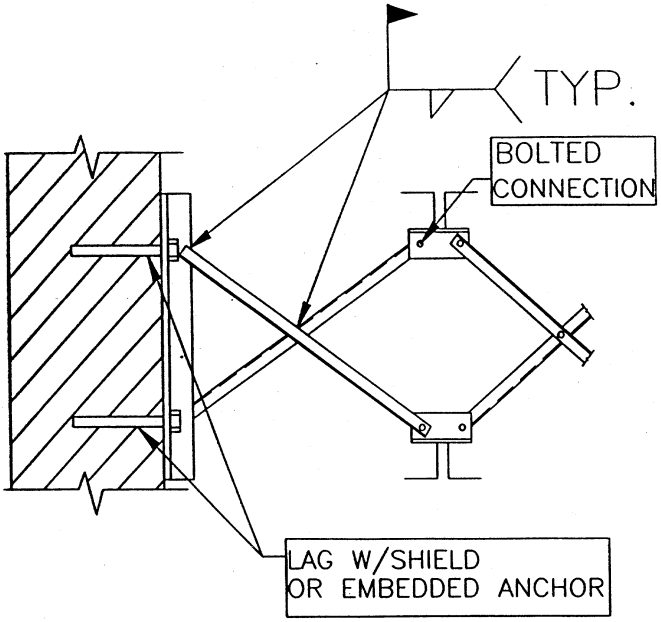

BOLTED DIAGONAL BRIDGING TERMINUS AT WALL

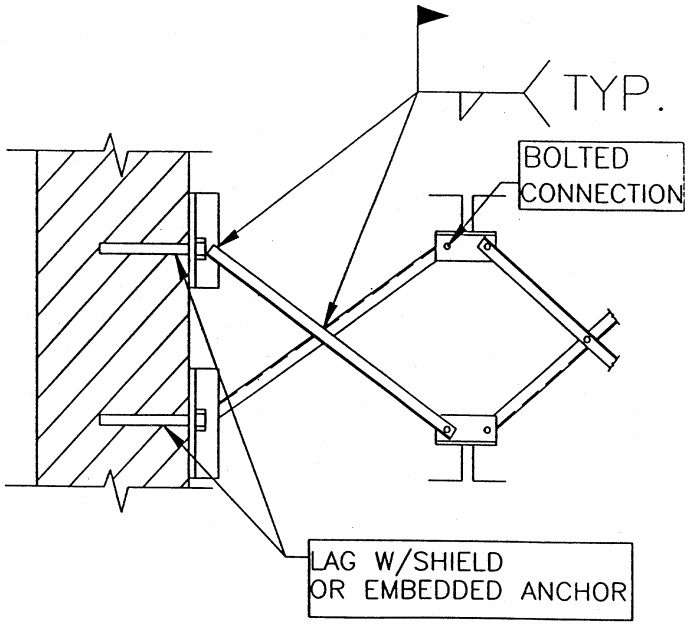

BOLTED DIAGONAL BRIDGING TERMINUS AT WALL

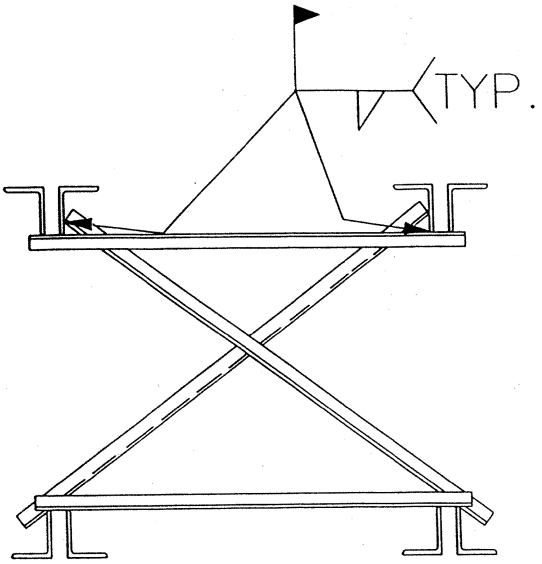

JOISTS PAIR BRIDGING TERMINUS POINT

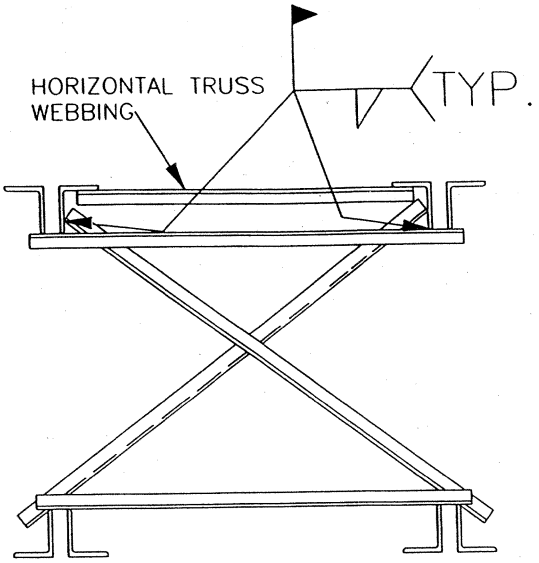

JOISTS PAIR BRIDGING TERMINUS POINT W/HORIZ. TRUSS

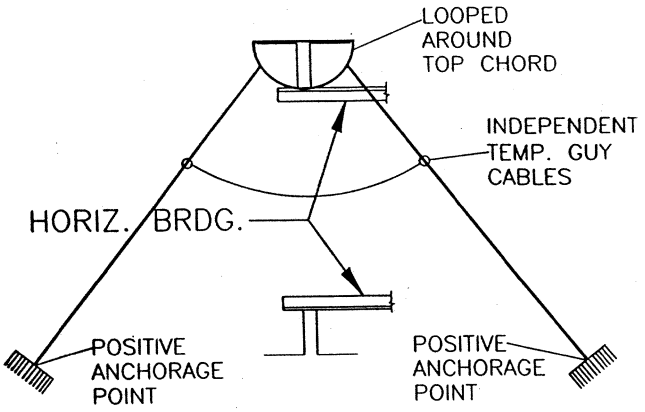

HORIZONTAL BRIDGING TERMINUS POINT SECURED BY TEMP. GUY CABLES

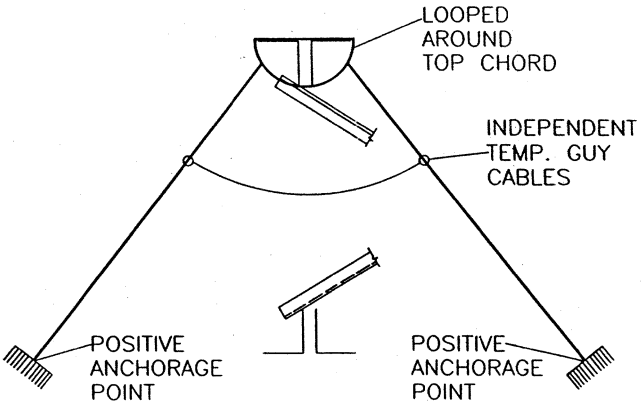

DIAGONAL BRIDGING TERMINUS POINT SECURED BY TEMP. GUY CABLES

BILLING CODE 4510–26–C

Appendix D to Subpart R—Illustration of the Use of Control Lines to Demarcate Controlled Decking Zones (CDZs): Non-mandatory Guidelines for Complying with § 1926.760(c)(3)

(1) When used to control access to areas where leading edge and initial securement of metal deck and other operations connected with leading edge work are taking place, the controlled decking zone (CDZ) is defined by a control line or by any other means that restricts access.

(i) A control line for a CDZ is erected not less than 6 feet (1.8 m) nor more than 90 feet (27.4 m) from the leading edge.

(ii) Control lines extend along the entire length of the unprotected or leading edge and are approximately parallel to the unprotected or leading edge.

(iii) Control lines are connected on each side to a guardrail system, wall, stanchion or other suitable anchorage.

(2) Control lines consist of ropes, wires, tapes, or equivalent materials, and supporting stanchions as follows:

(i) Each line is rigged and supported in such a way that its lowest point (including sag) is not less than 39 inches (1.0 m) from the walking/working surface and its highest point is not more than 45 inches (1.3 m) from the walking/working surface.

(ii) Each line has a minimum breaking strength of 200 pounds (90.8 kg).

Appendix E to Subpart R—Training: Non-mandatory Guidelines for Complying with § 1926.761

The training requirements of § 1926.761 will be deemed to have been met if employees have completed a training course on steel erection, including instruction in the provisions of this standard, that has been approved by the U.S. Department of Labor Bureau of Apprenticeship.

Appendix F to Subpart R—Perimeter Columns: Non-Mandatory Guidelines for Complying with § 1926.756(e) To Protect the Unprotected Side or Edge of a Walking/Working Surface

In multi-story structures, when holes in the column web are used for perimeter safety cables, the column splice must be placed sufficiently high so as not to interfere with any attachments to the column necessary for the column splice. Column splices are recommended to be placed at every other or fourth levels as design allows. Column splices at third levels are detrimental to the erection process and should be avoided if possible.

Appendix G to Subpart R—§ 1926.502 (b)–(e) Fall Protection Systems Criteria and Practices

(b) ''Guardrail systems.'' Guardrail systems and their use shall comply with the following provisions:

(1) Top edge height of top rails, or equivalent guardrail system members, shall be 42 inches (1.1 m) plus or minus 3 inches (8 cm) above the walking/working level. When conditions warrant, the height of the top edge may exceed the 45-inch height, provided the guardrail system meets all other criteria of this paragraph (§ 1926.502(b)).

Note: When employees are using stilts, the top edge height of the top rail, or equivalent member, shall be increased an amount equal to the height of the stilts.

(2) Midrails, screens, mesh, intermediate vertical members, or equivalent intermediate structural members shall be installed between the top edge of the guardrail system and the walking/working surface when there is no wall or parapet wall at least 21 inches (53 cm) high.

(i) Midrails, when used, shall be installed at a height midway between the top edge of the guardrail system and the walking/working level.

(ii) Screens and mesh, when used, shall extend from the top rail to the walking/working level and along the entire opening between top rail supports.

(iii) Intermediate members (such as balusters), when used between posts, shall be not more than 19 inches (48 cm) apart.

(iv) Other structural members (such as additional midrails and architectural panels) shall be installed such that there are no openings in the guardrail system that are more than 19 inches (.5 m) wide.

(3) Guardrail systems shall be capable of withstanding, without failure, a force of at least 200 pounds (890 N) applied within 2 inches (5.1 cm) of the top edge, in any outward or downward direction, at any point along the top edge.

(4) When the 200 pound (890 N) test load specified in paragraph (b)(3) of this section (§ 1926.502) is applied in a downward direction, the top edge of the guardrail shall not deflect to a height less than 39 inches (1.0 m) above the walking/working level. Guardrail system components selected and constructed in accordance with the appendix B to subpart M of this part will be deemed to meet this requirement.

(5) Midrails, screens, mesh, intermediate vertical members, solid panels, and equivalent structural members shall be capable of withstanding, without failure, a force of at least 150 pounds (666 N) applied in any downward or outward direction at any point along the midrail or other member.

(6) Guardrail systems shall be so surfaced as to prevent injury to an employee from punctures or lacerations, and to prevent snagging of clothing.

(7) The ends of all top rails and midrails shall not overhang the terminal posts, except where such overhang does not constitute a projection hazard.

(8) Steel banding and plastic banding shall not be used as top rails or midrails.

(9) Top rails and midrails shall be at least one-quarter inch (0.6 cm) nominal diameter or thickness to prevent cuts and lacerations. If wire rope is used for top rails, it shall be flagged at not more than 6-foot intervals with high-visibility material.

(10) When guardrail systems are used at hoisting areas, a chain, gate or removable guardrail section shall be placed across the access opening between guardrail sections when hoisting operations are not taking place.

(11) When guardrail systems are used at holes, they shall be erected on all unprotected sides or edges of the hole.

(12) When guardrail systems are used around holes used for the passage of materials, the hole shall have not more than two sides provided with removable guardrail sections to allow the passage of materials. When the hole is not in use, it shall be closed over with a cover, or a guardrail system shall be provided along all unprotected sides or edges.

(13) When guardrail systems are used around holes which are used as points of access (such as ladderways), they shall be provided with a gate, or be so offset that a person cannot walk directly into the hole.

(14) Guardrail systems used on ramps and runways shall be erected along each unprotected side or edge.

(15) Manila, plastic or synthetic rope being used for top rails or midrails shall be inspected as frequently as necessary to ensure that it continues to meet the strength requirements of paragraph (b)(3) of this section (§ 1926.502).

(c) *Safety net systems.* Safety net systems and their use shall comply with the following provisions:

(1) Safety nets shall be installed as close as practicable under the walking/working surface on which employees are working, but in no case more than 30 feet (9.1 m) below such level. When nets are used on bridges, the potential fall area from the walking/working surface to the net shall be unobstructed.

(2) Safety nets shall extend outward from the outermost projection of the work surface as follows:

Vertical distance from working level to horizontal plane of net	Minimum required horizontal distance of outer edge of net from the edge of the working surface
Up to 5 feet	8 feet
More than 5 feet up to 10 feet	10 feet
More than 10 feet	13 feet

(3) Safety nets shall be installed with sufficient clearance under them to prevent contact with the surface or structures below when subjected to an impact force equal to the drop test specified in paragraph (4) of this section [§ 1926.502].

(4) Safety nets and their installations shall be capable of absorbing an impact force equal to that produced by the drop test specified in paragraph (c)(4)(i) of this section [§ 1926.502].

(i) Except as provided in paragraph (c)(4)(ii) of this section (§ 1926.502), safety nets and safety net installations shall be drop-tested at the jobsite after initial installation and before being used as a fall protection system, whenever relocated, after major repair, and at 6-month intervals if left in one place. The drop-test shall consist of a 400 pound (180 kg) bag of sand 30+ or −2 inches (76+ or −5 cm) in diameter dropped into the net from the highest walking/working surface at which employees are exposed to fall hazards, but not from less than 42 inches (1.1 m) above that level.

(ii) When the employer can demonstrate that it is unreasonable to perform the drop-test required by paragraph (c)(4)(i) of this section (§ 1926.502), the employer (or a designated competent person) shall certify that the net and net installation is in compliance with the provisions of paragraphs (c)(3) and (c)(4)(i) of this section (§ 1926.502) by preparing a certification record prior to the net being used as a fall protection system. The certification record must include an identification of the net and net installation for which the certification record is being prepared; the date that it was determined that the identified net and net installation were in compliance with paragraph (c)(3) of this section (§ 1926.502) and the signature of the person making the determination and certification. The most recent certification record for each net and net installation shall be available at the jobsite for inspection.

(5) Defective nets shall not be used. Safety nets shall be inspected at least once a week for wear, damage, and other deterioration. Defective components shall be removed from service. Safety nets shall also be inspected after any occurrence which could affect the integrity of the safety net system.

(6) Materials, scrap pieces, equipment, and tools which have fallen into the safety net shall be removed as soon as possible from the net and at least before the next work shift.

(7) The maximum size of each safety net mesh opening shall not exceed 36 square inches (230 cm) nor be longer than 6 inches (15 cm) on any side, and the opening, measured center-to-center of mesh ropes or webbing, shall not be longer than 6 inches (15 cm). All mesh crossings shall be secured to prevent enlargement of the mesh opening.

(8) Each safety net (or section of it) shall have a border rope for webbing with a minimum breaking strength of 5,000 pounds (22.2 kN).

(9) Connections between safety net panels shall be as strong as integral net components and shall be spaced not more than 6 inches (15 cm) apart.

(d) ''Personal fall arrest systems.'' Personal fall arrest systems and their use shall comply with the provisions set forth below. Effective January 1, 1998, body belts are not acceptable as part of a personal fall arrest system.

Note: The use of a body belt in a positioning device system is acceptable and is regulated under paragraph (e) of this section (§ 1926.502).

(1) Connectors shall be drop forged, pressed or formed steel, or made of equivalent materials.

(2) Connectors shall have a corrosion-resistant finish, and all surfaces and edges shall be smooth to prevent damage to interfacing parts of the system.

(3) Dee-rings and snaphooks shall have a minimum tensile strength of 5,000 pounds (22.2 kN).

(4) Dee-rings and snaphooks shall be proof-tested to a minimum tensile load of 3,600 pounds (16 kN) without cracking, breaking, or taking permanent deformation.

(5) Snaphooks shall be sized to be compatible with the member to which they are connected to prevent unintentional disengagement of the snaphook by depression of the snaphook keeper by the connected member, or shall be a locking type snaphook designed and used to prevent disengagement of the snaphook by the contact of the snaphook keeper by the connected member. Effective January 1, 1998, only locking type snaphooks shall be used.

(6) Unless the snaphook is a locking type and designed for the following connections, snaphooks shall not be engaged:

(i) directly to webbing, rope or wire rope;

(ii) to each other;

(iii) to a dee-ring to which another snaphook or other connector is attached;

(iv) to a horizontal lifeline; or

(v) to any object which is incompatibly shaped or dimensioned in relation to the snaphook such that unintentional disengagement could occur by the connected object being able to depress the snaphook keeper and release itself.

(7) On suspended scaffolds or similar work platforms with horizontal lifelines which may become vertical lifelines, the devices used to connect to a horizontal lifeline shall be capable of locking in both directions on the lifeline.

(8) Horizontal lifelines shall be designed, installed, and used, under the supervision of a qualified person, as part of a complete personal fall arrest system, which maintains a safety factor of at least two.

(9) Lanyards and vertical lifelines shall have a minimum breaking strength of 5,000 pounds (22.2 kN).

(10)(i) Except as provided in paragraph (d)(10)(ii) of this section [§ 1926.502], when vertical lifelines are used, each employee shall be attached to a separate lifeline.

(ii) During the construction of elevator shafts, two employees may be attached to the same lifeline in the hoistway, provided both employees are working atop a false car that is equipped with guardrails; the strength of the lifeline is 10,000 pounds [5,000 pounds per employee attached] (44.4 kN); and all other criteria specified in this paragraph for lifelines have been met.

(11) Lifelines shall be protected against being cut or abraded.

(12) Self-retracting lifelines and lanyards which automatically limit free fall distance to 2 feet (0.61 m) or less shall be capable of sustaining a minimum tensile load of 3,000 pounds (13.3 kN) applied to the device with the lifeline or lanyard in the fully extended position.

(13) Self-retracting lifelines and lanyards which do not limit free fall distance to 2 feet (0.61 m) or less, ripstitch lanyards, and tearing and deforming lanyards shall be capable of sustaining a minimum tensile load of 5,000 pounds (22.2 kN) applied to the device with the lifeline or lanyard in the fully extended position.

(14) Ropes and straps (webbing) used in lanyards, lifelines, and strength components of body belts and body harnesses shall be made from synthetic fibers.

(15) Anchorages used for attachment of personal fall arrest equipment shall be independent of any anchorage being used to support or suspend platforms and capable of supporting at least 5,000 pounds (22.2 kN) per employee attached, or shall be designed, installed, and used as follows:

(i) as part of a complete personal fall arrest system which maintains a safety factor of at least two; and

(ii) under the supervision of a qualified person.

(16) Personal fall arrest systems, when stopping a fall, shall:

(i) limit maximum arresting force on an employee to 900 pounds (4 kN) when used with a body belt;

(ii) limit maximum arresting force on an employee to 1,800 pounds (8 kN) when used with a body harness;

(iii) be rigged such that an employee can neither free fall more than 6 feet (1.8 m), nor contact any lower level;

(iv) bring an employee to a complete stop and limit maximum deceleration distance an employee travels to 3.5 feet (1.07 m); and,

(v) have sufficient strength to withstand twice the potential impact energy of an employee free falling a distance of 6 feet (1.8 m), or the free fall distance permitted by the system, whichever is less.

Note: If the personal fall arrest system meets the criteria and protocols contained in Appendix C to subpart M, and if the system is being used by an employee having a combined person and tool weight of less than 310 pounds (140 kg), the system will be considered to be in compliance with the provisions of paragraph (d)(16) of this section [§ 1926.502]. If the system is used by an employee having a combined tool and body weight of 310 pounds (140 kg) or more, then the employer must appropriately modify the criteria and protocols of the Appendix to provide proper protection for such heavier weights, or the system will not be deemed to be in compliance with the requirements of paragraph (d)(16) of this section (§ 1926.502).

(17) The attachment point of the body belt shall be located in the center of the wearer's back. The attachment point of the body harness shall be located in the center of the wearer's back near shoulder level, or above the wearer's head.

(18) Body belts, harnesses, and components shall be used only for employee

protection (as part of a personal fall arrest system or positioning device system) and not to hoist materials.

(19) Personal fall arrest systems and components subjected to impact loading shall be immediately removed from service and shall not be used again for employee protection until inspected and determined by a competent person to be undamaged and suitable for reuse.

(20) The employer shall provide for prompt rescue of employees in the event of a fall or shall assure that employees are able to rescue themselves.

(21) Personal fall arrest systems shall be inspected prior to each use for wear, damage and other deterioration, and defective components shall be removed from service.

(22) Body belts shall be at least one and five-eighths (1⅝) inches (4.1 cm) wide.

(23) Personal fall arrest systems shall not be attached to guardrail systems, nor shall they be attached to hoists except as specified in other subparts of this Part.

(24) When a personal fall arrest system is used at hoist areas, it shall be rigged to allow the movement of the employee only as far as the edge of the walking/working surface.

(e) *Positioning device systems.* Positioning device systems and their use shall conform to the following provisions:

(1) Positioning devices shall be rigged such that an employee cannot free fall more than 2 feet (.9 m).

(2) Positioning devices shall be secured to an anchorage capable of supporting at least twice the potential impact load of an employee's fall or 3,000 pounds (13.3 kN), whichever is greater.

(3) Connectors shall be drop forged, pressed or formed steel, or made of equivalent materials.

(4) Connectors shall have a corrosion-resistant finish, and all surfaces and edges shall be smooth to prevent damage to interfacing parts of this system.

(5) Connecting assemblies shall have a minimum tensile strength of 5,000 pounds (22.2 kN)

(6) Dee-rings and snaphooks shall be proof-tested to a minimum tensile load of 3,600 pounds (16 kN) without cracking, breaking, or taking permanent deformation.

(7) Snaphooks shall be sized to be compatible with the member to which they are connected to prevent unintentional disengagement of the snaphook by depression of the snaphook keeper by the connected member, or shall be a locking type snaphook designed and used to prevent disengagement of the snaphook by the contact of the snaphook keeper by the connected member. As of January 1, 1998, only locking type snaphooks shall be used.

(8) Unless the snaphook is a locking type and designed for the following connections, snaphooks shall not be engaged:

(i) directly to webbing, rope or wire rope;

(ii) to each other;

(iii) to a dee-ring to which another snaphook or other connector is attached;

(iv) to a horizontal lifeline; or to depress the snaphook keeper and release itself.

(v) to any object which is incompatibly shaped or dimensioned in relation to the snaphook such that unintentional disengagement could occur by the connected object being able to depress the snaphook keeper and release itself.

(9) Positioning device systems shall be inspected prior to each use for wear, damage, and other deterioration, and defective components shall be removed from service.

(10) Body belts, harnesses, and components shall be used only for employee protection (as part of a personal fall arrest system or positioning device system) and not to hoist materials.

Appendix H to Subpart R--- Double Connections: Illustration of a Clipped End Connection and a Staggered Connection: Non-Mandatory Guidelines for Complying with §1926.756(c)(1).

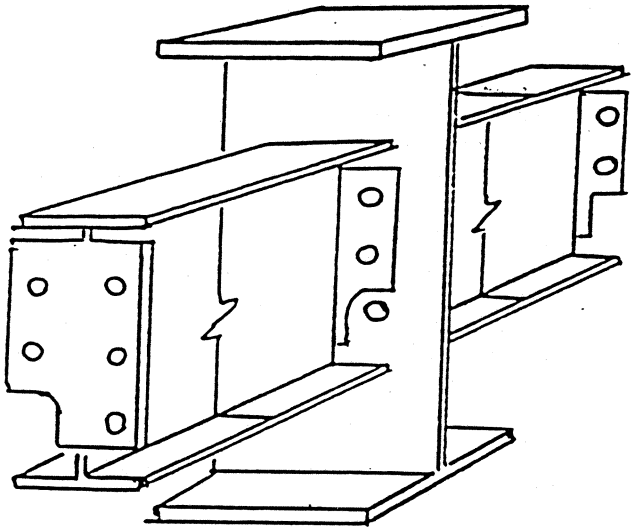

Clipped end connections are connection material on the end of a structural member which has a notch at the bottom and/or top to allow the bolt(s) of the first member placed on the opposite side of the central member to remain in place. The notch(es)

fits around the nut or bolt head of the opposing member to allow the second member to be bolted up without removing the bolt(s) holding the first member.

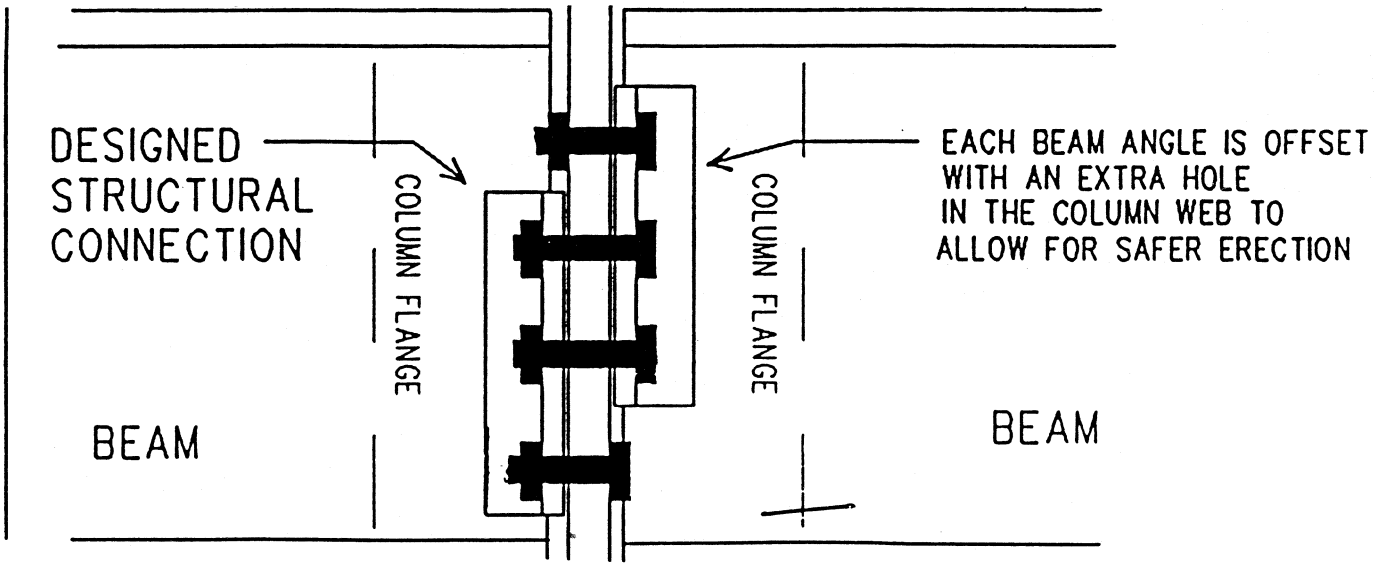

Staggered connections are connection material on a structural member in which all of the bolt holes in the common member web are not shared by the two incoming members in the final connection. The extra hole in the column web allows the erector to maintain at least a one bolt connection at all times while making the double connection.

[FR Doc. 01–979 Filed 1–17–01; 8:45 am]

BILLING CODE 4510–26–P