DEPARTMENT OF TRANSPORTATION

Federal Aviation Administration

14 CFR Part 39

[Docket No. 2001–SW–13–AD; Amendment 39–12408; AD 2001–17–17]

RIN 2120–AA64

Airworthiness Directives; Bell Helicopter Textron, Inc. Model 47B, 47B–3, 47D, 47D–1, 47G, 47G–2, 47G2A, 47G–2A–1, 47G–3, 47G–3B, 47G–3B–1, 47G–3B–2, 47G–3B–2A, 47G–4, 47G–4A, 47G–5, 47G–5A, 47H–1, 47J, 47J–2, 47J–2A, and 47K Helicopters

AGENCY: Federal Aviation Administration, DOT.

ACTION: Final rule.

SUMMARY: This amendment supersedes an existing airworthiness directive (AD) that applies to Bell Helicopter Textron, Inc. (BHTI) Model 47B, 47B–3, 47D, 47D–1, 47G, 47G–2, 47G2A, 47G–2A–1, 47G–3, 47G–3B, 47G–3B–1, 47G–3B–2, 47G–3B–2A, 47G–4, 47G–4A, 47G–5, 47G–5A, 47H–1, 47J, 47J–2, 47J–2A, and 47K helicopters. That AD currently requires either recurring liquid penetrant or eddy current inspections of the main rotor blade grip (grip) threads for a crack. If a crack is detected, that AD requires, before further flight, replacing the cracked grip with an airworthy grip. That AD also establishes a retirement life of 1200 hours time-in-service (TIS) for each grip. This AD contains the same requirements as the existing AD but adds two part numbers (P/N) to the applicability and requires only recurring eddy current inspections of the grip threads. This AD also requires reporting any results of the grip inspections to the FAA Rotorcraft Certification Office. This AD is prompted by the results of an accident investigation, an operator survey conducted by a trade association, various comments concerning the current AD, and a further analysis of field service data. The actions specified by this AD are intended to prevent failure of a grip, loss of a main rotor blade, and subsequent loss of control of the helicopter.

EFFECTIVE DATE: October 3, 2001.

FOR FURTHER INFORMATION CONTACT: Marc Belhumeur, Aviation Safety Engineer, FAA, Rotorcraft Directorate, Rotorcraft Certification Office, Fort Worth, Texas 76193–0170, telephone (817) 222–5177, fax (817) 222–5783.

SUPPLEMENTARY INFORMATION:

Background Information

On May 12, 1987, the FAA issued AD 86–06–08R1 (52 FR 24135, June 29, 1987) that amended AD 86–06–08 (51 FR 11300, April 2, 1986). Those AD's required an initial and repetitive fluorescent dye penetrant inspection of each grip. On August 31, 2000, the FAA issued Emergency AD 2000–18–51 that superseded AD's 86–06–08 and 86–06–08R1. AD 2000–18–51 requires initial and recurring liquid penetrant or eddy current inspections of the grip threads for a crack and, before further flight, replacing any cracked grip with an airworthy grip. That Emergency AD also establishes a retirement life of 1200 hours TIS for each grip. That Emergency AD was published in the **Federal Register** on November 15, 2000 (65 FR 68884) as a final rule, request for comments.

Airworthiness Directive 2000–18–51 was prompted by the results of an investigation of an August 1998 Canadian accident in which a grip failed on a BHTI Model 47G–2 helicopter due to a fatigue crack. An analysis of field service data revealed fatigue cracks in the majority of the grips inspected. The requirements of that AD are intended to prevent failure of a grip, loss of a main rotor blade, and subsequent loss of control of the helicopter.

Since issuing AD 2000–18–51, other cracked grips with less than 1200 hours TIS have been discovered including one grip with a 2-inch crack through the grip. Since then, the FAA has also determined that the liquid penetrant inspection is inadequate for finding smaller cracks in the grip threads. Additionally, two parts produced under a Parts Manufacturer Approval (PMA), P/Ns R74–120–252–11 and R74–120–135–5, were inadvertently omitted from the applicability of AD 2000–18–51. Based on these findings, the earlier accident investigation, a further analysis of field service data, the results of an operator survey conducted by a trade association, and several comments received as a result of the issuance of AD 2000–18–51 as a final rule, request for comments, the FAA issued a Notice of Proposed Rulemaking (NPRM) on March 23, 2001 (66 FR 17105, March 29, 2001) proposing to supersede AD 2000–18–51.

Interested persons have been afforded an opportunity to participate in the making of this amendment. Due consideration has been given to the numerous comments received from the 17 commenters. The comments and the FAA's responses are listed in the following table:

Comment	FAA response
1. A couple of commenters state that the FAA should make available to the public all of the history related to the failed grips, to include the damage history, manufacture date, and hours.	The FAA concurs and will place in the public docket anyinformation that is not proprietary. Anyone wishing this information can obtain it by submitting a request under the Freedom of Information Act to the office provided under the caption **FOR FURTHER INFORMATION CONTACT**.
2. Several commenters state that the grips should be eddy current inspected before initial installation to ensure that they are airworthy.	The FAA does not concur. The FAA has determined that the 300-hour TIS inspection interval is sufficient to ensure safety.
3. Several commenters question the accuracy of the information gathered from the Canadian accident. Many commenters state that the 1998 accident seems to be a result of poor quality control. Several other commenters state that the grip had a questionable history or incomplete records.	The FAA does not concur. The grip in question was within specifications, and records indicate that the helicopter on which the grip was installed was certified, equipped, and maintained in accordance with acceptable procedures.
4. A few commenters state that the FAA has not shown that the affected grips are unsafe after 1200 hours TIS. The commenters state that if the FAA believes a crack will not propagate to failure within 300 hours TIS for either the smaller or larger grip, the grip retirement life should remain at the original 2500 hours for wood-blade grips and 5000 hours for metal-blade grips.	The FAA does not concur. The FAA believes that a crack will not propagate to failure within 300 hours TIS only if the part life is limited to 1200 hours TIS. After 1200 hours TIS, the probability of cracking is too high and recurring inspections may not provide an adequate level of safety. Also, recurring inspections by themselves are not a terminating action.

Comment	FAA response
5. A couple of commenters state that it is not clear who is responsible for reporting results of the grip eddy current inspection to the FAA. The commenters state that the nondestructive inspection (NDI) facility should be responsible for reporting the results.	The FAA does not concur. The owners/operators are responsible for complying with the AD, including reporting the results of the grip eddy current inspections to the FAA. Furthermore, the NDI facility typically only receives minimal aircraft information when parts are sent to them for inspection; therefore, if they were required to report to the FAA they would need to do an inquiry to obtain all the FAA-requested information.
6. Two commenters state that the public should be kept abreast of the on-going BHTI blade grip propagation tests. The commenters also state that if the tests show that a crack will not propagate to failure within 300, 400, 500, or 600 hours TIS, the FAA should change the eddy current inspections to match the BHTI test results.	The FAA partially concurs. Detailed test results are generally proprietary to the manufacturer; however, if the BHTI blade grip propagation tests justify a change to the eddy current inspection intervals, the FAA will adjust the intervals as appropriate.
7. Several commenters state that previous grip failures may have been initiated by sudden stoppage, trailer transporting, rotor over-speed, bad installation procedures, poor maintenance, or other misuse.	The FAA does not concur. Even though these types of abuses could damage the grips, there has been no clear connection between these types of abuses and all the cracked grips.
8. One commenter states that all new blade grips with redesigned root radii may still have cracking problems, and the FAA should issue a Special Airworthiness Information Bulletin (SAIB) to that effect and recommend a voluntary eddy current inspection at 300-hour TIS intervals.	The FAA does not concur; it has no data to support recommending a voluntary eddy current inspection of the redesigned grips.
9. Two commenters state that the FAA should send notification of proposed AD action to each registered owner and not just post a notice in the **Federal Register**.	The FAA does not concur. Only emergency ADs are sent to each registered owner followed by the publication of the final rule in the **Federal Register**. In compliance with the Administrative Procedures Act, notification of proposed action is given by **Federal Register** notice. However, these published notices may be accessed via the Internet.
10. One commenter states that the reinstallation of the steel adapter nuts to the aluminum grip during recurring inspections can create an unsafe condition. Another commenter states that frequent dismantling of these components is harmful.	The FAA does not concur. Both the adapter and the grip should be cleaned and inspected for any burrs, damage, or out-of tolerance threads before any reinstallation. These grips have had recurring inspections since 1985, and the service history suggests that reinstalling the adapter to the grip threads causes no damage if done properly.
11. A few commenters state that an x-ray would be better than an eddy current inspection for finding cracks in the grip threads.	The FAA does not concur. There is no data that suggests that x-rays would increase the likelihood of finding cracks in the grip threads. Compared to eddy current inspections, x-ray inspections are more expensive and do not offer any advantage other than finding internal flaws. Internal flaws are not a concern in grip-thread cracking. The grips cylindrical design also makes the x-ray inspection difficult to perform.
12. Many commenters state that the FAA does not know what caused the problems with the grips, does not have sufficient or reliable data, and has based ADs on faulty equipment and questionable airworthiness records.	The FAA does not concur. The FAA has extensively researched this safety concern and is continuously monitoring in-service problems of the fleet worldwide, taking into account accident data and service difficulty information. The most common reason for cracking has been high stress concentrations in the affected parts. All of the cracked grips had a high stress concentration due to the sharp radii in the thread root.
13. One commenter states that there have been no instances in the U.S. fleet where the old 300-hour zyglo inspection has not maintained an adequate level of safety; therefore, AD 86–06–08 adequately prevents an unsafe condition.	The FAA does not concur. Neither AD 86–06–08 nor AD 86–06–08 R1 addressed the cracking found in grips with less than 1200 hours TIS. Also, the FAA has received reports outlining situations where zyglo inspections have not found known cracks.
14. Two commenters state that a 300-hour TIS inspection interval should be allowed if the last inspection performed on the grips was an eddy current inspection.	The FAA concurs and has made that change in this final rule.
15. Many commenters state that the FAA should change the requirement of the initial inspection from ''the initial inspection is within 10 hours TIS for grips that have 300 hours or more hours TIS'' to ''an initial inspection that is within 10 hours TIS for grips that have not had any previous inspection and have 300 hours or more TIS''.	The FAA concurs and has made that change in this final rule AD.
16. A commenter states that 8 days and revenue of $5,000 a day should be added to the economic impact of the AD.	The FAA does not concur. Although the FAA understands that some operators could have their helicopters grounded for several days, which will result in a loss of revenue, any cost estimate based on assumed ground time and lost revenue would be speculative. The FAA bases its economic impact costs only on known parameters such as labor and parts costs.
17. A commenter states that until everyone agrees on correct procedures, only a one-time inspection should be required.	The FAA does not concur. Data has shown that cracks can develop any time during a grip's service life, and inspecting the grips on a regular basis is needed to prevent a failure.
18. A couple of commenters point out that the Canadian and Australian airworthiness authorities have retained the original retirement lives of the grips and have not amended their current ADs, and according to a recent survey, the majority of the grips in Canada reach their retirement life with no defects.	The FAA partially concurs. Transport Canada and the Civilian Aviation Safety Authority of Australia have changed the initial eddy current inspection from 1200 hours TIS to 600 hours TIS. Neither authority has changed the grip's retirement life; however, they have their own rules and procedures and must make their own safety determinations.

Comment	FAA response
19. One commenter states that the proposed AD should not be issued. The commenter explains his belief that the grip installed on the 1998 Canadian accident fractured because water was lodged in the grip's thread and because pitting was in the thread roots.	The FAA does not concur. The accident report states that water was dislodged during disassembly of the grip from the hub. This does not mean that water was in the threads, nor does the report suggest water in the threads. The report states that there was extensive pitting in the threads. The pits are 0.0008 inch or less and cannot be seen by the naked eye.
20. One commenter states that the 1971 and 1972 accidents that occurred in the U.S. were a result of installing the wrong grips.	The FAA does not concur. The grips involved in those accidents were P/N 47–120–135–1 and –2. Those grips were approved for the BHTI Model 47 G–2 helicopters. The newer approved grips are P/N 47–120–135–3. There are no differences between either of these part-numbered grips at the threads.
21. Several commenters state that the problem with the failed/fractured grips is a manufacturing defect or a quality control problem. Many commenters believe that the manufacturer should inspect each grip before it is sold and that the same requirement should be placed on grips manufactured under PMA.	The FAA does not concur. The FAA has not found any manufacturing defect or quality control problem.
22. One commenter states that an eddy current inspection of the grip, before further flight, should be added to the AD in the event of a sudden stoppage occurrence. Also, as part of the reporting the requirements, add the question ''Has this grip had any prior history involving a sudden stoppage incident or aircraft accident (sudden stoppage as defined in the Bell 47 Maintenance and Overhaul Instructions)?''.	The FAA does not concur. Although this type of abuse could damage grips, there has been no documented connection between sudden stoppage and the cracked grips. Also, all sudden stoppages require removal and disassembly of the main rotor. If blade impact is violent, or if the drag brace belt is sheared and the aft side of the blade butt contacts the aft outboard side of the grip, the complete hub assembly must be replaced.
23. One commenter states that the assumption that dye penetrant inspections are not reliable cannot be accepted. The commenter also states that two labs, one of which is listed in Appendix 2 of the proposal as a recommended facility, state that, for the purpose of the proposed inspection, ''the high sensitivity level of the dye penetrant method would be just as accurate as the eddy current method.'' Additionally, the commenter states that United States has been using a dye penetrant inspection method, probably testing more aircraft with more hours than other countries, inspection. and we have had no accidents''.	The FAA does not concur. The FAA has received reports of confirmed cracks missed by a dye penetrant inspection and found by an eddy current inspection. Although dye penetrant inspections remain a reliable inspection method, the FAA has determined that the eddy current inspection is more appropriate when inspecting for cracks in the blade grip threads.
24. One commenter states that few of the facilities identified in Appendix 2 of the proposal can perform the proposed tests because they do not have the probe required to do so. This situation can cause a hardship on operators who are on tight schedules or live in remote areas. The commenter states that there is no mention in the proposal of any alternate means of compliance when rapid inspection services or parts are not available.	The FAA does not concur. Paragraph (e) of the NPRM and paragraph (g) of this AD address the procedure for obtaining an alternative method of compliance (AMOC). Appendix 2 contains only a partial list of known eddy current inspection facilities. If any of these facilities do not have the equipment or expertise to inspect the threads, then another facility will need to be found or an AMOC that provides an acceptable level of safety must be requested and approved by the Manager, Rotorcraft Certification Office.
25. Several commenters state that the inspection should be performed during the normally scheduled 600 and 1200-hour inspections.	The FAA does not concur. Inspection intervals of 600 and 1200 hours TIS do not provide an adequate level of safety based on the service history of these grips.
26. One commenter states that the manufacturer changed thread standards in the late 1970's. The commenter believes that is when the problem supposedly started and AD 86–06–08 was issued.	The FAA does not concur. The FAA has determined that there was no physical change to the thread standards or design in that timeframe.
27. One commenter asks why we don't state the fact that all 4 grip failures occurred on rotor systems that had suffered sudden stoppage.	The FAA does not concur. There is no data showing that sudden stoppage is connected to grip failures and the commenter did not provide any information showing that all 4 grip failures suffered sudden stoppage or that sudden stoppage contributed to the failures.

After careful review of the available data, including the comments noted above, the FAA has determined that air safety and the public interest require the adoption of the rule with the changes described previously in the disposition of comments 14 and 15. Additionally, the FAA discovered an error in two of the P/Ns given in paragraph (d) of the NPRM; those P/Ns are corrected in this final rule. For better clarity, the FAA has also reorganized the compliance times for performing the eddy current inspections and has added an NDI testing facility to Appendix 2. The FAA has determined that these changes will neither increase the economic burden on any operator nor increase the scope of the AD.

The FAA estimates that 1130 helicopters of U.S. registry will be affected by this AD, that it will take approximately 10 work hours per helicopter to accomplish the disassembly, inspection, and reassembly of the grips from the helicopter, and that the average labor rate is $60 per work hour. Required parts, if a grip needs to be replaced, will cost approximately $4,000 per grip (there are two grips on each helicopter). Based on these figures, the total cost impact of the AD on U.S. operators is estimated to be $9,718,000, assuming one inspection per helicopter and replacement of both grips on each helicopter.

The regulations adopted herein will not have a substantial direct effect on the States, on the relationship between the national Government and the States, or on the distribution of power and responsibilities among the various levels of government. Therefore, it is determined that this final rule does not have federalism implications under Executive Order 13132.

For the reasons discussed above, I certify that this action (1) is not a ''significant regulatory action'' under Executive Order 12866; (2) is not a ''significant rule'' under DOT Regulatory Policies and Procedures (44

FR 11034, February 26, 1979); and (3) will not have a significant economic impact, positive or negative, on a substantial number of small entities under the criteria of the Regulatory Flexibility Act. A final evaluation has been prepared for this action and it is contained in the Rules Docket. A copy of it may be obtained from the Rules Docket at the FAA, Office of the Regional Counsel, Southwest Region, 2601 Meacham Blvd., Room 663, Fort Worth, Texas.

List of Subjects in 14 CFR Part 39

Air transportation, Aircraft, Aviation safety, Safety.

Adoption of the Amendment

Accordingly, pursuant to the authority delegated to me by the Administrator, the Federal Aviation Administration amends part 39 of the Federal Aviation Regulations (14 CFR part 39) as follows:

PART 39—AIRWORTHINESS DIRECTIVES

1. The authority citation for part 39 continues to read as follows:

Authority: 49 U.S.C. 106(g), 40113, 44701.

§ 39.13 [Amended]

2. Section 39.13 is amended by removing Amendment 39–11983 (65 FR 68884, November 15, 2000), and by adding a new airworthiness directive (AD), Amendment 39–12408, to read as follows:

2001–17–17 Bell Helicopter Textron, Inc.: Amendment 39–12408. Docket No. 2001–SW–13–AD. Supersedes AD 2000–18–51, Amendment 39–11983, Docket No. 2000–SW–35–AD.

Applicability: Model 47B, 47B–3, 47D, 47D–1, 47G, 47G–2, 47G2A, 47G–2A–1, 47G–3, 47G–3B, 47G–3B–1, 47G–3B–2, 47G–3B–2A, 47G–4, 47G–4A, 47G–5, 47G–5A, 47H–1, 47J, 47J–2, 47J–2A, and 47K helicopters, with main rotor blade grips, part number (P/N) 47–120–135–2, 47–120–135–3, 47–120–135–5, 47–120–252–1, 47–120–252–7, 47–120–252–11, 74–120–252–11, 74–120–135–5, R47–120–252–11, and R47–120–135–5, installed, certificated in any category.

Note 1: This AD applies to each helicopter identified in the preceding applicability provision, regardless of whether it has been otherwise modified, altered, or repaired in the area subject to the requirements of this AD. For helicopters that have been modified, altered, or repaired so that the performance of the requirements of this AD is affected, the owner/operator must request approval for an alternative method of compliance in accordance with paragraph (g) of this AD. The request should include an assessment of the effect of the modification, alteration, or repair on the unsafe condition addressed by this AD; and if the unsafe condition has not been eliminated, the request should include specific proposed actions to address it.

Compliance: Required as indicated, unless accomplished previously.

To prevent failure of a main rotor blade grip (grip), separation of a main rotor blade, and subsequent loss of control of the helicopter, accomplish the following:

(a) Conduct an eddy current inspection of the threads of both grips for a crack in accordance with Appendix 1 of this AD or an equivalent FAA-approved procedure containing the requirements of the procedure in Appendix 1:

(1) Within 300 hours time-in-service (TIS) since initial installation on any helicopter for a grip with less than 300 total hours TIS;

(2) Within 10 hours TIS for a grip with 300 or more total hours TIS that has not had any previous dye penetrant or eddy current inspection;

(3) Within 200 hours TIS since the last dye penetrant inspection; OR

(4) Within 300 hours TIS since the last eddy current inspection, whichever occurs first.

(b) Thereafter, conduct the eddy current inspection in accordance with Appendix 1 of this AD or an equivalent FAA-approved procedure containing the requirements of the procedure in Appendix 1 at intervals not to exceed 300 hours TIS.

(c) Report the results of each inspection to the FAA Rotorcraft Certification Office within 7 calendar days. Reporting requirements have been approved by the Office of Management and Budget and assigned OMB control number 2120–0056.

Note 2: See Appendix 2 of this AD for a list of known eddy current inspection facilities.

(d) If a crack is detected, before further flight, replace any cracked grip with an airworthy grip.

(e) On or before 1200 hours TIS, replace each grip with an airworthy grip.

(f) This AD establishes a retirement life of 1200 hours TIS for the grips, P/N 47–120–135–2, 47–120–135–3, 47–120–135–5, 47–120–252–1, 47–120–252–7, 47–120–252–11, 74–120–252–11, 74–120–135–5, R47–120–252–11, and R47–120–135–5.

(g) An alternative method of compliance or adjustment of the compliance time that provides an acceptable level of safety may be used if approved by the Manager, Rotorcraft Certification Office, FAA. Operators shall submit their requests through an FAA Principal Maintenance Inspector, who may concur or comment and then send it to the Manager, Rotorcraft Certification Office.

Note 3: Information concerning the existence of approved alternative methods of compliance with this AD, if any, may be obtained from the Rotorcraft Certification Office.

(h) Special flight permits may be issued in accordance with 14 CFR 21.197 and 21.199 to operate the helicopter to a location where the requirements of this AD can be accomplished.

(i) This amendment becomes effective on October 3, 2001.

Appendix 1

Nondestructive Inspection Procedure

Task: Eddy Current (ET) Inspection of Mast Threads for Cracks

1.0 Area of Inspection

1.1 The inboard inside diameter machined threads (reference figure 1).

2.0 Equipment

2.1 Zetec Miz-20/22, Phasec 2200 or equivalent piece of equipment.

2.2 Match molded ET probe SPC–193 (100kHz) or equivalent. (See Figure 3.)

2.3 Reference standard EC–010–021, or equivalent. (See Figures 4 and 5.)

2.4 Light oil.

3.0 Personnel Requirements

3.1 Personnel performing the ET inspection must be minimally qualified to a Level II in ET inspection, certified in accordance with an industry accepted standard (such as ATA–105, NAS–410, or MIL–STD–410) or an FAA accepted company procedure.

4.0 Standardization

4.1 Connect probe to flaw detector and turn power on.

4.2 Adjust the Phasec 2000 as shown in table 1. Adjust all other equipment as necessary.

4.3 Adjust the V:H gain ratio to 1.5:1–2:1.

4.4 Monitor the crack response when moving the probe in one direction only across each EDM notch of the standard. Adjust the coarse gain for a crack response of 2–3 units from the smallest (0.04″) notch. Record the number units of displacement and noise level for each of the EDM notches.

5.0 Pre Inspection

5.1 The part shall be clean and free of loose debris.

5.2 A thin coating of clean oil may be applied to the teeth to help the ET probe slide easily.

6.0 Inspection

6.1 Place the probe into the threaded area and slide it in the same direction as was done on the standard while monitoring the screen for root cracks. Moving the probe in the same direction produces a repeatable display that allows for more accurate flaw size determination. Scan the probe along each individual thread until all the threads are inspected. (See Figures 2 and 3.)

7.0 Evaluation

7.1 Repeat standardization and rescan any areas where there is a vertical crack-like deflection.

7.2 If indication persists, mark the location on the part. Record the number units of displacement, phase orientation, and noise level.

8.0 Accept/Reject Criteria

8.1 All repeatable crack-like indications above the noise level detected shall be cause for rejection.

Zetec M12 - 20/22, Phasec 2200 Settings

Dialogue: English	Alarm Stretch: 1S	Probe: Standard
Printer: HP PCL	Alarm Shape: Off	Drive: +10dB 6.3V
◀Bright Bal▶ Low Split	Apply to: Trace 1	Analogue 1:Out Off
Graticule: Rect. A	◀Alarm action▶ Run Silent	Analogue 2: Out Off

Ser'l Conf. Alarm I/0 Time Batt.

Hi-pass: DC	CH1 Freq: 100KHz	◀ Mode: Diff 1Ch
Lo-pass: 20 Hz	CH1 PHASE: 193.0°	Display: XY
Inp. Gain: +20dB	CH1 GAIN: 46.0Db	View: Ch1
Optimize: ◀ + ▶	CH1 X:Y: X -3.0dB	Persist: Permn't

Table 1, Appendix 1

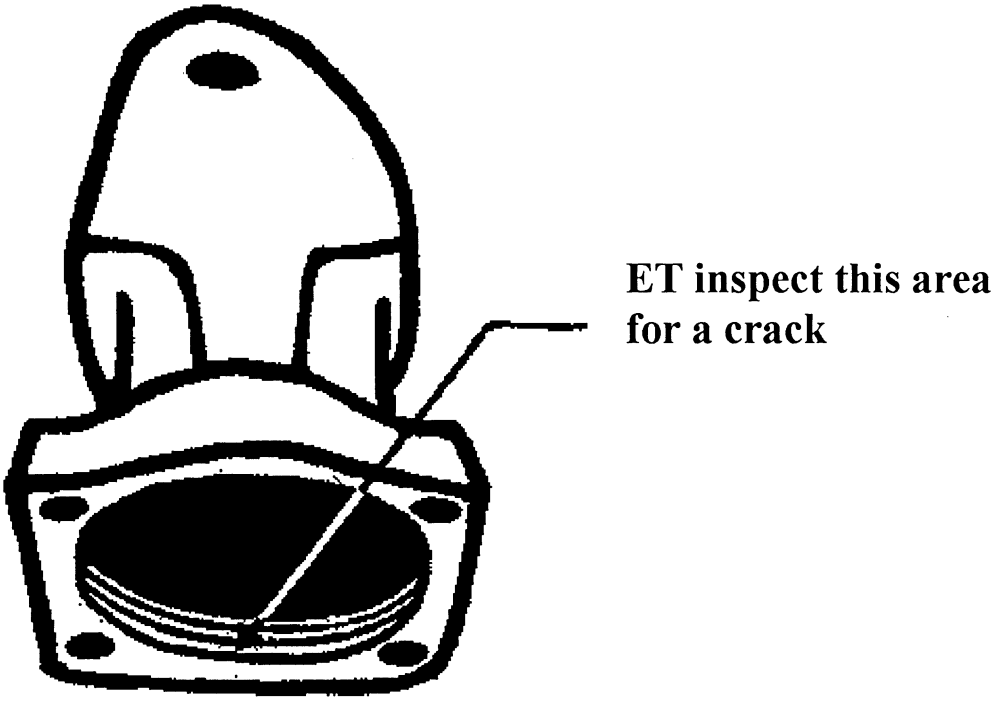

Figure 1, Appendix 1

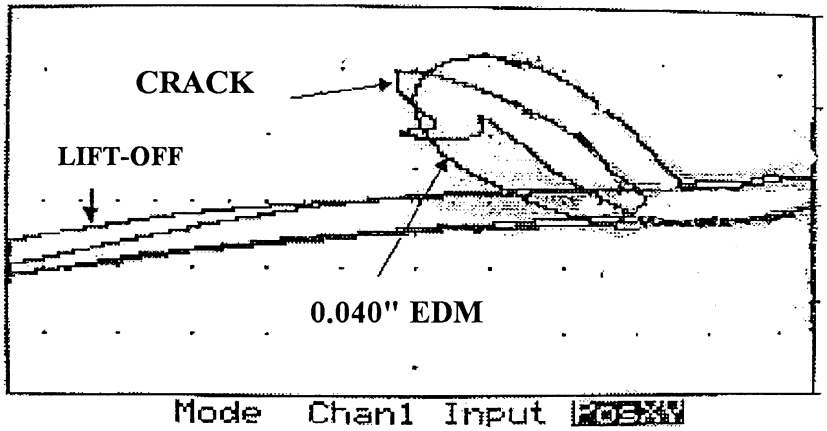

A typical flaw indication appears on the eddy current monitor as shown above.

Figure 2, Appendix 1

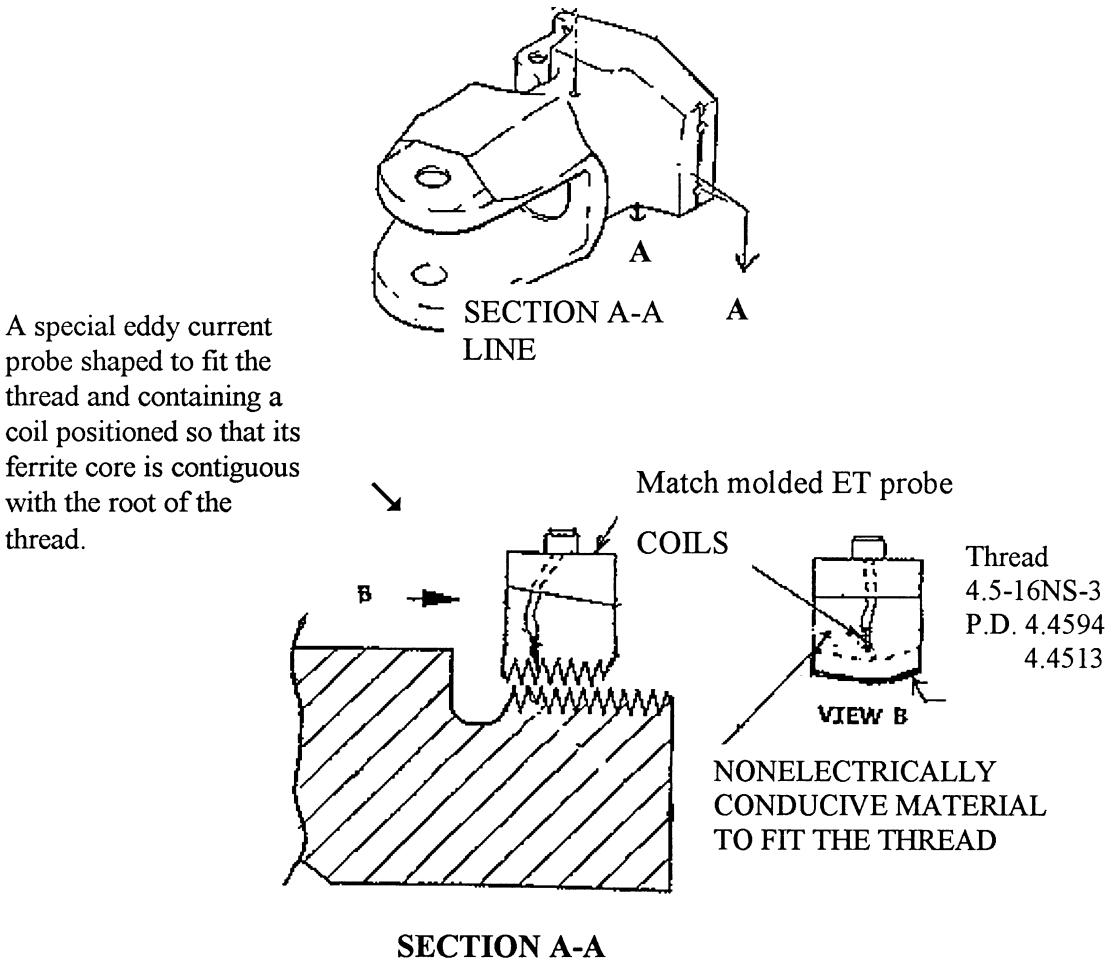

Figure 3, Appendix 1

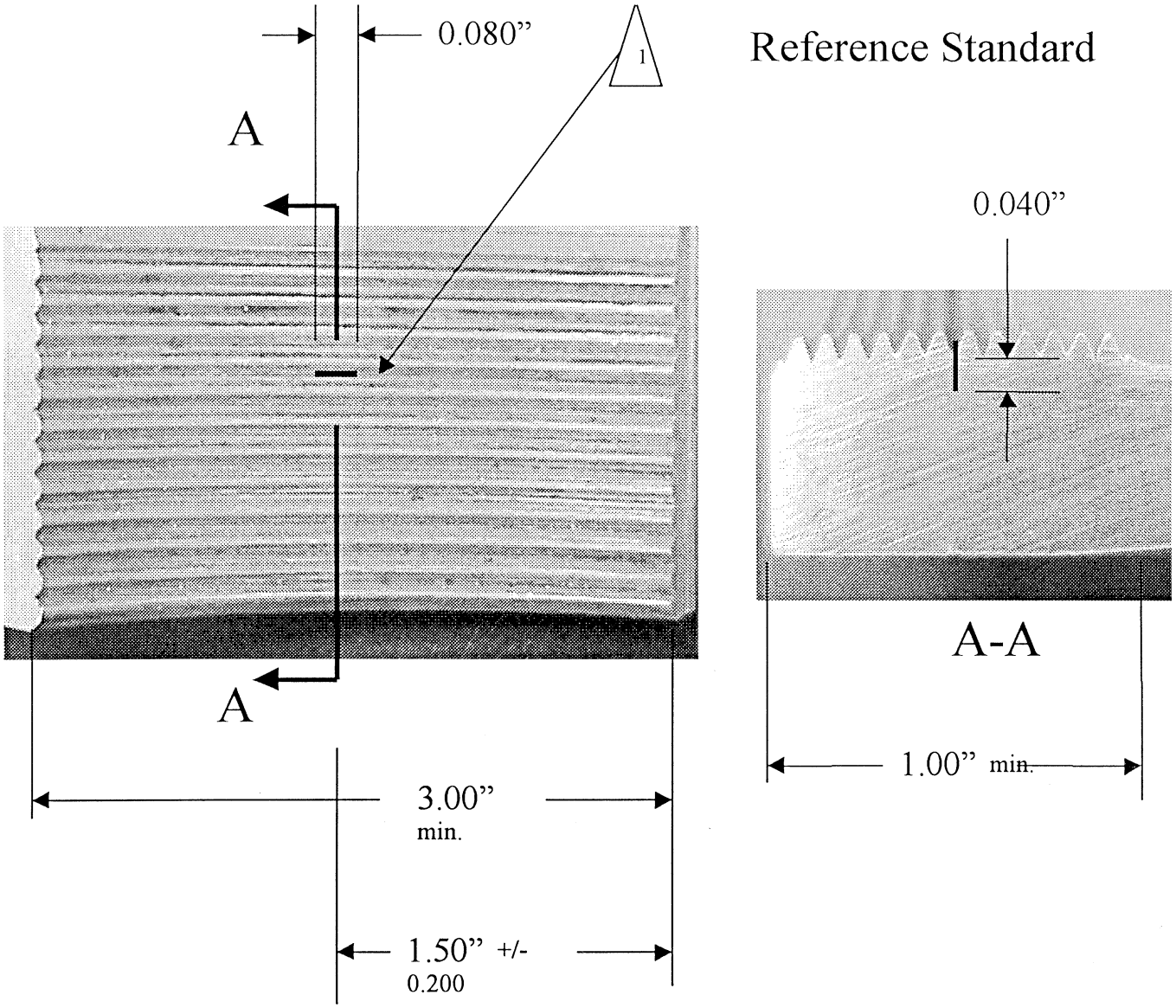

1 EDM 1 place only in thread root.
Notch width shall be 0.004 max.
All other dimensions to be +/- 0.004 from indicated.

Figure 4, Appendix 1

Reference Standard

MACHINING NOTES:

1. Standard may be machined from aluminum tube stock.
2. The standard shall contain a minimum of four teeth per the tooth dimensions specified.
3. The EDM notch shall be placed in the center most tooth root as measured across the width of the standards. There shall be no less than two teeth and one root on either side of the EDM notch.

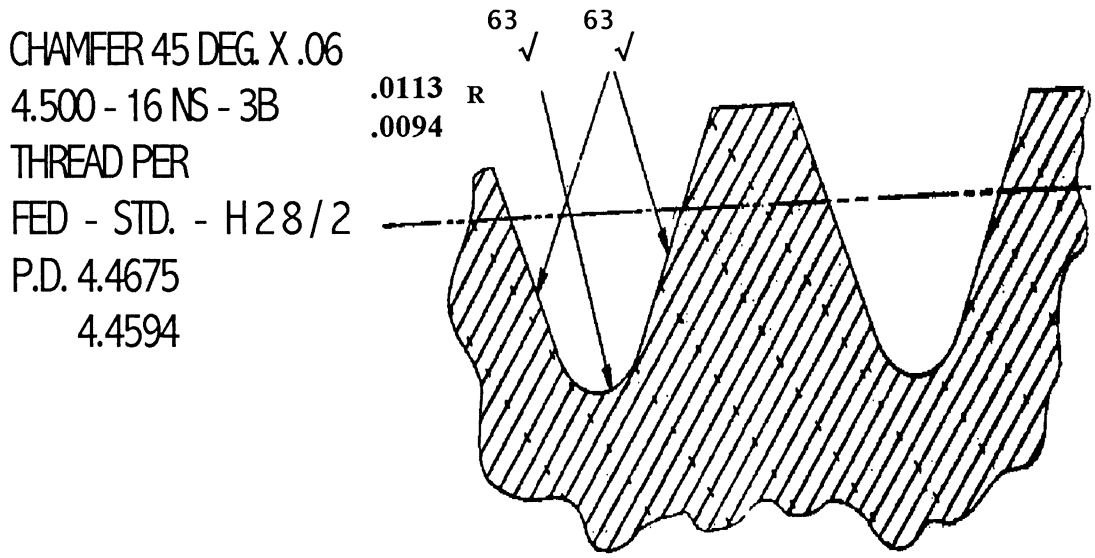

Figure 5, Appendix 1

BILLING CODE 4910–13–C

Appendix 2

Partial List of Nondestructive Inspection Testing Facilities Identified by Operators and FAA

Met Chem Testing Laboratories Inc.
369 W. Gregson Ave. (3085 S.)
Salt Lake City, Utah 84115–3440
Phone: (801) 487–0801
FAX: (801) 466–8790
www.metchemtesting.com

Galactic NDT Services 10728 D. South Pipeline RD
Hurst, Texas 76053
Phone: (800) 458–6387

Global Testing Technologies
1173 North Service Rd. Unit D3
Oakville Toronto Canada
Phone: (905) 847–9300
FAX: (905) 847–9330

Paragon Services, Inc.
1015 S. West St.
Wichita, KS 67213
Phone: (316) 945–5285
FAX: (316) 945–0629

NOE Services
8775 E. Orchard Rd. #809
Englewood, CO
Phone: (303) 741–0518
FAX: (303) 741–0519

Applied Technical Services, Inc.
1190 Atlanta Industrial Drive
Marietta, GA 30066
Phone: (770) 423–1400
FAX: (770) 514–3299

Rotorcraft Support
Van Nuys CA 91406
Phone: (818) 997–7667
FAX: (818) 997–1513

Palm Beach Aircraft Propeller, Inc
Palm Beach County Park Airport
2633 Lantana Road
Suite 23, Bldg 1501
Lantana, FL 33462
Phone: (800) 965–7767
FAX: (561) 965–7933
Email: *info@pbapi.com*
Website: *www.pbapi.com*
Contact: Will Burbage

Other FAA approved repair facilities may be used.

Appendix 3

AD Compliance Inspection Report (Sample Format)

Bell Model 47 Main Rotor Blade Grip

Provide the following information and mail or fax it to:

Manager, Rotorcraft Certification Office, Federal Aviation Administration, Fort Worth, Texas, 76193–0170, USA, Fax: 817–222–5783.

Aircraft Registration No:
Helicopter Model:
Helicopter Serial Number:
Owner and Operator of the Helicopter:

	Grip #1	Grip #2
Part Number:		
Serial Number:		

Hours TIS on the Part at Inspection:

Crack Found (Y/N)
If yes, describe below.

Description of Findings

Who performed the inspections?

If a crack was found, describe the crack size, location, and orientation (provide a sketch or pictures with the grip part and serial number).

Provide any other comments.

Issued in Fort Worth, Texas on August 15, 2001.

David A. Downey,

Manager, Rotorcraft Directorate, Aircraft Certification Service.

[FR Doc. 01–21749 Filed 8–28–01; 8:45 am]

BILLING CODE 4910–13–U

DEPARTMENT OF TRANSPORTATION

Federal Aviation Administration

14 CFR Part 39

[Docket No. 2001–NM–145–AD; Amendment 39–12422; AD 98–24–02 R1]

RIN 2120–AA64

Airworthiness Directives; McDonnell Douglas Model MD–11 Series Airplanes

AGENCY: Federal Aviation Administration, DOT.

ACTION: Final rule.

SUMMARY: This amendment revises an existing airworthiness directive (AD), applicable to certain McDonnell Douglas Model MD–11 series airplanes, that requires a one-time inspection to identify the part numbers of two dimmer controls for the overhead instrument panel light and circuit breaker lightplate located in the flight compartment. For airplanes on which a dimmer control having an incorrect part number is installed, that AD also requires replacing the dimmer control with a new part; modifying and reinstalling the existing dimmer control; or reinstalling a dimmer control following modification of the part by the part manufacturer. That AD was prompted by reports of smoke emitting from the overhead panels in the cockpit area. The actions specified by that AD are intended to prevent an electrical failure in the overhead dimmer control due to overheating of a printed circuit board capacitor in the dimmer control, which could result in rupture of the capacitor and smoke in the flight compartment. This amendment revises the term ''serial numbers'' in the applicability statement to ''fuselage numbers.''

DATES: Effective October 3, 2001.

The incorporation by reference of certain publications listed in the regulations was approved previously by the Director of the **Federal Register** as of November 30, 1998 (63 FR 63402, November 13, 1998).

ADDRESSES: The service information referenced in this AD may be obtained from Boeing Commercial Aircraft Group, Long Beach Division, 3855 Lakewood Boulevard, Long Beach, California 90846, Attention: Data and Service Management, Dept. C1-L5A (D800–0024). This information may be examined at the Federal Aviation Administration (FAA), Transport Airplane Directorate, Rules Docket, 1601 Lind Avenue, SW., Renton, Washington; or at the FAA, Los Angeles Aircraft Certification Office, 3960 Paramount Boulevard, Lakewood, California; or at the Office of the Federal Register, 800 North Capitol Street, NW., suite 700, Washington, DC.

FOR FURTHER INFORMATION CONTACT: Brett Portwood, Aerospace Engineer, Systems and Equipment Branch, ANM–130L, FAA, Los Angeles Aircraft Certification Office, 3960 Paramount Boulevard, Lakewood, California 90712–4137; telephone (562) 627–5350; fax (562) 627–5210.

SUPPLEMENTARY INFORMATION: A proposal to amend part 39 of the Federal Aviation Regulations (14 CFR part 39) by revising AD 98–24–02, amendment 39–10889 (63 FR 63402, November 13, 1998), which is applicable to certain McDonnell Douglas Model MD–11 series airplanes, was published in the **Federal Register** on June 11, 2001 (66 FR 31194). The action proposed to continue to require a one-time inspection to identify the part numbers of two dimmer controls for the overhead instrument panel light and circuit breaker lightplate located in the flight compartment. For airplanes on which a dimmer control having an incorrect part number is installed, the action also proposed to continue to require replacing the dimmer control with a new part; modifying and reinstalling the existing dimmer control; or reinstalling a dimmer control following modification of the part by the part manufacturer. The action also proposed to revise the term ''serial numbers'' in the applicability statement to ''fuselage numbers.''

Comments

Interested persons have been afforded an opportunity to participate in the making of this amendment. Due consideration has been given to the single comment received.