AUTHENTICATED
U.S. GOVERNMENT
INFORMATION
GPO

Federal Register

8–29–01 Wednesday
Vol. 66 No. 168 Aug. 29, 2001
Pages 45563–45748

The **FEDERAL REGISTER** is published daily, Monday through Friday, except official holidays, by the Office of the Federal Register, National Archives and Records Administration, Washington, DC 20408, under the Federal Register Act (44 U.S.C. Ch. 15) and the regulations of the Administrative Committee of the Federal Register (1 CFR Ch. I). The Superintendent of Documents, U.S. Government Printing Office, Washington, DC 20402 is the exclusive distributor of the official edition.

The **Federal Register** provides a uniform system for making available to the public regulations and legal notices issued by Federal agencies. These include Presidential proclamations and Executive Orders, Federal agency documents having general applicability and legal effect, documents required to be published by act of Congress, and other Federal agency documents of public interest.

Documents are on file for public inspection in the Office of the Federal Register the day before they are published, unless the issuing agency requests earlier filing. For a list of documents currently on file for public inspection, see http://www.nara.gov/fedreg.

The seal of the National Archives and Records Administration authenticates the Federal Register as the official serial publication established under the Federal Register Act. Under 44 U.S.C. 1507, the contents of the **Federal Register** shall be judicially noticed.

The **Federal Register** is published in paper and on 24x microfiche. It is also available online at no charge as one of the databases on GPO Access, a service of the U.S. Government Printing Office.

The online edition of the **Federal Register** is issued under the authority of the Administrative Committee of the Federal Register as the official legal equivalent of the paper and microfiche editions (44 U.S.C. 4101 and 1 CFR 5.10). It is updated by 6 a.m. each day the **Federal Register** is published and it includes both text and graphics from Volume 59, Number 1 (January 2, 1994) forward.

GPO Access users can choose to retrieve online **Federal Register** documents as TEXT (ASCII text, graphics omitted), PDF (Adobe Portable Document Format, including full text and all graphics), or SUMMARY (abbreviated text) files. Users should carefully check retrieved material to ensure that documents were properly downloaded.

On the World Wide Web, connect to the **Federal Register** at http://www.access.gpo.gov/nara. Those without World Wide Web access can also connect with a local WAIS client, by Telnet to swais.access.gpo.gov, or by dialing (202) 512-1661 with a computer and modem. When using Telnet or modem, type swais, then log in as guest with no password.

For more information about GPO Access, contact the GPO Access User Support Team by E-mail at gpoaccess@gpo.gov; by fax at (202) 512–1262; or call (202) 512–1530 or 1–888–293–6498 (toll free) between 7 a.m. and 5 p.m. Eastern time, Monday–Friday, except Federal holidays.

The annual subscription price for the **Federal Register** paper edition is $638, or $697 for a combined **Federal Register,** Federal Register Index and List of CFR Sections Affected (LSA) subscription; the microfiche edition of the **Federal Register** including the Federal Register Index and LSA is $253. Six month subscriptions are available for one-half the annual rate. The charge for individual copies in paper form is $9.00 for each issue, or $9.00 for each group of pages as actually bound; or $2.00 for each issue in microfiche form. All prices include regular domestic postage and handling. International customers please add 25% for foreign handling. Remit check or money order, made payable to the Superintendent of Documents, or charge to your GPO Deposit Account, VISA, MasterCard or Discover. Mail to: New Orders, Superintendent of Documents, P.O. Box 371954, Pittsburgh, PA 15250–7954.

There are no restrictions on the republication of material appearing in the **Federal Register.**

How To Cite This Publication: Use the volume number and the page number. Example: 66 FR 12345.

SUBSCRIPTIONS AND COPIES

PUBLIC	
Subscriptions:	
Paper or fiche	**202–512–1800**
Assistance with public subscriptions	**512–1806**
General online information	**202–512–1530; 1–888–293–6498**
Single copies/back copies:	
Paper or fiche	**512–1800**
Assistance with public single copies	**512–1803**
FEDERAL AGENCIES	
Subscriptions:	
Paper or fiche	**523–5243**
Assistance with Federal agency subscriptions	**523–5243**

Printed on recycled paper.

Contents

Federal Register

Vol. 66, No. 168

Wednesday, August 29, 2001

Agriculture Department
See Animal and Plant Health Inspection Service

Alcohol, Tobacco and Firearms Bureau
RULES
Alcohol, tobacco, and other excise taxes:
Tobacco products and cigarette papers and tubes—
Importation restrictions, markings, repackaging, and forfeited tobacco products destruction, 45613–45619

Animal and Plant Health Inspection Service
PROPOSED RULES
Plant-related quarantine, foreign:
Phytosanitary certificates for imported fruits and vegetables, 45637–45648

Arts and Humanities, National Foundation
See National Foundation on the Arts and the Humanities

Centers for Disease Control and Prevention
NOTICES
Grant and cooperative agreement awards:
DuPage County (IL) Health Department; correction to Illinois Health Department, 45682

Coast Guard
RULES
Ports and waterways safety:
Gulf of Alaska, Narrow Cape, Kodiak Island, AK; safety zone
Correction, 45619

Commerce Department
See International Trade Administration
See National Oceanic and Atmospheric Administration

Commodity Futures Trading Commission
RULES
Commodity Futures Modernization Act; implementation:
Derivatives clearing organizations; regulatory framework, 45604–45613

Education Department
NOTICES
Agency information collection activities:
Submission for OMB review; comment request, 45668–45669
Privacy Act:
Systems of records, 45669

Employment and Training Administration
NOTICES
Adjustment assistance:
A-1 Manufacturing, Inc., 45694
Double Springs Corp., 45697–45698
Fernbrook & Co., 45694
Garan Manufacturing Corp., 45698
LTV Steel Mining Co., 45695
Lucia, Inc., 45695
OBG Manufacturing Co., 45695–45696
Pottstown Precision Casting, Inc., 45698
Sappi Fine Paper Co., 45698–45699
Saunders Brothers Rumford, 45696
Spartan International Rosemont Plant, 45696
Wheeling-Pittsburgh Steel Corp., 45697
ZapatA Technologies, Inc., 45699
Adjustment assistance and NAFTA transitional adjustment assistance:
Tower Automotive, 45696–45697
NAFTA transitional adjustment assistance:
Tower Automotive, 45697

Energy Department
See Energy Efficiency and Renewable Energy Office
See Federal Energy Regulatory Commission
NOTICES
Meetings:
Environmental Management Site-Specific Advisory Board—
Paducah Gaseous Diffusion Plant, KY, 45669

Energy Efficiency and Renewable Energy Office
NOTICES
Meetings:
Federal Energy Management Advisory Committee, 45669–45670

Environmental Protection Agency
RULES
Air quality implementation plans; approval and promulgation; various States:
Tennessee, 45632–45634
Superfund program:
National oil and hazardous substances contingency plan—
National priorities list update, 45634
PROPOSED RULES
Air quality implementation plans; approval and promulgation; various States:
Tennessee, 45661
Pesticide programs:
Pesticide labeling and other regulatory revisions; notification to Agriculture Secretary, 45661–45662
NOTICES
Grants, State and local assistance:
Grantee performance evaluation reports—
Various States, 45675
Meetings:
Science Advisory Board, 45676–45677
Pesticide programs:
Risk assessments; availability, etc.—
Lindane, 45677–45679
Radiation protection programs:
Savannah River Site, SC—
Transuranic radioactive waste proposed for disposal at Waste Isolation Pilot Plant; waste characterization program documents availability, 45679–45680

Executive Office of the President
See Management and Budget Office
See Presidential Documents
See Trade Representative, Office of United States

Federal Aviation Administration
RULES
Airworthiness directives:
Agusta S.p.A., 45565–45568
Airbus, 45581–45583
Bell, 45584–45594
Boeing, 45572–45575, 45579–45581
Bombardier, 45570–45572
Israel Aircraft Industries, Ltd., 45577–45579
McDonnell Douglas, 45568–45570, 45594–45596
Raytheon, 45575–45577
Class D and Class E airspace, 45596–45597
Class E airspace, 45597–45601
Jet routes and VOR Federal airways, 45601–45603
Restricted areas, 45604
VOR Federal airways, 45603
PROPOSED RULES
Airworthiness directives:
Bombardier, 45653–45655
Eurocopter France, 45651–45653
McDonnell Douglas, 45655–45659
SOCATA-Groupe Aerospatiale, 45648–45651
Class E airspace, 45659–45661
NOTICES
Environmental statements; availability, etc.:
South Suburban Airport, Chicago, IL; FAA site approval and Illinois land acquisition; hearing and comment period, 45725–45726

Federal Energy Regulatory Commission
NOTICES
Hydroelectric applications, 45674–45675
Applications, hearings, determinations, etc.:
Alliance Energy Services Partnership, 45670
Beacon Generating, LLC, 45671
Caithness Energy Marketing, LLC, 45671
Cogentrix Lawrence County, LLC, 45671–45672
Huntington Beach Development, L.L.C, 45672
Metro Energy, L.L.C, 45672–45673
Midwest Generation, LLC, 45673
Natural Fuel Gas Supply Corp., 45673
PPL Brunner Island, LLC, 45673
PSEG Lawrenceburg Energy Co., LLC, 45674

Federal Reserve System
NOTICES
Meetings; Sunshine Act, 45680

Financial Management Service
See Fiscal Service

Fiscal Service
NOTICES
Surety companies acceptable on Federal bonds:
Star Insurance Co.; termination, 45727–45728

Fish and Wildlife Service
RULES
Migratory bird hunting:
Seasons, limits, and shooting hours; establishment, etc., 45729–45747
PROPOSED RULES
Endangered and threatened species:
Florida manatee; additional protection areas Hearings, 45662–45663
NOTICES
Endangered and threatened species permit applications, 45689–45690
Environmental statements; notice of intent:
Gila and Maricopa Counties, AZ; Roosevelt Habitat Conservation Plan, 45690–45691
Marine mammal permit applications, 45691–45692

Food and Drug Administration
NOTICES
Reports and guidance documents; availability, etc.:
Premarket notifications [510(k)s] for in vitro HIV drug resistance genotype assays, 45682–45683
Revised Preventive Measures to Reduce the Possible Risk of Transmission of Creutzfeldt-Jakob Disease (CJD) and Variant Creutzfeldt-Jakob Disease (vCJD) by Blood and Blood Products, 45683–45684

General Services Administration
NOTICES
Acquisition regulations:
Application for Leave (SF 71); form cancellation, 45680–45681
Agency information collection activities:
Submission for OMB review; comment request, 45681

Health and Human Services Department
See Centers for Disease Control and Prevention
See Food and Drug Administration
See National Institutes of Health
See Substance Abuse and Mental Health Services Administration
NOTICES
Agency information collection activities:
Submission for OMB review; comment request, 45681–45682
Rural Communities Initiative; comment request, 45682

Immigration and Naturalization Service
NOTICES
Immigration:
Legal Immigration Family Equity Act and LIFE Act Amendments; legalization and family unity provisions; filing address for application submissions corrected, 45694

Interior Department
See Fish and Wildlife Service

International Trade Administration
NOTICES
Antidumping:
Top-of-the-stove stainless steel cooking ware from—
Korea, 45664–45666
Welded carbon steel pipes and tubes from—
Thailand, 45666–45667

International Trade Commission
NOTICES
Import investigations:
Blast furnace coke from—
China and Japan, 45692
Steel wire rod from—
Canada and Mexico, 45692

Judicial Conference of the United States
NOTICES
Meetings:
Judicial Conference Advisory Committee on—
Bankruptcy, Civil Procedure, Criminal Procedure, and Evidence Rules, 45693–45694

Bankruptcy Procedure Rules, 45693
Civil Procedure Rules, 45693
Criminal Procedure Rules, 45693
Practice and Procedure Rules, 45693

Justice Department
See Immigration and Naturalization Service

Labor Department
See Employment and Training Administration

Management and Budget Office
NOTICES
Balanced Budget and Emergency Deficit Control Reaffirmation Act (Gramm-Rudman-Hollings):
Sequestration update report; transmittal to President and Congress, 45707

National Archives and Records Administration
NOTICES
Electronic copies previously covered by General Records Schedule 20; records schedules availability and comment request, 45699–45700

National Foundation on the Arts and the Humanities
NOTICES
Agency information collection activities:
Proposed collection; comment request, 45700–45701

National Institutes of Health
NOTICES
Environmental statements; notice of intent:
Montgomery County, Bethesda, MD; NIH Main Campus, 45684–45685
Inventions, Government-owned; availability for licensing, 45685
Meetings:
National Cancer Institute, 45685–45686
National Center for Complementary and Alternative Medicine, 45686
National Institute of Allergy and Infectious Diseases, 45686–45687
National Institute of Environmental Health Sciences, 45688
National Institute on Aging, 45687
National Institute on Drug Abuse, 45687
Warren Grant Magnuson Clinical Center Board of Governors, 45688
Patent licenses; non-exclusive, exclusive, or partially exclusive:
Attenuon LLC, 45688–45689

National Oceanic and Atmospheric Administration
RULES
Fishery conservation and management:
Alaska; fisheries of Exclusive Economic Zone—
Rock sole/flathead sole/other flatfish, 45635–45636
West Coast States and Western Pacific fisheries—
West Coast salmon, 45634–45635
NOTICES
Grants and cooperative agreements; availability, etc.:
Mid-Atlantic Fishery Management Council; research proposals, 45668

National Science Foundation
NOTICES
Antarctic Conservation Act of 1978; permit applications, etc., 45701–45703

Northeast Dairy Compact Commission
NOTICES
Meetings, 45703

Nuclear Regulatory Commission
NOTICES
Agency information collection activities:
Submission for OMB review; comment request, 45703–45704
Environmental statements; availability, etc.:
Consolidated Edison Co. of New York, Inc., 45704
Virginia Electric & Power Co., 45705
Yankee Atomic Electric Co., 45705–45707

Office of Management and Budget
See Management and Budget Office

Office of United States Trade Representative
See Trade Representative, Office of United States

Presidential Documents
PROCLAMATIONS
Special observances:
Women's Equality Day (Proc. 7458), 45563–45564

Public Debt Bureau
See Fiscal Service

Public Health Service
See Centers for Disease Control and Prevention
See Food and Drug Administration
See National Institutes of Health
See Substance Abuse and Mental Health Services Administration

Securities and Exchange Commission
NOTICES
Agency information collection activities:
Submission for OMB review; comment request, 45707
Investment Company Act of 1940:
Exemption applications—
Commonfund Institutional Funds et al., 45707–45709
Master Investment Portfolio et al., 45709–45712
Self-regulatory organizations; proposed rule changes:
American Stock Exchange LLC, 45712–45713
Chicago Board Options Exchange, Inc., 45713
International Securities Exchange LLC, 45713–45715
National Securities Clearing Corp., 45715–45716
Philadelphia Stock Exchange, Inc., 45716–45723

State Department
NOTICES
Senior Executive Service:
Performance Review Board; membership, 45723

Substance Abuse and Mental Health Services Administration
NOTICES
Meetings:
Substance Abuse Treatment Center National Advisory Council, 45689

Surface Transportation Board
NOTICES
Railroad operation, acquisition, construction, etc.:
Burlington Northern & Santa Fe Railway Co., 45726–45727
Railroad services abandonment:
Maryland Mass Transit Administration, 45727

Trade Representative, Office of United States
NOTICES
Free Trade Area of Americas:
Electronic commerce; U.S. private sector expert identification request, 45723–45724
World Trade Organization:
Canada and U.S.; consultations regarding preliminary countervailing duty and critical circumstances determinations concerning softwood lumber from Canada, 45724–45725

Transportation Department
See Coast Guard
See Federal Aviation Administration
See Surface Transportation Board

Treasury Department
See Alcohol, Tobacco and Firearms Bureau
See Fiscal Service

Veterans Affairs Department
RULES
Adjudication; pensions, compensation, dependency, etc.:
Application for benefits; duty to assist, 45620–45632
NOTICES
Meetings:
Natural Research Advisory Council, 45728
President's Task Force to Improve Health Care Delivery for Our Nation's Veterans, 45728
Special Medical Advisory Group, 45728

Separate Parts In This Issue

Part II
Department of the Interior, Fish and Wildlife Service, 45729–45747

Reader Aids
Consult the Reader Aids section at the end of this issue for phone numbers, online resources, finding aids, reminders, and notice of recently enacted public laws.

CFR PARTS AFFECTED IN THIS ISSUE

A cumulative list of the parts affected this month can be found in the Reader Aids section at the end of this issue.

3 CFR

Proclamations:

7458 45563

7 CFR

Proposed Rules:

319 45637

14 CFR

39 (11 documents) 45565, 45568, 45570, 45572, 45573, 45575, 45577, 45579, 45581, 45584, 45594

71 (9 documents) 45596, 45597, 45598, 45599, 45600, 45601, 45603

73 45604

Proposed Rules:

39 (5 documents) 45648, 45651, 45653, 45655, 45657

71 (2 documents) 45659, 45660

17 CFR

39 45604

27 CFR

44 45613

46 45613

275 45613

33 CFR

165 45619

38 CFR

3 45620

40 CFR

52 45632

300 45634

Proposed Rules:

52 45661

152 45661

156 45661

50 CFR

20 45730

660 45634

679 45635

Proposed Rules:

17 45662

Federal Register
Vol. 66, No. 168
Wednesday, August 29, 2001

Presidential Documents

Title 3—

The President

Proclamation 7458 of August 24, 2001

Women's Equality Day, 2001

By the President of the United States of America

A Proclamation

Women's Equality Day marks the anniversary of women's enfranchisement and a pivotal victory for women's rights. Our Nation recognized a woman's right to vote with the passage of the 19th Amendment in 1920, but the roots of the women's rights movement go back to at least 80 years earlier.

In 1840, Elizabeth Cady Stanton met Lucretia Mott at the World's Anti-Slavery Convention in London. They, along with the other women there, expected to join in the anti-slavery proceedings, but male delegates refused to allow them to participate. Thus rebuffed, Mott and Stanton began a journey that would lead to the 1848 Seneca Falls Convention. There, the Declaration of Rights and Sentiments called for women's equality, including the right to vote and to take part in our Nation's great moral debates.

Nearly all women's rights advocates also fought for the abolition of slavery. One hundred and fifty years ago, anti-slavery suffragette Sojourner Truth gave a powerful address expounding on the strength of women. Her impassioned call for women to actively participate in social justice movements became a legendary link between abolition and suffrage. That same year, Susan B. Anthony met Elizabeth Cady Stanton, and they later joined Harriet Tubman, Mary Ann Shad Cary, Lucy Stone, and other abolitionists to pursue the goal of women's suffrage. Many 19th Century abolitionist suffragettes did not live to see the fruit of their work for women's enfranchisement, but their efforts led the way for women to fight for and win recognition of their rights as equal participants in our Republic.

Tremendous advancements have been made in the fight for equality. But we must remain diligent in enforcing our Nation's laws. And we still have work to do in this area.

Today, thousands of people, mainly women and children, are trafficked into the United States each year and forced to work in the sex industry, sweatshops, field labor, and domestic servitude. Beyond these vile acts, workplace discrimination and targeted violence continue to take place, despite their rejection by our communities and legal system.

Our efforts to ensure women equal rights must include the protection of women from violence and equal access to justice. This is particularly vital for women who face geographic, cultural, and other barriers to social justice services. Women victimized by crime should receive equitable and compassionate care, including access to advocacy, emergency shelter, law enforcement protection, and legal aid. That is why my 2002 budget requests increased funding for Federal initiatives to combat violence against women and to continue the guarantees of basic civil rights and liberties for women.

As we remember the well-known champions of women's equality, we also honor the millions of women whose private efforts and personal ideals continue to sustain and improve this land. On Women's Equality Day, I call upon all Americans to defend the freedoms gained by those who came before us and to continue to expand our shared vision of social justice and equality.

NOW, THEREFORE, I, GEORGE W. BUSH, President of the United States of America, by virtue of the authority vested in me by the Constitution and laws of the United States, do hereby proclaim August 26, 2001, as Women's Equality Day. I call upon the people of the United States to observe this day with appropriate programs and activities.

IN WITNESS WHEREOF, I have hereunto set my hand this twenty-fourth day of August, in the year of our Lord two thousand one, and of the Independence of the United States of America the two hundred and twenty-sixth.

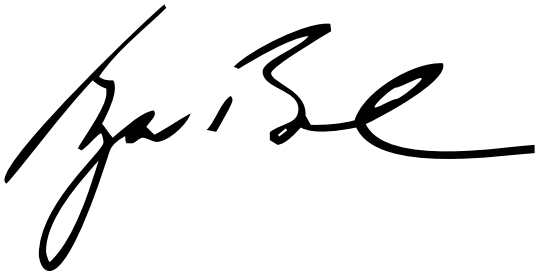

[FR Doc. 01–21962
Filed 8–28–01; 8:45 am]
Billing code 3195–01–P

Rules and Regulations

Federal Register
Vol. 66, No. 168
Wednesday, August 29, 2001

This section of the FEDERAL REGISTER contains regulatory documents having general applicability and legal effect, most of which are keyed to and codified in the Code of Federal Regulations, which is published under 50 titles pursuant to 44 U.S.C. 1510.

The Code of Federal Regulations is sold by the Superintendent of Documents. Prices of new books are listed in the first FEDERAL REGISTER issue of each week.

DEPARTMENT OF TRANSPORTATION

Federal Aviation Administration

14 CFR Part 39

[Docket No. 2001–SW–24–AD; Amendment 39–12407; AD 2001–17–16]

RIN 2120–AA64

Airworthiness Directives; Agusta S.p.A. Model A109E Helicopters

AGENCY: Federal Aviation Administration, DOT.

ACTION: Final rule; request for comments.

SUMMARY: This amendment supersedes an existing airworthiness directive (AD) for Agusta S.p.A. (Agusta) Model A109E helicopters that currently requires visually checking and inspecting each tail rotor blade (blade) for a crack at specified intervals. That AD also requires replacing any cracked blade with an airworthy blade. This amendment contains the same requirements but adds another blade to the applicability. This amendment is necessary because the added blade is manufactured using the same process as the blade that failed. The actions specified by this AD are intended to prevent failure of a blade and subsequent loss of control of the helicopter.

DATES: Effective September 13, 2001.

The incorporation by reference of certain publications listed in the regulations is approved by the Director of the Federal Register as of September 13, 2001.

Comments for inclusion in the Rules Docket must be received on or before October 29, 2001.

ADDRESSES: Submit comments in triplicate to the Federal Aviation Administration (FAA), Office of the Regional Counsel, Southwest Region, Attention: Rules Docket No. 2001–SW–24–AD, 2601 Meacham Blvd., Room 663, Fort Worth, Texas 76137. You may also send comments electronically to the Rules Docket at the following address: 9-asw–adcomments@faa.gov.

The service information referenced in this AD may be obtained from Agusta, 21017 Cascina Costa di Samarate (VA) Italy, Via Giovanni Agusta 520, telephone 39 (0331) 229111, fax 39 (0331) 229605–222595. This information may be examined at the FAA, Office of the Regional Counsel, Southwest Region, 2601 Meacham Blvd., Room 663, Fort Worth, Texas 76137; or at the Office of the Federal Register, 800 North Capitol Street, NW., suite 700, Washington, DC.

FOR FURTHER INFORMATION CONTACT: Richard Monschke, Aviation Safety Engineer, FAA, Rotorcraft Directorate, Rotorcraft Standards Staff, Fort Worth, Texas 76193–0110, telephone (817) 222–5116, fax (817) 222–5961.

SUPPLEMENTARY INFORMATION: On February 2, 2001, the FAA issued AD 2000–25–54, Amendment 39–12106 (66 FR 10185, February 14, 2001), to require visually checking and subsequently inspecting each blade, P/N 109–8132–01–109, for a crack at specified intervals. That AD also requires replacing any cracked blade with an airworthy blade. That action was prompted by five reports of cracked blades. That condition, if not corrected, could result in failure of a blade and subsequent loss of control of the helicopter.

Since the issuance of that AD, the Ente Nazionale per l'Aviazione Civile (ENAC), the airworthiness authority for Italy, notified the FAA that an unsafe condition may exist on Agusta Model A109E helicopters with blades, P/N 109–8132–01–107, that are not affected by AD 2000–25–54. The ENAC advises inspecting certain additional blades for a crack.

Agusta has issued Alert Bollettino Tecnico No. 109EP–14, Revision A, dated March 19, 2001 (ABT), which specifies certain inspections for a crack in blades, part number (P/N) 109–8132–01–109 and –107. Agusta included blade, P/N 109–8132–01–107, in its technical bulletin because the blade is manufactured using the same process as used for P/N 109–8132–01–109. Cracks in blade, P/N 109–8132–01–109, were discovered during maintenance and by a pilot due to an increase of vibratory level, which did not affect the operation of the tail rotor. Agusta is investigating the reason for these cracks, and the instructions in this ABT are given as a precautionary measure. ENAC issued AD 2001–094, dated March 22, 2001, requiring compliance with the ABT.

This helicopter model is manufactured in Italy and is typed certificated for operation in the United States under the provisions of 14 CFR 21.29 and the applicable bilateral agreement. Pursuant to the applicable bilateral agreement, the ENAC has kept the FAA informed of the situation described above. The FAA has examined the findings of the ENAC, reviewed all available information, and determined that AD action is necessary for products of this type design that are certificated for operation in the United States.

Since we have identified an unsafe condition that is likely to exist or develop on other Agusta Model A109E helicopters of the same type design registered in the United States, this AD supersedes AD 2000–25–54. This AD contains the same requirements as AD 2000–25–54 but adds blade, P/N 109–8132–01–107, to the applicability. Therefore, the AD requires the following for each blade, P/N 109–8132–01–107, and –109:

- Before each start of the engines, visually check both sides of each blade for a crack.
- Within 10 hours time-in-service (TIS) and at specified intervals or before the next flight after any abnormal tail rotor vibration, inspect each blade for a crack using a 5-power or higher magnifying glass.
- Within 25 hours TIS and at specified intervals, dye-penetrant inspect each blade for a crack.
- Replace each cracked blade with an airworthy blade before further flight.

The actions must be accomplished in accordance with the ABT described previously. The short compliance time involved is required because the previously described critical unsafe condition can adversely affect the controllability and structural integrity of the helicopter. Therefore, the actions previously listed are required at frequent compliance intervals, and this AD must be issued immediately.

An owner/operator (pilot) may perform the visual check required by this AD and must enter compliance with

paragraph (a) of this AD into the aircraft maintenance records in accordance with 14 CFR 43.11 and 91.417(a)(2)(v). This AD allows a pilot to perform this check because it involves only a visual check for a crack in the blade and can be performed equally well by a pilot or a mechanic.

Since a situation exists that requires the immediate adoption of this regulation, it is found that notice and opportunity for prior public comment hereon are impracticable, and that good cause exists for making this amendment effective in less than 30 days.

The FAA estimates that 29 helicopters will be affected by this AD, that it will take approximately ½ work hour to conduct the 10-hour interval inspection, 1 work hour to conduct the dye-penetrant inspection, and 1 work hour to replace each blade, and that the average labor rate is $60 per work hour. Consumable materials are expected to cost $35 per helicopter. Required parts will cost approximately $10,000 per helicopter if both blades are replaced. Assuming each helicopter flies 200 hours in 6 months, the 10-hour inspection is accomplished 20 times, and the dye-penetrant inspection is accomplished 8 times, and both blades are replaced once, the total cost impact of the AD on U.S. operators is estimated to be $325,815.

Comments Invited

Although this action is in the form of a final rule that involves requirements affecting flight safety and, thus, was not preceded by notice and an opportunity for public comment, comments are invited on this rule. Interested persons are invited to comment on this rule by submitting such written data, views, or arguments as they may desire. Communications should identify the Rules Docket number and be submitted in triplicate to the address specified under the caption **ADDRESSES.** All communications received on or before the closing date for comments will be considered, and this rule may be amended in light of the comments received. Factual information that supports the commenter's ideas and suggestions is extremely helpful in evaluating the effectiveness of the AD action and determining whether additional rulemaking action would be needed.

Comments are specifically invited on the overall regulatory, economic, environmental, and energy aspects of the rule that might suggest a need to modify the rule. All comments submitted will be available in the Rules Docket for examination by interested persons. A report that summarizes each FAA-public contact concerned with the substance of this AD will be filed in the Rules Docket.

Commenters wishing the FAA to acknowledge receipt of their mailed comments submitted in response to this rule must submit a self-addressed, stamped postcard on which the following statement is made: ''Comments to Docket No. 2001–SW–24–AD.'' The postcard will be date stamped and returned to the commenter.

The regulations adopted herein will not have a substantial direct effect on the States, on the relationship between the national Government and the States, or on the distribution of power and responsibilities among the various levels of government. Therefore, it is determined that this final rule does not have federalism implications under Executive Order 13132.

The FAA has determined that this regulation is an emergency regulation that must be issued immediately to correct an unsafe condition in aircraft, and that it is not a ''significant regulatory action'' under Executive Order 12866. It has been determined further that this action involves an emergency regulation under DOT Regulatory Policies and Procedures (44 FR 11034, February 26, 1979). If it is determined that this emergency regulation otherwise would be significant under DOT Regulatory Policies and Procedures, a final regulatory evaluation will be prepared and placed in the Rules Docket. A copy of it, if filed, may be obtained from the Rules Docket at the location provided under the caption **ADDRESSES.**

List of Subjects in 14 CFR Part 39

Air transportation, Aircraft, Aviation safety, Incorporation by reference, Safety.

Adoption of the Amendment

Accordingly, pursuant to the authority delegated to me by the Administrator, the Federal Aviation Administration amends 14 CFR part 39 as follows:

PART 39—AIRWORTHINESS DIRECTIVES

1. The authority citation for part 39 continues to read as follows:

Authority: 49 U.S.C. 106(g), 40113, 44701.

§ 39.13 [Amended]

2. Section 39.13 is amended by removing Amendment 39–12106 (66 FR 10185, February 14, 2001) and by adding a new airworthiness directive (AD), Amendment 39–12407, to read as follows:

2001–17–16 Agusta S.p.A.: Amendment 39–12407. Docket No. 2001–SW–24–AD. Supersedes AD 2000–25–54, Amendment 39–12106, Docket No. 2000–SW–65–AD.

Applicability: Model A109E helicopters, with tail rotor blade (blade), part number (P/N) 109–8132–01–107 or –109, installed, certificated in any category.

Note 1: This AD applies to each helicopter identified in the preceding applicability provision, regardless of whether it has been otherwise modified, altered, or repaired in the area subject to the requirements of this AD. For helicopters that have been modified, altered, or repaired so that the performance of the requirements of this AD is affected, the owner/operator must request approval for an alternative method of compliance in accordance with paragraph (e) of this AD. The request should include an assessment of the effect of the modification, alteration, or repair on the unsafe condition addressed by this AD; and if the unsafe condition has not been eliminated, the request should include specific proposed actions to address it.

Compliance: Required as indicated, unless accomplished previously.

To prevent failure of a blade and subsequent loss of control of the helicopter, accomplish the following:

(a) Before each start of the engines, visually check both sides of each blade for a crack in accordance with Figure 1 of this AD for blade, P/N 109–8132–01–107, or Figure 2 of this AD for blade, P/N 109–8132–01–109. An owner/operator (pilot), holding at least a private pilot certificate, may perform the visual check required by this paragraph and must record compliance with paragraph (a) of this AD in the aircraft maintenance records in accordance with 14 CFR 43.11 and 91.417(a)(2)(v).

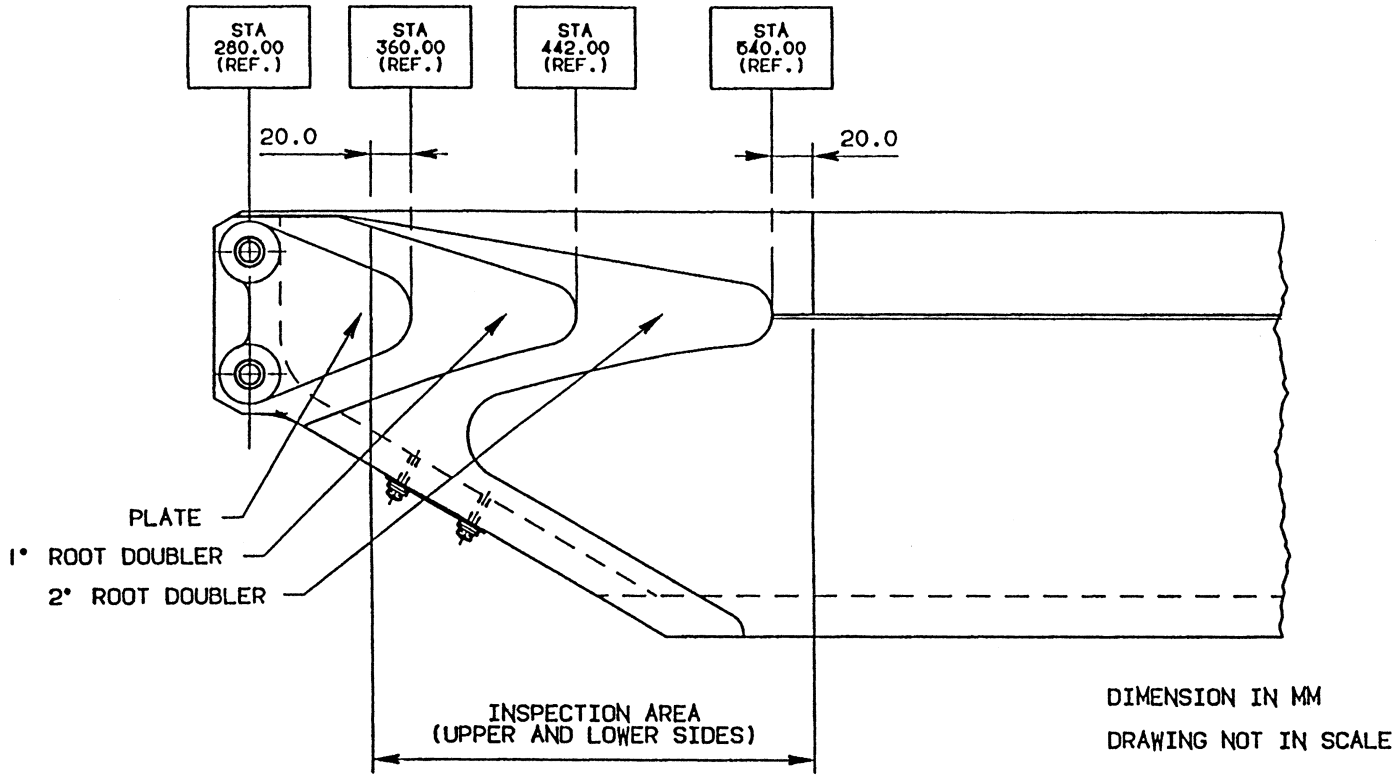

FIGURE 1

P/N 109-8132-01-107 T/R BLADE

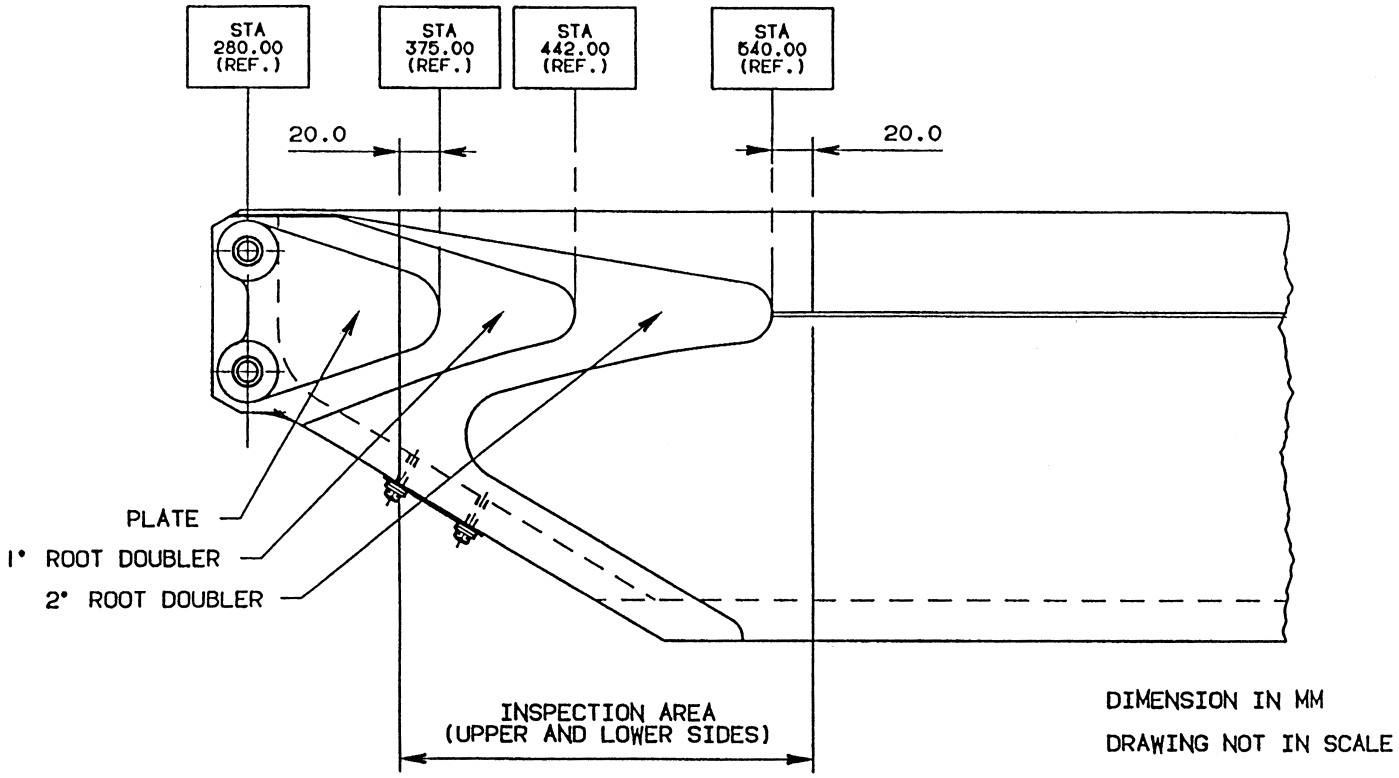

FIGURE 2

P/N 109-8132-01-109 T/R BLADE

(b) Within 10 hours time-in-service (TIS), and thereafter at intervals not to exceed 10 hours TIS or before the next flight after any abnormal tail rotor vibration, inspect each blade for a crack using a 5-power or higher magnifying glass in accordance with the Compliance Instructions, Part II, of Agusta Bollettino Tecnico No. 109EP–14, Revision A, dated March 19, 2001 (ABT).

(c) Within 25 hours TIS and thereafter at intervals not to exceed 25 hours TIS, dye-penetrant inspect each blade for a crack in accordance with the Compliance Instructions, Part III, of the ABT.

(d) If a crack is found, replace the blade with an airworthy blade before further flight.

(e) An alternative method of compliance or adjustment of the compliance time that provides an acceptable level of safety may be used if approved by the Manager, Regulations Group, Rotorcraft Directorate, FAA. Operators shall submit their requests through an FAA Principal Maintenance Inspector, who may concur or comment and then send it to the Manager, Regulations Group.

Note 2: Information concerning the existence of approved alternative methods of compliance with this AD, if any, may be obtained from the Regulations Group.

(f) Special flight permits are prohibited.

(g) The inspections shall be done in accordance with the Compliance Instructions, Parts II and III, of Agusta Alert Bollettino Tecnico No. 109EP–14, Revision A, dated March 19, 2001. This incorporation by reference was approved by the Director of the Federal Register in accordance with 5 U.S.C. 552(a) and 1 CFR part 51. Copies may be obtained from Agusta, 21017 Cascina Costa di Samarate (VA) Italy, Via Giovanni Agusta 520, telephone 39 (0331) 229111, fax 39 (0331) 229605–222595. Copies may be inspected at the FAA, Office of the Regional Counsel, Southwest Region, 2601 Meacham Blvd., Room 663, Fort Worth, Texas; or at the Office of the Federal Register, 800 North Capitol Street, NW., suite 700, Washington, DC.

(h) This amendment becomes effective on September 13, 2001.

Note 3: The subject of this AD is addressed in Ente Nazionale per l'Aviazione Civile (Italy) AD No. 2001–094, dated March 22, 2001.

Issued in Fort Worth, Texas, on August 14, 2001.

Eric Bries,

Acting Manager, Rotorcraft Directorate, Aircraft Certification Service.

[FR Doc. 01–21219 Filed 8–28–01; 8:45 am]

BILLING CODE 4910–13–P

DEPARTMENT OF TRANSPORTATION

Federal Aviation Administration

14 CFR Part 39

[Docket No. 2000–NM–149–AD; Amendment 39–12413; AD 2001–17–22]

RIN 2120–AA64

Airworthiness Directives; McDonnell Douglas Model DC–10 and MD–10 Series Airplanes

AGENCY: Federal Aviation Administration, DOT.

ACTION: Final rule.

SUMMARY: This amendment adopts a new airworthiness directive (AD), applicable to certain McDonnell Douglas Model DC–10 and MD–10 series airplanes, that requires an inspection of the one phase remote control circuit breakers (RCCB) in the main avionics compartment and center accessory compartment to determine their part numbers and serial numbers, and replacement of RCCB's with certain RCCB's, if necessary. This action is necessary to ensure that defective braze

joints of certain latch assemblies of the RCCB are not installed on the airplane. Defective braze joints could fail and prevent the RCCB from tripping during an overload condition, which could result in a fire and smoke in certain wire bundles that are routed to and from the main avionics compartment or center accessory compartment. This action is intended to address the identified unsafe condition.

DATES: Effective October 3, 2001.

The incorporation by reference of certain publications listed in the regulations is approved by the Director of the Federal Register as of October 3, 2001.

ADDRESSES: The service information referenced in this AD may be obtained from Boeing Commercial Aircraft Group, Long Beach Division, 3855 Lakewood Boulevard, Long Beach, California 90846, Attention: Data and Service Management, Dept. C1-L5A (D800–0024). This information may be examined at the Federal Aviation Administration (FAA), Transport Airplane Directorate, Rules Docket, 1601 Lind Avenue, SW., Renton, Washington; or at the FAA, Los Angeles Aircraft Certification Office, 3960 Paramount Boulevard, Lakewood, California; or at the Office of the Federal Register, 800 North Capitol Street, NW., suite 700, Washington, DC.

FOR FURTHER INFORMATION CONTACT: Natalie Phan-Tran, Aerospace Engineer, Systems and Equipment Branch, ANM–130L, FAA, Los Angeles Aircraft Certification Office, 3960 Paramount Boulevard, Lakewood, California 90712–4137; telephone (562) 627–5343; fax (562) 627–5210.

SUPPLEMENTARY INFORMATION: A proposal to amend part 39 of the Federal Aviation Regulations (14 CFR part 39) to include an airworthiness directive (AD) that is applicable to certain McDonnell Douglas Model DC–10 and MD–10 series airplanes was published in the **Federal Register** on November 29, 2000 (65 FR 71074). That action proposed to require an inspection of the one phase remote control circuit breakers (RCCB) in the main avionics compartment and center accessory compartment to determine their part numbers and serial numbers, and replacement of RCCB's with certain RCCB's, if necessary.

Comments Received

Interested persons have been afforded an opportunity to participate in the making of this amendment. Due consideration has been given to the comments received.

Concur With the NPRM

Two commenters concur with the intent and requirements of the NPRM.

Request To Revise the Compliance Time

One commenter, an operator, requests that the compliance time for the ''on-condition'' replacement of the RCCB be revised from ''prior to further flight'' to ''replacement before compliance date.'' The commenter notes that, before the proposed inspection is performed, the extent of the problem is unknown, and it would be hard for the operators to procure sufficient RCCB's. The commenter concludes that such an extension of the compliance time would prevent possible grounding of airplanes.

The FAA does not concur that the compliance time for the ''on-condition'' replacement should be revised. We acknowledge the commenter's concern about the availability of replacement RCCB's; however, the manufacturer has advised us that adequate parts for the replacement of RCCB's are available. Therefore, no change in this regard is necessary to the final rule.

Conclusion

After careful review of the available data, including the comments noted above, the FAA has determined that air safety and the public interest require the adoption of the rule as proposed.

Cost Impact

There are approximately 446 Model DC–10 and MD–10 series airplanes of the affected design in the worldwide fleet. The FAA estimates that 312 airplanes of U.S. registry will be affected by this AD, that it will take approximately 6 work hours per airplane to accomplish the required inspection, and that the average labor rate is $60 per work hour. Based on these figures, the cost impact of the inspection required by this AD on U.S. operators is estimated to be $112,320, or $360 per airplane.

The cost impact figure discussed above is based on assumptions that no operator has yet accomplished any of the requirements of this AD action, and that no operator would accomplish those actions in the future if this AD were not adopted. The cost impact figures discussed in AD rulemaking actions represent only the time necessary to perform the specific actions actually required by the AD. These figures typically do not include incidental costs, such as the time required to gain access and close up, planning time, or time necessitated by other administrative actions.

Regulatory Impact

The regulations adopted herein will not have a substantial direct effect on the States, on the relationship between the national Government and the States, or on the distribution of power and responsibilities among the various levels of government. Therefore, it is determined that this final rule does not have federalism implications under Executive Order 13132.

For the reasons discussed above, I certify that this action (1) is not a ''significant regulatory action'' under Executive Order 12866; (2) is not a ''significant rule'' under DOT Regulatory Policies and Procedures (44 FR 11034, February 26, 1979); and (3) will not have a significant economic impact, positive or negative, on a substantial number of small entities under the criteria of the Regulatory Flexibility Act. A final evaluation has been prepared for this action and it is contained in the Rules Docket. A copy of it may be obtained from the Rules Docket at the location provided under the caption **ADDRESSES.**

List of Subjects in 14 CFR Part 39

Air transportation, Aircraft, Aviation safety, Incorporation by reference, Safety.

Adoption of the Amendment

Accordingly, pursuant to the authority delegated to me by the Administrator, the Federal Aviation Administration amends part 39 of the Federal Aviation Regulations (14 CFR part 39) as follows:

PART 39—AIRWORTHINESS DIRECTIVES

1. The authority citation for part 39 continues to read as follows:

Authority: 49 U.S.C. 106(g), 40113, 44701.

§ 39.13 [Amended]

2. Section 39.13 is amended by adding the following new airworthiness directive:

2001–17–22 McDonnell Douglas: Amendment 39–12413. Docket 2000–NM–149–AD.

Applicability: Model DC–10 and MD–10 series airplanes, as listed in Boeing Alert Service Bulletin DC10–24A164, dated June 22, 2000; certificated in any category.

Note 1: This AD applies to each airplane identified in the preceding applicability provision, regardless of whether it has been modified, altered, or repaired in the area subject to the requirements of this AD. For airplanes that have been modified, altered, or repaired so that the performance of the requirements of this AD is affected, the owner/operator must request approval for an

alternative method of compliance in accordance with paragraph (b) of this AD. The request should include an assessment of the effect of the modification, alteration, or repair on the unsafe condition addressed by this AD; and, if the unsafe condition has not been eliminated, the request should include specific proposed actions to address it.

Compliance: Required as indicated, unless accomplished previously.

To prevent fire and smoke in certain wire bundles that are routed to and from the main avionics compartment or center accessory compartment, accomplish the following:

Inspection and Replacement, if Necessary

(a) Within 6 months after the effective date of this AD, perform a one-time general visual inspection of the one phase remote control circuit breakers (RCCB) in the main avionics compartment and center accessory compartment to determine the part numbers and serial numbers (identified in Table 2 of the Accomplishment Instructions of the service bulletin), in accordance with Boeing Alert Service Bulletin DC10–24A164, dated June 22, 2000.

Note 2: For the purposes of this AD, a general visual inspection is defined as ''A visual examination of an interior or exterior area, installation, or assembly to detect obvious damage, failure, or irregularity. This level of inspection is made under normally available lighting conditions such as daylight, hangar lighting, flashlight, or drop-light, and may require removal or opening of access panels or doors. Stands, ladders, or platforms may be required to gain proximity to the area being checked.''

(1) If any RCCB has a part number listed in Table 2 of the Accomplishment Instructions of the service bulletin and the corresponding serial number is NOT identified in that table, no further action is required by this AD.

(2) If any RCCB has a part number listed in Table 2 of the Accomplishment Instructions of the service bulletin and the corresponding serial number is identified in that table, before further flight, replace the RCCB with a RCCB having the same part number with a serial number that is NOT identified in Table 2, in accordance with the service bulletin.

Alternative Methods of Compliance

(b) An alternative method of compliance or adjustment of the compliance time that provides an acceptable level of safety may be used if approved by the Manager, Los Angeles Aircraft Certification Office (ACO), FAA. Operators shall submit their requests through an appropriate FAA Principal Maintenance Inspector, who may add comments and then send it to the Manager, Los Angeles ACO.

Note 3: Information concerning the existence of approved alternative methods of compliance with this AD, if any, may be obtained from the Los Angeles ACO.

Special Flight Permit

(c) Special flight permits may be issued in accordance with§§ 21.197 and 21.199 of the Federal Aviation Regulations (14 CFR 21.197 and 21.199) to operate the airplane to a location where the requirements of this AD can be accomplished.

Incorporation by Reference

(d) The actions shall be done in accordance with Boeing Alert Service Bulletin DC10–24A164, dated June 22, 2000. This incorporation by reference was approved by the Director of the Federal Register in accordance with 5 U.S.C. 552(a) and 1 CFR part 51. Copies may be obtained from Boeing Commercial Aircraft Group, Long Beach Division, 3855 Lakewood Boulevard, Long Beach, California 90846, Attention: Data and Service Management, Dept. C1–L5A (D800–0024). Copies may be inspected at the FAA, Transport Airplane Directorate, 1601 Lind Avenue, SW., Renton, Washington; at the FAA, Los Angeles Aircraft Certification Office, 3960 Paramount Boulevard, Lakewood, California; or at the Office of the Federal Register, 800 North Capitol Street, NW., suite 700, Washington, DC.

Effective Date

(e) This amendment becomes effective on October 3, 2001.

Issued in Renton, Washington, on August 20, 2001.

Vi L. Lipski,

Manager, Transport Airplane Directorate, Aircraft Certification Service.

[FR Doc. 01–21495 Filed 8–28–01; 8:45 am]

BILLING CODE 4910–13–U

DEPARTMENT OF TRANSPORTATION

Federal Aviation Administration

14 CFR Part 39

[Docket No. 99–NM–371–AD; Amendment 39–12414; AD 2001–17–23]

RIN 2120–AA64

Airworthiness Directives; Bombardier Model DHC–8–100, –200, and –300 Series Airplanes

AGENCY: Federal Aviation Administration, DOT.

ACTION: Final rule.

SUMMARY: This amendment adopts a new airworthiness directive (AD), applicable to certain Bombardier Model DHC–8–100, –200, and –300 series airplanes, that requires a one-time detailed visual inspection to detect damage of the ladder plates and access cover areas of the upper surface of the wings; repair, if necessary; and installation of new O-ring seals. This amendment is prompted by issuance of mandatory continuing airworthiness information by a foreign civil airworthiness authority. The actions specified by this AD are intended to prevent damage of the upper wing ladder plates, which could result in displacement of the adjacent channel seals and consequent reduced lightning strike protection of the fuel tanks.

DATES: Effective October 3, 2001.

The incorporation by reference of certain publications listed in the regulations is approved by the Director of the Federal Register as of October 3, 2001.

ADDRESSES: The service information referenced in this AD may be obtained from Bombardier, Inc., Bombardier Regional Aircraft Division, 123 Garrett Boulevard, Downsview, Ontario M3K 1Y5, Canada. This information may be examined at the Federal Aviation Administration (FAA), Transport Airplane Directorate, Rules Docket, 1601 Lind Avenue, SW., Renton, Washington; or at the FAA, New York Aircraft Certification Office, 10 Fifth Street, Third Floor, Valley Stream, New York; or at the Office of the Federal Register, 800 North Capitol Street, NW., suite 700, Washington, DC.

FOR FURTHER INFORMATION CONTACT: James E. Delisio, Aerospace Engineer, Airframe and Propulsion Branch, ANE–171, FAA, New York Aircraft Certification Office, 10 Fifth Street, Third Floor, Valley Stream, New York 11581; telephone (516) 256–7521; fax (516) 568–2716.

SUPPLEMENTARY INFORMATION: A proposal to amend part 39 of the Federal Aviation Regulations (14 CFR part 39) to include an airworthiness directive (AD) that is applicable to certain Bombardier Model DHC–8–100, –200, and –300 series airplanes was published as a supplemental notice of proposed rulemaking (NPRM) in the **Federal Register** on January 5, 2001 (66 FR 1057). That action proposed to require a one-time detailed visual inspection to detect damage of the ladder plates and access cover areas of the upper surface of the wings; repair, if necessary; and installation of new O-ring seals. That action also proposed to revise the inspection requirements of the original NPRM by correcting a reference to a repair manual.

Comments

Interested persons have been afforded an opportunity to participate in the making of this amendment. No comments were submitted.

Conclusion

The FAA has determined that air safety and the public interest require the adoption of the rule as proposed.

Cost Impact

There are approximately 516 Model DHC–8–100, –200, and –300 series

airplanes in the worldwide fleet. The FAA estimates that 235 Model DHC–8–100, –200, and –300 series airplanes of U.S. registry will be affected by this AD, that it will take approximately 6 work hours per airplane to accomplish the required actions, and that the average labor rate is $60 per work hour. Based on these figures, the cost impact of the AD on U.S. operators is estimated to be $84,600, or $360 per airplane.

The cost impact figure discussed above is based on assumptions that no operator has yet accomplished any of the requirements of this AD action, and that no operator would accomplish those actions in the future if this AD were not adopted. The cost impact figures discussed in AD rulemaking actions represent only the time necessary to perform the specific actions actually required by the AD. These figures typically do not include incidental costs, such as the time required to gain access and close up, planning time, or time necessitated by other administrative actions.

Regulatory Impact

The regulations adopted herein will not have a substantial direct effect on the States, on the relationship between the national Government and the States, or on the distribution of power and responsibilities among the various levels of government. Therefore, it is determined that this final rule does not have federalism implications under Executive Order 13132.

For the reasons discussed above, I certify that this action (1) is not a ''significant regulatory action'' under Executive Order 12866; (2) is not a ''significant rule'' under DOT Regulatory Policies and Procedures (44 FR 11034, February 26, 1979); and (3) will not have a significant economic impact, positive or negative, on a substantial number of small entities under the criteria of the Regulatory Flexibility Act. A final evaluation has been prepared for this action and it is contained in the Rules Docket. A copy of it may be obtained from the Rules Docket at the location provided under the caption **ADDRESSES.**

List of Subjects in 14 CFR Part 39

Air transportation, Aircraft, Aviation safety, Incorporation by reference, Safety.

Adoption of the Amendment

Accordingly, pursuant to the authority delegated to me by the Administrator, the Federal Aviation Administration amends part 39 of the Federal Aviation Regulations (14 CFR part 39) as follows:

PART 39—AIRWORTHINESS DIRECTIVES

1. The authority citation for part 39 continues to read as follows:

Authority: 49 U.S.C. 106(g), 40113, 44701.

§ 39.13 [Amended]

2. Section 39.13 is amended by adding the following new airworthiness directive:

2001–17–23 Bombardier, Inc. (Formerly de Havilland, Inc.): Amendment 39–12414. Docket 99–NM–371–AD.

Applicability: Model DHC–8–100, –200, and –300 series airplanes, having serial numbers 003 through 528 inclusive and 531; certificated in any category.

Note 1: This AD applies to each airplane identified in the preceding applicability provision, regardless of whether it has been modified, altered, or repaired in the area subject to the requirements of this AD. For airplanes that have been modified, altered, or repaired so that the performance of the requirements of this AD is affected, the owner/operator must request approval for an alternative method of compliance in accordance with paragraph (b) of this AD. The request should include an assessment of the effect of the modification, alteration, or repair on the unsafe condition addressed by this AD; and, if the unsafe condition has not been eliminated, the request should include specific proposed actions to address it.

Compliance: Required as indicated, unless accomplished previously.

To prevent damage of the upper wing ladder plates, which could result in displacement of the adjacent channel seals and consequent reduced lightning strike protection of the fuel tanks, accomplish the following:

Inspection and Repair

(a) Within 9 months or at the next maintenance period during which the fuel tanks are accessed after the effective date of this AD, whichever occurs earlier: Perform a one-time detailed visual inspection to detect damage (i.e., fretting and/or corrosion) of the ladder plates and access cover areas of the upper surface of the wings per paragraph III.A., III.B., or III.C., as applicable, of the Accomplishment Instructions of Bombardier Service Bulletin 8–57–41, Revision ''C'', dated August 4, 2000.

Note 2: For the purposes of this AD, a detailed visual inspection is defined as: ''An intensive visual examination of a specific structural area, system, installation, or assembly to detect damage, failure, or irregularity. Available lighting is normally supplemented with a direct source of good lighting at intensity deemed appropriate by the inspector. Inspection aids such as mirror, magnifying lenses, etc. may be used. Surface cleaning and elaborate access procedures may be required.''

(1) If no damage is detected, prior to further flight, install new 0.103-inch-diameter O-ring seals per paragraph III.A., III.B., or III.C., as applicable, of the Accomplishment Instructions of the service bulletin.

(2) If any damage is detected that is within the limits specified in de Havilland Dash 8 Generic Structural Repair Schemes Manual PSM 1–8–3RS or PSM 1–82–3RS Chapter 57 (''Contents'' and ''Repair Index''), before further flight, repair the damage per de Havilland Dash 8 Generic Structural Repair Schemes Manual PSM 1–8–3RS or PSM 1–82–3RS Chapter 57 (''Contents'' and ''Repair Index''), and install new 0.103-inch-diameter O-ring seals per paragraph III.A., III.B., or III.C., as applicable, of the Accomplishment Instructions of the service bulletin.

(3) If any damage is detected that is outside the limits specified in de Havilland Dash 8 Generic Structural Repair Schemes Manual PSM 1–8–3RS or PSM 1–82–3RS Chapter 57 (''Contents'' and ''Repair Index''), before further flight, repair per a method approved by the Manager, New York Aircraft Certification Office (ACO), FAA, and install new 0.103-inch-diameter O-ring seals.

Note 3: Although the Bombardier service bulletin includes references to solvents that are not available for use in the United States, operators may use appropriate substitute solvents per standard industry maintenance practices.

Alternative Methods of Compliance

(b) An alternative method of compliance or adjustment of the compliance time that provides an acceptable level of safety may be used if approved by the Manager, New York ACO, FAA. Operators shall submit their requests through an appropriate FAA Principal Maintenance Inspector, who may add comments and then send it to the Manager, New York ACO.

Note 4: Information concerning the existence of approved alternative methods of compliance with this AD, if any, may be obtained from the New York ACO.

Special Flight Permits

(c) Special flight permits may be issued in accordance with sections 21.197 and 21.199 of the Federal Aviation Regulations (14 CFR 21.197 and 21.199) to operate the airplane to a location where the requirements of this AD can be accomplished.

Incorporation by Reference

(d) Except as provided in paragraphs (a)(2) and (a)(3) of this AD, the actions shall be done in accordance with Bombardier Service Bulletin 8–57–41, Revision ''C'', dated August 4, 2000. This incorporation by reference was approved by the Director of the Federal Register in accordance with 5 U.S.C. 552(a) and 1 CFR part 51. Copies may be obtained from Bombardier, Inc., Bombardier Regional Aircraft Division, 123 Garrett Boulevard, Downsview, Ontario M3K 1Y5, Canada. Copies may be inspected at the FAA, Transport Airplane Directorate, 1601 Lind Avenue, SW., Renton, Washington; or at the FAA, New York Aircraft Certification Office, 10 Fifth Street, Third Floor, Valley Stream, New York; or at the Office of the Federal Register, 800 North Capitol Street, NW., suite 700, Washington, DC.

Note 5: The subject of this AD is addressed in Canadian airworthiness directive CF–99–20, dated July 20, 1999.

Effective Date

(e) This amendment becomes effective on October 3, 2001.

Issued in Renton, Washington, on August 20, 2001.

Vi L. Lipski,

Manager, Transport Airplane Directorate, Aircraft Certification Service.

[FR Doc. 01–21494 Filed 8–28–01; 8:45 am]

BILLING CODE 4910–13–U

DEPARTMENT OF TRANSPORTATION

Federal Aviation Administration

14 CFR Part 39

[Docket No. 2000–NM–378–AD; Amendment 39–12415; AD 2001–17–24]

RIN 2120–AA64

Airworthiness Directives; Boeing Model 707 and 720 Series Airplanes

AGENCY: Federal Aviation Administration, DOT.

ACTION: Final rule.

SUMMARY: This amendment adopts a new airworthiness directive (AD), applicable to certain Boeing Model 707 and 720 series airplanes, that requires a preventive modification of the front spar fitting on the outboard engine nacelle. This action is necessary to prevent fatigue cracking of the front spar fitting on the outboard engine nacelle, which could reduce the structural integrity of the nacelle, and result in separation of the engine from the airplane. This action is intended to address the identified unsafe condition.

DATES: Effective October 3, 2001.

The incorporation by reference of certain publications listed in the regulations is approved by the Director of the Federal Register as of October 3, 2001.

ADDRESSES: The service information referenced in this AD may be obtained from Boeing Commercial Airplane Group, P.O. Box 3707, Seattle, Washington 98124–2207. This information may be examined at the Federal Aviation Administration (FAA), Transport Airplane Directorate, Rules Docket, 1601 Lind Avenue, SW., Renton, Washington; or at the Office of the Federal Register, 800 North Capitol Street, NW., suite 700, Washington, DC.

FOR FURTHER INFORMATION CONTACT: Duong Tran, Aerospace Engineer, Airframe Branch, ANM–120S, FAA, Seattle Aircraft Certification Office, 1601 Lind Avenue, SW., Renton, Washington 98055–4056; telephone (425) 227–2773; fax (425) 227–1181.

SUPPLEMENTARY INFORMATION: A proposal to amend part 39 of the Federal Aviation Regulations (14 CFR part 39) to include an airworthiness directive (AD) that is applicable to certain Boeing Model 707 and 720 series airplanes was published in the **Federal Register** on June 5, 2001 (66 FR 30105). That action proposed to require a preventive modification of the front spar fitting on the outboard engine nacelle.

Comments

Interested persons have been afforded an opportunity to participate in the making of this amendment. No comments were submitted in response to the proposal or the FAA's determination of the cost to the public.

Conclusion

The FAA has determined that air safety and the public interest require the adoption of the rule as proposed.

Cost Impact

There are approximately 13 Model 707 and 720 series airplanes of the affected design in the worldwide fleet. The FAA estimates that 3 airplanes of U.S. registry will be affected by this AD, that it will take approximately 64 work hours per airplane to accomplish the required modification, and that the average labor rate is $60 per work hour. Required parts will cost approximately $1,300 per airplane. Based on these figures, the cost impact of the AD on U.S. operators is estimated to be $15,420, or $5,140 per airplane.

The cost impact figure discussed above is based on assumptions that no operator has yet accomplished any of the requirements of this AD action, and that no operator would accomplish those actions in the future if this AD were not adopted. The cost impact figures discussed in AD rulemaking actions represent only the time necessary to perform the specific actions actually required by the AD. These figures typically do not include incidental costs, such as the time required to gain access and close up, planning time, or time necessitated by other administrative actions.

Regulatory Impact

The regulations adopted herein will not have a substantial direct effect on the States, on the relationship between the national Government and the States, or on the distribution of power and responsibilities among the various levels of government. Therefore, it is determined that this final rule does not have federalism implications under Executive Order 13132.

For the reasons discussed above, I certify that this action (1) is not a ''significant regulatory action'' under Executive Order 12866; (2) is not a ''significant rule'' under DOT Regulatory Policies and Procedures (44 FR 11034, February 26, 1979); and (3) will not have a significant economic impact, positive or negative, on a substantial number of small entities under the criteria of the Regulatory Flexibility Act. A final evaluation has been prepared for this action and it is contained in the Rules Docket. A copy of it may be obtained from the Rules Docket at the location provided under the caption **ADDRESSES.**

List of Subjects in 14 CFR Part 39

Air transportation, Aircraft, Aviation safety, Incorporation by reference, Safety.

Adoption of the Amendment

Accordingly, pursuant to the authority delegated to me by the Administrator, the Federal Aviation Administration amends part 39 of the Federal Aviation Regulations (14 CFR part 39) as follows:

PART 39—AIRWORTHINESS DIRECTIVES

1. The authority citation for part 39 continues to read as follows:

Authority: 49 U.S.C. 106(g), 40113, 44701.

§ 39.13 [Amended]

2. Section 39.13 is amended by adding the following new airworthiness directive:

2001–17–24 Boeing: Amendment 39–12415. Docket 2000–NM–378–AD.

Applicability: Model 707 and 720 series airplanes, as listed in Boeing Service Bulletin 1541, Revision 3, dated February 15, 1967; certificated in any category.

Note 1: This AD applies to each airplane identified in the preceding applicability provision, regardless of whether it has been modified, altered, or repaired in the area subject to the requirements of this AD. For airplanes that have been modified, altered, or repaired so that the performance of the requirements of this AD is affected, the owner/operator must request approval for an alternative method of compliance in accordance with paragraph (c) of this AD. The request should include an assessment of the effect of the modification, alteration, or repair on the unsafe condition addressed by this AD; and, if the unsafe condition has not been eliminated, the request should include specific proposed actions to address it.

Compliance: Required as indicated, unless accomplished previously.

To prevent fatigue cracking of the front spar fitting on the outboard engine nacelle,

which could reduce the structural integrity of the nacelle, and result in separation of the engine from the airplane, accomplish the following:

Preventive Modification

(a) Prior to the accumulation of 20,000 total flight cycles, or within 24 months after the effective date of this AD, whichever occurs later, install the preventive modification of the front spar fitting on the outboard engine nacelle. Do the modification (including replacement of the front spar fitting with a new, improved (stronger) fitting, and modification of the front spar chord to distribute stress loads over the entire front spar fitting) according to Boeing Service Bulletin 1541, Revision 3, dated February 15, 1967.

Note 2: Modification of the front spar fitting on the outboard engine nacelle (including replacement of the front spar fitting with a new, improved (stronger) fitting, and modification of the front spar chord to distribute stress loads over the entire front spar fitting) accomplished prior to the effective date of this AD according to Boeing Service Bulletin 1541, dated July 1, 1962; Revision 1, dated January 29, 1963; Revision 2, dated February 11, 1964; or Supplement 1541(R–2)A, dated April 2, 1964; is acceptable for compliance with the requirements of paragraph (a) of this AD.

Spares

(b) As of the effective date of this AD, no person shall install a front spar fitting, part number 65–2532 or 65–2532–5, on the outboard engine nacelle on any airplane.

Alternative Methods of Compliance

(c) An alternative method of compliance or adjustment of the compliance time that provides an acceptable level of safety may be used if approved by the Manager, Seattle Aircraft Certification Office (ACO), FAA. Operators shall submit their requests through an appropriate FAA Principal Maintenance Inspector, who may add comments and then send it to the Manager, Seattle ACO.

Note 3: Information concerning the existence of approved alternative methods of compliance with this AD, if any, may be obtained from the Seattle ACO.

Special Flight Permits

(d) Special flight permits may be issued in accordance with sections 21.197 and 21.199 of the Federal Aviation Regulations (14 CFR 21.197 and 21.199) to operate the airplane to a location where the requirements of this AD can be accomplished.

Incorporation by Reference

(e) The preventive modification shall be done in accordance with Boeing Service Bulletin 1541, Revision 3, dated February 15, 1967, which contains the following effective pages:

Page No.	Revision level shown on page	Date shown on page
1–4	3	Feb. 15, 1967.
5–21	Supplement 1541(R–2)A.	Apr. 2, 1964.

This incorporation by reference was approved by the Director of the Federal Register in accordance with 5 U.S.C. 552(a) and 1 CFR part 51. Copies may be obtained from Boeing Commercial Airplane Group, P.O. Box 3707, Seattle, Washington 98124–2207. Copies may be inspected at the FAA, Transport Airplane Directorate, 1601 Lind Avenue, SW., Renton, Washington; or at the Office of the Federal Register, 800 North Capitol Street, NW., suite 700, Washington, DC.

Effective Date

(f) This amendment becomes effective on October 3, 2001.

Issued in Renton, Washington, on August 20, 2001.

Vi L. Lipski,

Manager, Transport Airplane Directorate, Aircraft Certification Service.

[FR Doc. 01–21493 Filed 8–28–01; 8:45 am]

BILLING CODE 4910–13–P

DEPARTMENT OF TRANSPORTATION

Federal Aviation Administration

14 CFR Part 39

[Docket No. 2000–NM–294–AD; Amendment 39–12416; AD 2001–17–25]

RIN 2120–AA64

Airworthiness Directives; Boeing Model 747 Series Airplanes

AGENCY: Federal Aviation Administration, DOT.

ACTION: Final rule.

SUMMARY: This amendment supersedes an existing airworthiness directive (AD), applicable to certain Boeing Model 747 series airplanes, that currently requires inspection of the aft trunnion of the wing landing gear for cracks and corrosion, and corrective action, if necessary. This amendment requires new repetitive inspections for cracks or corrosion of the aft trunnion outer cylinders of the wing landing gear, follow-on actions, and repetitive overhaul of the wing landing gear. The new actions also apply to airplanes not included in the applicability of the existing AD. The actions specified by this AD are intended to find and fix cracking or corrosion of the aft trunnion of the wing landing gear, which could result in collapse of the wing landing gear and consequent reduced controllability of the airplane.

DATES: Effective October 3, 2001.

The incorporation by reference of certain publications listed in the regulations is approved by the Director of the Federal Register as of October 3, 2001.

ADDRESSES: The service information referenced in this AD may be obtained from Boeing Commercial Airplane Group, P.O. Box 3707, Seattle, Washington 98124–2207. This information may be examined at the Federal Aviation Administration (FAA), Transport Airplane Directorate, Rules Docket, 1601 Lind Avenue, SW., Renton, Washington; or at the Office of the Federal Register, 800 North Capitol Street, NW., suite 700, Washington, DC.

FOR FURTHER INFORMATION CONTACT: Tamara Anderson, Aerospace Engineer, Airframe Branch, ANM–120S, FAA, Seattle Aircraft Certification Office, 1601 Lind Avenue, SW., Renton, Washington 98055–4056; telephone (425) 227–2771; fax (425) 227–1181.

SUPPLEMENTARY INFORMATION: A proposal to amend part 39 of the Federal Aviation Regulations (14 CFR part 39) by superseding AD 90–06–18 R1, amendment 39–6706 (55 FR 33650, August 17, 1990), which is applicable to certain Boeing Model 747 series airplanes, was published in the **Federal Register** on April 25, 2001 (66 FR 20763). The action proposed to continue to require inspection of the aft trunnion of the wing landing gear for cracks and corrosion, and corrective action, if necessary. The action also proposed to require new repetitive inspections for cracks or corrosion of the aft trunnion outer cylinders of the wing landing gear, follow-on actions, and repetitive overhaul of the wing landing gear. The new proposed actions would also apply to airplanes not included in the applicability of the existing AD.

Comments

Interested persons have been afforded an opportunity to participate in the making of this amendment. Due consideration has been given to the single comment received.

Clarify Requirements of Paragraph (c) for New Production Airplanes

One commenter states that paragraph (c) of the proposed rule does not give credit for new-production airplanes and asks that the FAA clarify requirements for such new airplanes.

We infer that the commenter is concerned about the compliance time for the actions required by paragraph (c) of this AD, and we concur that we need to revise the compliance time to accommodate new airplanes. As

paragraph (c) is written in the proposed rule, new airplanes delivered after 180 days after the effective date of this AD may be grounded until the actions required by paragraph (c) of this AD are done. Therefore, we have revised the compliance time of paragraph (c) of this AD to 180 days since the airplane's date of manufacture, or 180 days after the effective date of this AD, whichever occurs later. We find that this compliance time will allow adequate time for new airplanes to continue to operate before complying with paragraph (c) of this AD without compromising safety.

Conclusion

After careful review of the available data, including the comment noted above, the FAA has determined that air safety and the public interest require the adoption of the rule with the change previously described. The FAA has determined that this change will neither increase the economic burden on any operator nor increase the scope of the AD.

Cost Impact

There are approximately 1,132 Model 747 series airplanes of the affected design in the worldwide fleet.

In AD 90–06–18 R1, the FAA estimated that the actions in that AD would affect 163 airplanes of U.S. registry. The actions that are currently required by AD 90–06–18 R1 take approximately 45 work hours per airplane to accomplish, at an average labor rate of $60 per work hour. Based on these figures, the FAA estimates the cost impact of the currently required actions on U.S. operators to be $440,100, or $2,700 per airplane, per inspection cycle.

The FAA estimates that this new AD will affect 233 airplanes of U.S. registry. The new inspections required by this AD will take approximately 8 work hours per airplane to accomplish, at an average labor rate of $60 per work hour. Based on these figures, the FAA estimates the cost impact of these required inspections on U.S. operators to be $111,840, or $480 per airplane, per inspection cycle.

The new overhaul required by this AD action will take approximately 320 work hours per airplane to accomplish, at an average labor rate of $60 per work hour. Based on these figures, the FAA estimates the cost impact of the required overhaul on U.S. operators to be $4,473,600, or $19,200 per airplane, per overhaul.

The cost impact figures discussed above are based on assumptions that no operator has yet accomplished any of the requirements of this AD action, and that no operator would accomplish those actions in the future if this AD were not adopted. The cost impact figures discussed in AD rulemaking actions represent only the time necessary to perform the specific actions actually required by the AD. These figures typically do not include incidental costs, such as the time required to gain access and close up, planning time, or time necessitated by other administrative actions.

Regulatory Impact

The regulations adopted herein will not have a substantial direct effect on the States, on the relationship between the national Government and the States, or on the distribution of power and responsibilities among the various levels of government. Therefore, it is determined that this final rule does not have federalism implications under Executive Order 13132.

For the reasons discussed above, I certify that this action (1) is not a ''significant regulatory action'' under Executive Order 12866; (2) is not a ''significant rule'' under DOT Regulatory Policies and Procedures (44 FR 11034, February 26, 1979); and (3) will not have a significant economic impact, positive or negative, on a substantial number of small entities under the criteria of the Regulatory Flexibility Act. A final evaluation has been prepared for this action and it is contained in the Rules Docket. A copy of it may be obtained from the Rules Docket at the location provided under the caption **ADDRESSES.**

List of Subjects in 14 CFR Part 39

Air transportation, Aircraft, Aviation safety, Incorporation by reference, Safety.

Adoption of the Amendment

Accordingly, pursuant to the authority delegated to me by the Administrator, the Federal Aviation Administration amends part 39 of the Federal Aviation Regulations (14 CFR part 39) as follows:

PART 39—AIRWORTHINESS DIRECTIVES

1. The authority citation for part 39 continues to read as follows:

Authority: 49 U.S.C. 106(g), 40113, 44701.

§ 39.13 [Amended]

2. Section 39.13 is amended by removing amendment 39–6706 (55 FR 33650, August 17, 1990), and by adding a new airworthiness directive (AD), amendment 39–12416, to read as follows:

2001–17–25 Boeing: Amendment 39–12416. Docket 2000–NM–294–AD. Supersedes AD 90–06–18 R1, Amendment 39–6706.

Applicability: All Model 747 series airplanes, certificated in any category.

Note 1: This AD applies to each airplane identified in the preceding applicability provision, regardless of whether it has been modified, altered, or repaired in the area subject to the requirements of this AD. For airplanes that have been modified, altered, or repaired so that the performance of the requirements of this AD is affected, the owner/operator must request approval for an alternative method of compliance in accordance with paragraph (e)(1) of this AD. The request should include an assessment of the effect of the modification, alteration, or repair on the unsafe condition addressed by this AD; and, if the unsafe condition has not been eliminated, the request should include specific proposed actions to address it.

Compliance: Required as indicated, unless accomplished previously.

To find and fix cracking or corrosion of the aft trunnion of the wing landing gear, which could result in collapse of the wing landing gear and consequent reduced controllability of the airplane, accomplish the following:

Restatement of Requirements of AD 90–06–18 R1

Repetitive Inspections and Corrective Actions (Certain Airplanes)

(a) For airplanes listed in Groups 1, 2, and 3 in Boeing Service Bulletin 747–32–2190, Revision 4, dated October 26, 1989, inspect as follows:

(1) Within the next 120 days after August 17, 1990 (the effective date of AD 90–06–18 R1, amendment 39–6706), perform a visual inspection, or a visual-plus-eddy-current inspection, of the wing landing gear at the trunnion, for cracks and corrosion, in accordance with Boeing Service Bulletin 747–32–2190, Revision 4, dated October 26, 1989.

(2) If no cracks or corrosion are found, repeat the inspection described in paragraph (a)(1) of this AD at intervals not to exceed 6 months if the visual inspection option was selected for the previous inspection, or at intervals not to exceed 18 months if the visual-plus-eddy-current inspection option was selected for the previous inspection. Doing paragraph (b), (c), or (d) of this AD ends the repetitive inspections required by this paragraph.

(3) Except as provided by paragraph (a)(4) of this AD, if cracks or corrosion are found, prior to further flight, remove and rework or replace cracked/corroded parts in accordance with Boeing Service Bulletin 747–32–2190, Revision 4, dated October 26, 1989.

(4) If only corrosion is found, as an alternative to paragraph (a)(3) of this AD, accomplish the terminating action described in Boeing Service Bulletin 747–32–2190, Revision 4, dated October 26, 1989, within 12 months after detection of corrosion, but no later than 36 months after August 17, 1990; and high frequency eddy current inspect the

wing landing gear trunnion at intervals not to exceed 6 months, until the terminating action is accomplished. Doing paragraph (b), (c), or (d) of this AD ends the repetitive inspections required by this paragraph.

Optional Terminating Action for Requirements of Paragraph (a)

(b) For airplanes listed in Groups 1, 2, and 3 in Boeing Service Bulletin 747–32–2190, Revision 4, dated October 26, 1989: Modification in accordance with Boeing Service Bulletin 747–32–2190, Revision 4, dated October 26, 1989, constitutes terminating action for the reinspection requirements of paragraph (a) of this AD.

New Requirements of This AD

Repetitive Detailed Visual Inspections and Follow-On Actions (All Airplanes)

(c) Within 180 days since the airplane's date of delivery or 180 days after the effective date of this AD, whichever occurs later, do a detailed visual inspection using a borescope to find cracking and corrosion of the aft trunnion outer cylinders of the wing landing gear. Do the inspection per Figure 2 of Boeing Alert Service Bulletin 747–32A2465, Revision 1, dated July 20, 2000. The detailed visual inspection is contained in Part 1 of the service bulletin. Thereafter, repeat the inspection at intervals not to exceed 6 months.

(1) If no corrosion or cracking is found during any inspection per paragraph (c) of this AD, before further flight, apply corrosion preventative compound, per the service bulletin. Repeat the application of corrosion preventative compound after each inspection per paragraph (c) of this AD.

(2) If any corrosion or cracking is found during any inspection per paragraph (c) of this AD, before further flight, repair per a method approved by the Manager, Seattle Aircraft Certification Office (ACO), FAA; or per data meeting the type certification basis of the airplane approved by a Boeing Company Designated Engineering Representative (DER) who has been authorized by the Manager, Seattle ACO, to make such findings. For a repair method to be approved by the Manager, Seattle ACO, as required by this paragraph, the approval letter must specifically reference this AD.

Note 2: For the purposes of this AD, a detailed visual inspection is defined as: ''An intensive visual examination of a specific structural area, system, installation, or assembly to detect damage, failure, or irregularity. Available lighting is normally supplemented with a direct source of good lighting at intensity deemed appropriate by the inspector. Inspection aids such as mirror, magnifying lenses, etc., may be used. Surface cleaning and elaborate access procedures may be required.''

Overhaul (All Airplanes)

(d) At the applicable compliance time stated in paragraph (d)(1) or (d)(2) of this AD, and thereafter at intervals not to exceed 10 years, overhaul the wing landing gear per Flag Note 2 of Figure 1 of Boeing Alert Service Bulletin 747–32A2465, Revision 1, dated July 20, 2000. If any cracking or corrosion outside the overhaul limits is found during this overhaul, before further flight, repair per a method approved by the Manager, Seattle ACO; or per data meeting the type certification basis of the airplane approved by a Boeing Company DER who has been authorized by the Manager, Seattle ACO, to make such findings. For a repair method to be approved by the Manager, Seattle ACO, as required by this paragraph, the approval letter must specifically reference this AD. For affected airplanes, doing this overhaul ends the repetitive inspections required by paragraph (a) of this AD.

(1) For Group 1 airplanes listed in Boeing Alert Service Bulletin 747–32A2465, Revision 1, on which the wing landing gear has NOT been modified per Flag Note 1 of Figure 1 of the service bulletin: Overhaul the wing landing gear within 48 months after the effective date of this AD.

(2) For Group 1 airplanes listed in Boeing Alert Service Bulletin 747–32A2465, Revision 1, on which the wing landing gear HAS been modified per Flag Note 1 of Figure 1 of the service bulletin; OR for Groups 2 and 3 airplanes listed in Boeing Alert Service Bulletin 747–32A2465, Revision 1: Overhaul the wing landing gear within 10 years since delivery of the airplane or last overhaul, or within 180 days after the effective date of this AD, whichever comes later.

Alternative Methods of Compliance

(e)(1) An alternative method of compliance or adjustment of the compliance time that provides an acceptable level of safety may be used if approved by the Manager, Seattle ACO. Operators shall submit their requests through an appropriate FAA Principal Maintenance Inspector, who may add comments and then send it to the Manager, Seattle ACO.

(2) Alternative methods of compliance, approved previously in accordance with AD 90–06–18 R1, amendment 39–6706, are approved as alternative methods of compliance for paragraphs (a) and (b) of this AD.

Note 3: Information concerning the existence of approved alternative methods of compliance with this AD, if any, may be obtained from the Seattle ACO.

Special Flight Permits

(f) Special flight permits may be issued in accordance with sections 21.197 and 21.199 of the Federal Aviation Regulations (14 CFR 21.197 and 21.199) to operate the airplane to a location where the requirements of this AD can be accomplished.

Incorporation by Reference

(g) Except as provided by paragraphs (c)(2) and (d) of this AD, the actions shall be done in accordance with Boeing Service Bulletin 747–32–2190, Revision 4, dated October 26, 1989; and Boeing Alert Service Bulletin 747–32A2465, Revision 1, dated July 20, 2000; as applicable. This incorporation by reference was approved by the Director of the Federal Register in accordance with 5 U.S.C. 552(a) and 1 CFR part 51. Copies may be obtained from Boeing Commercial Airplane Group, P.O. Box 3707, Seattle, Washington 98124–2207. Copies may be inspected at the FAA, Transport Airplane Directorate, 1601 Lind Avenue, SW., Renton, Washington; or at the Office of the Federal Register, 800 North Capitol Street, NW., suite 700, Washington, DC.

Effective Date

(h) This amendment becomes effective on October 3, 2001.

Issued in Renton, Washington, on August 20, 2001.

Vi L. Lipski,

Manager, Transport Airplane Directorate, Aircraft Certification Service.

[FR Doc. 01–21492 Filed 8–28–01; 8:45 am]

BILLING CODE 4910–13–U

DEPARTMENT OF TRANSPORTATION

Federal Aviation Administration

14 CFR Part 39

[Docket No. 2000–NM–373–AD; Amendment 39–12417; AD 2001–17–26]

RIN 2120–AA64

Airworthiness Directives; Raytheon Model DH.125, HS.125, BH.125, and BAe. 125 (U–125 and C–29A) Series Airplanes; Model Hawker 800, Hawker 800 (U–125A), Hawker 800XP, and Hawker 1000 Airplanes

AGENCY: Federal Aviation Administration, DOT.

ACTION: Final rule.

SUMMARY: This amendment adopts a new airworthiness directive (AD), applicable to certain Raytheon Model DH.125, HS.125, BH.125, and BAe. 125 (U–125 and C–29A) series airplanes; Model Hawker 800, Hawker 800 (U–125A), Hawker 800XP, and Hawker 1000 airplanes, that requires an inspection for cracking or corrosion of the cylinder head lugs of the main landing gear (MLG) actuator and follow-on/corrective actions. This amendment is prompted by reports of attachment lugs cracking at the actuator cylinder head. The actions specified by this AD are intended to prevent separation of the cylinder head lugs, which could prevent the MLG from extending and result in a partial gear-up landing.

DATES: Effective October 3, 2001.

The incorporation by reference of certain publications listed in the regulations is approved by the Director of the Federal Register as of October 3, 2001.

ADDRESSES: The service information referenced in this AD may be obtained from Raytheon Aircraft Company, Department 62, P.O. Box 85, Wichita, Kansas 67201–0085. This information may be examined at the Federal

Aviation Administration (FAA), Transport Airplane Directorate, Rules Docket, 1601 Lind Avenue, SW., Renton, Washington; or at the FAA, Wichita Aircraft Certification Office, 1801 Airport Road, Room 100, Wichita, Kansas; or at the Office of the Federal Register, 800 North Capitol Street, NW., suite 700, Washington, DC.

FOR FURTHER INFORMATION CONTACT: David Ostrodka, Aerospace Engineer, Airframe Branch, ACE–118W, FAA, Wichita Aircraft Certification Office, 1801 Airport Road, Room 100, Wichita, Kansas 67209; telephone (316) 946–4129; fax (316) 946–4407.

SUPPLEMENTARY INFORMATION: A proposal to amend part 39 of the Federal Aviation Regulations (14 CFR part 39) to include an airworthiness directive (AD) that is applicable to certain Raytheon Model DH.125, HS.125, BH.125, and BAe 125 (U–125 and C–29A) series airplanes, and Hawker 800, Hawker 800 (U–125A), Hawker 800XP, and Hawker 1000 airplanes was published in the **Federal Register** on June 5, 2001 (66 FR 30107). That action proposed to require an inspection to detect cracking or corrosion of the cylinder head lugs of the main landing gear (MLG) and follow-on/corrective actions.

Comments

Interested persons have been afforded an opportunity to participate in the making of this amendment. No comments were submitted in response to the proposal or the FAA's determination of the cost to the public.

Conclusion

The FAA has determined that air safety and the public interest require the adoption of the rule as proposed.

Cost Impact

There are approximately 1,000 airplanes of the affected design in the worldwide fleet. The FAA estimates that 650 airplanes of U.S. registry will be affected by this AD, that it will take approximately 20 work hours per airplane to accomplish the required inspection, and that the average labor rate is $60 per work hour. Based on these figures, the cost impact of the AD on U.S. operators is estimated to be $780,000, or $1,200 per airplane.

The cost impact figure discussed above is based on assumptions that no operator has yet accomplished any of the requirements of this AD action, and that no operator would accomplish those actions in the future if this AD were not adopted. The cost impact figures discussed in AD rulemaking actions represent only the time necessary to perform the specific actions actually required by the AD. These figures typically do not include incidental costs, such as the time required to gain access and close up, planning time, or time necessitated by other administrative actions.

Regulatory Impact

The regulations adopted herein will not have a substantial direct effect on the States, on the relationship between the national Government and the States, or on the distribution of power and responsibilities among the various levels of government. Therefore, it is determined that this final rule does not have federalism implications under Executive Order 13132.

For the reasons discussed above, I certify that this action (1) is not a ''significant regulatory action'' under Executive Order 12866; (2) is not a ''significant rule'' under DOT Regulatory Policies and Procedures (44 FR 11034, February 26, 1979); and (3) will not have a significant economic impact, positive or negative, on a substantial number of small entities under the criteria of the Regulatory Flexibility Act. A final evaluation has been prepared for this action and it is contained in the Rules Docket. A copy of it may be obtained from the Rules Docket at the location provided under the caption **ADDRESSES**.

List of Subjects in 14 CFR Part 39

Air transportation, Aircraft, Aviation safety, Incorporation by reference, Safety.

Adoption of the Amendment

Accordingly, pursuant to the authority delegated to me by the Administrator, the Federal Aviation Administration amends part 39 of the Federal Aviation Regulations (14 CFR part 39) as follows:

PART 39—AIRWORTHINESS DIRECTIVES

1. The authority citation for part 39 continues to read as follows:

Authority: 49 U.S.C. 106(g), 40113, 44701.

§ 39.13 [Amended]

2. Section 39.13 is amended by adding the following new airworthiness directive:

2001–17–26 Raytheon Aircraft Company: Amendment 39–12417. Docket 2000–NM–373–AD.

Applicability: Model DH.125, HS.125, BH.125, and BAe. 125 (U–125 and C–29A) series airplanes; Model Hawker 800, Hawker 800 (U–125A), Hawker 800XP, and Hawker 1000 airplanes; certificated in any category.

Note 1: This AD applies to each airplane identified in the preceding applicability provision, regardless of whether it has been modified, altered, or repaired in the area subject to the requirements of this AD. For airplanes that have been modified, altered, or repaired so that the performance of the requirements of this AD is affected, the owner/operator must request approval for an alternative method of compliance in accordance with paragraph (d) of this AD. The request should include an assessment of the effect of the modification, alteration, or repair on the unsafe condition addressed by this AD; and, if the unsafe condition has not been eliminated, the request should include specific proposed actions to address it.

Compliance: Required as indicated, unless accomplished previously.

To prevent separation of the cylinder head lugs, which could prevent the main landing gear (MLG) from extending and result in a partial gear-up landing, accomplish the following:

Inspection

(a) Perform an eddy current inspection of the actuator cylinder head lugs for cracking or corrosion per Raytheon Service Bulletin 32–3391, dated August 2000, at the time specified in paragraph (a)(1), (a)(2), (a)(3), or (a)(4) of this AD, as applicable.

(1) For actuator cylinder heads that have 3,000 or less total landings as of the effective date of this AD: Perform the eddy current inspection within 24 months after the effective date of this AD.

(2) For actuator cylinder heads that have 3,001 to 4,000 total landings as of the effective date of this AD: Perform the eddy current inspection within 6 months after the effective date of this AD.

(3) For actuator cylinder heads that have been in service for more than 7 years as of the effective date of this AD: Perform the eddy current inspection within 6 months of the effective date of this AD.

(4) For actuator cylinder heads that have 4,001 or more total landings as of the effective date of this AD: Perform the eddy current inspection within 10 landings after the effective date of this AD.

If No Cracking or Corrosion

(b) If no cracking or corrosion is found during the inspection required by paragraph (a) of this AD, before further flight, accomplish the follow-on actions (e.g., ''vibro-etching'' the MLG actuator data plate, painting a blue stripe on the actuator cylinder head to indicate 1/32 inch oversize bushings, replacing bushings, and applying corrosion protection to the lug bores), per Raytheon Service Bulletin 32–3391, dated August 2000.

If Any Cracking or Corrosion

(c) If any cracking or corrosion is found during the inspection required by paragraph (a) of this AD, before further flight, accomplish either of the actions specified in paragraph (c)(1) or (c)(2) of this AD, per Raytheon Service Bulletin 32–3391, dated August 2000.

(1) Replace the actuator of the MLG with a new or serviceable actuator, or

(2) Replace the actuator cylinder head with a new cylinder head.

Note 2: Raytheon Service Bulletin 32–3391, dated August 2000, references Precision Hydraulics Cylinder Maintenance Manual (CMM) 32–30–1105 as an additional source of service information.

Alternative Methods of Compliance

(d) An alternative method of compliance or adjustment of the compliance time that provides an acceptable level of safety may be used if approved by the Manager, Wichita Aircraft Certification Office (ACO), FAA. Operators shall submit their requests through an appropriate FAA Principal Maintenance Inspector, who may add comments and then send it to the Manager, Wichita ACO.

Note 3: Information concerning the existence of approved alternative methods of compliance with this AD, if any, may be obtained from the Wichita ACO.

Special Flight Permit

(e) Special flight permits may be issued in accordance with sections 21.197 and 21.199 of the Federal Aviation Regulations (14 CFR 21.197 and 21.199) to operate the airplane to a location where the requirements of this AD can be accomplished.

Incorporation by Reference

(f) The actions shall be done in accordance with Raytheon Service Bulletin 32–3391, dated August 2000. This incorporation by reference was approved by the Director of the Federal Register in accordance with 5 U.S.C. 552(a) and 1 CFR part 51. Copies may be obtained from Raytheon Aircraft Company, Department 62, P.O. Box 85, Wichita, Kansas 67201–0085. Copies may be inspected at the FAA, Transport Airplane Directorate, 1601 Lind Avenue, SW., Renton, Washington; or at the FAA, Wichita Aircraft Certification Office, 1801 Airport Road, Room 100, Wichita, Kansas; or at the Office of the Federal Register, 800 North Capitol Street, NW., suite 700, Washington, DC.

Effective Date

(g) This amendment becomes effective on October 3, 2001.

Issued in Renton, Washington, on August 20, 2001.

Vi L. Lipski,

Manager, Transport Airplane Directorate, Aircraft Certification Service.

[FR Doc. 01–21491 Filed 8–28–01; 8:45 am]

BILLING CODE 4910–13–P

DEPARTMENT OF TRANSPORTATION

Federal Aviation Administration

14 CFR Part 39

[Docket No. 2001–NM–261–AD; Amendment 39–12418; AD 2001–17–27]

RIN 2120–AA64

Airworthiness Directives; Israel Aircraft Industries, Ltd., Model Astra SPX and 1125 Westwind Astra Series Airplanes

AGENCY: Federal Aviation Administration, DOT.

ACTION: Final rule; request for comments.

SUMMARY: This amendment adopts a new airworthiness directive (AD) that is applicable to certain Israel Aircraft Industries, Ltd., Model Astra SPX and 1125 Westwind Astra series airplanes. This action requires one-time detailed visual and eddy current inspections for cracking of the drag brace on the nose landing gear, and replacement of the drag brace, if necessary. This action is necessary to prevent failure of the nose landing gear. This action is intended to address the identified unsafe condition.

DATES: Effective September 13, 2001.

The incorporation by reference of certain publications listed in the regulations is approved by the Director of the Federal Register as of September 13, 2001.

Comments for inclusion in the Rules Docket must be received on or before September 28, 2001.

ADDRESSES: Submit comments in triplicate to the Federal Aviation Administration (FAA), Transport Airplane Directorate, ANM–114, Attention: Rules Docket No. 2001–NM–261–AD, 1601 Lind Avenue, SW., Renton, Washington 98055–4056. Comments may be inspected at this location between 9 a.m. and 3 p.m., Monday through Friday, except Federal holidays. Comments may be submitted via fax to (425) 227–1232. Comments may also be sent via the Internet using the following address: *9-anm-iarcomment@faa.gov*. Comments sent via fax or the Internet must contain ''Docket No. 2001–NM–261–AD'' in the subject line and need not be submitted in triplicate. Comments sent via the Internet as attached electronic files must be formatted in Microsoft Word 97 for Windows or ASCII text.

The service information referenced in this AD may be obtained from Galaxy Aerospace Corporation, One Galaxy Way, Fort Worth Alliance Airport, Fort Worth, Texas 76177. This information may be examined at the FAA, Transport Airplane Directorate, 1601 Lind Avenue, SW., Renton, Washington; or at the Office of the Federal Register, 800 North Capitol Street, NW., suite 700, Washington, DC.

FOR FURTHER INFORMATION CONTACT: Dan Rodina, Aerospace Engineer, International Branch, ANM–116, FAA, Transport Airplane Directorate, 1601 Lind Avenue, SW., Renton, Washington 98055–4056; telephone (425) 227–2125; fax (425) 227–1149.

SUPPLEMENTARY INFORMATION: The Civil Aviation Administration of Israel (CAAI), which is the airworthiness authority for Israel, notified the FAA that an unsafe condition may exist on certain Israel Aircraft Industries, Ltd., Model Astra SPX and 1125 Westwind Astra series airplanes. The CAAI advises that fatigue cracking has been found on drag braces with part numbers 25W272003–501 through 25W272003–507 inclusive installed on the nose landing gear. This condition, if not corrected, could result in failure of the nose landing gear.

Explanation of Relevant Service Information

Israel Aircraft Industries has issued Astra Alert Service Bulletin 1125–32A–095, dated December 4, 2000. The service bulletin describes procedures for one-time detailed visual and eddy current inspections for cracking of the upper radius of the drag brace on the nose landing gear, and replacement of the drag brace, if necessary. The area to be inspected is the fillet between the trunnion axis and the body of the drag brace. Accomplishment of the actions specified in the service bulletin is intended to adequately address the identified unsafe condition. The CAAI classified this service bulletin as mandatory and issued Israeli airworthiness directive 32–00–12–14, dated July 1, 2001, in order to assure the continued airworthiness of these airplanes in Israel.

The Israeli airworthiness directive notes that the drag brace on the nose landing gear is subject to repetitive detailed visual and eddy current inspections per Chapters 5 and 32 of the Astra Maintenance Manual, including Temporary Revision 32–7, dated November 28, 2000, or a later revision. Such inspections are intended to ensure that any cracking is detected in a timely manner.

FAA's Determination

Investigation of a nose landing gear overhaul facility has led to the conclusion that a procedural and

inspection fault could result due to previous installation of a drag brace that could be cracked. To ensure that such drag braces were not installed, we are requiring an inspection of the drag brace within 25 flight hours after the effective date of this AD, unless accomplished within the last 250 flight hours before the effective date of this AD.

FAA's Conclusions

These airplane models are manufactured in Israel and are type certificated for operation in the United States under the provisions of section 21.29 of the Federal Aviation Regulations (14 CFR 21.29) and the applicable bilateral airworthiness agreement. Pursuant to this bilateral airworthiness agreement, the CAAI has kept the FAA informed of the situation described above. The FAA has examined the findings of the CAAI, reviewed all available information, and determined that AD action is necessary for products of this type design that are certificated for operation in the United States.

Explanation of Requirements of Rule

Since an unsafe condition has been identified that is likely to exist or develop on other airplanes of the same type design registered in the United States, this AD is being issued to prevent failure of the nose landing gear. This AD requires accomplishment of the actions specified in the service bulletin described previously, except as discussed below.

Difference Between This AD, the Service Bulletin, and the Foreign AD

While the effectivity statement of the service bulletin includes only Model 1125 Astra series airplanes with serial numbers 004 through 039 inclusive, the foreign airworthiness directive states that any Model 1125 Astra and Astra SPX series airplane with a serial number higher than 039 on which the nose landing gear or the drag brace of the nose landing gear has been replaced must be checked to determine whether it is subject to this AD. Based on this recommendation in the foreign airworthiness directive and our examination of the findings of the CAAI, this AD requires inspection of all Model Astra SPX and 1125 Westwind Astra series airplanes with a drag brace having part numbers 25W272003–501 through 25W272003–507 inclusive installed on the nose landing gear.

Determination of Rule's Effective Date

Since a situation exists that requires the immediate adoption of this regulation, it is found that notice and opportunity for prior public comment hereon are impracticable, and that good cause exists for making this amendment effective in less than 30 days.

Comments Invited

Although this action is in the form of a final rule that involves requirements affecting flight safety and, thus, was not preceded by notice and an opportunity for public comment, comments are invited on this rule. Interested persons are invited to comment on this rule by submitting such written data, views, or arguments as they may desire. Communications shall identify the Rules Docket number and be submitted in triplicate to the address specified under the caption **ADDRESSES**. All communications received on or before the closing date for comments will be considered, and this rule may be amended in light of the comments received. Factual information that supports the commenter's ideas and suggestions is extremely helpful in evaluating the effectiveness of the AD action and determining whether additional rulemaking action would be needed.

Submit comments using the following format:

- Organize comments issue-by-issue. For example, discuss a request to change the compliance time and a request to change the service bulletin reference as two separate issues.
- For each issue, state what specific change to the AD is being requested.
- Include justification (e.g., reasons or data) for each request.

Comments are specifically invited on the overall regulatory, economic, environmental, and energy aspects of the rule that might suggest a need to modify the rule. All comments submitted will be available, both before and after the closing date for comments, in the Rules Docket for examination by interested persons. A report that summarizes each FAA-public contact concerned with the substance of this AD will be filed in the Rules Docket.

Commenters wishing the FAA to acknowledge receipt of their comments submitted in response to this rule must submit a self-addressed, stamped postcard on which the following statement is made: ''Comments to Docket Number 2001–NM–261–AD.'' The postcard will be date-stamped and returned to the commenter.

Regulatory Impact

The regulations adopted herein will not have a substantial direct effect on the States, on the relationship between the national Government and the States, or on the distribution of power and responsibilities among the various levels of government. Therefore, it is determined that this final rule does not have federalism implications under Executive Order 13132.

The FAA has determined that this regulation is an emergency regulation that must be issued immediately to correct an unsafe condition in aircraft, and that it is not a ''significant regulatory action'' under Executive Order 12866. It has been determined further that this action involves an emergency regulation under DOT Regulatory Policies and Procedures (44 FR 11034, February 26, 1979). If it is determined that this emergency regulation otherwise would be significant under DOT Regulatory Policies and Procedures, a final regulatory evaluation will be prepared and placed in the Rules Docket. A copy of it, if filed, may be obtained from the Rules Docket at the location provided under the caption **ADDRESSES**.

List of Subjects in 14 CFR Part 39

Air transportation, Aircraft, Aviation safety, Incorporation by reference, Safety.

Adoption of the Amendment

Accordingly, pursuant to the authority delegated to me by the Administrator, the Federal Aviation Administration amends part 39 of the Federal Aviation Regulations (14 CFR part 39) as follows:

PART 39—AIRWORTHINESS DIRECTIVES

1. The authority citation for part 39 continues to read as follows:

Authority: 49 U.S.C. 106(g), 40113, 44701.

§ 39.13 [Amended]

2. Section 39.13 is amended by adding the following new airworthiness directive:

2001–17–27 Israel Aircraft Industries, LTD.: Amendment 39–12418. Docket 2001–NM–261–AD.

Applicability: Model Astra SPX and 1125 Westwind Astra series airplanes with a drag brace having part numbers 25W272003–501 through 25W272003–507 inclusive installed on the nose landing gear, certificated in any category.

Note 1: This AD applies to each airplane identified in the preceding applicability provision, regardless of whether it has been modified, altered, or repaired in the area subject to the requirements of this AD. For airplanes that have been modified, altered, or repaired so that the performance of the requirements of this AD is affected, the owner/operator must request approval for an alternative method of compliance in accordance with paragraph (c) of this AD.

The request should include an assessment of the effect of the modification, alteration, or repair on the unsafe condition addressed by this AD; and, if the unsafe condition has not been eliminated, the request should include specific proposed actions to address it.

Compliance: Required as indicated, unless accomplished previously.

To prevent failure of the nose landing gear, accomplish the following:

One-Time Inspections

(a) Within 25 flight hours after the effective date of this AD, unless accomplished within the last 250 flight hours before the effective date of this AD: Perform one-time detailed visual and eddy current inspections for cracking of the drag brace on the nose landing gear, according to Astra (Israel Aircraft Industries) Alert Service Bulletin 1125–32A–095, dated December 4, 2000.

Note 2: For the purposes of this AD, a detailed visual inspection is defined as: ''An intensive visual examination of a specific structural area, system, installation, or assembly to detect damage, failure, or irregularity. Available lighting is normally supplemented with a direct source of good lighting at intensity deemed appropriate by the inspector. Inspection aids such as mirror, magnifying lenses, etc., may be used. Surface cleaning and elaborate access procedures may be required.''

Note 3: The drag brace on the nose landing gear is subject to repetitive detailed visual and eddy current inspections per Chapters 5 and 32 of the Astra Maintenance Manual, including Temporary Revision 32–7, dated November 28, 2000.

Replacement

(b) If any cracking is found during any inspection required by paragraph (a) of this AD, before further flight, replace the drag brace with a new, improved drag brace, according to Astra (Israel Aircraft Industries) Alert Service Bulletin 1125–32A–095, dated December 4, 2000.

Alternative Methods of Compliance

(c) An alternative method of compliance or adjustment of the compliance time that provides an acceptable level of safety may be used if approved by the Manager, International Branch, ANM–116, Transport Airplane Directorate, FAA. Operators shall submit their requests through an appropriate FAA Principal Maintenance Inspector, who may add comments and then send it to the Manager, International Branch, ANM–116.

Note 4: Information concerning the existence of approved alternative methods of compliance with this AD, if any, may be obtained from the International Branch, ANM–116.

Special Flight Permits

(d) Special flight permits may be issued in accordance with sections 21.197 and 21.199 of the Federal Aviation Regulations (14 CFR 21.197 and 21.199) to operate the airplane to a location where the requirements of this AD can be accomplished.

Incorporation by Reference

(e) The actions shall be done in accordance with Astra (Israel Aircraft Industries) Alert Service Bulletin 1125–32A–095, dated December 4, 2000. This incorporation by reference was approved by the Director of the Federal Register in accordance with 5 U.S.C. 552(a) and 1 CFR part 51. Copies may be obtained from Galaxy Aerospace Corporation, One Galaxy Way, Fort Worth Alliance Airport, Fort Worth, Texas 76177. Copies may be inspected at the FAA, Transport Airplane Directorate, 1601 Lind Avenue, SW., Renton, Washington; or at the Office of the Federal Register, 800 North Capitol Street, NW., suite 700, Washington, DC.

Note 5: The subject of this AD is addressed in Israeli airworthiness directive 32–00–12–14, dated July 1, 2001.

Effective Date

(f) This amendment becomes effective on September 13, 2001.

Issued in Renton, Washington, on August 20, 2001.

Vi L. Lipski,

Manager, Transport Airplane Directorate, Aircraft Certification Service.

[FR Doc. 01–21489 Filed 8–28–01; 8:45 am]

BILLING CODE 4910–13–U

DEPARTMENT OF TRANSPORTATION

Federal Aviation Administration

14 CFR Part 39

[Docket No. 2001–NM–258–AD; Amendment 39–12419; AD 2001–17–28]

RIN 2120–AA64

Airworthiness Directives; Boeing Model 767 Series Airplanes

AGENCY: Federal Aviation Administration, DOT.

ACTION: Final rule; request for comments.

SUMMARY: This amendment adopts a new airworthiness directive (AD) that is applicable to all Boeing Model 767 series airplanes. This action requires a one-time inspection to detect abrasion damage and installation discrepancies of the wire bundles located below the P37 panel, and corrective action, if necessary. This action is necessary to detect and correct such damage and other discrepancies, which could result in arcing to structure and consequent fire or loss of function of affected systems. This action is intended to address the identified unsafe condition.

DATES: Effective September 13, 2001.

The incorporation by reference of certain publications listed in the regulations is approved by the Director of the Federal Register as of September 13, 2001.

Comments for inclusion in the Rules Docket must be received on or before October 29, 2001.

ADDRESSES: Submit comments in triplicate to the Federal Aviation Administration (FAA), Transport Airplane Directorate, ANM–114, Attention: Rules Docket No. 2001–NM–258–AD, 1601 Lind Avenue, SW., Renton, Washington 98055–4056. Comments may be inspected at this location between 9:00 a.m. and 3:00 p.m., Monday through Friday, except Federal holidays. Comments may be submitted via fax to (425) 227–1232. Comments may also be sent via the Internet using the following address: *9-anm-iarcomment@faa.gov.* Comments sent via fax or the Internet must contain ''Docket No. 2001–NM–258–AD'' in the subject line and need not be submitted in triplicate. Comments sent via the Internet as attached electronics files must be formatted in Microsoft Word 97 for Windows or ASCII text.

The service information referenced in this AD may be obtained from Boeing Commercial Airplane Group, P.O. Box 3707, Seattle, Washington 98124–2207. This information may be examined at the FAA, Transport Airplane Directorate, 1601 Lind Avenue, SW., Renton, Washington; or at the Office of the Federal Register, 800 North Capitol Street, NW., suite 700, Washington, DC.

FOR FURTHER INFORMATION CONTACT: Elias Natsiopoulos, Aerospace Engineer, Systems and Equipment Branch, ANM–130S, FAA, Seattle Aircraft Certification Office, 1601 Lind Avenue, SW., Renton, Washington 98055–4056; telephone (425) 227–1279; fax (425) 227–1181.

SUPPLEMENTARY INFORMATION: The FAA has received a report of a fire in a Boeing Model 767–300 series airplane during routine maintenance. As the maintenance crew attempted to apply external electrical power to the airplane, fire erupted in the forward electrical/electronics bay, below the P37 miscellaneous electrical equipment panel. The source of the fire was traced to chafing and subsequent arcing of power wires belonging to electrical power wire bundle W298, which is routed from the P32 R generator power panel to the P37 panel. A stringer and a web were severely damaged by the electrical arcing and had to be replaced. Some of the wires were severed, and the insulation blanket was burned. It was discovered that the routing of the bundle under the blanket violates wire bundle installation and routing requirements.

An investigation and inspection of other Model 767 series airplanes in that operator's fleet revealed similar findings

at the same location, including chafed wires, loose or missing cable clamps, and other installation anomalies. The manufacturer has received no reports of similar incidents experienced by other operators of the affected airplanes.

Abrasion damage and installation discrepancies of the wire bundles located below the P37 panel could result in arcing to structure and consequent fire or loss of function of affected systems.

Explanation of Relevant Service Information

The FAA has reviewed and approved Boeing Alert Service Bulletins 767–24A0134 (for Model 767–200 and –300 series airplanes) and 767–24A0135 (for Model 767–400ER series airplanes), both dated March 15, 2001. The alert service bulletins describe procedures for:

- A one-time inspection to detect abrasion damage and installation discrepancies (including missing standoffs; missing, chafed, or loose cable clamps; chafed grommets; and wire bundles located beneath an insulation blanket) of the wire bundles W232, W298, and W2130; and the wiring and grommet at the S–29R intercostal penetration;
- Repair or replacement of any damaged wires or worn components;
- Installation of protective sleeving over the wire bundles; and
- Relocation of the wiring support standoff on the S–29R intercostal to provide more rigid support and adequate clearance between the bundle and the structural edges.

Accomplishment of the actions specified in the alert service bulletins is intended to adequately address the identified unsafe condition.

Explanation of the Requirements of the Rule

Since an unsafe condition has been identified that is likely to exist or develop on other airplanes of the same type design, this AD is being issued to detect and correct abrasion damage and installation discrepancies of the wire bundles located below the P37 panel, which could result in arcing to structure and consequent fire or loss of function of affected systems. This AD requires accomplishment of the actions specified in the alert service bulletins described previously, except as discussed below.

Differences Between AD and Alert Service Bulletins

The alert service bulletins recommend accomplishment of the actions ''at the earliest opportunity when parts, manpower and facilities are available.'' This AD requires compliance within 90 days. The FAA has determined that a 90-day compliance time represents the maximum interval of time allowable for affected airplanes to continue to safely operate before the required actions are accomplished. Maintenance schedules vary from operator to operator; therefore, the required compliance time will ensure that the actions will be accomplished during that maximum interval.

In addition, the alert service bulletins identify airplanes having certain serial numbers in the effectivity. However, this AD is applicable to all Boeing Model 767 series airplanes to ensure that appropriate actions are taken to address the identified unsafe condition for the fleet.

Determination of Rule's Effective Date

Since a situation exists that requires the immediate adoption of this regulation, it is found that notice and opportunity for public comment hereon are impracticable, and that good cause exists for making this amendment effective in less than 30 days.

Comments Invited

Although this action is in the form of a final rule that involves requirements affecting flight safety and, thus, was not preceded by notice and an opportunity for public comment, comments are invited on this rule. Interested persons are invited to comment on this rule by submitting such written data, views, or arguments as they may desire. Communications shall identify the Rules Docket number and be submitted in triplicate to the address specified under the caption **ADDRESSES**. All communications received on or before the closing date for comments will be considered, and this rule may be amended in light of the comments received. Factual information that supports the commenter's ideas and suggestions is extremely helpful in evaluating the effectiveness of the AD action and determining whether additional rulemaking action would be needed.

Submit comments using the following format:

- Organize comments issue-by-issue. For example, discuss a request to change the compliance time and a request to change the service bulletin reference as two separate issues.
- For each issue, state what specific change to the AD is being requested.
- Include justification (e.g., reasons for data) for each request.

Comments are specifically invited on the overall regulatory, economic, environmental, and energy aspects of the rule that might suggest a need to modify the rule. All comments submitted will be available, both before and after the closing date for comments, in the Rules Docket for examination by interested persons. A report that summarizes each FAA-public contact concerned with the substance of this AD will be filed in the Rules Docket.

Commenters wishing the FAA to acknowledge receipt of their comments submitted in response to this rule must submit a self-addressed, stamped postcard on which the following statement is made: ''Comments to Docket 2001–NM–258–AD.'' The postcard will be date stamped and returned to the commenter.

Regulatory Impact

The regulations adopted herein will not have a substantial direct effect on the States, on the relationship between the national Government and the States, or on the distribution of power and responsibilities among the various levels of government. Therefore, it is determined that this final rule does not have federalism implications under Executive Order 13132.

The FAA has determined that this regulation is an emergency regulation that must be issued immediately to correct an unsafe condition in aircraft, and that it is not a ''significant regulatory action'' under Executive Order 12866. It has been determined further that this action involves an emergency regulation under DOT Regulatory Policies and Procedures (44 FR 11034, February 26, 1979). If it is determined that this emergency regulation otherwise would be significant under DOT Regulatory Policies and Procedures, a final regulatory evaluation will be prepared and placed in the Rules Docket. A Copy of it, if filed, may be obtained from the Rules Docket at the location provided under the caption **ADDRESSES**.

List of Subjects in 14 CFR Part 39

Air transportation, Aircraft, Aviation safety, Incorporation by reference, Safety.

Adoption of the Amendment

Accordingly, pursuant to the authority delegated to me by the Administrator, the Federal Aviation Administration amends part 39 of the Federal Aviation Regulations (14 CFR part 39) as follows:

PART 39—AIRWORTHINESS DIRECTIVES

1. The authority citation for part 39 continues to read as follows:

Authority: 49 U.S.C. 106(g), 40113, 44701.

§ 39.13 [Amended]

2. Section 39.13 is amended by adding the following new airworthiness directive:

2001–17–28 Boeing: Amendment 39–12419. Docket 2001–NM–258–AD.

Applicability: All Model 767 series airplanes, certificated in any category.

Note 1: The AD applies to each airplane identified in the preceding applicability provision, regardless of whether it has been modified, altered, or repaired in the area subject to the requirements of this AD. For airplanes that have been modified, altered, or repaired so that the performance of the requirements of this AD is affected, the owner/operator must request approval for an alternative method of compliance in accordance with paragraph (b) of this AD. The request should include an assessment of the effect of the modification, alteration, or repair on the unsafe condition addressed by this AD; and, if the unsafe condition has not been eliminated, the request should include specific proposed actions to address it.

Compliance: Required as indicated, unless accomplished previously.

To detect and correct abrasion damage and installation discrepancies of the wire bundles located below the P37 panel, which could result in arcing to structure and consequent fire or loss of function of affected systems, accomplish the following:

Inspection

(a) Within 90 days after the effective date of this AD: Do the actions required by paragraphs (a)(1), (a)(2), and (a)(3) of this AD, in accordance with Boeing Alert Service Bulletin 767–24A0134 (for Model 767–200 and –300 series airplanes) and 767–24A0135 (for Model 767–400ER series airplanes), both dated March 15, 2001.

(1) Perform a one-time detailed visual inspection of the wire bundles located below the P37 panel to detect abrasion damage and wire installation discrepancies (including missing standoffs; missing, chafed, or loose cable clamps; chafed grommets; and wire bundles located beneath an insulation blanket). If any damage or other discrepancy is found, prior to further flight, perform corrective action in accordance with the applicable alert service bulletin.

(2) Relocate the wire support standoff.

(3) Install protective sleeving over the wire bundles.

Note. 2: For the purposes of this AD, a detailed visual inspection is defined as: ''An intensive visual examination of a specific structural area, system, installation, or assembly to detect damage, failure, or irregularity. Available lighting is normally supplemented with a direct source of good lighting at intensity deemed appropriate by the inspector. Inspection aids such as mirror, magnifying lenses, etc., may be used. Surface cleaning and elaborate access procedures may be required.''

Alternative Methods of Compliance

(b) An alternative method of compliance or adjustment of the compliance time that provides an acceptable level of safety may be used if approved by the Manager, Seattle Aircraft Certification Office (ACO), FAA. Operators shall submit their requests through an appropriate FAA Principal Maintenance Inspector, who may add comments and then send it to the Manager, Seattle ACO.

Note 3: Information concerning the existence of approved alternative methods of compliance with this AD, if any, may be obtained from the Seattle ACO.

Special Flight Patterns

(c) Special flight permits may be issued in accordance with sections 21.197 and 21.199 of the Federal Aviation Regulations (14 CFR 21.197 and 21.199) to operate the airplane to a location where the requirements of this AD can be accomplished.

Incorporation by Reference

(d) The actions shall be done in accordance with Boeing Alert Service Bulletin 767–24A0134, dated March 15, 2001; or Boeing Alert Service Bulletin 767–24A0135, dated March 15, 2001; as applicable. This incorporation by reference was approved by the Director of the Federal Register in accordance with 5 U.S.C. 552(a) and 1 CFR part 51. Copies may be obtained from Boeing Commercial Airplane Group, P.O. Box 3707, Seattle, Washington 98124–2207. Copies may be inspected at the FAA, Transport Airplane Directorate, 1601 Lind Avenue, SW., Renton, Washington; or at the Office of the Federal Register, 800 North Capitol Street, NW., suite 700, Washington, DC.

Effective Date

(e) This amendment becomes effective on September 13, 2001.

Issued in Renton, Washington, on August 20, 2001.

Vi L. Lipski,

Manager, Transport Airplane Directorate, Aircraft Certification Service.

[FR Doc. 01–21488 Filed 8–28–01; 8:45 am]

BILLING CODE 4910–13–M

DEPARTMENT OF TRANSPORTATION

Federal Aviation Administration

14 CFR Part 39

[Docket No. 2001–NM–263–AD; Amendment 39–12420; AD 2001–17–29]

RIN 2120–AA64

Airworthiness Directives; Airbus Model A300 B2 and B4 Series Airplanes, and Model A300 B4–600, B4–600R, and F4–600R (Collectively Called A300–600) Series Airplanes

AGENCY: Federal Aviation Administration, DOT.

ACTION: Final rule; request for comments.

SUMMARY: This amendment adopts a new airworthiness directive (AD) that is applicable to certain Airbus Model A300 B2 and B4 series airplanes, and certain Model A300 B4–600, B4–600R, and F4–600R (collectively called A300–600) series airplanes. This action requires a one-time inspection to detect cracks in gear rib 5 (left and right) of the main landing gear (MLG) attachment fittings at the lower flange and vertical web, and repair if necessary. This action is necessary to detect and correct fatigue cracking of the MLG attachment fittings, which could result in reduced structural integrity of the airplane. This action is intended to address the identified unsafe condition.

DATES: Effective September 13, 2001.

The incorporation by reference of certain publications listed in the regulations is approved by the Director of the Federal Register as of September 13, 2001.

Comments for inclusion in the Rules Docket must be received on or before September 28, 2001.

ADDRESSES: Submit comments in triplicate to the Federal Aviation Administration (FAA), Transport Airplane Directorate, ANM–114, Attention: Rules Docket No. 2001–NM–263–AD, 1601 Lind Avenue, SW., Renton, Washington 98055–4056. Comments may be inspected at this location between 9:00 a.m. and 3:00 p.m., Monday through Friday, except Federal holidays. Comments may be submitted via fax to (425) 227–1232. Comments may also be sent via the Internet using the following address: *9-anm-iarcomment@faa.gov.* Comments sent via fax or the Internet must contain ''Docket No. 2001–NM–263–AD'' in the subject line and need not be submitted in triplicate. Comments sent via the Internet as attached electronic files must be formatted in Microsoft Word 97 for Windows or ASCII text.

The service information referenced in this AD may be obtained from Airbus Industrie, 1 Rond Point Maurice Bellonte, 31707 Blagnac Cedex, France. This information may be examined at the FAA, Transport Airplane Directorate, 1601 Lind Avenue, SW., Renton, Washington; or at the Office of the Federal Register, 800 North Capitol Street, NW., suite 700, Washington, DC.

FOR FURTHER INFORMATION CONTACT: Dan Rodina, Aerospace Engineer, International Branch, ANM–116, FAA, Transport Airplane Directorate, 1601 Lind Avenue, SW., Renton, Washington 98055–4056; telephone (425) 227–2125; fax (425) 227–1149.

SUPPLEMENTARY INFORMATION: The Direction Générale de l'Aviation Civile (DGAC), which is the airworthiness authority for France, recently notified

the FAA that an unsafe condition may exist on certain Airbus Model A300 B2 and B4 series airplanes, and certain Model A300 B4–600, B4–600R, and F4–600R (collectively called A300–600) series airplanes. The DGAC advises that an operator reported a 450-mm (18-inch) crack in the area of the attachment fitting of the main landing gear (MLG). The crack was found during a routine inspection in the area of the lower flange of gear rib 5 between the retraction jack attachment lug and the rear spar. The crack was visible at the edge of the lower flange between holes 48 and 49; it extended through the hole 47 spotfacing and up into the web at 45 degrees to the forward attachment flange on the rear spar. The cracking occurred significantly earlier than predicted by analysis, when the airplane had accumulated only 9,605 total flight cycles and 24,230 total flight hours. Fatigue cracking of the MLG attachment fittings, if not corrected, could result in reduced structural integrity of the airplane.

Related Rulemaking

In February 2000, the FAA issued AD 2000–05–07, amendment 39–11616 (65 FR 12077, March 8, 2000). That AD currently requires repetitive inspections in the area where the 450-mm crack was found, and affects the same airplanes affected by this new AD. The compliance time for the initial inspection required by AD 2000–05–07 is 20,000 total flight cycles.

Explanation of Relevant Service Information

Airbus has issued All Operators Telexes (AOTs) A300–57A0239 (for Model A300 B2 and B4 series airplanes) and A300–600–57A6094 (for Model A300–600 series airplanes), both dated August 2, 2001. The AOTs describe procedures for a one-time detailed visual inspection to detect cracking in gear rib 5 (left and right) of the MLG attachment fittings at the lower flange and vertical web. The DGAC classified these AOTs as mandatory and issued French telegraphic airworthiness directive T2001–364(B), dated August 2, 2001, to ensure the continued airworthiness of these airplanes in France.

The area of inspection described in the AOTs is similar to that described in Airbus Service Bulletins A300–57A0234 (for Model A300 B2 and A300 B4 series airplanes) and A300–57A6087 (for Model A300–600 series airplanes). Those service bulletins are cited as the appropriate sources of service information for accomplishment of the inspections and repair required by AD 2000–05–07. The AOTs differ from the service bulletins in that the AOTs specify only a one-time inspection, shorten the recommended compliance time, and do not specify accomplishment of the additional, high frequency eddy current inspection. The AOTs refer to the service bulletins for repair instructions.

FAA's Conclusions

These airplane models are manufactured in France and are type certificated for operation in the United States under the provisions of § 21.29 of the Federal Aviation Regulations (14 CFR 21.29) and the applicable bilateral airworthiness agreement. Pursuant to this bilateral airworthiness agreement, the DGAC has kept the FAA informed of the situation described above. The FAA has examined the findings of the DGAC, reviewed all available information, and determined that AD action is necessary for products of this type design that are certificated for operation in the United States.

Explanation of Requirements of Rule

Since an unsafe condition has been identified that is likely to exist or develop on other airplanes of the same type design registered in the United States, this AD is being issued to prevent fatigue cracking of the MLG attachment fittings, which could result in reduced structural integrity of the airplane. This AD requires accomplishment of the actions specified in the AOTs described previously, except as discussed below.

Difference Between AD and AOTs

The AOTs refer to Airbus Service Bulletins A300–57A0234 and A300–57A6087 for repair instructions. Those service bulletins specify that the manufacturer may be contacted for disposition of certain repair conditions. However, this AD requires the repair of those conditions to be accomplished in accordance with a method approved by either the FAA, or the DGAC (or its delegated agent). In light of the type of repair required to address the identified unsafe condition, and in consonance with existing bilateral airworthiness agreements, the FAA has determined that, for this AD, a repair approved by either the FAA or the DGAC is acceptable for compliance with this AD.

Interim Action

This is considered to be interim action. The manufacturer is gathering data that will enable it to obtain better insight into the nature, cause, and extent of the cracking, and eventually to develop final action to address the unsafe condition. Once final action has been identified, the FAA may consider further rulemaking.

Determination of Rule's Effective Date

Since a situation exists that requires the immediate adoption of this regulation, it is found that notice and opportunity for prior public comment hereon are impracticable, and that good cause exists for making this amendment effective in less than 30 days.

Comments Invited

Although this action is in the form of a final rule that involves requirements affecting flight safety and, thus, was not preceded by notice and an opportunity for public comment, comments are invited on this rule. Interested persons are invited to comment on this rule by submitting such written data, views, or arguments as they may desire. Communications shall identify the Rules Docket number and be submitted in triplicate to the address specified under the caption **ADDRESSES.** All communications received on or before the closing date for comments will be considered, and this rule may be amended in light of the comments received. Factual information that supports the commenter's ideas and suggestions is extremely helpful in evaluating the effectiveness of the AD action and determining whether additional rulemaking action would be needed.

Submit comments using the following format:

- Organize comments issue-by-issue. For example, discuss a request to change the compliance time and a request to change the service bulletin reference as two separate issues.
- For each issue, state what specific change to the AD is being requested.
- Include justification (e.g., reasons or data) for each request.

Comments are specifically invited on the overall regulatory, economic, environmental, and energy aspects of the rule that might suggest a need to modify the rule. All comments submitted will be available, both before and after the closing date for comments, in the Rules Docket for examination by interested persons. A report that summarizes each FAA-public contact concerned with the substance of this AD will be filed in the Rules Docket.

Commenters wishing the FAA to acknowledge receipt of their comments submitted in response to this rule must submit a self-addressed, stamped postcard on which the following statement is made: ''Comments to Docket 2001–NM–263–AD.'' The

postcard will be date stamped and returned to the commenter.

Regulatory Impact

The regulations adopted herein will not have a substantial direct effect on the States, on the relationship between the national Government and the States, or on the distribution of power and responsibilities among the various levels of government. Therefore, it is determined that this final rule does not have federalism implications under Executive Order 13132.

The FAA has determined that this regulation is an emergency regulation that must be issued immediately to correct an unsafe condition in aircraft, and that it is not a ''significant regulatory action'' under Executive Order 12866. It has been determined further that this action involves an emergency regulation under DOT Regulatory Policies and Procedures (44 FR 11034, February 26, 1979). If it is determined that this emergency regulation otherwise would be significant under DOT Regulatory Policies and Procedures, a final regulatory evaluation will be prepared and placed in the Rules Docket. A copy of it, if filed, may be obtained from the Rules Docket at the location provided under the caption **ADDRESSES.**

List of Subjects in 14 CFR Part 39

Air transportation, Aircraft, Aviation safety, Incorporation by reference, Safety.

Adoption of the Amendment

Accordingly, pursuant to the authority delegated to me by the Administrator, the Federal Aviation Administration amends part 39 of the Federal Aviation Regulations (14 CFR part 39) as follows:

PART 39—AIRWORTHINESS DIRECTIVES

1. The authority citation for part 39 continues to read as follows:

Authority: 49 U.S.C. 106(g), 40113, 44701.

§ 39.13 [Amended]

2. Section 39.13 is amended by adding the following new airworthiness directive:

2001–17–29 Airbus Industrie: Amendment 39–12420. Docket 2001–NM–263–AD.

Applicability: The following airplanes, certificated in any category:

—Model A300 B2 and B4 series airplanes, except those modified by Airbus Modification 11932 (reference Airbus Service Bulletin A300–57–0235, Revision 01, including Appendix 01, dated February 1, 1999; or earlier version); and

—Model A300 B4–600, B4–600R, and F4–600R (collectively called A300–600) series airplanes; manufacturer serial numbers (MSNs) up to and including MSN 787; except those modified by Airbus Modification 11932 (reference Airbus Service Bulletin A300–57–6088, Revision 01, including Appendix 01, dated February 1, 1999; or earlier version).

Note 1: This AD applies to each airplane identified in the preceding applicability provision, regardless of whether it has been otherwise modified, altered, or repaired in the area subject to the requirements of this AD. For airplanes that have been modified, altered, or repaired so that the performance of the requirements of this AD is affected, the owner/operator must request approval for an alternative method of compliance in accordance with paragraph (b) of this AD. The request should include an assessment of the effect of the modification, alteration, or repair on the unsafe condition addressed by this AD; and, if the unsafe condition has not been eliminated, the request should include specific proposed actions to address it.

Compliance: Required as indicated, unless accomplished previously.

To prevent fatigue cracking of the attachment fittings of the main landing gear (MLG), which could result in reduced structural integrity of the airplane, accomplish the following:

Note 2: The inspection required by paragraph (a) of this AD is also included in the inspection requirement of paragraph (a) of AD 2000–05–07, amendment 39–11616. As indicated by the phrase, ''unless accomplished previously,'' for any airplane on which the initial inspection of AD 2000–05–07 has been accomplished before the effective date of this AD, the inspection specified by paragraph (a) of this AD is not required.

Inspection

(a) Before the accumulation of 7,500 total flight cycles, or within 100 flight cycles after the effective date of this AD, whichever occurs later: Perform a one-time detailed visual inspection to detect cracks in gear rib 5 (left and right) of the MLG attachment fittings at the lower flange and vertical web, in accordance with Airbus All Operators Telex (AOT) A300–57A0239 (for Model A300 B2 and B4 series airplanes) or A300–600–57A6094 (for Model A300–600 series airplanes), both dated August 2, 2001.

(1) If any cracking is detected and it is found at one hole only and does not extend out of the spotface of the hole: Prior to further flight, repair in accordance with the applicable AOT.

(2) If any cracking is detected and it is found at more than one hole or extends out of the spotface of any hole: Repair in accordance with a method approved by the Manager, International Branch, ANM–116, FAA, Transport Airplane Directorate; or the Direction Générale de l'Aviation Civile (or its delegated agent).

Note 3: The AOTs refer to Airbus Service Bulletins A300–57A0234 (for Model A300 B2 and B4 series airplanes) and A300–57A6087 (for Model A300–600 series airplanes) as additional sources of service information for the inspection and repair of any cracking found during the inspection.

Note 4: For the purposes of this AD, a detailed visual inspection is defined as: ''An intensive visual examination of a specific structural area, system, installation, or assembly to detect damage, failure, or irregularity. Available lighting is normally supplemented with a direct source of good lighting at intensity deemed appropriate by the inspector. Inspection aids such as mirror, magnifying lenses, etc., may be used. Surface cleaning and elaborate access procedures may be required.''

Alternative Methods of Compliance

(b) An alternative method of compliance or adjustment of the compliance time that provides an acceptable level of safety may be used if approved by the Manager, International Branch, ANM–116. Operators shall submit their requests through an appropriate FAA Principal Maintenance Inspector, who may add comments and then send it to the Manager, International Branch, ANM–116.

Note 5: Information concerning the existence of approved alternative methods of compliance with this AD, if any, may be obtained from the International Branch, ANM–116.

Special Flight Permits

(c) Special flight permits may be issued in accordance with §§ 21.197 and 21.199 of the Federal Aviation Regulations (14 CFR 21.197 and 21.199) to operate the airplane to a location where the requirements of this AD can be accomplished.

Incorporation by Reference

(d) Except as required by paragraph (a)(2) of this AD: The actions must be done in accordance with Airbus All Operators Telex A300–57A0239, dated August 2, 2001; or Airbus All Operators Telex A300–600–57A6094, dated August 2, 2001; as applicable. This incorporation by reference was approved by the Director of the Federal Register in accordance with 5 U.S.C. 552(a) and 1 CFR part 51. Copies may be obtained from Airbus Industrie, 1 Rond Point Maurice Bellonte, 31707 Blagnac Cedex, France. Copies may be inspected at the FAA, Transport Airplane Directorate, 1601 Lind Avenue, SW., Renton, Washington; or at the Office of the Federal Register, 800 North Capitol Street, NW., suite 700, Washington, DC.

Note 6: The subject of this AD is addressed in French telegraphic airworthiness directive T2001–364(B), dated August 2, 2001.

Effective Date

(e) This amendment becomes effective on September 13, 2001.

Issued in Renton, Washington, on August 20, 2001.

Vi L. Lipski,

Manager, Transport Airplane Directorate, Aircraft Certification Service.

[FR Doc. 01–21487 Filed 8–28–01; 8:45 am]

BILLING CODE 4910–13–P

DEPARTMENT OF TRANSPORTATION

Federal Aviation Administration

14 CFR Part 39

[Docket No. 2001–SW–13–AD; Amendment 39–12408; AD 2001–17–17]

RIN 2120–AA64

Airworthiness Directives; Bell Helicopter Textron, Inc. Model 47B, 47B–3, 47D, 47D–1, 47G, 47G–2, 47G2A, 47G–2A–1, 47G–3, 47G–3B, 47G–3B–1, 47G–3B–2, 47G–3B–2A, 47G–4, 47G–4A, 47G–5, 47G–5A, 47H–1, 47J, 47J–2, 47J–2A, and 47K Helicopters

AGENCY: Federal Aviation Administration, DOT.

ACTION: Final rule.

SUMMARY: This amendment supersedes an existing airworthiness directive (AD) that applies to Bell Helicopter Textron, Inc. (BHTI) Model 47B, 47B–3, 47D, 47D–1, 47G, 47G–2, 47G2A, 47G–2A–1, 47G–3, 47G–3B, 47G–3B–1, 47G–3B–2, 47G–3B–2A, 47G–4, 47G–4A, 47G–5, 47G–5A, 47H–1, 47J, 47J–2, 47J–2A, and 47K helicopters. That AD currently requires either recurring liquid penetrant or eddy current inspections of the main rotor blade grip (grip) threads for a crack. If a crack is detected, that AD requires, before further flight, replacing the cracked grip with an airworthy grip. That AD also establishes a retirement life of 1200 hours time-in-service (TIS) for each grip. This AD contains the same requirements as the existing AD but adds two part numbers (P/N) to the applicability and requires only recurring eddy current inspections of the grip threads. This AD also requires reporting any results of the grip inspections to the FAA Rotorcraft Certification Office. This AD is prompted by the results of an accident investigation, an operator survey conducted by a trade association, various comments concerning the current AD, and a further analysis of field service data. The actions specified by this AD are intended to prevent failure of a grip, loss of a main rotor blade, and subsequent loss of control of the helicopter.

EFFECTIVE DATE: October 3, 2001.

FOR FURTHER INFORMATION CONTACT: Marc Belhumeur, Aviation Safety Engineer, FAA, Rotorcraft Directorate, Rotorcraft Certification Office, Fort Worth, Texas 76193–0170, telephone (817) 222–5177, fax (817) 222–5783.

SUPPLEMENTARY INFORMATION:

Background Information

On May 12, 1987, the FAA issued AD 86–06–08R1 (52 FR 24135, June 29, 1987) that amended AD 86–06–08 (51 FR 11300, April 2, 1986). Those AD's required an initial and repetitive fluorescent dye penetrant inspection of each grip. On August 31, 2000, the FAA issued Emergency AD 2000–18–51 that superseded AD's 86–06–08 and 86–06–08R1. AD 2000–18–51 requires initial and recurring liquid penetrant or eddy current inspections of the grip threads for a crack and, before further flight, replacing any cracked grip with an airworthy grip. That Emergency AD also establishes a retirement life of 1200 hours TIS for each grip. That Emergency AD was published in the **Federal Register** on November 15, 2000 (65 FR 68884) as a final rule, request for comments.

Airworthiness Directive 2000–18–51 was prompted by the results of an investigation of an August 1998 Canadian accident in which a grip failed on a BHTI Model 47G–2 helicopter due to a fatigue crack. An analysis of field service data revealed fatigue cracks in the majority of the grips inspected. The requirements of that AD are intended to prevent failure of a grip, loss of a main rotor blade, and subsequent loss of control of the helicopter.

Since issuing AD 2000–18–51, other cracked grips with less than 1200 hours TIS have been discovered including one grip with a 2-inch crack through the grip. Since then, the FAA has also determined that the liquid penetrant inspection is inadequate for finding smaller cracks in the grip threads. Additionally, two parts produced under a Parts Manufacturer Approval (PMA), P/Ns R74–120–252–11 and R74–120–135–5, were inadvertently omitted from the applicability of AD 2000–18–51. Based on these findings, the earlier accident investigation, a further analysis of field service data, the results of an operator survey conducted by a trade association, and several comments received as a result of the issuance of AD 2000–18–51 as a final rule, request for comments, the FAA issued a Notice of Proposed Rulemaking (NPRM) on March 23, 2001 (66 FR 17105, March 29, 2001) proposing to supersede AD 2000–18–51.

Interested persons have been afforded an opportunity to participate in the making of this amendment. Due consideration has been given to the numerous comments received from the 17 commenters. The comments and the FAA's responses are listed in the following table:

Comment	FAA response
1. A couple of commenters state that the FAA should make available to the public all of the history related to the failed grips, to include the damage history, manufacture date, and hours.	The FAA concurs and will place in the public docket anyinformation that is not proprietary. Anyone wishing this information can obtain it by submitting a request under the Freedom of Information Act to the office provided under the caption **FOR FURTHER INFORMATION CONTACT**.
2. Several commenters state that the grips should be eddy current inspected before initial installation to ensure that they are airworthy.	The FAA does not concur. The FAA has determined that the 300-hour TIS inspection interval is sufficient to ensure safety.
3. Several commenters question the accuracy of the information gathered from the Canadian accident. Many commenters state that the 1998 accident seems to be a result of poor quality control. Several other commenters state that the grip had a questionable history or incomplete records.	The FAA does not concur. The grip in question was within specifications, and records indicate that the helicopter on which the grip was installed was certified, equipped, and maintained in accordance with acceptable procedures.
4. A few commenters state that the FAA has not shown that the affected grips are unsafe after 1200 hours TIS. The commenters state that if the FAA believes a crack will not propagate to failure within 300 hours TIS for either the smaller or larger grip, the grip retirement life should remain at the original 2500 hours for wood-blade grips and 5000 hours for metal-blade grips.	The FAA does not concur. The FAA believes that a crack will not propagate to failure within 300 hours TIS only if the part life is limited to 1200 hours TIS. After 1200 hours TIS, the probability of cracking is too high and recurring inspections may not provide an adequate level of safety. Also, recurring inspections by themselves are not a terminating action.

Comment	FAA response
5. A couple of commenters state that it is not clear who is responsible for reporting results of the grip eddy current inspection to the FAA. The commenters state that the nondestructive inspection (NDI) facility should be responsible for reporting the results.	The FAA does not concur. The owners/operators are responsible for complying with the AD, including reporting the results of the grip eddy current inspections to the FAA. Furthermore, the NDI facility typically only receives minimal aircraft information when parts are sent to them for inspection; therefore, if they were required to report to the FAA they would need to do an inquiry to obtain all the FAA-requested information.
6. Two commenters state that the public should be kept abreast of the on-going BHTI blade grip propagation tests. The commenters also state that if the tests show that a crack will not propagate to failure within 300, 400, 500, or 600 hours TIS, the FAA should change the eddy current inspections to match the BHTI test results.	The FAA partially concurs. Detailed test results are generally proprietary to the manufacturer; however, if the BHTI blade grip propagation tests justify a change to the eddy current inspection intervals, the FAA will adjust the intervals as appropriate.
7. Several commenters state that previous grip failures may have been initiated by sudden stoppage, trailer transporting, rotor over-speed, bad installation procedures, poor maintenance, or other misuse.	The FAA does not concur. Even though these types of abuses could damage the grips, there has been no clear connection between these types of abuses and all the cracked grips.
8. One commenter states that all new blade grips with redesigned root radii may still have cracking problems, and the FAA should issue a Special Airworthiness Information Bulletin (SAIB) to that effect and recommend a voluntary eddy current inspection at 300-hour TIS intervals.	The FAA does not concur; it has no data to support recommending a voluntary eddy current inspection of the redesigned grips.
9. Two commenters state that the FAA should send notification of proposed AD action to each registered owner and not just post a notice in the **Federal Register**.	The FAA does not concur. Only emergency ADs are sent to each registered owner followed by the publication of the final rule in the **Federal Register**. In compliance with the Administrative Procedures Act, notification of proposed action is given by **Federal Register** notice. However, these published notices may be accessed via the Internet.
10. One commenter states that the reinstallation of the steel adapter nuts to the aluminum grip during recurring inspections can create an unsafe condition. Another commenter states that frequent dismantling of these components is harmful.	The FAA does not concur. Both the adapter and the grip should be cleaned and inspected for any burrs, damage, or out-of tolerance threads before any reinstallation. These grips have had recurring inspections since 1985, and the service history suggests that reinstalling the adapter to the grip threads causes no damage if done properly.
11. A few commenters state that an x-ray would be better than an eddy current inspection for finding cracks in the grip threads.	The FAA does not concur. There is no data that suggests that x-rays would increase the likelihood of finding cracks in the grip threads. Compared to eddy current inspections, x-ray inspections are more expensive and do not offer any advantage other than finding internal flaws. Internal flaws are not a concern in grip-thread cracking. The grips cylindrical design also makes the x-ray inspection difficult to perform.
12. Many commenters state that the FAA does not know what caused the problems with the grips, does not have sufficient or reliable data, and has based ADs on faulty equipment and questionable airworthiness records.	The FAA does not concur. The FAA has extensively researched this safety concern and is continuously monitoring in-service problems of the fleet worldwide, taking into account accident data and service difficulty information. The most common reason for cracking has been high stress concentrations in the affected parts. All of the cracked grips had a high stress concentration due to the sharp radii in the thread root.
13. One commenter states that there have been no instances in the U.S. fleet where the old 300-hour zyglo inspection has not maintained an adequate level of safety; therefore, AD 86–06–08 adequately prevents an unsafe condition.	The FAA does not concur. Neither AD 86–06–08 nor AD 86–06–08 R1 addressed the cracking found in grips with less than 1200 hours TIS. Also, the FAA has received reports outlining situations where zyglo inspections have not found known cracks.
14. Two commenters state that a 300-hour TIS inspection interval should be allowed if the last inspection performed on the grips was an eddy current inspection.	The FAA concurs and has made that change in this final rule.
15. Many commenters state that the FAA should change the requirement of the initial inspection from ''the initial inspection is within 10 hours TIS for grips that have 300 hours or more hours TIS'' to ''an initial inspection that is within 10 hours TIS for grips that have not had any previous inspection and have 300 hours or more TIS''.	The FAA concurs and has made that change in this final rule AD.
16. A commenter states that 8 days and revenue of $5,000 a day should be added to the economic impact of the AD.	The FAA does not concur. Although the FAA understands that some operators could have their helicopters grounded for several days, which will result in a loss of revenue, any cost estimate based on assumed ground time and lost revenue would be speculative. The FAA bases its economic impact costs only on known parameters such as labor and parts costs.
17. A commenter states that until everyone agrees on correct procedures, only a one-time inspection should be required.	The FAA does not concur. Data has shown that cracks can develop any time during a grip's service life, and inspecting the grips on a regular basis is needed to prevent a failure.
18. A couple of commenters point out that the Canadian and Australian airworthiness authorities have retained the original retirement lives of the grips and have not amended their current ADs, and according to a recent survey, the majority of the grips in Canada reach their retirement life with no defects.	The FAA partially concurs. Transport Canada and the Civilian Aviation Safety Authority of Australia have changed the initial eddy current inspection from 1200 hours TIS to 600 hours TIS. Neither authority has changed the grip's retirement life; however, they have their own rules and procedures and must make their own safety determinations.

Comment	FAA response
19. One commenter states that the proposed AD should not be issued. The commenter explains his belief that the grip installed on the 1998 Canadian accident fractured because water was lodged in the grip's thread and because pitting was in the thread roots.	The FAA does not concur. The accident report states that water was dislodged during disassembly of the grip from the hub. This does not mean that water was in the threads, nor does the report suggest water in the threads. The report states that there was extensive pitting in the threads. The pits are 0.0008 inch or less and cannot be seen by the naked eye.
20. One commenter states that the 1971 and 1972 accidents that occurred in the U.S. were a result of installing the wrong grips.	The FAA does not concur. The grips involved in those accidents were P/N 47–120–135–1 and –2. Those grips were approved for the BHTI Model 47 G–2 helicopters. The newer approved grips are P/N 47–120–135–3. There are no differences between either of these part-numbered grips at the threads.
21. Several commenters state that the problem with the failed/fractured grips is a manufacturing defect or a quality control problem. Many commenters believe that the manufacturer should inspect each grip before it is sold and that the same requirement should be placed on grips manufactured under PMA.	The FAA does not concur. The FAA has not found any manufacturing defect or quality control problem.
22. One commenter states that an eddy current inspection of the grip, before further flight, should be added to the AD in the event of a sudden stoppage occurrence. Also, as part of the reporting the requirements, add the question ''Has this grip had any prior history involving a sudden stoppage incident or aircraft accident (sudden stoppage as defined in the Bell 47 Maintenance and Overhaul Instructions)?''.	The FAA does not concur. Although this type of abuse could damage grips, there has been no documented connection between sudden stoppage and the cracked grips. Also, all sudden stoppages require removal and disassembly of the main rotor. If blade impact is violent, or if the drag brace belt is sheared and the aft side of the blade butt contacts the aft outboard side of the grip, the complete hub assembly must be replaced.
23. One commenter states that the assumption that dye penetrant inspections are not reliable cannot be accepted. The commenter also states that two labs, one of which is listed in Appendix 2 of the proposal as a recommended facility, state that, for the purpose of the proposed inspection, ''the high sensitivity level of the dye penetrant method would be just as accurate as the eddy current method.'' Additionally, the commenter states that United States has been using a dye penetrant inspection method, probably testing more aircraft with more hours than other countries, inspection. and we have had no accidents''.	The FAA does not concur. The FAA has received reports of confirmed cracks missed by a dye penetrant inspection and found by an eddy current inspection. Although dye penetrant inspections remain a reliable inspection method, the FAA has determined that the eddy current inspection is more appropriate when inspecting for cracks in the blade grip threads.
24. One commenter states that few of the facilities identified in Appendix 2 of the proposal can perform the proposed tests because they do not have the probe required to do so. This situation can cause a hardship on operators who are on tight schedules or live in remote areas. The commenter states that there is no mention in the proposal of any alternate means of compliance when rapid inspection services or parts are not available.	The FAA does not concur. Paragraph (e) of the NPRM and paragraph (g) of this AD address the procedure for obtaining an alternative method of compliance (AMOC). Appendix 2 contains only a partial list of known eddy current inspection facilities. If any of these facilities do not have the equipment or expertise to inspect the threads, then another facility will need to be found or an AMOC that provides an acceptable level of safety must be requested and approved by the Manager, Rotorcraft Certification Office.
25. Several commenters state that the inspection should be performed during the normally scheduled 600 and 1200-hour inspections.	The FAA does not concur. Inspection intervals of 600 and 1200 hours TIS do not provide an adequate level of safety based on the service history of these grips.
26. One commenter states that the manufacturer changed thread standards in the late 1970's. The commenter believes that is when the problem supposedly started and AD 86–06–08 was issued.	The FAA does not concur. The FAA has determined that there was no physical change to the thread standards or design in that timeframe.
27. One commenter asks why we don't state the fact that all 4 grip failures occurred on rotor systems that had suffered sudden stoppage.	The FAA does not concur. There is no data showing that sudden stoppage is connected to grip failures and the commenter did not provide any information showing that all 4 grip failures suffered sudden stoppage or that sudden stoppage contributed to the failures.

After careful review of the available data, including the comments noted above, the FAA has determined that air safety and the public interest require the adoption of the rule with the changes described previously in the disposition of comments 14 and 15. Additionally, the FAA discovered an error in two of the P/Ns given in paragraph (d) of the NPRM; those P/Ns are corrected in this final rule. For better clarity, the FAA has also reorganized the compliance times for performing the eddy current inspections and has added an NDI testing facility to Appendix 2. The FAA has determined that these changes will neither increase the economic burden on any operator nor increase the scope of the AD.

The FAA estimates that 1130 helicopters of U.S. registry will be affected by this AD, that it will take approximately 10 work hours per helicopter to accomplish the disassembly, inspection, and reassembly of the grips from the helicopter, and that the average labor rate is $60 per work hour. Required parts, if a grip needs to be replaced, will cost approximately $4,000 per grip (there are two grips on each helicopter). Based on these figures, the total cost impact of the AD on U.S. operators is estimated to be $9,718,000, assuming one inspection per helicopter and replacement of both grips on each helicopter.

The regulations adopted herein will not have a substantial direct effect on the States, on the relationship between the national Government and the States, or on the distribution of power and responsibilities among the various levels of government. Therefore, it is determined that this final rule does not have federalism implications under Executive Order 13132.

For the reasons discussed above, I certify that this action (1) is not a ''significant regulatory action'' under Executive Order 12866; (2) is not a ''significant rule'' under DOT Regulatory Policies and Procedures (44

FR 11034, February 26, 1979); and (3) will not have a significant economic impact, positive or negative, on a substantial number of small entities under the criteria of the Regulatory Flexibility Act. A final evaluation has been prepared for this action and it is contained in the Rules Docket. A copy of it may be obtained from the Rules Docket at the FAA, Office of the Regional Counsel, Southwest Region, 2601 Meacham Blvd., Room 663, Fort Worth, Texas.

List of Subjects in 14 CFR Part 39

Air transportation, Aircraft, Aviation safety, Safety.

Adoption of the Amendment

Accordingly, pursuant to the authority delegated to me by the Administrator, the Federal Aviation Administration amends part 39 of the Federal Aviation Regulations (14 CFR part 39) as follows:

PART 39—AIRWORTHINESS DIRECTIVES

1. The authority citation for part 39 continues to read as follows:

Authority: 49 U.S.C. 106(g), 40113, 44701.

§ 39.13 [Amended]

2. Section 39.13 is amended by removing Amendment 39–11983 (65 FR 68884, November 15, 2000), and by adding a new airworthiness directive (AD), Amendment 39–12408, to read as follows:

2001–17–17 Bell Helicopter Textron, Inc.: Amendment 39–12408. Docket No. 2001–SW–13–AD. Supersedes AD 2000–18–51, Amendment 39–11983, Docket No. 2000–SW–35–AD.

Applicability: Model 47B, 47B–3, 47D, 47D–1, 47G, 47G–2, 47G2A, 47G–2A–1, 47G–3, 47G–3B, 47G–3B–1, 47G–3B–2, 47G–3B–2A, 47G–4, 47G–4A, 47G–5, 47G–5A, 47H–1, 47J, 47J–2, 47J–2A, and 47K helicopters, with main rotor blade grips, part number (P/N) 47–120–135–2, 47–120–135–3, 47–120–135–5, 47–120–252–1, 47–120–252–7, 47–120–252–11, 74–120–252–11, 74–120–135–5, R47–120–252–11, and R47–120–135–5, installed, certificated in any category.

Note 1: This AD applies to each helicopter identified in the preceding applicability provision, regardless of whether it has been otherwise modified, altered, or repaired in the area subject to the requirements of this AD. For helicopters that have been modified, altered, or repaired so that the performance of the requirements of this AD is affected, the owner/operator must request approval for an alternative method of compliance in accordance with paragraph (g) of this AD. The request should include an assessment of the effect of the modification, alteration, or repair on the unsafe condition addressed by this AD; and if the unsafe condition has not been eliminated, the request should include specific proposed actions to address it.

Compliance: Required as indicated, unless accomplished previously.

To prevent failure of a main rotor blade grip (grip), separation of a main rotor blade, and subsequent loss of control of the helicopter, accomplish the following:

(a) Conduct an eddy current inspection of the threads of both grips for a crack in accordance with Appendix 1 of this AD or an equivalent FAA-approved procedure containing the requirements of the procedure in Appendix 1:

(1) Within 300 hours time-in-service (TIS) since initial installation on any helicopter for a grip with less than 300 total hours TIS;

(2) Within 10 hours TIS for a grip with 300 or more total hours TIS that has not had any previous dye penetrant or eddy current inspection;

(3) Within 200 hours TIS since the last dye penetrant inspection; OR

(4) Within 300 hours TIS since the last eddy current inspection, whichever occurs first.

(b) Thereafter, conduct the eddy current inspection in accordance with Appendix 1 of this AD or an equivalent FAA-approved procedure containing the requirements of the procedure in Appendix 1 at intervals not to exceed 300 hours TIS.

(c) Report the results of each inspection to the FAA Rotorcraft Certification Office within 7 calendar days. Reporting requirements have been approved by the Office of Management and Budget and assigned OMB control number 2120–0056.

Note 2: See Appendix 2 of this AD for a list of known eddy current inspection facilities.

(d) If a crack is detected, before further flight, replace any cracked grip with an airworthy grip.

(e) On or before 1200 hours TIS, replace each grip with an airworthy grip.

(f) This AD establishes a retirement life of 1200 hours TIS for the grips, P/N 47–120–135–2, 47–120–135–3, 47–120–135–5, 47–120–252–1, 47–120–252–7, 47–120–252–11, 74–120–252–11, 74–120–135–5, R47–120–252–11, and R47–120–135–5.

(g) An alternative method of compliance or adjustment of the compliance time that provides an acceptable level of safety may be used if approved by the Manager, Rotorcraft Certification Office, FAA. Operators shall submit their requests through an FAA Principal Maintenance Inspector, who may concur or comment and then send it to the Manager, Rotorcraft Certification Office.

Note 3: Information concerning the existence of approved alternative methods of compliance with this AD, if any, may be obtained from the Rotorcraft Certification Office.

(h) Special flight permits may be issued in accordance with 14 CFR 21.197 and 21.199 to operate the helicopter to a location where the requirements of this AD can be accomplished.

(i) This amendment becomes effective on October 3, 2001.

Appendix 1

Nondestructive Inspection Procedure

Task: Eddy Current (ET) Inspection of Mast Threads for Cracks

1.0 Area of Inspection

1.1 The inboard inside diameter machined threads (reference figure 1).

2.0 Equipment

2.1 Zetec Miz-20/22, Phasec 2200 or equivalent piece of equipment.

2.2 Match molded ET probe SPC–193 (100kHz) or equivalent. (See Figure 3.)

2.3 Reference standard EC–010–021, or equivalent. (See Figures 4 and 5.)

2.4 Light oil.

3.0 Personnel Requirements

3.1 Personnel performing the ET inspection must be minimally qualified to a Level II in ET inspection, certified in accordance with an industry accepted standard (such as ATA–105, NAS–410, or MIL–STD–410) or an FAA accepted company procedure.

4.0 Standardization

4.1 Connect probe to flaw detector and turn power on.

4.2 Adjust the Phasec 2000 as shown in table 1. Adjust all other equipment as necessary.

4.3 Adjust the V:H gain ratio to 1.5:1–2:1.

4.4 Monitor the crack response when moving the probe in one direction only across each EDM notch of the standard. Adjust the coarse gain for a crack response of 2–3 units from the smallest (0.04″) notch. Record the number units of displacement and noise level for each of the EDM notches.

5.0 Pre Inspection

5.1 The part shall be clean and free of loose debris.

5.2 A thin coating of clean oil may be applied to the teeth to help the ET probe slide easily.

6.0 Inspection

6.1 Place the probe into the threaded area and slide it in the same direction as was done on the standard while monitoring the screen for root cracks. Moving the probe in the same direction produces a repeatable display that allows for more accurate flaw size determination. Scan the probe along each individual thread until all the threads are inspected. (See Figures 2 and 3.)

7.0 Evaluation

7.1 Repeat standardization and rescan any areas where there is a vertical crack-like deflection.

7.2 If indication persists, mark the location on the part. Record the number units of displacement, phase orientation, and noise level.

8.0 Accept/Reject Criteria

8.1 All repeatable crack-like indications above the noise level detected shall be cause for rejection.

Zetec M12 - 20/22, Phasec 2200 Settings

Dialogue: English	Alarm Stretch: 1S	Probe: Standard
Printer: HP PCL	Alarm Shape: Off	Drive: +10dB 6.3V
◀Bright Bal▶ Low Split	Apply to: Trace 1	Analogue 1:Out Off
Graticule: Rect. A	◀Alarm action▶ Run Silent	Analogue 2: Out Off

Ser'l Conf. Alarm I/0 Time Batt.

Hi-pass: DC	CH1 Freq: 100KHz	◀ Mode: Diff 1Ch
Lo-pass: 20 Hz	CH1 PHASE: 193.0°	Display: XY
Inp. Gain: +20dB	CH1 GAIN: 46.0Db	View: Ch1
Optimize: ◀ + ▶	CH1 X:Y: X -3.0dB	Persist: Permn't

Table 1, Appendix 1

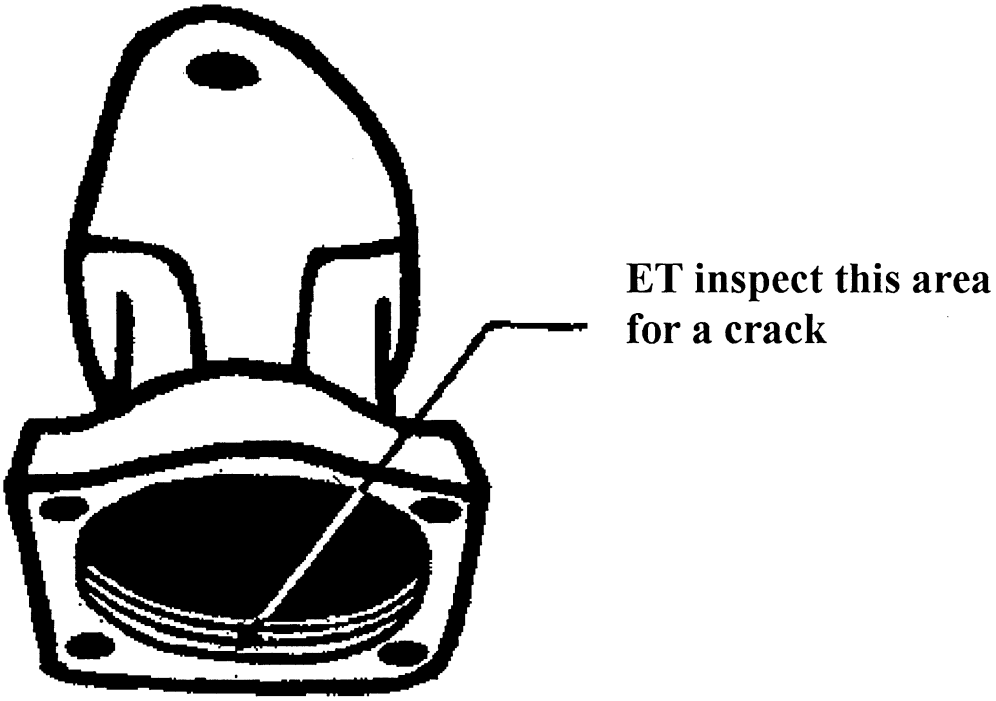

Figure 1, Appendix 1

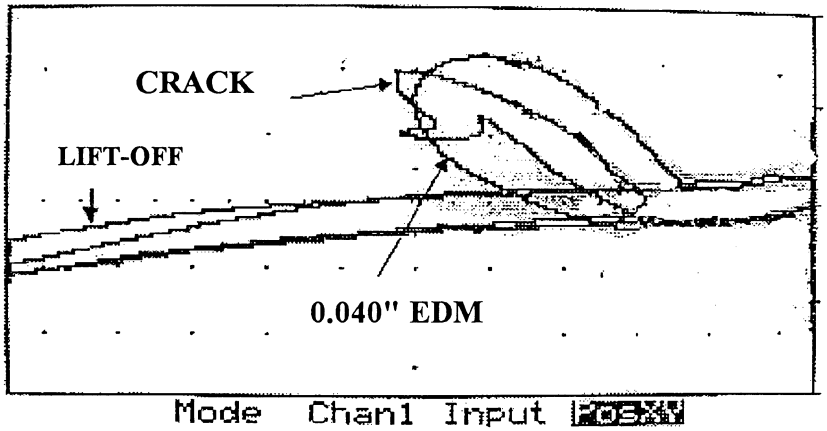

A typical flaw indication appears on the eddy current monitor as shown above.

Figure 2, Appendix 1

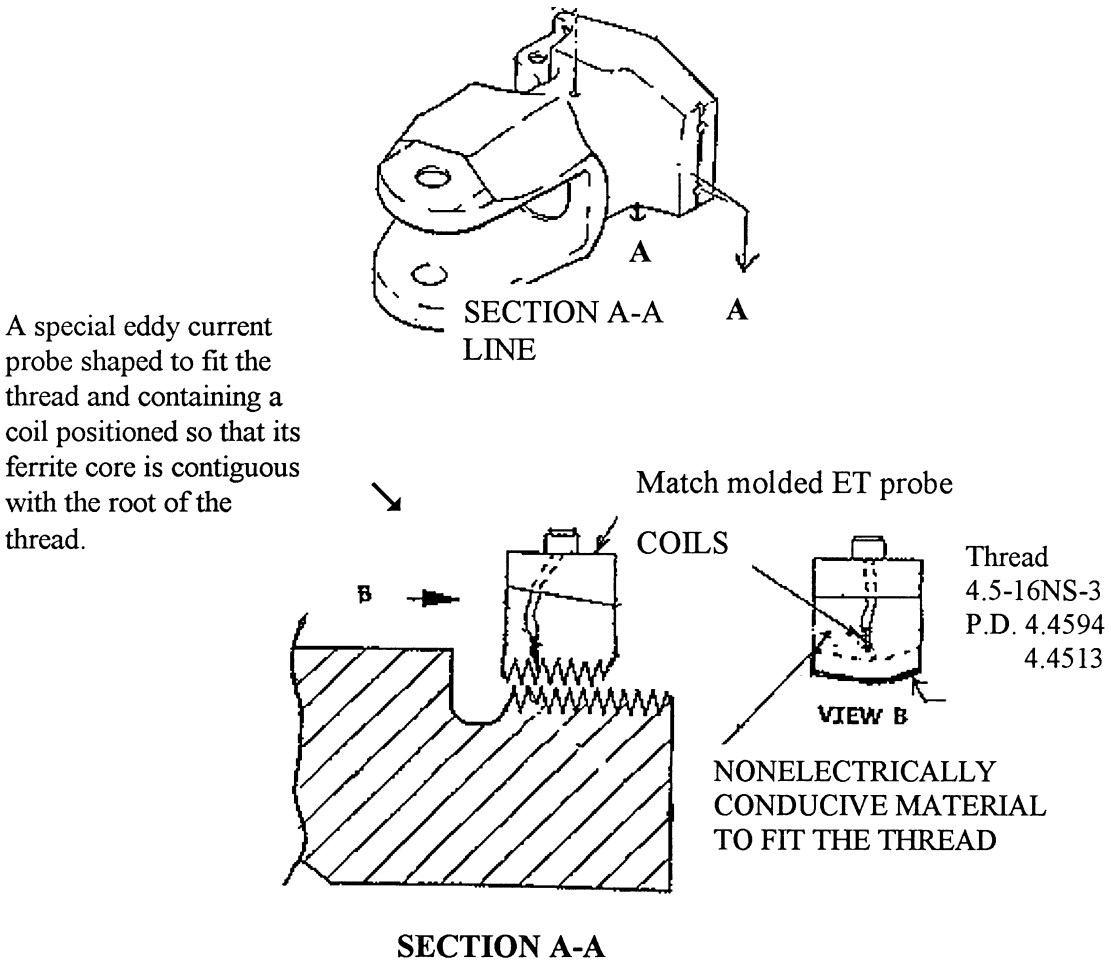

Figure 3, Appendix 1

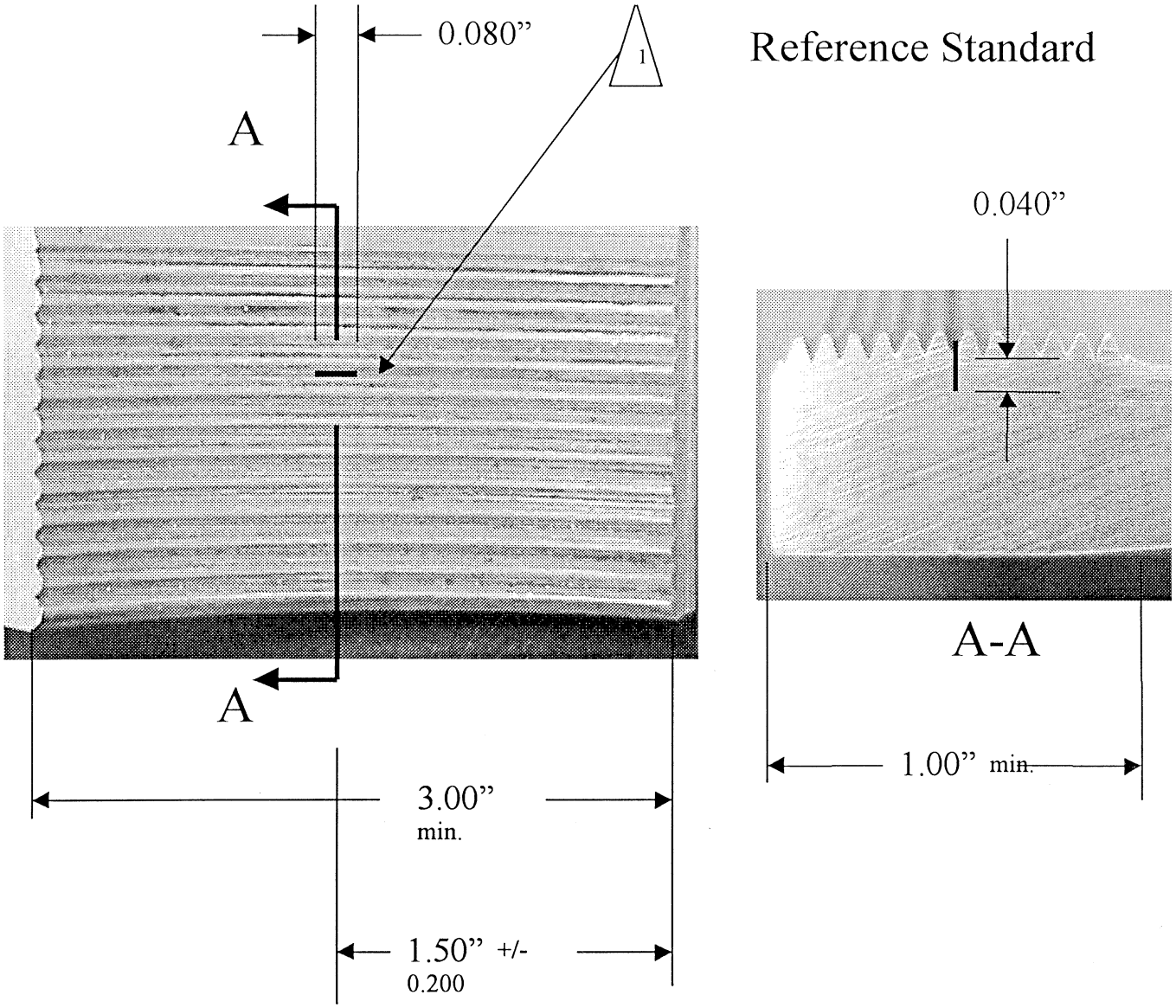

1 EDM 1 place only in thread root.
Notch width shall be 0.004 max.
All other dimensions to be +/- 0.004 from indicated.

Figure 4, Appendix 1

Reference Standard

MACHINING NOTES:

1. Standard may be machined from aluminum tube stock.
2. The standard shall contain a minimum of four teeth per the tooth dimensions specified.
3. The EDM notch shall be placed in the center most tooth root as measured across the width of the standards. There shall be no less than two teeth and one root on either side of the EDM notch.

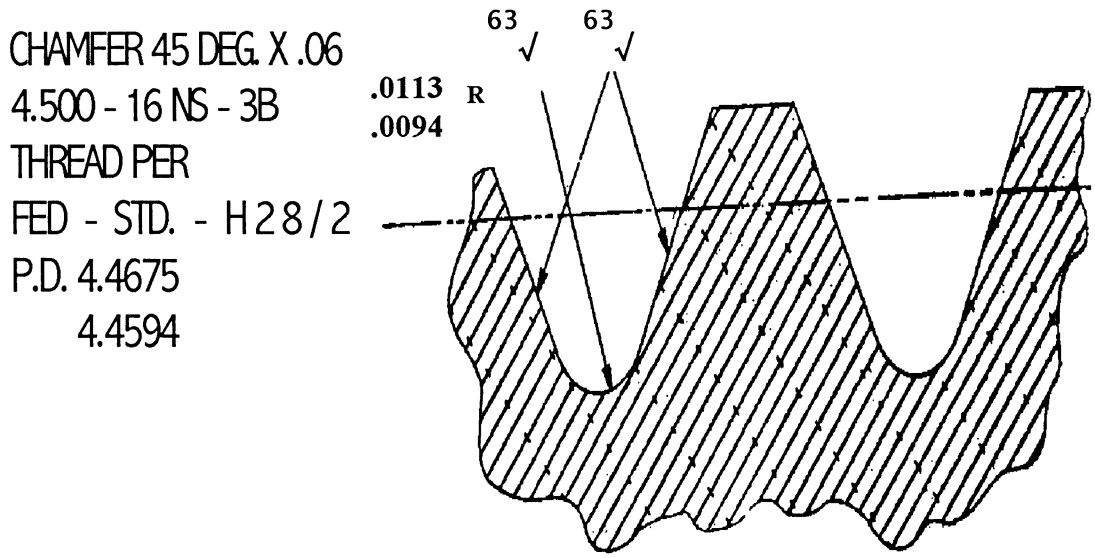

Figure 5, Appendix 1

BILLING CODE 4910–13–C

Appendix 2

Partial List of Nondestructive Inspection Testing Facilities Identified by Operators and FAA

Met Chem Testing Laboratories Inc.
369 W. Gregson Ave. (3085 S.)
Salt Lake City, Utah 84115–3440
Phone: (801) 487–0801
FAX: (801) 466–8790
www.metchemtesting.com

Galactic NDT Services 10728 D. South Pipeline RD
Hurst, Texas 76053
Phone: (800) 458–6387

Global Testing Technologies
1173 North Service Rd. Unit D3
Oakville Toronto Canada
Phone: (905) 847–9300
FAX: (905) 847–9330

Paragon Services, Inc.
1015 S. West St.
Wichita, KS 67213
Phone: (316) 945–5285
FAX: (316) 945–0629

NOE Services
8775 E. Orchard Rd. #809
Englewood, CO
Phone: (303) 741–0518
FAX: (303) 741–0519

Applied Technical Services, Inc.
1190 Atlanta Industrial Drive
Marietta, GA 30066
Phone: (770) 423–1400
FAX: (770) 514–3299

Rotorcraft Support
Van Nuys CA 91406
Phone: (818) 997–7667
FAX: (818) 997–1513

Palm Beach Aircraft Propeller, Inc
Palm Beach County Park Airport
2633 Lantana Road
Suite 23, Bldg 1501
Lantana, FL 33462
Phone: (800) 965–7767
FAX: (561) 965–7933
Email: *info@pbapi.com*
Website: *www.pbapi.com*
Contact: Will Burbage

Other FAA approved repair facilities may be used.

Appendix 3

AD Compliance Inspection Report (Sample Format)

Bell Model 47 Main Rotor Blade Grip

Provide the following information and mail or fax it to:

Manager, Rotorcraft Certification Office, Federal Aviation Administration, Fort Worth, Texas, 76193–0170, USA, Fax: 817–222–5783.

Aircraft Registration No:
Helicopter Model:
Helicopter Serial Number:
Owner and Operator of the Helicopter:

	Grip #1	Grip #2
Part Number:		
Serial Number:		

Hours TIS on the Part at Inspection:

Crack Found (Y/N)
If yes, describe below.

Description of Findings

Who performed the inspections?

If a crack was found, describe the crack size, location, and orientation (provide a sketch or pictures with the grip part and serial number).

Provide any other comments.

Issued in Fort Worth, Texas on August 15, 2001.

David A. Downey,

Manager, Rotorcraft Directorate, Aircraft Certification Service.

[FR Doc. 01–21749 Filed 8–28–01; 8:45 am]

BILLING CODE 4910–13–U

DEPARTMENT OF TRANSPORTATION

Federal Aviation Administration

14 CFR Part 39

[Docket No. 2001–NM–145–AD; Amendment 39–12422; AD 98–24–02 R1]

RIN 2120–AA64

Airworthiness Directives; McDonnell Douglas Model MD–11 Series Airplanes

AGENCY: Federal Aviation Administration, DOT.

ACTION: Final rule.

SUMMARY: This amendment revises an existing airworthiness directive (AD), applicable to certain McDonnell Douglas Model MD–11 series airplanes, that requires a one-time inspection to identify the part numbers of two dimmer controls for the overhead instrument panel light and circuit breaker lightplate located in the flight compartment. For airplanes on which a dimmer control having an incorrect part number is installed, that AD also requires replacing the dimmer control with a new part; modifying and reinstalling the existing dimmer control; or reinstalling a dimmer control following modification of the part by the part manufacturer. That AD was prompted by reports of smoke emitting from the overhead panels in the cockpit area. The actions specified by that AD are intended to prevent an electrical failure in the overhead dimmer control due to overheating of a printed circuit board capacitor in the dimmer control, which could result in rupture of the capacitor and smoke in the flight compartment. This amendment revises the term ''serial numbers'' in the applicability statement to ''fuselage numbers.''

DATES: Effective October 3, 2001.

The incorporation by reference of certain publications listed in the regulations was approved previously by the Director of the **Federal Register** as of November 30, 1998 (63 FR 63402, November 13, 1998).

ADDRESSES: The service information referenced in this AD may be obtained from Boeing Commercial Aircraft Group, Long Beach Division, 3855 Lakewood Boulevard, Long Beach, California 90846, Attention: Data and Service Management, Dept. C1-L5A (D800–0024). This information may be examined at the Federal Aviation Administration (FAA), Transport Airplane Directorate, Rules Docket, 1601 Lind Avenue, SW., Renton, Washington; or at the FAA, Los Angeles Aircraft Certification Office, 3960 Paramount Boulevard, Lakewood, California; or at the Office of the Federal Register, 800 North Capitol Street, NW., suite 700, Washington, DC.

FOR FURTHER INFORMATION CONTACT: Brett Portwood, Aerospace Engineer, Systems and Equipment Branch, ANM–130L, FAA, Los Angeles Aircraft Certification Office, 3960 Paramount Boulevard, Lakewood, California 90712–4137; telephone (562) 627–5350; fax (562) 627–5210.

SUPPLEMENTARY INFORMATION: A proposal to amend part 39 of the Federal Aviation Regulations (14 CFR part 39) by revising AD 98–24–02, amendment 39–10889 (63 FR 63402, November 13, 1998), which is applicable to certain McDonnell Douglas Model MD–11 series airplanes, was published in the **Federal Register** on June 11, 2001 (66 FR 31194). The action proposed to continue to require a one-time inspection to identify the part numbers of two dimmer controls for the overhead instrument panel light and circuit breaker lightplate located in the flight compartment. For airplanes on which a dimmer control having an incorrect part number is installed, the action also proposed to continue to require replacing the dimmer control with a new part; modifying and reinstalling the existing dimmer control; or reinstalling a dimmer control following modification of the part by the part manufacturer. The action also proposed to revise the term ''serial numbers'' in the applicability statement to ''fuselage numbers.''

Comments

Interested persons have been afforded an opportunity to participate in the making of this amendment. Due consideration has been given to the single comment received.

The commenter has no objection to the proposed revision.

Conclusion

After careful review of the available data, including the comment noted above, the FAA has determined that air safety and the public interest require the adoption of the rule as proposed.

Cost Impact

There are approximately 174 Model MD–11 series airplanes of the affected design in the worldwide fleet. The FAA estimates that 65 airplanes of U.S. registry will be affected by this AD, that it will take approximately 1 work hour per airplane to accomplish the required actions, and that the average labor rate is $60 per work hour. Based on these figures, the cost impact of the AD on U.S. operators is estimated to be $3,900, or $60 per airplane.

The cost impact figure discussed above is based on assumptions that no operator has yet accomplished any of the requirements of this AD action, and that no operator would accomplish those actions in the future if this AD were not adopted. The cost impact figures discussed in AD rulemaking actions represent only the time necessary to perform the specific actions actually required by the AD. These figures typically do not include incidental costs, such as the time required to gain access and close up, planning time, or time necessitated by other administrative actions.

Regulatory Impact

The regulations adopted herein will not have a substantial direct effect on the States, on the relationship between the national Government and the States, or on the distribution of power and responsibilities among the various levels of government. Therefore, it is determined that this final rule does not have federalism implications under Executive Order 13132.

For the reasons discussed above, I certify that this action (1) is not a ''significant regulatory action'' under Executive Order 12866; (2) is not a ''significant rule'' under DOT Regulatory Policies and Procedures (44 FR 11034, February 26, 1979); and (3) will not have a significant economic impact, positive or negative, on a substantial number of small entities under the criteria of the Regulatory Flexibility Act. A final evaluation has been prepared for this action and it is contained in the Rules Docket. A copy of it may be obtained from the Rules Docket at the location provided under the caption **ADDRESSES.**

List of Subjects in 14 CFR Part 39

Air transportation, Aircraft, Aviation safety, Incorporation by reference, Safety.

Adoption of the Amendment

Accordingly, pursuant to the authority delegated to me by the Administrator, the Federal Aviation Administration amends part 39 of the Federal Aviation Regulations (14 CFR part 39) as follows:

PART 39—AIRWORTHINESS DIRECTIVES

1. The authority citation for part 39 continues to read as follows:

Authority: 49 U.S.C. 106(g), 40113, 44701.

§ 39.13 [Amended]

2. Section 39.13 is amended by removing amendment 39–10889 (63 FR 63402, November 13, 1998), and by adding a new airworthiness directive (AD), amendment 39–12422, to read as follows:

98–24–02 R1 McDonnell Douglas: Amendment 39–12422. Docket 2001–NM–145–AD. Revises AD 98–24–02, Amendment 39–10889.

Applicability: Model MD–11 series airplanes, fuselage numbers 447 through 597 inclusive; certificate in any category.

Note 1: This AD applies to each airplane identified in the preceding applicability provision, regardless of whether it has been modified, altered, or repaired in the area subject to the requirements of this AD. For airplanes that have been modified, altered, or repaired so that the performance of the requirements of this AD is affected, the owner/operator must request approval for an alternative method of compliance in accordance with paragraph (c) of this AD. The request should include an assessment of the effect of the modification, alteration, or repair on the unsafe condition addressed by this AD; and, if the unsafe condition has not been eliminated, the request should include specific proposed actions to address it.

Compliance: Required as indicated, unless accomplished previously.

To prevent an electrical failure in the dimmer control for the overhead instrument panel light and circuit breaker lightplate due to overheating of a printed circuit board (PCB) capacitor in the dimmer control, which could result in rupture of the capacitor and smoke in the flight compartment, accomplish the following:

Inspection and Corrective Action, If Necessary

(a) Within 30 days after November 30, 1998 (the effective date of AD 98–24–02, amendment 39–10889), perform a one-time visual inspection of the two dimmer controls for the overhead instrument panel light and circuit breaker lightplate located in the flight compartment to identify the part numbers of the dimmer controls.

(1) If all dimmer controls are identified as part number (P/N) 263–2, no further action is required by this AD.

(2) If any dimmer control is identified as P/N 263–1, within 30 days after accomplishing the inspection specified by paragraph (a) of this AD, accomplish the actions required by paragraph (a)(2)(i), (a)(2)(ii), or (a)(2)(iii) of this AD, in accordance with McDonnell Douglas Service Bulletin MD11–33–045, dated June 14, 1995.

(i) Replace any dimmer control, P/N 263–1, with a new dimmer control, P/N 263–2. Or

(ii) Modify any dimmer control, P/N 263–1, and reinstall the modified and reidentified dimmer control in the flight compartment. Or

(iii) Remove any dimmer control, P/N 263–1; return it for modification and reidentification to Olin Aerospace Company, 11441 Willows Road NE, Redmond, Washington 98073–9745; and reinstall the modified and reidentified dimmer control in the flight compartment.

Spares

(b) As of November 30, 1998, no person shall install on any McDonnell Douglas Model MD–11 series airplane, a dimmer control, P/N 263–1, unless that dimmer control has been modified and reidentified to P/N 263–2 in accordance with McDonnell Douglas Service Bulletin MD11–33–045, dated June 14, 1995.

Alternative Methods of Compliance

(c) An alternative method of compliance or adjustment of the compliance time that provides an acceptable level of safety may be used if approved by the Manager, Los Angeles Aircraft Certification Office (ACO), FAA. Operators shall submit their requests through an appropriate FAA Principal Maintenance Inspector, who may add comments and then send it to the Manager, Los Angeles ACO.

Note 2: Information concerning the existence of approved alternative methods of compliance with this AD, if any, may be obtained from the Manager, Los Angeles ACO.

Special Flight Permits

(d) Special flight permits may be issued in accordance with §§ 21.197 and 21.199 of the Federal Aviation Regulations (14 CFR 21.197 and 21.199) to operate the airplane to a location where the requirements of this AD can be accomplished.

Incorporation by Reference

(e) Except as provided by paragraph (a) of this AD, the actions shall be done in accordance with McDonnell Douglas Service Bulletin MD11–33–045, dated June 14, 1995. The incorporation by reference of this document was approved previously by the Director of the Federal Register as of November 30, 1998 (63 FR 63402, November 13, 1998). Copies may be obtained from Boeing Commercial Aircraft Group, Long Beach Division, 3855 Lakewood Boulevard, Long Beach, California 90846, Attention: Data and Service Management, Dept. C1–L5A (D800–0024). Copies may be inspected at the FAA, Transport Airplane Directorate, 1601 Lind Avenue, SW., Renton, Washington; or at

the FAA, Los Angeles Aircraft Certification Office, 3960 Paramount Boulevard, Lakewood, California; or at the Office of the Federal Register, 800 North Capitol Street, NW., suite 700, Washington, DC.

Effective Date

(f) This amendment becomes effective on October 3, 2001.

Issued in Renton, Washington, on August 22, 2001.

Ali Bahrami,

Acting Manager, Transport Airplane Directorate, Aircraft Certification Service.

[FR Doc. 01–21746 Filed 8–28–01; 8:45 am]

BILLING CODE 4910–13–P

DEPARTMENT OF TRANSPORTATION

Federal Aviation Administration

14 CFR Part 71

[Airspace Docket No. 00–ANM–28]

Modification of Class D and Class E Airspace, Bellingham, WA

AGENCY: Federal Aviation Administration (FAA), DOT.

ACTION: Final rule.

SUMMARY: This action modifies the Class D airspace at Bellingham, WA, by amending the effective hours to coincide with the Bellingham Airport Traffic Control Tower (ATCT) hours of operation. This action also modifies the Class E airspace extension at Bellingham International Airport when the Bellingham ATCT is closed. The effect of this action clarifies when two-way radio communication with Bellingham ATCT is required and provides adequate controlled airspace when the Bellingham ATCT is closed.

EFFECTIVE DATE: 0901 UTC, November 1, 2001.

FOR FURTHER INFORMATION CONTACT: Brian Durham, ANM–520.7, Federal Aviation Administration, Docket No. 00–ANM–28, 1601 Lind Avenue SW., Renton, Washington, 98055–4056; telephone number: (425) 227–2527.

SUPPLEMENTARY INFORMATION:

History

On June 18, 2001, the FAA proposed to amend Title 14 Code of Federal Regulations, part 71 (14 CFR part 71) by modifying Class D and Class E airspace at Bellingham, WA, in order to clarify when two-way communications with the Bellingham ATCT is required and to provide adequate controlled airspace for IFR operations when the ATCT is closed (66 FR 32781). Interested parties were invited to participate in the rulemaking proceeding by submitting written comments on the proposal. A comment was received from the FAA, AVN–500, National Aeronautical Charting Office. A revision to the legal description, as written in the Notice for Proposed Rule Making (NPRM), was required to amend a small discrepancy in the airport coordinates. This is considered an insignificant modification to the airspace description as the corrections did not change the dimension of the proposed airspace action described in the NPRM.

The Rule

This amendment to Title 14 Code of Federal Regulations, part 71 (14 CFR part 71) modifies Class D and Class E airspace at Bellingham, WA, in order to clarify when two-way communications with the Bellingham ATCT is required and to provide adequate controlled airspace for IFR operations. This action modifies the Class D airspace area at Bellingham, WA, by amending the effective hours to coincide with the Bellingham ATCT hours of operation. This action modifies the Class E airspace extension at Bellingham International Airport when the Bellingham ATCT is closed. The FAA establishes Class D and Class E airspace where necessary to protect aircraft transitioning between the terminal and en route environments, and to provide local VFR sequencing by ATCT personnel. The effect of this proposal is designed to provide safe and efficient use of the navigable airspace and to promote safe flight operations under Instrument Flight Rules (IFR) and VFR at Bellingham International Airport and between the terminal and en route transition stages.

The area will be depicted on aeronautical charts for pilot reference. The coordinates for this airspace docket are based on North American Datum 83. Class D airspace areas designated for an airport, are published in Paragraph 5000, and Class E airspace areas designated as surface areas, are published in Paragraph 6004 of FAA Order 7400.9H dated September 1, 2000, and effective September 16, 2000, which is incorporated by reference in 14 CFR 71.1. The Class D and E airspace designation listed in this document will be published subsequently in the Order.

The FAA has determined that this regulation only involves an established body of technical regulations for which frequent and routine amendments are necessary to keep them operationally current. It, therefore, (1) is not a ''significant regulatory action'' under Executive Order 12866; (2) is not a ''significant rule'' under DOT Regulatory Policies and Procedures (44 FR 11034; February 26, 1979); and (3) does not warrant preparation of a Regulatory Evaluation as the anticipated impact is so minimal. Since this is a routine matter that will only affect air traffic procedures and air navigation, it is certified that this rule, will not have a significant economic impact on a substantial number of small entities under the criteria of the Regulatory Flexibility Act.

List of Subjects in 14 CFR Part 71

Airspace, Incorporation by reference, Navigation (air).

Adoption of the Amendment

In consideration of the foregoing, the Federal Aviation Administration amends 14 CFR part 71 as follows:

PART 71—DESIGNATION OF CLASS A, CLASS B, CLASS C, CLASS D, AND CLASS E AIRSPACE AREAS; AIRWAYS; ROUTES; AND REPORTING POINTS

1. The authority citation for 14 CFR part 71 continues to read as follows:

Authority: 49 U.S.C. 106(g), 40103, 40113, 40120; E.O. 10854, 24 FR 9565, 3 CFR, 1959–1963 Comp., p. 389.

§ 71.1 [Amended]

2. The incorporation by reference in 14 CFR 71.1 of the Federal Aviation Administration Order 7400.9H, Airspace Designations and Reporting Points, dated September 1, 2000, and effective September 16, 2000, is amended as follows:

Paragraph 5000 General.

* * * * *

ANM WA D Bellingham, WA [Revised]

Bellingham International Airport
(Lat. 48°47′34″ N., long. 122°32′15″ W.)

That airspace extending upward from the surface to and including 2,700 feet MSL within a 4-mile radius of Bellingham International Airport. This Class D airspace is effective during specific dates and times established in advance by a Notice to Airmen. The effective date and time will thereafter be continuously published in the Airport/Facility Directory.

* * * * *

Paragraph 6004 Class E airspace consisting of airspace extending upward from the surface designated as an extension of Class D airspace.

* * * * *

ANM WA E4 Bellingham, WA [Revised]

Bellingham International Airport
(Lat. 48°47′34″ N., long. 122°32′15″ W.)
Whatcom VORTAC
(Lat. 48°56′43″ N., long. 122°34′45″ W.)

That airspace extending upward from the surface within the 1.8 miles each side of the

Whatcom VORTAC 169° radial extending north from the 4-mile radius of the Bellingham International Airport to 2.7 miles south of the VORTAC. This Class E airspace is effective during specific dates and times established in advance by a Notice to Airmen. The effective date and time will thereafter be continuously published in the Airport/Facility Directory.

* * * * *

Issued in Seattle, Washington, on August 15, 2001.

Daniel A. Boyle,

Assistant Manager, Air Traffic Division, Northwest Mountain Region.

[FR Doc. 01–21821 Filed 8–28–01; 8:45 am]

BILLING CODE 4910–13–M

DEPARTMENT OF TRANSPORTATION

Federal Aviation Administration

14 CFR Part 71

[Airspace Docket No. 00–ANM–24]

Revision of Class E Airspace, Jackson, WY

AGENCY: Federal Aviation Administration (FAA), DOT.

ACTION: Final rule; correction.

SUMMARY: This action corrects a final rule published on May 23, 2001, that inadvertently changed the name of Jackson, WY, to Jackson Hole, WY. This action corrects the final rule by reflecting the proper city name designation in the text body and in the legal description.

EFFECTIVE DATE: 0901 UTC, September 20, 2001.

FOR FURTHER INFORMATION CONTACT: Brian Durham, ANM–520.7, Federal Aviation Administration, Docket No. 00–ANM–24, 1601 Lind Avenue, SW., Renton, Washington, 98055–4056; telephone number: (425) 227–2527.

SUPPLEMENTARY INFORMATION: On May 23, 2001, the FAA published a final rule that revised Class E airspace at Jackson Hole, WY (66 FR 28368). However, that action incorrectly described the city as Jackson Hole instead of the proper name of Jackson throughout the document. This action corrects the final rule by changing the city name from Jackson Hole, WY, to Jackson, WY.

Correction to Final Rule

Accordingly, pursuant to the authority delegated to me, the Class E airspace description at Jackson, WY, as published in the **Federal Register** on May 23, 2001, (66 FR 28368), (Federal Register Document No. 01–13049) is corrected as follows:

§ 71.1 [Corrected]

1. On pages 28368 and 28369, correct all references to the city name in Docket 00–ANM–24 from ''Jackson Hole, WY'' to read ''Jackson, WY''. References to the airport remain as published, Jackson Hole Airport.

Issued in Seattle, Washington, on August 15, 2001.

Daniel A. Boyle,

Assistant Manager, Air Traffic Division, Northwest Mountain Region.

[FR Doc. 01–21824 Filed 8–28–01; 8:45 am]

BILLING CODE 4910–13–M

DEPARTMENT OF TRANSPORTATION

Federal Aviation Administration

14 CFR Part 71

[Airspace Docket No. 01–ANM–05]

Revision of Class E Airspace, Sidney, MT

AGENCY: Federal Aviation Administration (FAA), DOT.

ACTION: Final rule.

SUMMARY: This action revises the Class E airspace at Sidney, MT. Newly developed Area Navigation (RNAV) Standard Instrument Approach Procedure (SIAP) at the Sidney-Richland Municipal Airport made this action necessary. Additional Class E 1,200 feet controlled airspace, above the surface of the earth is required to contain aircraft executing the RNAV (Global Positioning System (GPS)) RWY 1 and RNAV (GPS) RWY 19 at Sidney-Richland Municipal Airport.

EFFECTIVE DATE: 0901 UTC, November 1, 2001.

FOR FURTHER INFORMATION CONTACT: Brian Durham, ANM–520.7, Federal Aviation Administration, Docket No. 01–ANM–05, 1601 Lind Avenue SW., Renton, Washington, 98055–4056: telephone number: (425) 227–2527.

SUPPLEMENTARY INFORMATION:

History

On June 15, 2001, the FAA proposed to amend Title 14 Code of Federal Regulations, part 71 (14 CFR part 71) by revising Class E airspace at Sidney, MT, in order to accommodate new RNAV SIAPs at Sidney-Richland Municipal Airport, Sidney, MT (66 FR 32593). This action provides Class E5 airspace at Sidney, MT, to meet current criteria standards associated with the SIAP. Interested parties were invited to participate in the rulemaking proceeding by submitting written comments on the proposal. A comment was received from the FAA, AVN–500, National Aeronautical Charting Office. A revision to the legal description, as written in the Notice for Proposed Rule Making (NPRM), was required to amend a small discrepancy in the airport coordinates. This is considered an insignificant modification to the airspace description as the corrections did not change the dimension of the proposed airspace action described in the NPRM.

The Rule

This amendment to Title 14 Code of Federal Regulations, part 71 (14 CFR part 71) revises Class E airspace at Sidney, MT, in order to accommodate new RNAV (GPS) SIAPs to the Sidney-Richland Municipal Airport, Sidney, MT. This amendment revises Class E5 airspace at Sidney, MT, to meet current criteria standards associated with the RNAV and SIAP. The FAA establishes Class E airspace where necessary to contain aircraft transitioning between the terminal and en route environments. This rule is designed to provide for the safe and efficient use of the navigable airspace and to promote safe flight operations under Instrument Flight Rules (IFR) at the Sidney-Richland Municipal Airport and between the terminal and en route transition stages.

The area will be depicted on aeronautical charts for pilot reference. The coordinates for this airspace docket are based on North American Datum 83. Class E airspace areas extending upward from 700 feet or more above the surface of the earth, are published in Paragraph 6005, of FAA Order 7400.9H dated September 1, 2000, and effective September 16, 2000, which is incorporated by reference in 14 CFR 71.1. The Class E airspace designation listed in this document will be published subsequently in the Order.

The FAA has determined that this regulation only involves an established body of technical regulations for which frequent and routine amendments are necessary to keep them operationally current. It, therefore, (1) is not a ''significant regulatory action'' under Executive Order 12866; (2) is not a ''significant rule'' under DOT Regulatory Policies and Procedures (44 FR 11034; February 26, 1979); and (3) does not warrant preparation of a Regulatory Evaluation as the anticipated impact is so minimal. Since this is a routine matter that will only affect air traffic procedures and air navigation, it is certified that this rule, will not have a significant economic impact on a substantial number of small entities under the criteria of the Regulatory Flexibility Act.

List of Subjects in 14 CFR Part 71

Airspace, Incorporation by reference, Navigation (air).

Adoption of the Amendment

In consideration of the foregoing, the Federal Aviation Administration amends 14 CFR part 71 as follows:

PART 71—DESIGNATION OF CLASS A, CLASS B, CLASS C, CLASS D, AND CLASS E AIRSPACE AREAS; AIRWAYS; ROUTES; AND REPORTING POINTS

1. The authority citation for 14 CFR part 71 continues to read as follows:

Authority: 49 U.S.C. 106(g), 40103, 40113, 40120; E.O. 10854, 24 FR 9565, 3 CFR, 1959–1963 Comp., p. 389.

§ 71.1 [Amended]

2. The incorporation by reference in 14 CFR 71.1 of the Federal Aviation Administration Order 7400.9H, Airspace Designations and Reporting Points, dated September 1, 2000, and effective September 16, 2000, is amended as follows:

Paragraph 6005 Class E airspace areas extending upward from 700 feet or more above the surface of the earth.

* * * * *

ANM MT E5 Sidney, MT [Revised]

Sidney-Richland Municipal Airport, MT.
(Lat. 47°42′25″ N., long. 104°11′33″ W.)
Sidney NDB
(Lat. 47°42′41″ N., long. 104°10′54″ W.)

That airspace extending upward from 700 feet above the surface within the 7.9-mile radius of the Sidney-Richland Municipal Airport, and within 8.3 miles east and 4 miles west of the 356° bearing from the Sidney NDB extending from the NDB to 16.1 miles north of the NDB, and within 8.3 miles southeast and 4 miles northwest of the 215° bearing from the Sidney NDB extending from the NDB to 16.1 miles southwest of the NDB; and that airspace extending upward from 1,200 feet above the surface bounded by a line beginning at lat. 47°20′00″N., long. 104°08′32″W; to lat. 47°37′10″N., long. 104°48′00″ W.; to lat 47°45′34″N., long 104°38′28″W.; to lat 47°52′00″N., long 105°00′00″W.; to lat 48°03′00″N., long 105°00′00″W.; to lat 47°53′30″N., long 104°29′40″W.; to lat. 48°10′00″N., long. 104°12′00″W.; to lat 47°46′10″N., long 103°38′23″W., to the point of origin; and excluding that airspace within Federal airways; the Poplar, MT, and Glasgow, MT, Class E airspace areas.

* * * * *

Issued in Seattle, Washington, on August 15, 2001.

Daniel A. Boyle,

Assistant Manager, Air Traffic Division, Northwest Mountain Region.

[FR Doc. 01–21823 Filed 8–28–01; 8:45 am]

BILLING CODE 4910–13–M

DEPARTMENT OF TRANSPORTATION

Federal Aviation Administration

14 CFR Part 71

[Airspace Docket No. 00–ANM–27]

Modification of Class E Airspace, Lewistown, MT

AGENCY: Federal Aviation Administration (FAA), DOT.

ACTION: Final rule.

SUMMARY: This action revises the Class E airspace at Lewistown, MT. Newly developed Area Navigation (RNAV) Standard Instrument Approach Procedure (SIAP) at the Lewistown Municipal Airport made this action necessary. Additional Class E 700 feet and 1,200 feet controlled airspace, above the surface of the earth is required to contain aircraft executing the RNAV SIAP at Lewistown Municipal Airport.

EFFECTIVE DATE: 0901 UTC, November 1, 2001.

FOR FURTHER INFORMATION CONTACT: Brian Durham, ANM–520.7, Federal Aviation Administration, Docket No. 00–ANM–27, 1601 Lind Avenue SW., Renton, Washington, 98055–4056: telephone number: (425) 227–2527.

SUPPLEMENTARY INFORMATION:

History

On April 10, 2001, the FAA proposed to amend Title 14 Code of Federal Regulations, part 71 (14 CFR part 71) by revising Class E airspace at Lewistown, MT, in order to accommodate new RNAV SIAPs at Lewistown Municipal Airport, Lewistown, MT (66 FR 18578). This amendment provides Class E5 airspace at Lewistown, MT, to meet current criteria standards associated with the SIAP. Interested parties were invited to participate in the rulemaking proceeding by submitting written comments on the proposal. A revision to the legal description as written in the Notice for Proposed Rule Making (NPRM) was required to amend a small discrepancy in the proposed action in order to make the airspace easier to chart, and to correct an error in the magnetic declination for this location. This is considered an insignificant modification to the airspace description as the corrections did not change the dimension of the proposed airspace action described in the NPRM.

The Rule

This amendment to Title 14 Code of Federal Regulations, part 71 (14 CFR part 71) revises Class E airspace at Lewistown, MT, in order to accommodate a new SIAP to the Lewistown Municipal Airport, Lewistown, MT. This amendment revises Class E5 airspace at Lewistown, MT, to meet current criteria standards associated with the RNAV and SIAP. The FAA establishes Class E airspace where necessary to contain aircraft transitioning between the terminal and en route environments. This rule is designed to provide for the safe and efficient use of the navigable airspace and to promote safe flight operations under Instrument Flight Rules (IFR) at the Lewistown Municipal Airport and between the terminal and en route transition stages.

The area will be depicted on aeronautical charts for pilot reference. The coordinates for this airspace docket are based on North American Datum 83. Class E airspace areas extending upward from 700 feet or more above the surface of the earth, are published in Paragraph 6005, of FAA Order 7400.9H dated September 1, 2000, and effective September 16, 2000, which is incorporated by reference in 14 CFR 71.1. The Class E airspace designation listed in this document will be published subsequently in the Order.

The FAA has determined that this regulation only involves an established body of technical regulations for which frequent and routine amendments are necessary to keep them operationally current. It, therefore, (1) is not a ''significant regulatory action'' under Executive Order 12866; (2) is not a ''significant rule'' under DOT Regulatory Policies and Procedures (44 FR 11034; February 26, 1979); and (3) does not warrant preparation of a Regulatory Evaluation as the anticipated impact is so minimal. Since this is a routine matter that will only affect air traffic procedures and air navigation, it is certified that this rule, will not have a significant economic impact on a substantial number of small entities under the criteria of the Regulatory Flexibility Act.

List of Subjects in 14 CFR Part 71

Airspace, Incorporation by reference, Navigation (air).

Adoption of the Amendment

In consideration of the foregoing, the Federal Aviation Administration amends 14 CFR part 71 as follows:

PART 71—DESIGNATION OF CLASS A, CLASS B, CLASS C, CLASS D, AND CLASS E AIRSPACE AREAS; AIRWAYS; ROUTES; AND REPORTING POINTS

1. The authority citation for 14 CFR part 71 continues to read as follows:

Authority: 49 U.S.C. 106(g), 40103, 40113, 40120; E.O. 10854, 24 FR 9565, 3 CFR, 1959–1963 Comp., p. 389.

§ 71.1 [Amended]

2. The incorporation by reference in 14 CFR 71.1 of the Federal Aviation Administration Order 7400.9H, Airspace Designations and Reporting Points, dated September 1, 2000, and effective September 16, 2000, is amended as follows:

Paragraph 6005 Class E airspace areas extending upward from 700 feet or more above the surface of the earth.

* * * * *

ANM MT E5 Lewistown, MT [Revised]

Lewistown Municipal Airport
(Lat. 47°02′57″ N., long. 109°28′00″ W.)
Lewistown VORTAC
(Lat. 47°03′11″ N., long. 109°36′22″ W.)

That airspace extending upward from 700 feet above the surface within the 7.5-mile radius of the Lewistown Municipal Airport, and within 4.5 miles each side of the Lewistown VORTAC 269° radial extending from the 7.5-mile radius to 9.2 miles west of the VORTAC, and within 3.5 miles each side of the Lewistown VORTAC 089° radial from the 7.5-mile radius to 15.1 miles east of the VORTAC, and within 3.5 miles each side of the Lewistown VORTAC 255° radial extending from the 7.5-mile radius to 15.3 miles west of the VORTAC; that airspace extending upward from 1,200 feet above the surface bounded by a line beginning atlat. 47°11′33″ N., long. 110°06′30″ W.; to lat. 47°11′33″ N., long. 108°48′22″ W.; to lat. 46°43′40″ N., long. 108°48′22″ W.; to lat. 46°43′40″ N., long. 109°32′14″ W.; to lat. 46°32′19″ N., long. 109°32′14″ W.; to lat. 46°32′19″ N., long. 110°06′30″ W., to the point of origin; excluding that airspace within Federal Airways.

* * * * *

Issued in Seattle, Washington, on August 15, 2001.

Daniel A. Boyle,

Assistant Manager, Air Traffic Division, Northwest Mountain Region.

[FR Doc. 01–21822 Filed 8–28–01; 8:45 am]

BILLING CODE 4910–13–M

DEPARTMENT OF TRANSPORTATION

Federal Aviation Administration

14 CFR Part 71

[Airspace Docket No. 00–ANM–26]

Revision of Class E Airspace, Fort Bridger, WY

AGENCY: Federal Aviation Administration (FAA), DOT.

ACTION: Final rule.

SUMMARY: This action revises the Class E airspace at Fort Bridger, WY. Newly developed Area Navigation (RNAV) Standard Instrument Approach Procedure (SIAP) at the Fort Bridger Airport made this action necessary. Additional Class E 700 feet and 1200 feet controlled airspace, above the surface of the earth is required to contain aircraft executing the RNAV SIAP at Fort Bridger Airport.

EFFECTIVE DATE: 0901 UTC, September 6, 2001.

FOR FURTHER INFORMATION CONTACT: Brian Durham, ANM–520.7, Federal Aviation Administration, Docket No. 00–ANM–26, 1601 Lind Avenue SW, Renton, Washington 98055–4056; telephone number: (425) 227–2527.

SUPPLEMENTARY INFORMATION:

History

On April 10, 2001, the FAA proposed to amend Title 14 Code of Federal Regulations, part 71 (14 CFR part 71) by revising Class E airspace at Fort Bridger, WY, in order to accommodate new RNAV SIAPs at Fort Bridger, Airport, Fort Bridger, WY (66 FR 18577). This amendment provides Class E5 airspace at Fort Bridger, WY, to meet current criteria standards associated with the SIAP. Interested parties were invited to participate in the rulemaking proceeding by submitting written comments on the proposal. A revision to the legal description as written in the Notice for Proposed Rule Making (NPRM) was required for charting purpose to amend an error in the magnetic variation for this location. Therefore, the airspace was rotated 10° north in order to provide adequate airspace to contain the SIAPs identified in the proposed action. This is considered an insignificant modification to the airspace description as the dimension of the proposed airspace described in the NPRM did not change.

The Rule

This amendment to Title 14 Code of Federal Regulations, part 71 (14 CFR part 71) revises Class E airspace at Fort Bridger, WY, in order to accommodate a new SIAP to the Fort Bridger Airport, Fort Bridger, WY. This amendment revises Class E5 airspace at Fort Bridger, WY, to meet current criteria standards associated with the RNAV and SIAP. The FAA establishes Class E airspace where necessary to contain aircraft transitioning between the terminal and en route environments. This rule is designed to provide for the safe and efficient use of the navigable airspace and to promote safe flight operations under Instrument Flight Rules (IFR) at the Fort Bridger Airport and between the terminal and en route transition stages.

The area will depicted on aeronautical charts for pilot reference. The coordinates for this airspace docket are based on North American Datum 83. Class E airspace areas extending upward from 700 feet or more above the surface of the earth, are published in Paragraph 6005, of FAA Order 7400.9H dated September 1, 2000, and effective September 16, 2000, which is incorporated by reference in 14 CFR 71.1. The Class E airspace designation listed in this document will be published subsequently in the Order.

The FAA has determined that this regulation only involves an established body of technical regulations for which frequent and routine amendments are necessary to keep them operationally current. It, therefore, (1) is not a ''significant regulatory action'' under Executive Order 12866; (2) is not a ''significant rule'' under DOT Regulatory Policies and Procedures (44 FR 11034; February 26, 1979); and (3) does not warrant preparation of a Regulatory Evaluation as the anticipated impact is so minimal. Since this is a routine matter that will only affect air traffic procedures and air navigation, it is certified that this rule, will not have a significant economic impact on a substantial number of small entities under the criteria of the Regulatory Flexibility Act.

List of Subjects in 14 CFR Part 71

Airspace, Incorporation by reference, Navigation (air).

Adoption of the Amendment

In consideration of the foregoing, the Federal Aviation Administration amends 14 CFR part 71 as follows:

PART 71—DESIGNATION OF CLASS A, CLASS B, CLASS C, CLASS D, AND CLASS E AIRSPACE AREAS; AIRWAYS; ROUTES; AND REPORTING POINTS

1. The authority citation for 14 CFR part 71 continues to read as follows:

Authority: 49 U.S.C. 106(g), 40103, 40113, 40120; E.O. 10854, 24 FR 9565, 3 CFR, 1959–1963 Comp., p. 389.

§ 71.1 [Amended]

2. The incorporation by reference in 14 CFR 71.1 of the Federal Aviation Administration Order 7400.9H, Airspace Designations and Reporting Points, dated September 1, 2000, and effective September 16, 2000, is amended as follows:

Paragraph 6005 Class E airspace areas extending upward from 700 feet or more above the surface of the earth.

* * * * *

ANM WY E5 Fort Bridger, WY [Revised]

Fort Bridger Airport, WY
(Lat. 41°23′31″ N., long. 110°24′25″ W.)
Fort Bridger VORTAC
(Lat. 41°22′42″ N., long. 110°25′27″ W.)

That airspace extending upward from 700 feet above the surface within the 10-mile radius of the Fort Bridger Airport, and within 8 miles each side of the Fort Bridger VORTAC 047° radial extending from the 10-mile radius to 24 miles northeast of the VORTAC; that airspace extending upward from 1,200 feet above the surface within an area bounded by a line beginning at lat. 41°25′00″ N., long. 111°00′00″ W.; to lat. 42°00°00″ N., long. 109°57′00″ W.; to lat. 41°43′00″ N., long. 109°30′00″W.; to lat. 41°25′00″ N., long. 109°30′00″ W.; to lat. 41°08′00″ N., long. 110°30′00″ W.; to point of origin, excluding that airspace within Federal Airways and the Evanston, WY, and Kemmerer, WY, Class E airspace.

* * * * *

Issued in Seattle, Washington, on August 15, 2001.

Daniel A. Boyle,

Assistant Manager, Air Traffic Division, Northwest Mountain Region.

[FR Doc. 01–21820 Filed 8–28–01; 8:45 am]

BILLING CODE 4910–13–M

DEPARTMENT OF TRANSPORTATION

Federal Aviation Administration

14 CFR Part 71

[Airspace Docket No. 00–ANM–18]

Revision of Class E Airspace, Vernal, UT

AGENCY: Federal Aviation Administration (FAA), DOT.

ACTION: Final rule; correction.

SUMMARY: This action corrects a final rule published on July 23, 2001. The final rule was published past the cut-off date to meet the effective date of the airspace. Additionally, typographical errors in the airspace description has made this correction necessary. This action corrects the final rule by reflecting the new effective date and correction of text in the legal description.

EFFECTIVE DATE: 0901 UTC, November 1, 2001.

FOR FURTHER INFORMATION CONTACT: Brian Durham, ANM–520.7, Federal Aviation Administration, Docket No. 00–ANM–18, 1601 Lind Avenue S.W., Renton, Washington 98055–4056; telephone number: (425) 227–2527.

SUPPLEMENTARY INFORMATION: On July 23, 2001, the FAA published a final rule that revised Class E airspace at Vernal, UT (66 FR 38149). However, that action was published beyond the date required to meet the effective date for charting purposes, therefore, this action establishes the new effective date as November 1, 2001. Additionally, typographical errors in the legal description are in need of correction to properly reflect the intent of the action. This action corrects the effective date of the airspace and corrects typographical errors in the legal description.

Correction to Final Rule

Accordingly, pursuant to the authority delegated to me, the Class E airspace description at Vernal, UT, as published in the **Federal Register** on July 23, 2001 (66 FR 38149), (Federal Register Document No. 01–18236) is corrected as follows:

§ 71.1 [Corrected]

1. On page 38149, revise the **EFFECTIVE DATE**: to read ''0901 UTC, November 1, 2001''; in the legal description, line 11, delete the word ''to'' insert the word ''from'', should read ''from 1,200 feet above the surface''; in the legal description, line 16, insert ''lat.'' in front of ''39°43′00″N,'' should read ''lat. 39°43′00″N''.

Issued in Seattle, Washington, on August 15, 2001.

Daniel A. Boyle,

Assistant Manager, Air Traffic Division, Northwest Mountain Region.

[FR Doc. 01–21818 Filed 8–28–01; 8:45 am]

BILLING CODE 4910–13–M

DEPARTMENT OF TRANSPORTATION

Federal Aviation Administration

14 CFR part 71

[Airspace Docket No. 2001–ASW–14]

Revision of Class E Airspace; Springhill, LA

AGENCY: Federal Aviation Administration (FAA), DOT.

ACTION: Direct final rule; request for comments.

SUMMARY: This amendment revises the Class E airspace at Springhill, LA. The development of a Nondirectional Radio Beacon (NDB) Standard Instrument Approach Procedure (SIAP), at Springhill Airport, Springhill, LA, has made this rule necessary. This action is intended to provide adequate controlled airspace extending upward from 700 feet or more above the surface for Instrument Flight Rules (IFR) operations to Springhill Airport, Springhill, LA.

DATES: Effective 0901 UTC, December 27, 2001.

Comments must be received on or before October 15, 2001.

ADDRESSES: Send comments on the rule in triplicate to Manager, Airspace Branch, Air Traffic Division, Federal Aviation Administration, Southwest Region, Docket No. 2001–ASW–14, Fort Worth, TX 76193–0520. The official docket may be examined in the Office of the Regional Counsel, Southwest Region, Federal Aviation Administration, 2601 Meacham Boulevard, Room 663, Fort Worth, TX, between 9 a.m. and 3 p.m., Monday through Friday, except Federal holidays. An informal docket may also be examined during normal business hours at the Airspace Branch, Air Traffic Division, Federal Aviation Administration, Southwest Region, Room 414, Fort Worth, TX.

FOR FURTHER INFORMATION CONTACT: Donald J. Day, Airspace Branch, Air Traffic Division, Southwest Region, Federal Aviation Administration, Fort Worth, TX 76193–0520, telephone 817–222–5593.

SUPPLEMENTARY INFORMATION: This amendment to 14 CFR part 71 revises the Class E airspace at Springhill, LA. The development of a NDB SIAP, at Springhill Airport, Springhill, LA, has made this rule necessary. This action is intended to provide adequate controlled airspace extending upward from 700 feet or more above the surface for IFR operations to Springhill Airport, Springhill, LA.

Class E airspace designations are published in Paragraph 6005 of FAA

Order 7400.9H, dated September 1, 2000, and effective September 16, 2000, which is incorporated by reference in 14 CFR 71.1. The Class E airspace designation listed in this document will be published subsequently in the order.

The Direct Final Rule Procedure

The FAA anticipates that this regulation will not result in adverse or negative comment and therefore is issuing it as a direct final rule. A substantial number of previous opportunities provided to the public to comment on substantially identical actions have resulted in negligible adverse comments or objections. Unless a written adverse or negative comment, or a written notice of intent to submit an adverse or negative comment is received within the comment period, the regulation will become effective on the date specified above. After the close of the comment period, the FAA will publish a document in the **Federal Register** indicating that no adverse or negative comments were received and confirming the date on which the final rule will become effective. If the FAA does receive, within the comment period, an adverse or negative comment, or written notice of intent to submit such a comment, a document will be published in the **Federal Register**. This document may withdraw the direct final rule in whole or in part. After considering the adverse or negative comment, we may publish another direct final rule or publish a notice of proposed rulemaking with a new comment period.

Comments Invited

Although this action is in the form of a final rule and was not preceded by a notice of proposed rulemaking, comments are invited on this rule. Interested persons are invited to comment on this rule by submitting such written data, views, or argument as they may desire. Communications should identify the Rules Docket number and be submitted in triplicate to the address specified under the caption **ADDRESSES.** All communications received on or before the closing date for comments will be considered, and this rule may be amended or withdrawn in light of the comments received. Factual information that supports the commenter's ideas and suggestions is extremely helpful in evaluating the effectiveness of this action and determining whether additional rulemaking action is needed.

Comments are specifically invited on the overall regulatory, economic, environmental, and energy aspects of the rule that might suggest a need to modify the rule. All comments submitted will be available, both before and after the closing date for comments, in the Rules Docket for examination by interested persons. A report that summarizes each FAA–public contact concerned with the substance of this action will be filed in the Rules Docket.

Commenters wishing the FAA to acknowledge receipt of their comments submitted in response to this rule must submit a self-addressed, stamped postcard on which the following statement is made: ''Comments to Docket No. 2001ASW–14.'' The postcard will be date stamped and returned to the commenter.

Agency Findings

The regulations adopted herein will not have substantial direct effects on the States, on the relationship between the national government and the States, or on the distribution of power and responsibilities among the various levels of government. Therefore, it is determined that this final rule will not have federalism implications under Executive Order 13132.

Further, the FAA has determined that this regulation is noncontroversial and unlikely to result in adverse or negative comments and only involves an established body of technical regulations that require frequent and routine amendments to keep them operationally current. Therefore, I certify that this regulation (1) is not a ''significant regulatory action'' under Executive Order 12866; (2) is not a ''significant rule'' under DOT Regulatory Policies and Procedures (44 FR 11034; February 26, 1979); and (3) if promulgated, will not have a significant economic impact, positive or negative, on a substantial number of small entities under the criteria of the Regulatory Flexibility Act. Since this rule involves routine matters that will only affect air traffic procedures and air navigation, it does not warrant preparation of a Regulatory Flexibility Analysis because the anticipated impact is so minimal.

List of Subjects in 14 CFR part 71

Airspace, Incorporation by reference, Navigation (air).

Adoption of the Amendment

Accordingly, pursuant to the authority delegated to me, the Federal Aviation Administration amends 14 CFR part 71 as follows:

PART 71—DESIGNATION OF CLASS A, CLASS B, CLASS C, CLASS D, AND CLASS E AIRSPACE AREAS; AIRWAYS; ROUTES; AND REPORTING POINTS

1. The authority citation for 14 CFR part 71 continues to read as follows:

Authority: 49 U.S.C. 106(g), 40103, 40113, 40120; E.O. 10854; 24 FR 9565, 3 CFR, 1159–1963 Comp., p. 389.

§ 71.1 [Amended]

2. The incorporation by reference in 14 CFR 71.1 of the Federal Aviation Administration Order 7400.9H, *Airspace Designations and Reporting Points,* dated September 1, 2000, and effective September 16, 2000, is amended as follows:

Paragraph 6005: Class E. airspace areas extending upward from 700 feet or more above the surface of the earth.

* * * * *

ASW LA E5 Springhill, LA [Revised]

Springhill Airport, LA
(Lat. 32°58′59″ N., long. 93°24′39″ W.)
Springhill NDB
(Lat. 32°55′13″ N., long. 93°24′34″ W.)

That airspace extending upward from 700 feet above the surface within a 6.4-mile radius of Springhill Airport and within 3.2 miles each side of the 360° bearing of the Springhill NDB extending from the 6.4-mile radius to 10.9 miles north of the airport.

* * * * *

Issued in Fort Worth, Texas, on August 21, 2001.

Albert L. Viselli,

Acting Manager, Air Traffic Division, Southwest Region.

[FR Doc. 01–21826 Filed 8–28–01; 8:45 am]

BILLING CODE 4910–13–M

DEPARTMENT OF TRANSPORTATION

Federal Aviation Administration

14 CFR Part 71

[Docket No. FAA 2001–10002; Airspace Docket No. 00–ASO–25]

RIN 2120–AA66

Realignment of Jet Routes and VOR Federal Airways; FL

AGENCY: Federal Aviation Administration (FAA), DOT.

ACTION: Final rule.

SUMMARY: This action realigns two jet routes and four Very High Frequency Omnidirectional Range (VOR) Federal airways in the vicinity of Gainesville, FL, due to the relocation of the Gainesville, FL, Very High Frequency

Omnidirectional Range/Tactical Air Navigation (VORTAC) facility. This action also changes the name of the ''Gainesville VORTAC'' to ''Gators VORTAC.'' The FAA is taking this action because the previous VORTAC site was unusable due to recurring flooding. The VORTAC has been moved to a new location at the Gainesville, FL, Airport. This action will enable more efficient management of air traffic in the Gainesville, FL, area.

EFFECTIVE DATE: 0901 UTC, November 1, 2001.

FOR FURTHER INFORMATION CONTACT: Paul Gallant, Airspace and Rules Division, ATA–400, Office of Air Traffic Airspace Management, Federal Aviation Administration, 800 Independence Avenue, SW., Washington, DC 20591; telephone: (202) 267–8783.

SUPPLEMENTARY INFORMATION:

Background

The Gainesville, FL, VORTAC was removed from service on February 24, 1998, due to flooding at the facility site in the Paynes Prairie Reserve, FL. Water entered the VORTAC building and covered the access road with 2 to 3 feet of water. The Paynes Prairie Reserve site is prone to flooding and, therefore, the FAA has determined that the best course of action is to move the facility permanently to a new location at the Gainesville Airport, FL, approximately 8 miles north of the former site. The relocation of the VORTAC requires that segments of the affected jet routes and VOR Federal airways be redescribed.

The Rule

This action amends 14 CFR part 71 by revising the legal descriptions of two jet routes (J–55 and J–85) and four VOR Federal airways (V–157, V–441, V–537, and V–579), as a result of the relocation of the Gainesville, FL, VORTAC. The FAA is taking this action because the VORTAC facility has been moved to a new site approximately 8 miles north of its former location. The former site was deemed unsuitable due to recurring flooding which caused the VORTAC to be shutdown. In addition, this action changes the name of the ''Gainesville VORTAC'' to ''Gators VORTAC.'' This action makes minor amendments in the legal descriptions to align the affected jet route and VOR Federal airway segments with the new VORTAC site and reflect the new name of the facility. This action also restores a necessary navigational aid, and portions of the jet route and VOR Federal airway structures near Gainesville, FL, that have been unusable since February 1998.

The FAA obtained a new site, located at the Gainesville Regional Airport, to accommodate the move of VORTAC facility. Site preparation, construction of the building, and installation of the antenna and associated equipment are complete. In addition, required flight inspections have been performed. This rule is necessary to revise the descriptions of the affected VOR Federal airways and jet routes, as described above, to align them with the new geographical position of the Gators VORTAC.

The shutdown of the Gainesville VORTAC in 1998 resulted in the loss of an important National Airspace System navigational aid at a key, high volume juncture in north central Florida. As a result of this outage, a number of factors have impacted system efficiency and safety, including: increased air traffic controller workload due to the requirement to issue revised routings and air traffic control clearances; disruption of transition and arrival routes serving local terminal areas; and the loss of a heavily used navigational aid important to pilots flying under both instrument flight rules and visual flight rules (VFR). The VORTAC's proximity to numerous restricted areas, wherein activities hazardous to aviation are conducted, make it a particularly important aid to assist VFR pilots in avoiding those areas. Because this action is needed for safety and system efficiency reasons, the FAA finds that notice and public procedure under 5 U.S.C. 553(b) are impracticable and contrary to the public interest.

The FAA has determined that this regulation only involves an established body of technical regulations for which frequent and routine amendments are necessary to keep them operationally current. Therefore, this regulation: (1) is not a ''significant regulatory action'' under Executive Order 12866; (2) is not a ''significant rule'' under Department of Transportation (DOT) Regulatory Policies and Procedures (44 FR 11034, February 26, 1979); and (3) does not warrant preparation of a Regulatory Evaluation as the anticipated impact is so minimal. Since this is a routine matter that will only affect air traffic procedures and air navigation, it is certified that this rule, when promulgated, will not have a significant economic impact on a substantial number of small entities under the criteria of the Regulatory Flexibility Act.

Jet routes and VOR Federal airways are published in paragraphs 2004 and 6010(a), respectively, of FAA Order 7400.9H, dated September 1, 2000, and effective September 16, 2000, which is incorporated by reference in 14 CFR 71.1. The jet routes and VOR Federal airways listed in this document will be published subsequently in the Order.

List of Subjects in 14 CFR Part 71

Airspace, Incorporation by reference, Navigation (air).

Adoption of Amendment

In consideration of the foregoing, the Federal Aviation Administration amends 14 CFR part 71 as follows:

PART 71—DESIGNATION OF CLASS A, CLASS B, CLASS C, CLASS D, AND CLASS E, AIRSPACE AREAS; AIRWAYS; ROUTES; AND REPORTING POINTS

1. The authority citation for part 71 continues to read as follows:

Authority: 49 U.S.C. 106(g), 40103, 40113, 40120; E.O. 10854, 24 FR 9565, 3 CFR, 1959–1963 Comp., p. 389.

§ 71.1 [Amended]

2. The incorporation by reference in 14 CFR 71.1 of the Federal Aviation Administration Order 7400.9H, Airspace Designations and Reporting Points, dated September 1, 2000, and effective September 16, 2000, is amended as follows:

Paragraph 2004—Jet Routes.

* * * * *

J–55 [Revised]

From Dolphin, FL; INT Dolphin 331° and Gators, FL, 160°, radials; INT Gators 160° and Craig, FL, 192°, radials; Craig; INT Craig 004° and Savannah, GA, 197° radials; Savannah; Charleston, SC; Florence, SC; INT Florence 003° and Raleigh-Durham, NC, 224° radials; Raleigh-Durham; INT Raleigh-Durham 035° and Hopewell, VA, 234° radials; Hopewell; INT Hopewell 030° and Nottingham, MD, 174° radials. From Sea Isle, NJ; INT Sea Isle 050° and Hampton, NY, 223° radials; Hampton; Providence, RI; Boston, MA; Kennebunk, ME; Presque Isle, ME; to Mont Joli, PQ, Canada, excluding the portion within Canada.

* * * * *

J–85 [Revised]

From Dolphin, FL; INT Dolphin 331°and Gators, FL, 160° radials; Gators; Taylor, FL; Alma, GA; Colliers, SC; Spartanburg, SC; Charleston, WV; INT Charleston 357° and DRYER, OH, 172° radials; DRYER. The portion within Canada is excluded.

* * * * *

Paragraph 6010(a)—Domestic VOR Federal Airways.

* * * * *

V–157 [Revised]

From Key West, FL; INT Key West 038° and Dolphin, FL, 244° radials; Dolphin; INT Dolphin 331° and La Belle, FL, 113° radials; La Belle; Lakeland, FL; Ocala, FL; INT Ocala

346° and Taylor, FL, 170° radials; Taylor, FL; Waycross, GA; Alma, GA; Allendale, SC; Vance, SC; Florence, SC; Fayetteville, NC; Kinston, NC; Tar River, NC; Lawrenceville, VA; Richmond, VA; INT Richmond 039° and Patuxent, MD, 228° radials; Patuxent; Smyrna, DE; Woodstown, NJ; Robbinsville, NJ; INT Robbinsville 044° and LaGuardia, NY, 213° radials; LaGuardia; INT LaGuardia 032° and Deer Park, NY, 326° radials; INT Deer Park 326° and Kingston, NY, 191° radials; Kingston, NY; to Albany, NY. The airspace within R–4005, R–4006, R–4007A, and R–6602A is excluded.

* * * * *

V–441 [Revised]

From Melbourne, FL, via INT Melbourne 269° and Lakeland, FL, 081° radials; Lakeland; St. Petersburg, FL; INT St. Petersburg 011° and Ocala, FL, 208° radials; Ocala; Gators, FL; INT Gators 014° and Brunswick, GA, 223° radials; Brunswick; INT Brunswick 052° and Savannah, GA, 180° radials; to Savannah.

* * * * *

V–537 [Revised]

From Vero Beach, FL, via INT Vero Beach 318° and Orlando, FL, 140° radials; INT Orlando 140° and Melbourne, FL, 298° radials; INT Melbourne 298° and Ocala, FL, 145° radials; Ocala; Gators, FL; Greenville, FL; Moultrie, GA; Macon, GA.

* * * * *

V–579 [Revised]

From Lee County, FL; INT Lee County 310° and Sarasota, FL, 156° radials; Sarasota; St. Petersburg, FL; Gators, FL; Cross City, FL; Valdosta, GA; Tift Myers, GA; to Vienna, GA.

* * * * *

Issued in Washington, DC, on August 23, 2001.

Reginald C. Matthews,

Manager, Airspace and Rules Division.

[FR Doc. 01–21815 Filed 8–28–01; 8:45 am]

BILLING CODE 4910–13–P

DEPARTMENT OF TRANSPORTATION

Federal Aviation Administration

14 CFR Part 71

[Docket No. FAA–2001–10178; Airspace Docket No. 01–ANM–10]

RIN 2120–AA66

Amend Legal Description of Federal Airway V–611

AGENCY: Federal Aviation Administration (FAA), DOT.

ACTION: Final rule.

SUMMARY: This action amends the legal description of Federal Airway 611 (V–611). The legal description for V–611, detailed in a final rule published in the **Federal Register** on December 12, 1997, contained an inadvertent error in the segment between Billings, MT, and Lewistown, MT. This action corrects that error.

EFFECTIVE DATE: 0901 UTC, September 6, 2001.

FOR FURTHER INFORMATION CONTACT: Ken McElroy, Airspace and Rules Division, ATA–400, Office of Air Traffic Airspace Management, Federal Aviation Administration, 800 Independence Avenue, SW., Washington, DC 20591; telephone: (202) 267–8783.

SUPPLEMENTARY INFORMATION:

Background

The FAA is taking this action to correct the mileage listed in the description of V–611. VOR Federal airways are published in paragraph 6010 of FAA Order 7400.9H dated September 1, 2000, and effective September 16, 2000, which is incorporated by reference in 14 CFR 71.1. The corrected description for V–611 will be listed in this document and be published subsequently in the order.

Final Rule

This action amends Title 14 CFR part 71 (part 71) by amending the legal description of V–611, detailed in a final rule published in the **Federal Register** on December 12, 1997, due to an inadvertent error in the segment between Billings, MT, and Lewistown, MT. The FAA is taking this action to change the referenced ''38 miles,'' to read ''71 miles.'' This action corrects that error.

The FAA has determined that this regulation only involves an established body of technical regulations for which frequent and routine amendments are necessary to keep them operationally current. Therefore, this regulation: (1) Is not a ''significant regulatory action'' under Executive Order 12866; (2) is not a ''significant rule'' under DOT Regulatory Policies and Procedures (44 FR 11034; February 26, 1979); and (3) does not warrant preparation of a regulatory evaluation as the anticipated impact is so minimal. Since this is a routine matter that will only affect air traffic procedures and air navigation, it is certified that this rule, when promulgated, will not have a significant economic impact on a substantial number of small entities under the criteria of the Regulatory Flexibility Act.

VOR Federal airways are published in paragraph 6010 of FAA Order 7400.9H, dated September 1, 2000, and effectiveSeptember 16, 2000, which is incorporated by reference in 14 CFR 71.1. The VOR Federal airway listed in this document will be published subsequently in the order.

List of Subjects in 14 CFR Part 71

Airspace, Incorporation by reference, Navigation (air).

Adoption of the Amendment

In consideration of the foregoing, the Federal Aviation Administration amends 14 CFR part 71 as follows:

PART 71—DESIGNATION OF CLASS A, CLASS B, CLASS C, CLASS D, AND CLASS E AIRSPACE AREAS; AIRWAYS; ROUTES; AND REPORTING POINTS

1. The authority citation for 14 CFR part 71 continues to read as follows:

Authority: 49 U.S.C. 106(g), 40103, 40113, 40120; E.O. 10854, 24 FR 9565, 3 CFR, 1959–1963 Comp., p.389.

§ 71.1 [Amended]

2. The incorporation by reference in 14 CFR 71.1 of the Federal Aviation Administration Order 7400.9H, Airspace Designations and Reporting Points, dated September 1, 2000, and effective September 16, 2000, is amended as follows:

Paragraph 6010(a)—Domestic VOR Federal Airways

* * * * *

V–611

From Newman, TX, via INT Newman 286° and Truth or Consequences, NM, 159° radials; Truth or Consequences; INT Truth or Consequences 028° and Socorro, NM, 189° radials; Socorro; Albuquerque, NM; INT Albuquerque 036° and Santa Fe, NM, 245° radials; Santa Fe; Las Vegas, NM; Cimarron, NM; Pueblo, CO; Black Forest, CO; INT Black Forest 036° and Gill, CO, 149° radials; Gill; Cheyenne, WY; Muddy Mountain, WY; 5 miles, 45 miles 71 MSL, Crazy Woman, WY; Sheridan, WY; Billings, MT; 71 miles 72 MSL, INT Billings 347° and Lewistown, MT, 104° radials; Lewistown; INT Lewistown 322° and Havre, MT, 226° radials; to Havre.

* * * * *

Issued in Washington, DC, on August 20, 2001.

Reginald C. Matthews,

Manager, Airspace and Rules Division.

[FR Doc. 01–21817 Filed 8–28–01; 8:45 am]

BILLING CODE 4910–13–P

DEPARTMENT OF TRANSPORTATION

Federal Aviation Administration

14 CFR Part 73

[Docket No. FAA–2001–10285; Airspace Docket No. 01–ASO–8]

RIN 2120–AA66

Change of Using Agency for Restricted Areas R–3008A, R–3008B, R–3008C, and R–3008D; Grand Bay Weapons Range, GA

AGENCY: Federal Aviation Administration (FAA), DOT.

ACTION: Final rule.

SUMMARY: This action changes the name of the using agency for Restricted Areas R–3008A, R–3008B, R–3008C, and R–3008D, Grand Bay Weapons Range, GA, from the ''347th Fighter Wing'' to the ''347th Rescue Wing.'' This change is required due to the U.S. Air Force's realignment of missions at Moody Air Force Base (AFB), GA, which is the sponsor of the Grand Bay Weapons Range. This change is administrative only to reflect the proper host unit at the base. The change will not affect the current restricted area boundaries, altitudes, time of designation, or the activities conducted within the areas.

EFFECTIVE DATE: 0901 UTC, November 1, 2001.

FOR FURTHER INFORMATION CONTACT: Paul Gallant, Airspace and Rules Division, ATA–400, Office of Air Traffic Airspace Management, Federal Aviation Administration, 800 Independence Avenue, SW., Washington, DC 20591; telephone (202) 267–8783.

SUPPLEMENTARY INFORMATION:

Background

The U.S. Air Force is realigning the missions at Moody AFB, GA. In conjunction with this change, the Air Force has redesignated host unit for the base as the 347th Rescue Wing. The 347th Rescue Wing serves as the sponsoring unit and scheduling activity for Restricted Areas R–3008A, R–3008B, R–3008C, and R–3008D.

The Rule

This action amends 14 CFR part 73 by changing the name of the using agency for Restricted Areas R–3008A, R–3008B, R–3008C, and R–3008D, Grand Bay Weapons Range, GA, from ''U.S. Air Force, 347th Fighter Wing, Moody AFB, GA,'' to ''U.S. Air Force, 347th Rescue Wing, Moody AFB, GA.'' This administrative change will not alter the boundaries, altitudes, time of designation, or activities conducted within the restricted areas; therefore, I find that notice and public procedure under 5 U.S.C. 553(b) are unnecessary.

Section 73.30 of part 73 was republished in FAA Order 7400.8H, dated September 1, 2000.

This regulation is limited to an established body of technical regulations for which frequent and routine amendments are necessary to keep them operationally current. Therefore, this regulation: (1) Is not a ''significant regulatory action'' under Executive Order 12866; (2) is not a ''significant rule'' under DOT Regulatory Policies and Procedures (44 FR 11034; February 26, 1979); and (3) does not warrant preparation of a regulatory evaluation as the anticipated impact is so minimal. It has been determined that this is a routine matter that will only affect air traffic procedures and air navigation, it is certified that this rule, when promulgated, will not have a significant economic impact on a substantial number of small entities under the criteria of the Regulatory Flexibility Act.

Environmental Review

This action is a minor administrative change to amend the designated using agency of existing restricted areas. There are no changes to air traffic control procedures or routes as a result of this action. Therefore, this action is not subject to environmental assessments and procedures in accordance with FAA Order 1050.1D, ''Policies and Procedures for Considering Environmental Impacts,'' and the National Environmental Policy Act of 1969.

List of Subjects in 14 CFR Part 73

Airspace, Navigation (air).

Adoption of the Amendment

In consideration of the foregoing, the Federal Aviation Administration amends 14 CFR part 73, as follows:

PART 73—SPECIAL USE AIRSPACE

1. The authority citation for part 73 continues to read as follows:

Authority: 49 U.S.C. 106(g), 40103, 40113, 40120; E.O. 10854, 24 FR 9565, 3 CFR, 1959–1963 Comp., p. 389.

§ 73.30 [Amended]

2. § 73.30 is amended as follows:

* * * * *

R–3008A Grand Bay Weapons Range, GA [Amended]

By removing ''Using agency. U.S. Air Force, 347th Fighter Wing, Moody AFB, GA'' and substituting ''Using agency. U.S. Air Force, 347th Rescue Wing, Moody AFB, GA'' in its place.

R–3008B Grand Bay Weapons Range, GA [Amended]

By removing ''Using agency. U.S. Air Force, 347th Fighter Wing, Moody AFB, GA'' and substituting ''Using agency. U.S. Air Force, 347th Rescue Wing, Moody AFB, GA'' in its place.

R–3008C Grand Bay Weapons Range, GA [Amended]

By removing ''Using agency. U.S. Air Force, 347th Fighter Wing, Moody AFB, GA'' and substituting ''Using agency. U.S. Air Force, 347th Rescue Wing, Moody AFB, GA'' in its place.

R–3008D Grand Bay Weapons Range, GA [Amended]

By removing ''Using agency. U.S. Air Force, 347th Fighter Wing, Moody AFB, GA'' and substituting ''Using agency. U.S. Air Force, 347th Rescue Wing, Moody AFB, GA'' in its place.

* * * * *

Issued in Washington, DC, on August 23, 2001.

Reginald C. Matthews,

Manager, Airspace and Rules Division.

[FR Doc. 01–21816 Filed 8–28–01; 8:45 am]

BILLING CODE 4910–13–P

COMMODITY FUTURES TRADING COMMISSION

17 CFR Part 39

RIN 3038–AB66

A New Regulatory Framework for Clearing Organizations

AGENCY: Commodity Futures Trading Commission.

ACTION: Final rulemaking.

SUMMARY: The Commodity Futures Trading Commission (''Commission'' or ''CFTC'') is promulgating final rules to implement provisions of the Commodity Futures Modernization Act of 2000 governing derivatives clearing organizations. The rules apply to derivatives clearing organizations that are required to be registered, or which voluntarily apply to register, with the Commission.

EFFECTIVE DATE: October 29, 2001.

FOR FURTHER INFORMATION CONTACT: Alan L. Seifert, Deputy Director, Division of Trading and Markets or Lois J. Gregory, Special Counsel, Division of Trading and Markets, Commodity Futures Trading Commission, Three Lafayette Centre, 1155 21st Street, NW., Washington, DC 20581. Telephone (202) 418–5260 or e-mail ASeifert@cftc.gov. or LGregory@cftc.gov.

SUPPLEMENTARY INFORMATION:

I. Background

On May 14, 2001, the Commission published for comment proposed part 39 of its regulations to implement Section 5b of the Commodity Exchange Act (''Act''), as added by the Commodity Futures Modernization Act of 2000 (''CFMA''),[1] governing derivatives clearing organizations.[2] Section 5b(a) requires that contracts of sale of a commodity for future delivery, options on such contracts, and options on a commodity be cleared only by a derivatives clearing organization (''DCO'') registered with the Commission,[3] unless the contracts or options are in: (i) commodities excluded under the Act, (ii) commodities exempted under the Act, or (iii) security futures products cleared by a securities clearing agency. With the exception of security futures products, which may be cleared by a securities clearing agency,[4] contracts traded on a designated contract market, if cleared, must be cleared by a DCO.[5] Agreements, contracts and transactions in excluded or exempted commodities that are traded on a derivatives transaction execution facility, if cleared, may be cleared through clearing organizations other than DCOs.[6] However, a clearing organization that clears these contracts may voluntarily apply, pursuant to section 5b(b) of the Act, to register with the Commission as a DCO. A DCO may clear other contracts, agreements, or transactions, including, but not limited to, certain over-the-counter (''OTC'') derivative instruments referenced in section 5b(b) of the Act, and others, such as transactions in spot and forward contracts.

To be registered as a DCO, an applicant must demonstrate that it complies with fourteen core principles set forth in the CFMA. Part 39 stipulates the form and provides guidance for what should be included in applications for DCO registration, and sets forth procedures for processing such applications. It also addresses ongoing compliance by DCOs with the core principles and other provisions of the Act and regulations, the enforceability of contracts cleared on DCOs, and fraud. Part 39 does not apply to the execution of transactions cleared by DCOs; its provisions apply only to the clearing of transactions by DCOs.

The Commission received three comment letters on proposed part 39.[7] Although the Commission has made various changes in response to the comments as discussed below, the final rules do not differ significantly from those that were proposed.

II. Final Part 39

A. Application and Approval Procedures

As did the proposed rule, final rule 39.1 provides that part 39 applies to any DCO that is registered, is required to be registered, or which voluntarily applies to be registered with the Commission. The Commission agrees with comments suggesting that grandfathered DCOs also be specifically included in this scope provision and has accordingly amended it to include DCOs that are ''deemed to be registered,'' which is the language used in the CFMA to refer to grandfathered DCOs.[8] Thus, the final part 39 rules apply to any DCO, as defined under section 1a(9) of the Act,[9] which is registered or deemed to be registered with the Commission, is required to become so registered, or which voluntarily seeks to become so registered. Final rule 39.3 provides that an organization meeting all requirements is ''deemed registered'' sixty days after receipt of an application unless notified otherwise.[10]

Rule 39.3 also sets forth the requirements for registration. As proposed, the rule required that an applicant meet the definition of a DCO provided by section 1a(9) of the Act, which in turn, requires that the entity perform certain functions. As noted by BOTCC, however, an applicant that has not been grandfathered pursuant to section 5b(d) of the Act will not have performed the activities envisioned by that definition. The Commission has modified the rule, therefore, to state that an applicant need only represent that it will operate in accordance with the definition of a DCO contained in section 1a(9) of the Act.[11]

Other requirements of rule 39.3 include submission by an applicant of its rules and a demonstration that the applicant is able to satisfy the core principles of the Act to the extent that its ability to do so is not self evident from the applicant's rules. As proposed, rule 39.3 also would have required applicants to submit ''any'' agreements with third parties that would enable the applicant to comply with the core principles and descriptions of ''any'' system test procedures, tests conducted or test results. BOTCC commented that ''[t]hese materials can be voluminous. More importantly, these materials frequently will contain trade secrets of the submitting party or be subject to detailed confidentiality procedures established by third-party system providers and other vendors.'' [12] BOTCC therefore recommended that the rule ''be amended to require an applicant only to submit such information as is necessary to demonstrate the applicant's compliance with core principles.'' [13] The Commission has modified the rule to clarify that the agreements and descriptions of system tests referred to in rule 39.3 that must be submitted are those that will enable the applicant to comply, or demonstrate the applicant's ability to comply, with the core principles.[14]

[1] *See* Appendix E of Pub.L. 106–554, 114 Stat. 2763 (2000).

[2] 66 FR 24308.

[3] For purposes of this release, use of the term ''derivatives clearing organization'' means a DCO registered, deemed to be registered, or required to be registered, with the Commission pursuant to section 5b of the Act.

[4] Security futures products traded on a national securities exchange that is notice-registered with the CFTC as a designated contract market must be cleared by a securities clearing agency registered under the Securities Exchange Act of 1934. Securities Exchange Act section 17A(b)(1). Security futures products traded on a contract market that is notice-registered with the SEC may be cleared by either a DCO or a securities clearing agency. *See* section 5b of the Act.

[5] However, the Commission will consider requests for other types of clearing arrangements pursuant to its exemptive authority under section 4(c) of the Act.

[6] This includes excluded or exempted contracts traded on a derivatives transaction execution facility pursuant to any of the sub-provisions of section 5a of the Act.

[7] Comment letters (CL) were received from the Board of Trade Clearing Corporation (''BOTCC''), the Chicago Mercantile Exchange (''CME''), and the International Swaps and Derivatives Association (''ISDA'').

[8] Section 5b(d) provides that a DCO ''shall be deemed to be registered'' if it acts as the clearing organization for a board of trade that was designated as a contract market prior to the date of enactment of the CFMA. *See* BOTCC CL at 2.

[9] As noted in the proposing release, an organization need not perform a direct credit enhancement function in order to be a DCO under the Act. *See* section 1a(9)(ii) (providing that the term DCO includes entities that provide for the settlement or netting of agreements, contracts, or transactions executed by participants in the DCO). Accordingly, and in response to BOTCC's request for clarification, the term ''clear'' (and all forms of the verb) is meant to include these other services. *See* BOTCC CL at 6. An organization that intends to provide settlement or other clearing-type services without accompanying credit enhancement must still demonstrate compliance with all section 5b core principles to obtain unconditional registration as a DCO. The Commission may grant DCO registration with conditions when and as appropriate.

[10] The Act does not include an express time limit for Commission consideration of applications to become registered DCOs.

[11] An applicant's representation of how it will operate refers to the information the applicant must include in its application describing the operations and functions the applicant will undertake as a registered DCO.

[12] BOTCC CL at 3.

[13] *Id.*

[14] This information is essential to the Commission's oversight of DCOs. However, trade secrets and other proprietary information may be

Continued

If an applicant does not meet the registration requirements, Commission staff will inform the applicant of the shortcomings and notify it that review is being terminated under part 39 and will continue under section 6 of the Act. Within ten days of being notified, the applicant may ask the Commission either to register it or to commence registration denial proceedings. An applicant also may withdraw its application.

An applicant may request that the Commission approve any of its rules pursuant to the procedures and timeframes for approval provided by rule 40.5. An applicant may request approval of one or more of its rules at the time it makes its initial application, or thereafter. Under section 5b(c)(3) of the Act, an applicant also may request that the Commission issue an order concerning whether a rule or practice of the applicant is the least anticompetitive means of achieving the objectives, purposes, and policies of the Act. In considering any requests for such orders, the Commission will review the analysis submitted by the applicant with respect to the rule or practice in question and will apply section 15(b) of the Act in a manner consistent with its previous application of section 15 to contract markets.

B. Existing Derivatives Clearing Organizations

Section 5b(d) of the Act provides that existing DCOs shall be deemed to be registered with the Commission to the extent that the DCO clears agreements, contracts, or transactions for a board of trade that had been designated by the Commission as a contract market for such agreements, contracts, or transactions prior to enactment of the CFMA. In response to comments, the Commission clarifies that clearing organizations that are grandfathered under this provision need not apply to the Commission to clear new contracts that were not cleared before the date of enactment of the CFMA.[15]

C. Derivatives Clearing Organizations

1. Exemption

As proposed, rule 39.2 provided that a DCO and the clearing of transactions on a DCO would be exempt from all Commission regulations except for those contained in proposed parts 39 and 40,[16] and certain select regulations relating to, for example, the segregation of customer funds and recordkeeping.[17] In response to comments noting that only subsection (b) of Commission regulation 1.38 is relevant to the activities of DCOs, the Commission has amended proposed rule 39.2 to reserve only that subsection.[18] The Commission also has amended proposed rule 39.2 to delete reservation of the option anti-fraud provisions in Commission regulation 33.10, because part 39 contains its own anti-fraud rule, which applies to the activity of clearing option contracts otherwise covered by regulation 33.10.[19] Parts 15 through 18 of the Commission's regulations continue to be reserved in final rule 39.2 to the extent they are applicable. These provisions are reserved in connection with the Commission's authority to make special calls pursuant to rule 39.5(d).[20]

Final rule 39.2 continues to provide that the reserved regulations apply to DCOs as though they were set forth in part 39 and included specific reference to DCOs. The Commission agrees with BOTCC's suggestion that this drafting convention be extended so that references in the regulations to the terms ''clearinghouse'' and ''clearing organization'' shall be deemed to mean a ''derivatives clearing organization,'' and has modified rule 39.2 accordingly.[21]

2. Rules

Rule 39.4 provides that a DCO may request that the Commission approve any of its rules either prior to or after implementation of the rule(s).[22] Such requests will be processed under the applicable procedures of part 40. As provided by part 40 and rule 39.4, any new or amended rule not voluntarily submitted to the Commission for approval must be submitted with a certification that the new rule or amendment complies with the Act. Also as provided by part 40 and added in final rule 39.4, a DCO that accepts for clearing a new product that is not traded on a designated contract market or a registered derivatives transaction execution facility must submit to the Commission any rules establishing the terms and conditions of the product that make it acceptable for clearing with a certification that the clearing of the product and the rules and terms and conditions comply with the Act and the rules thereunder. A DCO also may request, at any time, that the Commission issue an order concerning whether any of its rules or practices is the least anticompetitive means of achieving the objectives, purposes, and policies of the Act. As with such requests accompanying applications, the Commission will review the analysis submitted with respect to the rule or practice in question and will apply section 15(b) of the Act in a manner consistent with its previous application of section 15 to contract markets.

3. Information

Rule 39.5 allows the Commission to request certain information from DCOs in order to carry out its oversight function. For example, rule 39.5(b) allows the Commission to ask a DCO to submit, in writing, information deemed necessary to demonstrate that the DCO is operating in compliance with one or more of the core principles. Such a request is an informal method of resolving compliance issues and is intended to be a preferable alternative to the more formal procedures of section 5c(d) of the Act. As proposed in rule 39.3(e), the Commission has delegated the authority to request information under 39.5(b) to specified staff. This delegation is consistent with the delegation of authority in rule 37.8(d) regarding information relating to transactions on derivatives transaction execution facilities and in rule 40.7(a)(1) regarding product and rule amendments and supplements. The authority under rule 39.5(b) is an important complement to the streamlined and reduced requirements of the CFMA. In response to concerns expressed by CME, the

entitled to protection under the Freedom of Information Act. *See* rule 39.3(a)(7). As has been the case in the past, the staff is prepared to work with applicants to arrange reasonable accommodations to address concerns about the relevance of disclosures or the volume of submissions.

[15] *See* CME CL at 1. They would, however, be required under section 5c(c) of the Act to provide certification that the clearing of the new contract(s) complies with the Act and the Commission's regulations. Self-certification procedures for products are provided under rule 40.2.

[16] Part 40 of the regulations, which contains provisions common to contract markets, derivatives transactions execution facilities and DCOs, was adopted by the Commission on August 1, 2000. *See* 66 FR 42256 (August 10, 2001).

[17] This included Commission Regulation 1.31, which was updated and amended by the Commission in 1999 to provide broad, flexible performance standards for recordkeeping. It is substantially similar to the recordkeeping requirements maintained by the Securities and Exchange Commission. Notwithstanding the basic non-mandatory nature of the guidance provided in the appendix to part 39, the Commission clarifies that, with respect to Core Principle K, a DCO's recordkeeping must satisfy the performance standards in Regulation 1.31 in order to demonstrate compliance with the core principle, because that rule has been reserved.

[18] *See* BOTCC CL at 2.

[19] *Id.*

[20] *Id. See generally* the discussion regarding information needed by the Commission to fulfill its oversight function under section II. C. 3., *infra.*

[21] BOTCC CL at 2.

[22] The Act limits a registered entity seeking approval to request approval only ''prior'' to implementation. The Commission is using its section 4(c) exemptive authority with respect to this provision to provide DCOs with greater procedural flexibility.

Commission affirms its intent that rule 39.5 be used only when there is a reasonable basis upon which to request information about the ongoing compliance by a DCO with one or more core principles.[23]

Rule 39.5(c) requires that large trader information be provided to the Commission by futures commission merchants, clearing members, and foreign brokers. In response to comments, the Commission does not believe it is necessary to expand this list to include foreign traders or participants in a DCO, as in each instance, the report would be filed through an entity included on the list. Rule 39.5(d) authorizes the Commission to make special calls for information concerning customer accounts from futures commission merchants, clearing members, or foreign brokers. Commission staff will limit special calls as needed to carry out the Commission's oversight function with respect to DCOs and their operations.

4. Enforceability

As proposed, rule 39.6 provided that a contract or transaction cleared pursuant to the rules of a DCO shall not be void, voidable, subject to rescission, or otherwise invalidated or rendered unenforceable as a result of a violation by the DCO of the provisions of section 5b of the Act or part 39, or as a result of any Commission proceeding to alter, supplement, or require the DCO to adopt a specific rule or procedure, or refrain from taking a specific action. In its comment letter, ISDA stated that the reference to contracts or transactions ''cleared pursuant to the rules'' may create ambiguity and uncertainty in that it does not clearly cover contracts or transactions cleared by non-registered DCOs. ISDA suggested clarifying the applicability of the enforceability provision by substituting the words ''submitted to a derivatives clearing organization for clearance'' for ''cleared pursuant to the rules.'' The Commission has considered ISDA's comment and has amended final rule 39.6 in this manner to clarify the rule's applicability to DCOs that are required to register, as well as those that are already registered, with the Commission. The Commission believes this clarification is appropriate in that enforceability of contracts extends not only to DCOs properly registered with the Commission, but to those that should be, but are not, registered with the Commission and consequently are in violation of Section 5b(a) of the Act.

The Commission's substitution of the words ''submitted to a derivatives clearing organization for clearance'' in final rule 39.6 also addresses BOTCC's suggestion that the Commission clarify that the enforceability provision applies to cleared transactions and to those submitted for clearing, but for which the clearing process was delayed or interrupted.[24] In addition, in response to BOTCC comments, the Commission has modified proposed rule 39.6 to apply to violations of any of the provisions of the Act or of the Commission's regulations, rather than to violations of section 5b of the Act or part 39 of the regulations only.[25]

5. Anti-fraud

As proposed, rule 39.7 prohibited fraudulent actions by persons ''in or in connection with'' the clearing of transactions on a DCO. Both CME and ISDA commented that the proposed rule could be interpreted to apply to fraud with respect to aspects of a transaction cleared by a DCO other than the activity of clearing. ISDA asserted that the rule should be narrowly construed to mean fraud specific to the clearing function and not in connection with the solicitation or execution of a transaction merely because the transaction is also cleared.[26] CME stated that the rule could be read to apply to the execution of transactions cleared by a DCO even if the transaction would otherwise be outside the Commission's jurisdiction.[27] CME argued that participants in derivatives markets unregulated by the CFTC will arrange to have such transactions cleared by non-DCO clearing organizations if there appears to be any chance that rule 39.7 could subject their transactions to CFTC jurisdiction.[28]

In response to these comments, the Commission reaffirms that transactions that are outside the CFTC's jurisdiction do not become subject to its jurisdiction simply because they are cleared by a DCO. Thus, rule 39.7 does not govern, cover, or relate to the solicitation or execution of transactions. This is consistent with rule 39.6, which provides that a violation of any Commission regulation, which would include rule 39.7, does not affect the enforceability of transactions submitted for clearance on a DCO, and with the CFMA's separate treatment of clearing from the transaction facilities for which transactions are cleared.

BOTCC also requested confirmation that proof of scienter is needed for violations of rule 39.7.[29] The Commission confirms that violations of the anti-fraud provision do require proof of scienter.[30]

D. Application Guidance and Compliance With Core Principles

In order to become registered, an applicant must demonstrate the ability to comply with the core principles for DCOs set forth in Section 5b of the Act. In order to remain registered, a DCO must continue to comply with the core principles. An applicant or DCO has reasonable discretion in establishing the manner in which it demonstrates its ability to comply with the core principles or its ongoing compliance. Appendix A to part 39 provides guidance that applicants and DCOs can use to demonstrate initial ability to comply and continuing compliance with the core principles. The guidance illustrates the manner in which a clearing organization may meet a core principle and is not intended to be a mandatory checklist.

The proposed guidance for Core Principle B—Financial Resources—addressed the ''amount'' of resources dedicated to supporting the clearing function. As proposed, this guidance referred to the amount of resources available and their sufficiency to assure that no break in clearing operations will occur in a variety of market conditions. In response to comments, point 1 of the guidance has been modified to refer to the ''level'' rather than the ''amount'' of resources and assurance that no ''material adverse'' break in clearing

[23] *See* CME CL at 2–3. In order to perform properly its oversight function with respect to the core principles, such a request may include information related to the DCO's broader business as a clearing organization in addition to its business as a registered DCO, because the ability to fulfill the latter function may potentially be affected by the former. *See* BOTCC CL at 5.

[24] *See* BOTCC CL at 6, n.9. BOTCC notes that this distinction could be important in circumstances where the insolvency of a clearing member or DCO participant interferes with normal clearing processes.

[25] *See* BOTCC CL at 6.

[26] *See* ISDA CL at 3–4.

[27] *See* CME CL at 1–2.

[28] *See* CME CL at 2.

[29] *See* BOTCC CL at 6.

[30] This is consistent with other anti-fraud provisions such as Section 4(b) of the Act, Commission regulation 30.9 (concerning fraud involving foreign futures contracts) and Commission regulation 33.10 (concerning fraud in connection with domestic exchange-traded option transactions). The Commission has held that Regulations 30.9 and 33.10 require proof of scienter. *See, e.g.*, In Re Staryk [1996–1998 Transfer Binder] Comm. Fut. L. Rep. (CCH) ¶ 27,206 at 45,810 (CFTC Dec. 18, 1997). The Commission also removed the words ''other'' and ''thereof'' twice each from rule 39.7. These words do not serve a useful purpose in the rule and their removal does not change the meaning or application of the rule, but does make it consistent with rule 1.1 recently adopted by the Commission. *See* 66 FR 42256 (August 10, 2001). Rule 1.1 concerns fraud in or in connection with transactions in foreign currency subject to the Act.

operations will occur.[31] Point 2 continues to refer to the ''nature'' of the resources. The Commission recognizes that it may be difficult to quantify resource allocations. Thus, in the final guidance it suggests that applicants or DCOs may provide information describing the level and nature of resources available to support the clearing function, rather than the specific or exact amount of resources available at any one time. In addition, the Commission recognizes that certain temporary breakdowns that do not materially affect the clearing function do and will occur. The Commission notes that the guidance relevant to this issue addresses the allocation of sufficient resources to prevent breakdowns of a serious and fundamental nature that would materially, adversely affect an applicant's or DCO's ability to fulfill its basic clearing services.[32] Furthermore, reference in the guidance to a credit enhancement function is not intended to imply a requirement that a DCO provide that function.[33]

Point 2 of the proposed guidance under Core Principle B—Financial Resources—addressed the updating and reporting of certain financial information. With respect to public disclosure, this guidance has been amended so as to apply only ''when appropriate.'' Information is not expected to be made publicly available if it is not appropriate to do so, as in the case of certain confidential and proprietary financial and commercial information.[34] The proposed guidance on Core Principle L—Public Information—also referred to public disclosure and concerned rules and operating procedures governing clearing and settlement systems. This guidance has not been altered from its proposed form and is consistent with guidance regarding public disclosure of similar material by contract markets or applicants therefor.[35]

As proposed, point 3 of the guidance for Core Principle C—Participant and Product Eligibility—suggested that an applicant or DCO describe how it would establish criteria for the transactions it will clear, and point 2 of the guidance for Core Principle D—Risk Management—suggested providing a description of how appropriate forms and levels of collateral would be established and collected. In response to comments, these points have been reworded to clarify that the information suggested as relevant to demonstrating compliance relates to the different factors the applicant or DCO will consider in carrying out its responsibilities, rather than its internal procedures.[36] In addition, the words ''where applicable'' have been added to subpart (b) of point 2 of the guidance for Core Principle D, referring to sufficient resources to perform the central counterparty function, in recognition of the fact that the definition of DCO does not require the performance of a direct credit enhancement function.[37]

Point 1 of the guidance under Core Principle G—Default Rules and Procedures—has been revised to suggest more clearly that relevant information includes how the applicant or DCO defines default, what steps would be taken in the event of a default, and steps that would be taken in situations related to, but which may not constitute, default.[38] Point 5 of the guidance for Core Principle G concerning default rules and procedures suggests that applicants or DCOs address rules and procedures regarding priority of customer accounts over proprietary accounts of defaulting members/participants. In response to comments, the Commission clarifies that this is not meant, and should not be interpreted, to imply that customer priority procedures are a necessary element in the structure of all DCOs.[39] Rules and procedures regarding priority of customer accounts are only relevant with respect to a DCO that directly or indirectly clears contracts for one or more accounts that are customer accounts in the particular market for which it is clearing, while also clearing non-customer or proprietary accounts.

Point 2 of the proposed guidance for Core Principle I—System Safeguards—suggested that applicants or DCOs provide confirmation that system testing and review will be performed or assessed by a qualified independent professional. In response to comments, the Commission has clarified that a qualified independent professional need not necessarily be external to the organization to be considered independent.[40] An internal reviewer may qualify as independent if he/she is independent of the activities being audited and is organizationally able to render an objective assessment.

III. Section 4(c) Findings

Section 4(c) of the Act provides that, in order to promote responsible economic or financial innovation and fair competition, the Commission may by rule, regulation or order exempt any class of agreements, contracts, or transactions, either unconditionally or on stated terms or conditions, from any of the requirements of any provision of the Act (except certain provisions governing a group or index of securities and security futures products). As relevant here, when granting an exemption pursuant to section 4(c), the Commission must find that the exemption would be consistent with the public interest.

The Commission is using its section 4(c) exemptive authority here to provide registered entities with greater procedural flexibility than is contained in the Act. Pursuant to rule 39.4, a DCO may request that the Commission approve its rules or rule amendments prior to their implementation, or any time thereafter, notwithstanding the Act's limitation on registered entities seeking approval to do so only prior to implementation.[41] The Commission believes this exercise of exemptive authority should provide DCOs with greater procedural flexibility. Accordingly, the Commission finds under section 4(c) of the Act that the exemption is consistent with the public interest. The Commission also notes that it will consider, under its section 4(c) exemptive authority, requests by designated contract markets to use the clearing services of organizations other than DCOs registered with the Commission.

IV. Consideration of Costs and Benefits

Section 15 of the Act, as amended by section 119 of the CFMA, requires the Commission to consider the costs and benefits of its action before promulgating a new regulation under the Act. The Commission has applied the cost-benefit provisions of section 15 in this rulemaking and understands that, by its terms, section 15 as amended does not require the Commission to quantify the costs and benefits of a new regulation or to determine whether the benefits of the proposed regulation outweigh its costs. Rather, section 15 simply requires the Commission to ''consider the costs and benefits'' of its action.

The amended section 15 further specifies that costs and benefits shall be

[31] *See* BOTCC CL at 7.

[32] *See* BOTCC CL at 7.

[33] *See* ISDA CL at 4; *see also* footnote 9, supra.

[34] *See* BOTCC CL at 7.

[35] *See* the application guidance for designation criterion 7 of section 5(b) of the Act and the guidance on, and acceptable practices for, complying with core principles 7 and 10 of section 5(d) of the Act; *see also* BOTCC CL at 7.

[36] *See* BOTCC CL at 8.

[37] *See* footnote 9 and text accompanying footnote 33.

[38] *See* BOTCC CL at 8.

[39] *See* ISDA CL at 4–5.

[40] *See* BOTCC CL at 8.

[41] *See* section 5c(c)(2) of the Act.

evaluated in light of five broad areas of market and public concern: protection of market participants and the public; efficiency, competitiveness, and financial integrity of futures markets; price discovery; sound risk management practices; and other public interest considerations. Accordingly, the Commission may, in its discretion, give greater weight to any one of the five enumerated areas of concern and may in its discretion determine that, notwithstanding its costs, a particular rule is necessary or appropriate to protect the public interest or to effectuate any of the provisions or to accomplish any of the purposes of the Act.

Part 39 is part of a package of related rule provisions implementing the CFMA. The Commission has considered the costs and benefits of part 39 and the costs and benefits of the related rule provisions. Significantly, part 39 limits the period of time for Commission review of DCO applications to 60 days, thereby providing the important benefit of an expedited review, even though the Act does not specify any time limit for review of DCO applications. Part 39 also provides the benefit of substantial, additional, non-binding guidance to DCO applicants and DCOs as to how they may comply with the statutory core principles. The rules impose reporting, recordkeeping and other informational requirements on DCOs only when they are mandated by, carry out, or are fully consistent with, the new provisions of the CFMA concerning DCOs.

The Commission has considered the costs and benefits of this rule package in light of the specific areas of concern identified in the CFMA. The rules impose limited costs on DCOs in requiring them to gather, compile, and submit certain information that the Commission needs in order to oversee their clearing functions and to enforce their compliance with the Act. The rules will not increase costs related to market competitiveness and will not affect the price discovery function of markets. The Commission believes that the anti-fraud provision of part 39 benefits market participants and the public interest by deterring illegal behavior and that the enforceability provision of part 39 benefits the public interest by furthering legal certainty.

After considering these factors, the Commission has determined to promulgate part 39. The Commission notes that it did not receive any comments in response to the discussion regarding the costs and benefits of part 39 included in the proposal. Moreover, insofar as the comments received raised any matters that might be deemed to relate to the costs and benefits of part 39, the Commission has addressed them in the foregoing discussion and through modifications to the original proposal.

V. Implementation Issues; No-action

In light of Congress's intent to implement the changes of the CFMA without delay, the Commission determined when it proposed these rules that it would not bring any enforcement action against any person who complied with the proposed rules during the transition period between the effective date of the amendments to the Act (generally December 21, 2000) and the adoption of final implementing regulations. 66 FR at 24310. At that time, the Commission also advised persons relying on that no-action position that they would be required to bring their conduct into compliance with the final rules to the extent that the final rules differed from the proposed rules. *Id.*

The rules being adopted today will become effective October 29, 2001. To the extent that the final rules differ from the proposed rules, persons relying on the no-action position of the proposed rules will be required to bring their conduct into compliance with the final rules in order to continue to rely on the no-action. Furthermore, the Commission will not bring any enforcement action against any person who complies with the final rules during the period between their adoption and effective date.

VI. Related Matters

A. Regulatory Flexibility Act

The Regulatory Flexibility Act (''RFA''), 5 U.S.C. 601–612, requires that agencies, in promulgating rules, consider the impact of those regulations on small entities. The rules adopted herein would affect DCOs. The Commission has previously established certain definitions of ''small entities'' to be used by the Commission in evaluating the impact of its rules on such entities in accordance with the RFA.[42] In its previous determinations, the Commission has concluded that contract markets are not small entities for purposes of the RFA.[43] DCOs clear contracts executed on contract markets and other trading facilities. For reasons similar to those applicable to contract markets, DCOs, as defined in the CFMA, should not be considered small entities. In this regard, the Commission notes that it did not receive any comments regarding the RFA implications of part 39. Accordingly, the Commission does not expect the rules, as adopted herein, to have a significant economic impact on a substantial number of small entities. Therefore, the Acting Chairman, on behalf of the Commission, hereby certifies, pursuant to 5 U.S.C. 605(b), that the promulgated rules will not have a significant economic impact on a substantial number of small entities.

B. Paperwork Reduction Act

Part 39 contains information collection requirements. As required by the Paperwork Reduction Act of 1995 (44 U.S.C. 3507(d)), the Commission submitted a copy of this part to the Office of Management and Budget (''OMB'') for its review. No comments were received in response to the Commission's invitation in the proposing release to comment on any potential paperwork burden associated with part 39.

List of Subjects in 17 CFR Part 39

Commodity futures, Consumer protection.

In consideration of the foregoing, and pursuant to the authority contained in section 7b of title 7 of the U.S.C., as added by the Commodity Futures Modernization Act of 2000, Appendix E of Pub. L. 106–554, 114 Stat. 2763 (2000), the Commission hereby amends Chapter I of Title 17 of the Code of Federal Regulations by adding part 39 to read as follows:

PART 39—DERIVATIVES CLEARING ORGANIZATIONS

Sec.
39.1 Scope.
39.2 Exemption.
39.3 Procedures for registration.
39.4 Procedures for implementing derivatives clearing organization rules and clearing certain new products.
39.5 Information relating to derivatives clearing organization operations.
39.6 Enforceability.
39.7 Fraud in connection with the clearing of transactions on a derivatives clearing organization.

Appendix A to Part 39—Application Guidance and Compliance With Core Principles

Authority: 7 U.S.C. 7b as added by the Commodity Futures Modernization Act of 2000, Appendix E of Pub. L. 106–554, 114 Stat. 2763 (2000).

§ 39.1 Scope.

The provisions of this part apply to any derivatives clearing organization as defined under section 1a(9) of the Act which is registered or deemed to be registered with the Commission as a

[42] 47 FR 18618 (April 30, 1982).

[43] 47 FR 18618, 18619 (discussing contract markets).

derivatives clearing organization, is required to register as such with the Commission pursuant to section 5b(a) of the Act, or which voluntarily applies to register as such with the Commission pursuant to section 5b(b) or otherwise.

§ 39.2 Exemption.

A derivatives clearing organization and the clearing of agreements, contracts and transactions on a derivatives clearing organization are exempt from all Commission regulations except for the requirements of this part 39 and §§ 1.3, 1.12(f)(1), 1.20, 1.24, 1.25, 1.26, 1.27, 1.29, 1.31, 1.36, 1.38(b), part 40 and part 190 of this chapter, and as applicable to the agreement, contract or transaction cleared, parts 15 through 18 of this chapter. The foregoing reserved regulations are applicable to a derivatives clearing organization and its activities as though they were set forth in this section and included specific reference to derivatives clearing organizations. Any reference to the term ''clearinghouse'' or ''clearing organization'' contained in the regulations shall be deemed to refer to a derivatives clearing organization.

§ 39.3 Procedures for registration.

(a) *Registration by application.* An organization shall be deemed to be registered as a derivatives clearing organization sixty days after receipt by the Commission of an application for registration as a derivatives clearing organization unless notified otherwise during that period, or, as determined by Commission order, registered upon conditions, if:

(1) The application is labeled as being submitted pursuant to this part 39;

(2) The applicant represents that it will operate in accordance with the definition of derivatives clearing organization contained in section 1a(9) of the Act;

(3) The application includes a copy of the applicant's rules;

(4) To the extent it is not self evident from the applicant's rules, the application demonstrates how the applicant is able to satisfy each of the core principles specified in section 5b(c)(2) of the Act;

(5) The applicant submits agreements entered into or to be entered into between or among the applicant, its operator or its participants, and descriptions of system test procedures, tests conducted or test results, that will enable the applicant to comply, or demonstrate the applicant's ability to comply, with the core principles specified in section 5b(c)(2) of the Act;

(6) The applicant does not amend or supplement the application except as requested by the Commission or for correction of typographical errors, renumbering or other nonsubstantive revisions, during that period;

(7) The applicant identifies with particularity information in the application that will be subject to a request for confidential treatment and supports that request for confidential treatment with reasonable justification; and

(8) The applicant has not instructed the Commission in writing during the review period to review the application pursuant to the time provisions of and procedures under section 6 of the Act.

(b) *Termination of part 39 review.* If, during the sixty-day period for review provided by paragraph (a) of this section, it appears that the application's form or substance fails to meet the requirements of this part, the Commission shall notify the applicant seeking registration that the Commission is terminating review under this section and will review the proposal under the time period and procedures of section 6 of the Act. This termination notification will state the nature of the issues raised and the specific condition of registration that the applicant would violate, appears to violate, or the violation of which cannot be ascertained from the application. Within ten days of receipt of this termination notification, the applicant seeking registration may request that the Commission render a decision whether to register the applicant or to institute a proceeding to deny the proposed application under procedures specified in section 6 of the Act by notifying the Commission that the applicant views its submission as complete and final as submitted.

(c) *Withdrawal of application for registration.* An applicant for registration may withdraw its application by filing with the Commission such a request. Withdrawal of an application for registration shall not affect any action taken or to be taken by the Commission based upon actions, activities, or events occurring during the time that the application for registration was pending with the Commission.

(d) *Guidance for applicants and registrants.* Appendix A to this part provides guidance to applicants and registrants on how the core principles specified in section 5b(c)(2) of the Act may be satisfied.

(e) *Delegation of authority.* (1) The Commission hereby delegates, until it orders otherwise, to the Director of the Division of Trading and Markets or the Director's delegatees, with the concurrence of the General Counsel or the General Counsel's delegatees, the authority to exercise the functions under paragraphs (a) and (b) of this section and under § 39.5.

(2) The Director of the Division of Trading and Markets may submit to the Commission for its consideration any matter which has been delegated in this paragraph.

(3) Nothing in this paragraph prohibits the Commission, at its election, from exercising the authority delegated in paragraph (e)(1) of this section.

§ 39.4 Procedures for implementing derivatives clearing organization rules and clearing certain new products.

(a) *Request for approval of rules.* An applicant for registration, or a registered derivatives clearing organization, may request, pursuant to the procedures of § 40.5 of this chapter, that the Commission approve any or all of its rules and subsequent amendments thereto, including operational rules, prior to their implementation or, notwithstanding the provisions of section 5c(c)(2) of the Act, at any time thereafter, under the procedures of § 40.5 of this chapter. A derivatives clearing organization may label as, ''Approved by the Commission,'' only those rules that have been so approved.

(b) *Self-certification of rules.* Proposed new or amended rules of a derivatives clearing organization not voluntarily submitted for prior Commission approval pursuant to paragraph (a) of this section must be submitted to the Commission with a certification that the proposed new rule or rule amendment complies with the Act and rules thereunder pursuant to the procedures of § 40.6 of this chapter.

(c) *Acceptance of certain new products for clearing.* A derivatives clearing organization that accepts for clearing a new product that is not traded on a designated contract market or a registered derivatives transaction execution facility must submit to the Commission any rules establishing the terms and conditions of the product that make it acceptable for clearing with a certification that the clearing of the product and the rules and terms and conditions comply with the Act and the rules thereunder pursuant to the procedures of § 40.2 of this chapter.

(d) *Orders regarding competition.* An applicant or a registered derivatives clearing organization may request that the Commission issue an order concerning whether a rule or practice of the organization is the least anticompetitive means of achieving the objectives, purposes, and policies of the Act.

§ 39.5 Information relating to derivatives clearing organization operations.

(a) Upon request by the Commission, a derivatives clearing organization shall file with the Commission such information related to its business as a clearing organization, including information relating to trade and clearing details, in the form and manner and within the time as specified by the Commission in the request.

(b) Upon request by the Commission, a derivatives clearing organization shall file with the Commission a written demonstration, containing such supporting data, information and documents, in the form and manner and within such time as the Commission may specify that the derivatives clearing organization is in compliance with one or more core principles as specified in the request.

(c) Information regarding transactions by large traders cleared by a derivatives clearing organization shall be filed with the Commission, in a form and manner acceptable to the Commission, by futures commission merchants, clearing members, foreign brokers or registered entities other than a derivatives clearing organization, as applicable. Provided, however, that if no such person or entity is required to file large trader information with the Commission, such information must be filed with the Commission by a derivatives clearing organization.

(d) Upon special call by the Commission, each futures commission merchant, clearing member or foreign broker shall provide information to the Commission concerning customer accounts or related positions cleared on a derivatives clearing organization or other multilateral clearing organization in the form and manner and within the time specified by the Commission in the special call.

§ 39.6 Enforceability.

An agreement, contract or transaction submitted to a derivatives clearing organization for clearance shall not be void, voidable, subject to rescission, or otherwise invalidated or rendered unenforceable as a result of:

(a) A violation by the derivatives clearing organization of the provisions of the Act or of Commission regulations; or

(b) Any Commission proceeding to alter or supplement a rule under section 8a(7) of the Act, to declare an emergency under section 8a(9) of the Act, or any other proceeding the effect of which is to alter, supplement, or require a derivatives clearing organization to adopt a specific rule or procedure, or to take or refrain from taking a specific action.

§ 39.7 Fraud in connection with the clearing of transactions on a derivatives clearing organization.

It shall be unlawful for any person, directly or indirectly, in or in connection with the clearing of transactions by a derivatives clearing organization:

(a) To cheat or defraud or attempt to cheat or defraud any person;

(b) Willfully to make or cause to be made to any person any false report or statement or cause to be entered for any person any false record; or

(c) Willfully to deceive or attempt to deceive any person by any means whatsoever.

Appendix A to Part 39—Application Guidance and Compliance With Core Principles

This appendix provides guidance concerning the core principles with which applicants must demonstrate the ability to comply and with which registered derivatives clearing organizations must continue to comply to be granted and to maintain registration as a derivatives clearing organization under section 5b of the Act and § 39.3 and § 39.5 of the Commission's regulations. The guidance follows each core principle and can be used to demonstrate core principle compliance under § 39.3(a)(iv) and § 39.5(d). The guidance for each core principle is illustrative only of the types of matters a clearing organization may address, as applicable, and is not intended to be a mandatory checklist. Addressing the criteria set forth in this appendix would help the Commission in its consideration of whether the clearing organization is in compliance with the core principles. To the extent that compliance with, or satisfaction of, a core principle is not self-explanatory from the face of a clearing organization's rules, an application pursuant to § 39.3 or a submission pursuant to § 39.5 should include an explanation or other form of documentation demonstrating that the clearing organization is able to or does comply with the core principles.

Core Principle A: IN GENERAL—To be registered and to maintain registration as a derivatives clearing organization, an applicant shall demonstrate to the Commission that the applicant complies with the core principles specified in this paragraph. The applicant shall have reasonable discretion in establishing the manner in which it complies with the core principles.

An entity preparing to submit to the Commission an application to operate as a derivatives clearing organization is encouraged to contact Commission staff for guidance and assistance in preparing its application. Applicants may submit a draft application for review prior to the submission of an actual application without triggering the application review procedures of § 39.3 of the Commission's regulations. The Commission also may require a derivatives clearing organization to demonstrate to the Commission that it is operating in compliance with one or more core principles.

Core Principle B: FINANCIAL RESOURCES—The applicant shall demonstrate that the applicant has adequate financial, operational, and managerial resources to discharge the responsibilities of a derivatives clearing organization.

In addressing Core Principle B, applicants and registered derivatives clearing organizations may describe or otherwise document:

1. The resources dedicated to supporting the clearing function:

a. The level of resources available to the clearing organization and the sufficiency of those resources to assure that no material adverse break in clearing operations will occur in a variety of market conditions; and

b. The level of member/participant default such resources could support as demonstrated through use of hypothetical default scenarios that explain assumptions and variables factored into the illustrations.

2. The nature of resources dedicated to supporting the clearing function:

a. The type of the resources, including their liquidity, and how they could be accessed and applied by the clearing organization promptly;

b. How financial and other material information will be updated and reported to members, the public, if and when appropriate, and to the Commission on an ongoing basis; and

c. Any legal or operational impediments or conditions to access.

Core Principle C: PARTICIPANT AND PRODUCT ELIGIBILITY—The applicant shall establish (i) appropriate admission and continuing eligibility standards (including appropriate minimum financial requirements) for members of and participants in the organization; and (ii) appropriate standards for determining eligibility of agreements, contracts, or transactions submitted to the applicant.

In addressing Core Principle C, applicants and registered derivatives clearing organizations may describe or otherwise document:

1. Member/participant admission criteria:

a. How admission standards for its clearing members/participants would contribute to the soundness and integrity of operations; and

b. Matters such as whether these criteria would be in the form of organization rules that apply to all clearing members/participants, whether different levels of membership/participation would relate to different levels of net worth, income, and creditworthiness of members/participants, and whether margin levels, position limits and other controls would vary in accordance with these levels.

2. Member/participant continuing eligibility criteria:

a. A program for monitoring the financial status of its members/participants; and

b. Whether and how the clearing organization would be able to change continuing eligibility criteria in accordance

with changes in a member's/participant's financial status.

3. Criteria for instruments acceptable for clearing:

a. The criteria, and the factors considered in establishing the criteria, for the types of agreements, contracts, or transactions it will clear; and

b. How those criteria take into account the different risks inherent in clearing different agreements, contracts, or transactions and how they affect maintenance of assets to support the guarantee function in varying risk environments.

4. The clearing function for each instrument the organization undertakes to clear.

Core Principle D: RISK MANAGEMENT—The applicant shall have the ability to manage the risks associated with discharging the responsibilities of a derivatives clearing organization through the use of appropriate tools and procedures.

In addressing Core Principle D, applicants and registered derivatives clearing organizations may describe or otherwise document:

1. Use of risk analysis tools and procedures:

a. How the adequacy of the overall level of financial resources would be tested on an ongoing periodic basis in a variety of market conditions;

b. How the organization would use specific risk management tools such as stress testing and value at risk calculations; and

c. What contingency plans the applicant has for managing extreme market events.

2. Use of collateral:

a. What forms and levels of collateral would be established and collected;

b. How amounts would be adequate to secure prudentially obligations arising from clearing transactions and, where applicable, performing as a central counterparty;

c. The factors considered in determining appropriate margin levels for an instrument cleared and for clearing members/participants;

d. The appropriateness of required or allowed forms of margin given the liquidity and related requirements of the clearing organization;

e. How the clearing organization would value open positions and collateral assets; and

f. The proposed margin collection schedule and how it would relate to changes in the value of market positions and collateral values.

3. Use of credit limits:

If systems would be implemented that would prevent members/participants and other market participants from exceeding credit limits and how they would operate.

Core Principle E: SETTLEMENT PROCEDURES—The applicant shall have the ability to (i) complete settlements on a timely basis under varying circumstances; (ii) maintain an adequate record of the flow of funds associated with each transaction that the applicant clears; and (iii) comply with the terms and conditions of any permitted netting or offset arrangements with other clearing organizations.

In addressing Core Principle E, applicants and registered derivatives clearing organizations may describe or otherwise document:

1. Settlement timeframe:

a. Procedures for completing settlements on a timely basis during times of normal operating conditions; and

b. Procedures for completing settlements on a timely basis in varying market circumstances including during a period when one or more significant members/participants have defaulted.

2. Recordkeeping:

a. The nature and quality of the information collected concerning the flow of funds involved in clearing and settlement; and

b. How such information would be recorded, maintained and accessed.

3. Interfaces with other clearing organizations:

How compliance with the terms and conditions of netting or offset arrangements with other clearing organizations would be met, including, among others, common banking or common clearing programs.

Core Principle F: TREATMENT OF FUNDS—The applicant shall have standards and procedures designed to protect and ensure the safety of member and participant funds.

In addressing Core Principle F, applicants and registered derivatives clearing organizations may describe or otherwise document:

1. Safe custody:

a. The safekeeping of funds, whether in accounts, in depositories, or with custodians, and how it would meet industry standards of safety;

b. Any written terms regarding the legal status of the funds and the specific conditions or prerequisites for movement of the funds; and

c. The extent to which the deposit of funds in accounts in depositories or with custodians would limit concentration of risk.

2. Segregation between customer and proprietary funds:

Requirements or restrictions regarding commingling customer funds with proprietary funds, obligating customer funds for any purpose other than to purchase, clear, and settle the products the clearing organization is clearing, or procedures regarding customer funds which are subject to cross-margin or similar agreements, and any other aspects of customer fund segregation.

3. Investment standards:

a. How customer funds would be invested consistent with high standards of safety; and

b. How the organization will gather and keep associated records and data regarding the details of such investments.

Core Principle G: DEFAULT RULES AND PROCEDURES—The applicant shall have rules and procedures designed to allow for efficient, fair, and safe management of events when members or participants become insolvent or otherwise default on their obligations to the derivatives clearing organization.

In addressing Core Principle G, applicants and registered derivatives clearing organizations may describe or otherwise document:

1. Definition of default:

a. The events that will constitute member or participant default;

b. What action the organization would take upon a default and how the organization would otherwise enforce the definition of default; and

c. How the organization would address situations related to but which may not constitute an event of default, such as failure to comply with certain rules, failure to maintain eligibility standards, actions taken by other regulatory bodies, or other events.

2. Remedial action:

The authority pursuant to which, and how, the clearing organization may take appropriate action in the event of the default of a member/participant which may include, among other things, closing out positions, replacing positions, set-off, and applying margin.

3. Process to address shortfalls:

Procedures for the prompt application of clearing organization and/or member/participant financial resources to address monetary shortfalls resulting from a default.

4. Use of cross-margin programs:

How cross-margining programs would provide for clear, fair, and efficient means of covering losses in the event of a program participant default.

5. Customer priority rule:

Rules and procedures regarding priority of customer accounts over proprietary accounts of defaulting members/participants and, where applicable, in the context of specialized margin reduction programs such as cross-margining or trading links with other exchanges.

Core Principle H: RULE ENFORCEMENT—The applicant shall (i) maintain adequate arrangements and resources for the effective monitoring and enforcement of compliance with rules of the applicant and for resolution of disputes; and (ii) have the authority and ability to discipline, limit, suspend, or terminate a member's or participant's activities for violations of rules of the applicant.

In addressing Core Principle H, applicants and registered derivatives clearing organizations may describe or otherwise document:

1. Surveillance:

Arrangements and resources for the effective monitoring of compliance with rules relating to clearing practices and financial surveillance.

2. Enforcement:

Arrangements and resources for the effective enforcement of rules and authority and ability to discipline and limit or suspend a member's/participant's activities pursuant to clear and fair standards.

3. Dispute resolution:

Where applicable, arrangements and resources for resolution of disputes between customers and members/participants, and between members/participants.

Core Principle I: SYSTEM SAFEGUARDS—The applicant shall demonstrate that the applicant (i) has established and will maintain a program of oversight and risk analysis to ensure that the automated systems of the applicant function properly and have adequate capacity and security;

and (ii) has established and will maintain emergency procedures and a plan for disaster recovery, and will periodically test backup facilities sufficient to ensure daily processing, clearing, and settlement of transactions.

In addressing Core Principle I, applicants and registered derivatives clearing organizations may describe or otherwise document:

1. Oversight/risk analysis program:

a. Whether a program addresses appropriate principles and procedures for the oversight of automated systems to ensure that its clearing systems function properly and have adequate capacity and security. The Commission believes that the guidelines issued by the International Organization of Securities Commissions (IOSCO) in 1990 and adopted by the Commission on November 21, 1990 (55 FR 48670), as supplemented in October 2000, are appropriate guidelines for an automated clearing system to apply.

b. Emergency procedures and a plan for disaster recovery; and

c. Periodic testing of back-up facilities and ability to provide timely processing, clearing, and settlement of transactions.

2. Appropriate periodic objective system reviews/testing:

a. Any program for the periodic objective testing and review of the system, including tests conducted and results; and

b. Confirmation that such testing and review would be performed or assessed by a qualified independent professional.

Core Principle J: REPORTING—The applicant shall provide to the Commission all information necessary for the Commission to conduct the oversight function of the applicant with respect to the activities of the derivatives clearing organization.

In addressing Core Principle J, applicants and registered derivatives clearing organizations may describe or otherwise document:

1. Information available to or generated by the clearing organization that will be made routinely available to the Commission, upon request and/or as appropriate, to enable the Commission to perform properly its oversight function, including information regarding counterparties and their positions, stress test results, internal governance, legal proceedings, and other clearing activities;

2. Information the clearing organization will make available to the Commission on a non-routine basis and the circumstances which would trigger such action;

3. The information the organization intends to make routinely available to members/participants and/or the general public; and

4. Provision of information:

a. The manner in which all relevant routine or non-routine information will be provided to the Commission, whether by electronic or other means; and

b. The manner in which any information will be made available to members/participants and/or the general public.

Core Principle K: RECORDKEEPING—The applicant shall maintain records of all activities related to the business of the applicant as a derivatives clearing organization in a form and manner acceptable to the Commission for a period of 5 years.

In addressing Core Principle K, applicants and registered derivatives clearing organizations may describe or otherwise document:

1. The different activities related to the entity as a clearing organization for which it must maintain records; and

2. How the entity would satisfy the performance standards of Commission regulation 1.31 (17 CFR 1.31), reserved in this part 39 and applicable to derivatives clearing organizations, including:

a. What ''full'' or ''complete'' would encompass with respect to each type of book or record that would be maintained;

b. The form and manner in which books or records would be compiled and maintained with respect to each type of activity for which such books or records would be kept;

c. Confirmation that books and records would be open to inspection by any representative of the Commission or of the U.S. Department of Justice;

d. How long books and records would be readily available and how they would be made readily available during the first two years; and

e. How long books and records would be maintained (and confirmation that, in any event, they would be maintained for at least five years).

Core Principle L: PUBLIC INFORMATION—The applicant shall make information concerning the rules and operating procedures governing the clearing and settlement systems (including default procedures) available to market participants.

In addressing Core Principle L, applicants and registered derivatives clearing organizations may describe or otherwise document:

Disclosure of information regarding rules and operating procedures governing clearing and settlement systems:

a. Which rules and operating procedures governing clearing and settlement systems should be disclosed to the public, to whom they would be disclosed, and how they would be disclosed;

b. What other information would be available regarding the operation, purpose and effect of the clearing organization's rules;

c. How members/participants may become familiar with such procedures before participating in operations; and

d. How members/participants will be informed of their specific rights and obligations preceding a default and upon a default, and of the specific rights, options and obligations of the clearing organization preceding and upon the member's/participant's default.

Core Principle M: INFORMATION SHARING—The applicant shall (i) enter into and abide by the terms of all appropriate and applicable domestic and international information-sharing agreements; and (ii) use relevant information obtained from the agreements in carrying out the clearing organization's risk management program.

In addressing Core Principle M, applicants and registered derivatives clearing organizations may describe or otherwise document:

1. Applicable appropriate domestic and international information-sharing agreements and arrangements including the different types of domestic and international information-sharing arrangements, both formal and informal, which the clearing organization views as appropriate and applicable to its operations.

2. How information obtained from information-sharing arrangements would be used to carry out risk management and surveillance programs:

a. How information obtained from any information-sharing arrangements would be used to further the objectives of the clearing organization's risk management program and any of its surveillance programs including financial surveillance and continuing eligibility of its members/participants;

b. How accurate information is expected to be obtained and the mechanisms or procedures which would make timely use and application of all information; and

c. The types of information expected to be shared and how that information would be shared.

Core Principle N: ANTITRUST CONSIDERATIONS—Unless appropriate to achieve the purposes of this Act, the derivatives clearing organization shall avoid (i) adopting any rule or taking any action that results in any unreasonable restraint of trade; or (ii) imposing any material anticompetitive burden on trading on the contract market.

Pursuant to section 5b(c)(3) of the Act, a registered derivatives clearing organization or an entity seeking registration as a derivatives clearing organization may request that the Commission issue an order concerning whether a rule or practice of the organization is the least anticompetitive means of achieving the objectives, purposes, and policies of the Act. The Commission intends to apply section 15(b) of the Act to its consideration of issues under this core principle in a manner consistent with that previously applied to contract markets.

Issued in Washington, DC on August 22, 2001, by the Commission.

Jean A. Webb,

Secretary of the Commission.

[FR Doc. 01–21670 Filed 8–28–01; 8:45 am]

BILLING CODE 6351–01–P

DEPARTMENT OF THE TREASURY

Bureau of Alcohol, Tobacco and Firearms

27 CFR Parts 44, 46 and 275

[T.D. ATF–465 ; Ref: Notice No. 913]

RIN 1512–AC35

Implementation of Public Laws 106–476 and 106–554, Relating to Tobacco Importation Restrictions, Markings, Repackaging, and Destruction of Forfeited Tobacco Products (2000R–492P)

AGENCY: Bureau of Alcohol, Tobacco and Firearms (ATF), Department of the Treasury.

ACTION: Final rule (Treasury decision).

SUMMARY: This final rule amends the regulations governing tobacco products in order to implement several provisions of the Imported Cigarette Compliance Act of 2000 included as part of the Tariff Suspension and Trade Act of 2000. Sections 4002 and 4003 of this new law require that tobacco products and cigarette papers and tubes manufactured in the United States and labeled or shipped for exportation (under the Internal Revenue Code of 1986 (IRC)) can only be re-imported by the original manufacturer or by an export warehouse proprietor authorized to do so by the original manufacturer (except for a personal use exemption discussed below), provide that those articles labeled for exportation may not be sold or held for sale for domestic consumption in the United States unless they are removed from their export packaging and repackaged by the original manufacturer into new packaging that does not contain an export label, and require the destruction of tobacco products forfeited under section 5761(c) of the IRC.

This final rule also amends the regulations governing tobacco products in order to implement section 315 of the Consolidated Appropriations Act, 2001. Travelers entering the United States, if they claim and are granted a personal use exemption, are allowed to bring U.S. manufactured tobacco products labeled for export back into the United States up to the quantity allowed entry free of tax and duty under Chapter 98 of the Harmonized Tariff Schedule of the United States. In addition, a traveler claiming such a personal use exemption upon arrival at the border may voluntarily relinquish to the U.S. Customs Service any excess of such quantity without incurring the penalty under section 5761(c) of the IRC.

This final rule implements these changes in the law by providing new and amended regulations in parts 44 (formerly part 290), 46 (formerly part 296) and 275 of title 27 of the Code of Federal Regulations (CFR). Note that the effective date of the above provisions of the Imported Cigarette Compliance Act of 2000 is February 7, 2001. Section 315 of the Consolidated Appropriations Act, 2001 is retroactive to the effective date of the Balanced Budget Act of 1997, January 1, 2000.

DATES: This final rule is effective on October 29, 2001.

FOR FURTHER INFORMATION CONTACT: Mr. Daniel Hiland, Regulations Division, Bureau of Alcohol, Tobacco and Firearms, 650 Massachusetts Avenue, NW., Washington, DC 20226; Telephone (202) 927–8210.

SUPPLEMENTARY INFORMATION:

Background

On December 22, 1999, the Bureau of Alcohol, Tobacco and Firearms published a temporary rule, T.D. ATF–421, in the **Federal Register** (64 FR 71918, Dec. 22, 1999). This temporary rule implemented several provisions found in section 9302 of the Balanced Budget Act of 1997 (Act), Pub. L. 105–33, 111 Stat. 672. Section 9302 of the Act had amended the Internal Revenue Code of 1986 at sections 5704(b), 5712, 5754 and 5761(c). These amendments: placed restrictions on the importation of previously exported tobacco products, required markings on tobacco products or cigarette papers and tubes removed or transferred without payment of the federal excise tax, provided penalties for selling, relanding, or receiving, within the jurisdiction of the United States, tobacco products or cigarette papers and tubes which have been labeled and shipped for exportation and were removed after the effective date, and authorized the Secretary to prescribe minimum capacity or activity requirements as a criteria for issuance of a manufacturer's permit. These new provisions of law became effective January 1, 2000.

The temporary rule, T.D. ATF–421, implemented these changes in law by providing new and amended regulations in parts 200, 270, 275 and 290 of title 27 of the Code of Federal Regulations (CFR). Concurrently with the temporary rule, ATF also published a notice of proposed rulemaking, Notice No. 887 (64 FR 71927, Dec. 22, 1999), that solicited comments regarding the temporary regulations.

On April 18, 2000 the United States District Court for the District of Columbia in the civil action, *World Duty Free Americas, Inc.* v. *Treasury,* (D.D.C. No. 00–00404 (RCL)), issued a temporary injunction enjoining the Treasury Department from enforcing the temporary regulations at 27 CFR 275.11 and 27 CFR 275.83, in T.D. ATF–421, to the extent that they prohibited the importation of cigarettes purchased in U.S. duty free stores up to the limit allowed by the personal use exemption provided by 19 U.S.C. 1555 and the Harmonized Tariff Schedule of the United States, 19 U.S.C. 1202, subheadings 9804.00.65, 9804.00.70 and 9804.00.72.

Later, on November 9, 2000, the President signed the Tariff Suspension and Trade Act of 2000, Public Law 106–476, 114 Stat. 2101, that included the Imported Cigarette Compliance Act of 2000 (ICCA 2000). Several sections of the IRC that were amended by Balanced Budget Act of 1997 were further amended by the ICCA 2000, including sections 5704(d), 5754 and 5761(c). These new amendments require that tobacco products and cigarette papers and tubes manufactured in the United States and labeled or shipped for exportation under the IRC can only be re-imported by the original manufacturer, or by an export warehouse proprietor authorized to do so by the original manufacturer. Also, articles labeled for exportation may not be sold or held for sale for domestic consumption in the United States unless they are removed from their export packaging and repackaged by the original manufacturer into new packaging that does not contain an export label. Finally, the ICCA 2000 requires the destruction of tobacco products forfeited under section 5761(c).

In addition, the Consolidated Appropriations Act, 2001, signed December 21, 2000, Public Law 106–554, 114 Stat. 2763, amended the IRC at section 5761(c) by adding language to the law that provides that travelers entering the United States, if they claim and are granted a personal use exemption, are allowed to bring U.S. manufactured tobacco products labeled for export back into the United States up to the quantity allowed entry free of tax and duty under Chapter 98 of the Harmonized Tariff Schedule of the United States. In addition, a traveler claiming such a personal use exemption upon arrival at the border may voluntarily relinquish to the U.S. Customs Service any excess of such quantity without incurring the penalty under section 5761(c). However, no quantity of tobacco products, other than the quantity allowed entry free of tax and duty under chapter 98 of the Harmonized Tariff Schedule of the United States, may be relanded or received as a personal use quantity.

ATF believes that the above-described changes in the law are clear and leave no discretion in implementation. However, because of the litigation then pending in *World Duty Free Americas, Inc.* v. *Treasury,* ATF decided to issue a notice of proposed rulemaking prior to the issuance of a final rule.

Notice of Proposed Rulemaking

On March 26, 2001, ATF published a notice of proposed rulemaking in the **Federal Register** (Notice No. 913, 66 FR 16425, March 26, 2001) to solicit public comments on proposed regulations. In that notice, ATF proposed to amend the regulations in 27 CFR parts 275, 290

(currently part 44) and 296 (currently part 46) in order to implement several of the new provisions of law found in the ICCA 2000 and the Consolidated Appropriations Act, 2001. The public was invited to submit comments on this notice for a period of 60 (sixty) days ending May 25, 2001.

Recodification of Parts 290 and 296

Following the publication of Notice No. 913 there were two separate rulemaking actions which affected the numbering system for the regulations that were proposed in Notice No. 913. The regulations at 27 CFR part 290 have been recodified as 27 CFR part 44. Similarly the regulations at 27 CFR part 296 have been recodified as 27 CFR part 46. Thus, all references to parts 290 and 296 in Notice 913 will now appear in this final rule as parts 44 and 46 respectively.

Comments on the NPRM

In response to Notice No. 913, ATF received one letter of comment from Mr. Craig A. Johnson of Philip Morris Incorporated. In his letter, Mr. Johnson stated that Philip Morris Incorporated urged prompt adoption (without change) of the proposed rule, which would implement the provisions of the ICCA 2000. He further stated that he understood that U.S. Customs will be promulgating regulations to implement the other provisions of this new law which amends the Tariff Act of 1930 and he urged ATF and U.S. Customs to coordinate with each other to enforce the law.

The proposed regulations have been largely adopted as proposed in Notice No. 913. The following is a summary of those sections of the IRC that were amended by the Balanced Budget Act of 1997 and further amended by the ICCA 2000 and the Consolidated Appropriations Act, 2001. Also discussed are the sections of the regulations that have been amended by this final rule.

Final Rule

Importation Restrictions

Balanced Budget Act

Section 9302 of the Balanced Budget Act of 1997 added a new section, 26 U.S.C. 5754, to the IRC entitled, ''Restriction on importation of previously exported tobacco products.'' This new section became effective on January 1, 2000 and it placed severe limitations on the conditions under which previously exported tobacco products, and cigarette papers and tubes may be imported or brought back into the United States. Section 5754 stated that such products may only be imported or brought into the United States as provided in section 5704(d). The referenced section, 5704(d), allowed previously exported tobacco products and cigarette papers and tubes to be released from Customs custody, without payment of tax, for transfer to a manufacturer of tobacco products or cigarette papers and tubes, or to the proprietor of an export warehouse. Thus, under section 5754, the only condition under which previously exported tobacco products and cigarette papers and tubes could be imported or brought into the United States was by release from Customs custody to a manufacturer or an export warehouse proprietor as an in-bond transfer. However, section 5704(d) allowed previously exported tobacco products to be transferred to any manufacturer of tobacco products or cigarette papers and tubes, or to any export warehouse proprietor. The law did not mandate that the previously exported products return to the original manufacturer or export warehouse proprietor as authorized by the original manufacturer.

Imported Cigarette Compliance Act of 2000

Section 4002 of the ICCA 2000 further amended sections 5754 and 5704(d) of the IRC whereby tobacco products and cigarette papers and tubes manufactured in the United States and previously exported may be imported or brought into the United States, if such articles are released from Customs custody with the partial duty exemption provided in section 5704(d), or are returned to the original manufacturer of such articles as provided in section 5704(c). Further, section 5704(d) of the IRC was amended by deleting a reference to ''a manufacturer of'' and inserting ''the original manufacturer of'' tobacco products or cigarette papers and tubes. The term ''proprietor of an export warehouse'' was also amended by inserting the phrase ''authorized by such manufacturer to receive such articles'' after the term ''proprietor of an export warehouse.'' Therefore, the amended language of the law in 5704(d) now refers to ''proprietor of an export warehouse authorized by such manufacturer to receive such articles.''

Thus, with these amendments to sections 5754 and 5704(d), previously exported tobacco products and cigarette papers and tubes of United States manufacture may be imported or brought into the United States by: (1) release from Customs custody under 5704(d) to ''the original manufacturer'' or to ''the proprietor of an export warehouse authorized by such manufacturer to receive such articles'' or, (2) return to the original manufacturer of such articles as provided in 5704(c).

Amendments to the Regulations

This final rule amends the regulations at 27 CFR 275.82 to reflect the above described changes in the law at 26 U.S.C. 5754. Further, amended section 275.82(c) of the regulations is the section that provides for the type of importations described under 26 U.S.C. 5704(d) and amended section 275.82(d) of the regulations provides for the type of importations described under 26 U.S.C. 5704(c).

Tobacco Products Labeled for Export

Balanced Budget Act

As discussed above, section 9302 of the Balanced Budget Act of 1997 amended the IRC by adding section 5754 which imposed restrictions on the importation of previously exported tobacco products. Thus, only articles which had been exported from the United States were subject to the re-importation restriction. It also amended section 5704(b) by providing that tobacco products, and cigarette papers and tubes may not be transferred or removed under 26 U.S.C. 5704(b) unless they bear the proper marks, labels and notices.

Imported Cigarette Compliance Act of 2000

Section 4002 of the ICCA 2000 further amended the IRC by providing new language at section 5754 whereby tobacco products and cigarette papers and tubes manufactured in the United States and ''labeled for exportation'' are subject to the restrictions and penalties applicable to this section. Thus, the new language at section 5754 makes the law applicable to both exported articles and articles labeled for export, but not exported. The Committee report that accompanied the bill stated: ''The provision expands the application of the special tax penalty for re-importing tobacco products to include the sale in the U.S. domestic market of tobacco products labeled for export (but not actually exported). Thus, this penalty can be imposed in addition to the present-law penalties and other sanctions that apply to tobacco products that might be removed for export, but instead are diverted into the U.S. domestic market.'' S. Rep. No. 503, 106th Cong., 2nd Sess. 89 (2000).

Amendments to the Regulations

This final rule amends the regulations at 27 CFR 275.82 to reflect the above described change in the law.

Specifically, 27 CFR 275.82(a) now states that the provisions of this section apply to ''tobacco products and cigarette papers and tubes manufactured in the United States and labeled for exportation.'' The penalty provisions in 27 CFR 275.83(a), which implement verbatim section 5761(c), already applied to articles ''labeled or shipped for exportation.'' Therefore, since articles labeled for exportation are already addressed in section 275.83, it was not necessary to amend this section to add the term ''labeled or shipped for exportation.''

Returned Articles in the U.S. Market

Balanced Budget Act

Section 9302 of the Balanced Budget Act of 1997 imposed a new civil penalty on persons, other than manufacturers or export warehouse proprietors, who sell, reland or receive tobacco products or cigarette papers or tubes that have been labeled or shipped for exportation under Chapter 52 of the IRC. However, section 9302(i) of this Act also provided that the amendments to the IRC under the Balanced Budget Act of 1997 only applied to ''articles removed'' after December 31, 1999. As a consequence, articles that were removed on or before December 31, 1999 were not subject to the new penalty. Thus, relanded tobacco products in packages bearing export marks that were lawfully removed from Customs custody and entered into the United States prior to January 1, 2000 were lawful products and not subject to the civil penalty, or other criminal provisions of Chapter 52 of the IRC.

Imported Cigarette Compliance Act of 2000

Section 4002 of the ICCA 2000 further amended the IRC by providing new language at section 5754(a)(1)(C) whereby tobacco products and cigarette papers and tubes manufactured in the United States and labeled for exportation may not be sold or held for sale for domestic consumption in the United States unless such articles are removed from their export packaging and repackaged by the original manufacturer into new packaging that does not contain an export label. Further, the provisions of section 4002 take effect 90 days after enactment of the Act and, therefore, are effective on February 7, 2001. See section 4002(d) of the ICCA 2000 for the effective date.

The consequence of this amendment is that whereas the Balanced Budget Act of 1997 had allowed previously exported articles that were imported before January 1, 2000 to be legally sold on the domestic market, the ICCA 2000 makes the sale or holding for sale of such articles illegal effective February 7, 2001, unless they are removed from their export packaging and repackaged by the original manufacturer into new packaging that does not contain an export label.

The Committee report that accompanied the bill, stated: ''The provision also authorizes the Treasury Department to seize all export-labeled tobacco products found in the U.S. domestic market regardless of the date of removal.'' S. Rep. No. 503, 106th Cong., 2nd Sess. 89 (2000).

Further, amended section 5754(a)(2) also provides that the restrictions on export-labeled articles also apply to articles that have been altered by a person other than the original manufacturer. Thus, if a person places stickers over the export label, or otherwise attempts to conceal or remove the export label on the packaging, the restrictions in 26 U.S.C. § 5754 still apply to that article.

Amendments to the Regulations

This final rule amends the regulations at 27 CFR 275.82(e) and (f), and 46.166(b) and (c) (formerly 296.166(b) and (c)) to reflect these changes in the law.

Disposition of Forfeited Tobacco Products

Balanced Budget Act

Section 9302 of the Balanced Budget Act of 1997 amended the IRC by adding a new civil penalty at 26 U.S.C. § 5761(c). The penalty applies to persons, other than manufacturers or export warehouse proprietors, who sell, reland or receive tobacco products or cigarette papers or tubes that have been labeled or shipped for exportation under Chapter 52 of the IRC. In addition to the civil penalty, criminal penalties and forfeiture of the product and any vessel, vehicle or aircraft involved in relanding or removing such product could be imposed. However, section 5761(c) did not specify how the Department of the Treasury should dispose of forfeited tobacco products.

Imported Cigarette Compliance Act of 2000

Section 4002(c) of the ICCA 2000 amended section 5761(c) of the IRC by adding language which requires that all relanded tobacco products and cigarette papers and tubes shall be forfeited to the United States and destroyed. The Committee report that accompanied the bill stated, ''The provision also provides that tobacco products that are forfeited to the Federal Government under present-law provisions must be destroyed (rather than being disposed of in any manner administratively determined by the Treasury Department).'' S. Rep. No. 503, 106th Cong., 2nd Sess. 89 (2000).

Amendments to the Regulations

This final rule amends the regulations at section 275.83(c) by providing that forfeited tobacco products and cigarette papers and tubes will be destroyed.

Travelers Entering the United States

Balanced Budget Act

As discussed earlier, the Balanced Budget Act of 1997 amended the IRC by adding two new sections of law aimed at restricting the importation of previously exported tobacco products. 26 U.S.C. 5754 provided that only manufacturers of tobacco products and export warehouses can import previously exported tobacco products. In addition, section 5761(c) provided penalties for selling, receiving, and relanding of tobacco products labeled or shipped for export. Neither section of law provided an exemption for travelers entering the United States with small quantities of tobacco products for personal use.

This application of the law was challenged by several operators of duty free stores in a civil action, *World Duty Free Americas, Inc.* v. *Treasury.* The court in *World Duty Free* issued a temporary injunction enjoining the Treasury Department from enforcing the temporary regulations at 27 CFR 275.11 and 275.83 to the extent that they prohibited the importation of cigarettes purchased in U.S. duty free stores up to the limit allowed by the personal use exemption provided by 19 U.S.C. 1555 and the Harmonized Tariff Schedule of the United States, 19 U.S.C. 1202, subheadings 9804.00.65, 9804.00.70 and 9804.00.72.

ICCA 2000 and Consolidated Appropriations Act, 2001

As discussed earlier, on November 9, 2000 the President signed the ICCA 2000. Section 4003 of the ICCA 2000 amended the IRC at section 5761(c) by inserting the following language: ''This subsection and section 5754 shall not apply to any person who relands or receives tobacco products in the quantity allowed entry free of tax and duty under subchapter IV of chapter 98 of the Harmonized Tariff Schedule of the United States. No quantity of tobacco products other than the quantity referred to in the preceding sentence may be relanded or received as a personal use quantity.''

Shortly thereafter, on December 21, 2000, the President also signed the Consolidated Appropriations Act, 2001. Section 315 of the Consolidated Appropriations Act, 2001 further amended section 5761(c) in the IRC by substituting the following language: ''This subsection and section 5754 shall not apply to any person who relands or receives tobacco products in the quantity allowed entry free of tax and duty under chapter 98 of the Harmonized Tariff Schedule of the United States, and such person may voluntarily relinquish to the Secretary at the time of entry any excess of such quantity without incurring the penalty under this subsection. No quantity of tobacco products other than the quantity referred to in the preceding sentence may be relanded or received as a personal use quantity.''

Under this revised language in the law, travelers entering the United States, if they claim and are granted a personal use exemption, are allowed to bring U.S. manufactured tobacco products labeled for export back into the United States up to the quantity allowed entry free of tax and duty under chapter 98 of the Harmonized Tariff Schedule of the United States. In addition, a traveler claiming such a personal use exemption upon arrival at the border may voluntarily relinquish to the U.S. Customs Service any excess of such quantity without incurring a penalty under this section. Only the numerical quantity allowable under the Harmonized Tariff Schedule of the United States free of tax and duty may be considered as a personal use quantity.

In addition, section 315 of the Consolidated Appropriations Act, 2001 made the above described allowance for travelers retroactive to January 1, 2000, when the original restrictions and penalties imposed by the Balanced Budget Act of 1997 took effect.

Amendments to the Regulations

In accordance with the above described amendments to the IRC, this final rule amends the regulations at 27 CFR 275.82(i) and 275.83(d) to provide that personal use quantities allowed under the law are exempt from the restrictions and penalties applicable to reimported tobacco products. Further, the definition of ''relanding'' at 27 CFR 275.11 has been amended to delete the second sentence relating to the relinquishment of tobacco products by travelers, which is now delineated in the revisions to 27 CFR 275.82 and 275.83.

Reimportation of Unpackaged Tobacco Products

During the comment period for Notice 913, ATF noted a technical inconsistency in the language of the law at 26 U.S.C. 5754 and 5761(c). That technical inconsistency and the solution are discussed as follows.

Prior to the enactment of the ICCA 2000, section 5754 of the IRC provided that tobacco products and cigarette papers and tubes previously exported from the United States could be imported into the United States ''*only as provided in section 5704(d)*'' (emphasis added). Further, the corresponding penalty in section 5761(c) specifically exempted ''(b) and (d) of section 5704''. Thus, the importation of previously exported products under section 5704(d) was exempt from the penalty provisions in section 5761(c).

With the passage of the ICCA 2000, section 5754 was amended to provide that tobacco products and cigarette papers and tubes manufactured in the United States and labeled or shipped under the IRC for exportation may be imported or brought into the United States, after their exportation, only if such articles are either eligible to be released from customs custody ''with the partial duty exemption provided in section 5704(d) or are returned to the original manufacturer of such article as provided in section 5704(c).'' Thus, under the revised language in section 5754, products may be imported by the original manufacturer under sections 5704(c) or 5704(d).

However, a problem arises with the language of the corresponding penalty provision in section 5761(c). Section 5761(c) continues to provide a penalty for selling, receiving, or relanding tobacco products ''except as provided in (b) and (d) of section 5704.'' This is the same language used in section 5754 when it was first introduced by the Balanced Budget Act of 1997.

Thus, while section 5754 now authorizes importations under sections 5704(c) and (d), the penalty provision in 5761(c) only exempts from penalty those imports that are made under sections 5704(b) and (d). Therefore, authorized importations under 5704(c) could still be subject to the penalty imposed by section 5761(c). This appears to be a technical error in the language of the law, with a result that Congress did not intend.

After consideration of this inconsistency, ATF has reviewed the law at 26 U.S.C. 5704(d) and determined that its language is broad enough to include the importation of both packaged articles and articles that ''are not put up in packages.'' Thus, ATF has concluded that articles that might be imported under section 5704(c) can also be imported under section 5704(d) and thereby become exempt from the penalty provision in section 5761(c).

Amendments to the Regulations

In order to address this problem, ATF has made some minor amendments to the language of the regulations at 27 CFR 275.82(c) and (d) and 275.83. Pursuant to these amendments, an original manufacturer that intends to import any bulk articles manufactured in the United States and labeled for exportation may do so under 27 CFR 275.82(d) (26 U.S.C. 5704(c). Such articles will be administratively deemed to be imported or brought in under section 275.83(c) (26 U.S.C. 5704(d)). Thus, the potential penalty under section 275.83 (26 U.S.C. 5761(c)) will be avoided.

Miscellaneous Amendments

In addition to amendments described above, this final rule amended the authority cite that appears after 27 CFR 44.185 (formerly 27 CFR 290.185), Label or Notice, to include a reference to 26 U.S.C. 5704(b), which allows the Secretary to prescribe appropriate marks, labels or notices.

Regulatory Analyses and Notices

Is This a Significant Regulatory Action As Defined by Executive Order 12866?

It has been determined that this regulation is not a significant regulatory action as defined by Executive Order 12866. Accordingly, this final rule is not subject to the analysis required by this Executive Order.

How Does the Regulatory Flexibility Act Apply to This Proposed Rule?

It is hereby certified that this final rule will not have a significant economic impact on a substantial number of small entities. Accordingly, a regulatory flexibility analysis is not required. The revenue effects of this rulemaking on small businesses flow directly from the underlying statute. Likewise, any secondary or incidental effects, and any reporting, recordkeeping, or other compliance burdens flow directly from the statute. Pursuant to 26 U.S.C. 7805(f), a copy of the proposed regulation was submitted to the Chief Counsel for Advocacy of the Small Business Administration for comment on its impact on small business. No comments were received.

Does the Paperwork Reduction Act Apply to This Proposed Rule?

This final rule does not contain any new collections of information nor does it revise existing collections of information to impose new burdens. Consequently, the provisions of the Paperwork Reduction Act of 1995, 44 U.S.C. Chapter 35, and its implementing regulations, 5 CFR part 1320, do not apply to this rulemaking.

Drafting Information. The principal author of this document is Mr. Daniel Hiland, Regulations Division, Bureau of Alcohol, Tobacco and Firearms.

List of Subjects

27 CFR Part 44

Administrative practice and procedure, Aircraft, Authority delegations, Cigars and cigarettes, Claims, Customs duties and inspection, Excise taxes, Exports, Foreign trade zones, Labeling, Packaging and containers, Penalties, Surety bonds, Tobacco products, Vessels, Warehouses.

27 CFR Part 46

Authority delegations, Cigars and cigarettes, Claims, Disaster assistance, Excise taxes, Exports, Packaging and containers, Penalties, Seizures and forfeitures, Surety bonds, Tobacco products.

27 CFR Part 275

Administrative practice and procedure, Authority delegations, Cigars and cigarettes, Claims, Customs duties and inspection, Electronic fund transfer, Excise taxes, Imports, Labeling, Packaging and containers, Penalties, Reporting requirements, Seizures and forfeitures, Surety bonds, Tobacco products, Warehouses.

Authority and Issuance

Accordingly, title 27, Chapter I, Code of Federal Regulations is amended as follows:

PART 44—EXPORTATION OF TOBACCO PRODUCTS AND CIGARETTE PAPERS AND TUBES, WITHOUT PAYMENT OF TAX, OR WITH DRAWBACK OF TAX

Paragraph 1. The authority citation for part 44 continues to read as follows:

Authority: 26 U.S.C. 5142, 5143, 5146, 5701, 5703–5705, 5711–5713, 5721–5723, 5731, 5741, 5751, 5754, 6061, 6065, 6151, 6402, 6404, 6806, 7011, 7212, 7342, 7606, 7805; 31 U.S.C. 9301, 9303, 9304, 9306.

Par. 2. The authority citation that appears after § 44.185 is revised to read as follows:

§ 44.185 Label or notice.

* * * * *

(26 U.S.C. 5704, 5723)

PART 46—MISCELLANEOUS REGULATIONS RELATING TO TOBACCO PRODUCTS AND CIGARETTE PAPERS AND TUBES

Par. 3. The authority citation for part 46 is revised to read as follows:

Authority: 18 U.S.C. 2341–2346, 26 U.S.C. 5704, 5708, 5751, 5754, 5761–5763, 6001, 6601, 6621, 6622, 7212, 7342, 7602, 7606, 7805; 44 U.S.C. 3504(h), 49 U.S.C. 782, unless otherwise noted.

Par. 4. Section 46.166 is revised to read as follows:

§ 46.166 Dealing in tobacco products.

(a) All tobacco products purchased, received, possessed, offered for sale, sold or otherwise disposed of, by any dealer must be in proper packages which bear the mark or notice as prescribed in parts 270 and 275 of this chapter. Tobacco products may be sold, or offered for sale, at retail from such packages, provided the products remain in the packages until removed by the customer or in the presence of the customer. Where a vending machine is used, tobacco products must similarly be vended in proper packages or directly from such packages.

(b) Tobacco products manufactured in the United States and labeled for exportation under chapter 52 of title 26, U.S.C. may not be sold or held for sale for domestic consumption in the United States unless such articles are removed from their export packaging and repackaged by the original manufacturer into new packaging that does not contain an export label. This applies to articles labeled for export even if the packaging or the appearance of such packaging to the consumer of such articles has been modified or altered by a person other than the original manufacturer so as to remove or conceal or attempt to remove or conceal (including by placement of a sticker over) the export label.

(c) For penalty and forfeiture provisions applicable to the selling, relanding or receipt of articles which have been labeled or shipped for exportation, see § 275.83 of this chapter.

PART 275—IMPORTATION OF TOBACCO PRODUCTS AND CIGARETTE PAPERS AND TUBES

Par. 5. The authority citation for part 275 continues to read as follows:

Authority: 18 U.S.C. 2342; 26 U.S.C. 5701, 5703, 5704, 5705, 5708, 5712, 5713, 5721, 5722, 5723, 5741, 5754, 5761, 5762, 5763, 6301, 6302, 6313, 6404, 7101, 7212, 7342, 7606, 7652, 7805; 31 U.S.C. 9301, 9303, 9304, 9306.

Par. 6. In § 275.11, the definition for ''Relanding'' is amended by removing the second sentence.

Par. 7. Section 275.82 is revised to read as follows:

§ 275.82 Restrictions on tobacco products labeled for export.

(a) The provisions of this section apply to tobacco products and cigarette papers and tubes manufactured in the United States and labeled for exportation under parts 44 and 270 of this chapter.

(b) Articles described in paragraph (a) of this section may be transferred to or removed from the premises of a manufacturer or an export warehouse proprietor only if such articles are being transferred or removed without tax as provided in this part.

(c) Articles described in paragraph (a) of this section may only be imported or brought into the United States, after their exportation, under the provisions of 26 U.S.C. 5704(d), by release from Customs custody for delivery to the original manufacturer of such tobacco products or cigarette papers or tubes or to the proprietor of an export warehouse authorized by such manufacturer to receive such articles. These products are transferred in bond and are released from Customs custody without payment of that part of the duty attributable to internal revenue tax.

(d) Articles described in paragraph (a) of this section that are not put up in packages may be imported or brought into the United States under 26 U.S.C. 5704(c) by release from Customs custody without payment of tax for delivery to the original manufacturer of such articles. However, because such articles are also eligible for release under 26 U.S.C. 5704(d), such articles will be treated as though released under section 5704(d), due to the penalty provisions in section 5761(c).

(e) Articles described in paragraph (a) of this section may not be sold or held for sale for domestic consumption in the United States unless such articles are removed from their export packaging and repackaged by the original manufacturer into new packaging that does not contain an export label. The new packages, marks and notices must conform to the requirements of 27 CFR part 270.

(f) The provisions of this section shall apply to articles labeled for export even if the packaging or the appearance of such packaging to the consumer of such articles has been modified or altered by a person other than the original

manufacturer so as to remove or conceal or attempt to remove or conceal (including by placement of a sticker over) any export label.

(g) For purposes of this section, an article is labeled for export or contains an export label if it bears the mark, label, or notice required by § 44.185 of this chapter.

(h) For purposes of this section, references to exportation shall be treated as including a reference to shipment to the Commonwealth of Puerto Rico.

(i) The provisions of this section do not apply to any person who, when entering U.S. manufactured tobacco products labeled for export under parts 44 and 270 of this chapter, claims and is granted an exemption from duty and tax for such products under chapter 98 of the Harmonized Tariff Schedule of the United States. The quantity of tobacco products entered may not exceed the quantity limit imposed on such products under the applicable tariff provision. A traveler claiming an exemption under this subsection upon arrival at the border may voluntarily relinquish to the U. S. Customs Service at the time of entry any excess of such quantity without incurring the penalty under section § 275.83.

(j) For civil penalties and forfeiture provisions related to violations of this section, see § 275.83. For a criminal penalty applicable to any violation of this section see 26 U.S.C. 5762(b).

Par. 8. Section 275.83 is revised to read as follows:

§ 275.83 Penalties and forfeiture for products labeled or shipped for export.

Except for the return of exported products that are specifically authorized under § 275.82(b) and (c):

(a) Every person who sells, relands, or receives within the jurisdiction of the United States any tobacco products or cigarette papers or tubes which have been labeled or shipped for exportation under parts 44 and 270 of this chapter;

(b) Every person who sells or receives such relanded tobacco products or cigarette papers or tubes; and,

(c) Every person who aids or abets in such selling, relanding, or receiving, shall, in addition to the tax and any other penalty provided for in title 26 U.S.C., be liable for a penalty equal to the greater of $1,000 or 5 times the amount of the tax imposed by title 26 U.S.C. All tobacco products and cigarette papers and tubes relanded within the jurisdiction of the United States shall be forfeited to the United States and destroyed. All vessels, vehicles and aircraft used in such relanding or in removing such products, papers, and tubes from the place where relanded, shall be forfeited to the United States.

(d) The provisions of this section do not apply to any person who, when entering U.S. manufactured tobacco products labeled for export, claims and is granted an exemption from duty and tax for such products under chapter 98 of the Harmonized Tariff Schedule of the United States. The quantity of tobacco products entered may not exceed the quantity limit imposed on such products under the applicable tariff provision. A traveler claiming an exemption under this subsection upon arrival at the border may voluntarily relinquish to the U. S. Customs Service at the time of entry any excess of such quantity without incurring the penalty under this section.

(e) For purposes of this section, references to exportation shall be treated as including a reference to shipment to the Commonwealth of Puerto Rico.

Signed: July 9, 2001.

Bradley A. Buckles,

Director.

Approved: August 9, 2001.

Timothy E. Skud,

Acting Deputy Assistant Secretary, (Regulatory, Tariff and Trade Enforcement).

[FR Doc. 01–21857 Filed 8–28–01; 8:45 am]

BILLING CODE 4810–31–P

DEPARTMENT OF TRANSPORTATION

Coast Guard

33 CFR Part 165

[COTP Western Alaska–01–002]

RIN 2115–AA97

Safety Zone; Gulf of Alaska, Southeast of Narrow Cape, Kodiak Island, Alaska

AGENCY: Coast Guard, DOT.

ACTION: Temporary final rule; correction.

SUMMARY: The Coast Guard is correcting the effective period for a temporary final rule for a safety zone in the Gulf of Alaska, southeast of Narrow Cape, Kodiak Island, Alaska, that was published in the **Federal Register** on August 21, 2001. This correction is being made because of a late revision of a rocket launch date. This correction changes the effective period from 2 p.m. to 7:30 p.m. each day from August 31, 2001, through September 15, 2001, to the same hours on a single day, September 17, 2001.

DATES: Effective on August 29, 2001.

ADDRESSES: The public docket for this rulemaking is maintained by Coast Guard Marine Safety Office Anchorage, 510 ''L'' Street, Suite 100, Anchorage, AK 99501. Materials in the public docket are available for inspection and copying at Coast Guard Marine Safety Office Anchorage. Normal office hours are 7:30 a.m. to 4 p.m., Monday through Friday, except Federal holidays.

FOR FURTHER INFORMATION CONTACT: LCDR Diane Kalina, Marine Safety Office Anchorage, at (907) 271–6700.

SUPPLEMENTARY INFORMATION: The Coast Guard published a temporary final rule in the **Federal Register** on August 21, 2001, (66 FR 43774) establishing a temporary safety zone in the Gulf of Alaska, southeast of Narrow Cape, Kodiak Island, Alaska, effective from 2 p.m. on August 31, 2001 through 7:30 p.m. on September 15, 2001. The zone is needed to protect the safety of persons and vessels operating in the vicinity during a rocket launch from the Alaska Aerospace Development Corporation (AADC), Narrow Cape, Kodiak Island facility. The AADC recently revised the launch date to September 17, 2001. The Coast Guard is correcting the effective date of the rule to correspond with the new schedule for the launch date. This correction changes the 16-day effective period, between August 31 and September 15, 2001, to a single day, September 17, 2001.

In rule FR Doc. 01–21083 published on August 21, 2001 (66 FR 43774), make the following corrections. On page 43775, in the first column, on lines 3 through 5, remove ''each day between August 31, 2001 and September 15, 2001'' and replace it with ''on September 17, 2001''. On page 43775, in the first column, on lines 27 through 29, remove ''each day between August 31, 2001 and September 15, 2001'' and replace it with ''on September 17, 2001''. On page 43775, in the second column, on lines 36 and 37, remove ''from August 31, 2001 to September 15, 2001'' and replace it with ''on September 17, 2001''. On page 43776, in the second column, on lines 4 through 6, (paragraph (b)), remove ''from 2 p.m. on August 31, 2001, until 7:30 p.m. on September 15, 2001'' with ''from 2 p.m. through 7:30 p.m. on September 17, 2001''.

Dated: August 22, 2001.

W.J. Hutmacher,

Captain, U.S. Coast Guard,Captain of the Port, Western Alaska.

[FR Doc. 01–21833 Filed 8–28–01; 8:45 am]

BILLING CODE 4910–15–P

DEPARTMENT OF VETERANS AFFAIRS

38 CFR Part 3

RIN 2900–AK69

Duty To Assist

AGENCY: Department of Veterans Affairs.

ACTION: Final rule.

SUMMARY: This document amends the Department of Veterans Affairs (VA) adjudication regulations to implement the provisions of the Veterans Claims Assistance Act of 2000 (the VCAA), which was effective on November 9, 2000. The intended effect of this regulation is to establish clear guidelines consistent with the intent of Congress regarding the timing and the scope of assistance VA will provide to a claimant who files a substantially complete application for VA benefits or who attempts to reopen a previously denied claim.

DATES: Effective Date: This rule is effective November 9, 2000, except for the amendment to 38 CFR 3.156(a), which is effective August 29, 2001.

Applicability Dates: Except for the amendment to 38 CFR 3.156(a), the second sentence of 38 CFR 3.159(c), and 38 CFR 3.159(c)(4)(iii), the provisions of this final rule apply to any claim for benefits received by VA on or after November 9, 2000, as well as to any claim filed before that date but not decided by VA as of that date. The amendment to 38 CFR 3.156(a), the second sentence of 38 CFR 3.159(c), and 38 CFR 3.159(c)(4)(iii) apply to any claim to reopen a finally decided claim received on or after August 29, 2001.

FOR FURTHER INFORMATION CONTACT: Janice Jacobs, Lead Consultant, Strategy Development Staff, Compensation and Pension Service, Veterans Benefits Administration, 810 Vermont Avenue, NW, Washington, DC 20420, telephone (202) 273–7223.

SUPPLEMENTARY INFORMATION: In the Veterans Claims Assistance Act of 2000, Pub. L. 106–475 (the VCAA), Congress amended sections 5102 and 5103 of Title 38, United States Code, and added new sections 5100 and 5103A, establishing new duties for VA in the claims development and adjudication process. Congress also amended section 5107 by deleting the concept of a ''well-grounded claim'' previously contained in that section, while retaining the claimant's responsibility to present and support a claim for benefits. In section 5103A(f) Congress stated that nothing in section 5103A was to be construed to require VA to reopen a claim that has been disallowed except when new and material evidence is presented or secured as described in section 5108.

In the **Federal Register** of April 4, 2001 (66 FR 17834), VA published a proposal to amend 38 CFR 3.159 to implement the VCAA. Interested persons were invited to submit comments on or before May 4, 2001. We received comments from various organizations and individuals, including the American Legion and the National Veterans Legal Services Program (jointly submitted); Paralyzed Veterans of America; Vietnam Veterans of America; Disabled American Veterans; National Organization of Veterans Advocates, Inc.; State of Florida Department of Veterans' Affairs; the National Veterans Organization of America, Inc.; and other interested persons.

Definitions

Competent Medical Evidence and Competent Lay Evidence. We proposed to define ''competent medical evidence'' in § 3.159(a)(1) to mean evidence provided by a person who, through education, training, or experience, is qualified to offer medical diagnoses, statements or opinions. We proposed that the term would include statements conveying sound medical principles found in medical treatises, medical and scientific articles, and research reports or analyses. We proposed to define ''competent lay evidence'' in § 3.159(a)(2) to mean evidence not requiring that the person offering it have specialized education, training, or experience. We proposed that lay evidence be competent if offered by someone who has knowledge of facts or circumstances and conveys matters that can be described by a lay person. Accordingly, while a lay person would not be competent or qualified to offer medical opinions or to diagnose a medical condition, a claimant or other lay person would be competent to describe symptoms of disability experienced or observed in him/herself or others. These definitions are consistent with those discussed in the legislative history of the VCAA, 146 Cong. Rec. H9915 (daily ed. Oct. 17, 2000) (explanatory statement on H.R. 4864, as amended), and reflect existing case law governing the VA claims adjudication process.

One commenter stated that we should delete these definitions as unnecessary. Other commenters objected to defining these terms by regulation, stating that to do so may lead VA adjudicators to reject evidence preliminarily at the development stage, or to become ''mired in technical assessments of the competency of the evidence.'' Consideration of the competency of the evidence is a necessary step inherent in the adjudication process and one with which VA adjudicators are already familiar. In our view, defining these terms fosters a consistent application of these concepts in the adjudication process, and ensures that a claimant is likewise aware of the types and nature of evidence that will help substantiate a claim. Therefore, we have retained these definitions in the regulatory language.

Two of these same commenters stated, alternatively, that because an assessment of the competency of the evidence should always be a part of VA's decision-making process, the inclusion of the word ''competent'' in the regulatory definition was therefore redundant. As previously stated, we believe there is value in including this definition in the regulatory language so that the claimant understands how this term, used by Congress in the VCAA and discussed in the legislative history of the Act, is applied to the evidence received by VA in support of a claim.

Another commenter suggested that we revise the definition to state that competent lay or medical evidence must also be ''credible.'' The VCAA refers to competent evidence in the context of determining when a VA medical examination or medical opinion is necessary. It does not require that the evidence also be credible. Moreover, credibility is what a VA decisionmaker determines in weighing the competent evidence of record. It is not a requirement to be met in order for evidence to be considered competent. Therefore, we have made no change to the proposed regulatory language based on this comment.

With particular respect to the proposed definition of ''competent medical evidence,'' one commenter thought the inclusion of medical treatises and other similar authoritative medical writings resulted in an overly broad definition that would lead VA decisionmakers to misuse these materials by relying on them to deny a claim. However, VA intentionally broadened this definition to encompass these materials for the benefit of the claimant who may want to submit such materials, which are commonly found on the Internet or from other sources, in support of a claim. VA adjudicators have always had access to authoritative medical writings, such as *Dorland's Medical Dictionary* and the *Merck Manual,* as aids in deciding claims. In fact, 38 CFR 4.130, the schedule of ratings for mental disorders, specifically incorporates the American Psychiatric Association's *Diagnostic and Statistical*

Manual of Mental Disorders, Fourth Edition, (DSM IV) and refers to its use as the basis for the schedule's nomenclature and diagnostic criteria. In our view, both VA and the claimant benefit from the claimant's awareness that ''competent medical evidence'' includes such materials and that he or she may rely upon them to support a claim. Therefore, no change to the regulatory language has been made based on this comment.

Regarding the proposed definition of competent lay evidence specifically, one commenter suggested that the regulation should provide that VA would accept any lay statement as credible unless rebutted by affirmative evidence. This suggestion reflects the manner in which VA treated lay evidence on the issue of service incurrence in determining whether a claim was well grounded. In pre-VCAA procedures, lay evidence was generally accepted as credible for the purpose of meeting the evidentiary threshold well-grounded-claim requirement of showing that there was some evidence of an event, injury, or disease in service. Nonetheless, when a well-grounded claim was considered on its merits, VA claim procedures required that the decisionmaker consider all the evidence of record, assigning appropriate weight to both the lay and medical evidence. We note, as well, that if VA were to accept any claimant's statement as true on its face to establish the existence of an in-service event, injury or disease, without considering the veteran's service records and other evidence, this practice would conflict with the intent of 38 U.S.C. 1154(b). Under section 1154(b), in the case of a combat veteran, VA must accept satisfactory lay evidence of service incurrence or aggravation of an injury or disease alleged to have been incurred or aggravated in combat service, if such lay evidence is consistent with the circumstances, conditions, or hardships of this combat service even if there is no official record of such incurrence or aggravation. To permit every claimant, whether or not he or she served in combat, and whether or not the claimed injury is combat-related, to be able to establish in-service incurrence or aggravation based on the claimant's lay statement alone would nullify the meaning of section 1154(b). For all of these reasons, we have made no change to the regulatory language based on these comments.

Another commenter wanted us to make clear that lay evidence includes statements from the claimant. Not every claimant is a lay person, however; claims for benefits are also filed by physicians and nurses and their statements might qualify as competent medical evidence. Therefore, we have not made the change to the proposed regulatory language suggested by this comment.

One commenter stated that the regulation should indicate that lay evidence may be considered as partially competent so that a VA decisionmaker will not disregard a lay statement in its entirety if it should also happen to contain a medical opinion which would not be considered competent medical evidence. We decline to make any change in the proposed regulatory language based on this comment because VA decisionmakers are already obligated to consider all the evidence of record, both lay and medical, when deciding a claim. This would require VA adjudicators to consider those portions of the lay evidence submitted that are competent. Amending the regulation as suggested by this comment would result in an unnecessary redundancy.

Substantially Complete Application. We proposed to define a ''substantially complete application'' for benefits in § 3.159(a)(3) as one that contains the claimant's name; his or her relationship to the veteran, if applicable; service information, if applicable; the benefit claimed and any medical conditions on which it is based; and the claimant's signature. If applicable, as in claims for nonservice-connected disability or death pension, and parents' dependency and indemnity compensation, we proposed that a substantially complete application must also include a statement of income. This information is generally sufficient for VA to identify the benefit claimed, and determine whether the claimant is potentially eligible for it. This is basic information VA needs in order to inform a claimant of the types of information and evidence that would be required to substantiate a claim.

One commenter suggested that we clarify the requirement of ''service information'' to state, instead, ''sufficient service information for the VA to verify the duration and character of the claimed service, if applicable.'' This commenter stated that such a change would reflect VA's duty to assist the claimant in verifying service lest the language of the regulation be interpreted to mean that the claimant has the sole responsibility of establishing qualifying service. This is a reasonable suggestion and reflects current VA procedure. Therefore, the proposed regulatory definition of a ''substantially complete application'' in § 3.159(a)(3) has been changed to require ''sufficient information for VA to verify the claimed service, if applicable.''

Another commenter objected to the proposed requirement that a substantially complete application identify the benefit sought, on the grounds that it should be VA's burden to determine all the benefits to which a claimant is entitled. Under section 5107(a), it is the claimant's responsibility to present and support a claim for benefits. Requiring a claimant to identify the benefit sought is a necessary prerequisite for VA to inform a claimant of the information and evidence necessary to substantiate the claim for that benefit. Therefore, no change to the proposed regulatory language has been made based on this comment.

Another commenter indicated that the current application form, VA Form 21–526, Veteran's Application for Compensation or Pension, is too long, and that instead of defining ''substantially complete application,'' VA should revise VA Form 21–526. This form is designed to elicit more information than is required to file a substantially complete application for benefits. However, if it was completed in its entirety by the claimant, the information on the form would enable VA to immediately begin development of the claim because it requests the identity of all relevant evidence including medical treatment records. VA would not then be required to send a letter to the claimant seeking to identify relevant records as it must do if the claimant submits only the minimal information necessary to file a substantially complete application. This same commenter noted that the requirement in the regulation for the signature of the claimant is at odds with the new Veterans On-Line Application Process (VONAPP), a recent initiative of VA, in which the agency accepts applications from claimants via the Internet. Currently, VA still requires a signature from the claimant in conjunction with such applications, although it is working cooperatively with other agencies on establishing secure on-line signature procedures. Therefore, we have not deleted this definition per this commenter's suggestion.

Event In Service. We proposed to define the term ''event'' in § 3.159(a)(4) to mean a ''potentially harmful occurrence,'' such as would be associated with a particular duty assignment or place of duty because there are circumstances in service other than an injury or disease that, under 38 U.S.C. 1110, could meet the criteria of an ''incurrence'' in service for

establishing entitlement to service-connected compensation benefits. Nonetheless, some commenters asserted that the definition could be used to winnow out claims when, in the opinion of the VA decisionmaker, the in-service event is not perceived as ''potentially harmful.'' One commenter stated that any occurrence in service could be seen as ''potentially harmful.''

We agree that many events in service could be seen as potentially harmful, and that the assessment of whether an event in service was harmful is necessarily a retrospective one. The definition of ''event'' was intended to be expansive and liberal, not limiting. As reflected in the Supplementary Information accompanying the proposed rule, we believed the term could encompass such ''events'' as exposure to environmental hazards as well as such activities as parachute jumping or being a forward observer, although these events did not result in a specific injury or disease or aggravation of a pre-existing condition while in service. In our view, it is helpful for a claimant to understand that actual treatment in service for a medical condition is not an absolute requirement to establish service connection, and we see utility in defining this term for the claimant. To ensure its expansive interpretation, we have revised the proposed regulatory language to state: ''For purposes of paragraph (c)(4)(i), 'event' means 'one or more incidents associated with places, types, and circumstances of service giving rise to disability.' '' This definition is derived from the language of section 1154(a) which provides that in claims for service-connected compensation, consideration will be given to the ''places, types, and circumstances of such veteran's service as shown by such veteran's service record, the official history of each organization in which such veteran served, such veteran's medical records, and all pertinent medical and lay evidence . . .'' This definition would permit a VA decisionmaker to consider any number of events, including exposures to environmental hazards as an event in service that could have led to the claimed disability for which the veteran seeks compensation.

Information. Some questions have been raised about the meaning of the term ''information,'' which appears in the VCAA with respect to the information necessary to complete an application and the information and evidence necessary to substantiate a claim. Although the VCAA itself does not define the term, its legislative history gives guidance as to what Congress intended the term to mean. The history suggests that Congress was referring to non-evidentiary facts that are necessary to complete an application or to substantiate claim. *See* 146 Cong. Rec. H9914, H9914 (daily ed. Oct. 17, 2000) (identifying Social Security number and addresses as types of ''information'' necessary to substantiate a claim). We have defined the term accordingly in § 3.159(a)(5).

VA's Duty To Notify Claimants of Necessary Information or Evidence To Substantiate a Claim

We proposed in § 3.159(b)(1) that, if VA receives an application for benefits that is substantially complete, VA would notify the claimant of the information and medical or lay evidence required to substantiate the claim. As explained in the Supplementary Information, it is clear from the legislative history of the VCAA that Congress intended the notice to inform the claimant of the type of medical evidence required, such as diagnoses or opinions as well as the type of lay evidence that could be used to substantiate the claim. We further proposed that the notice would also inform the claimant which information and evidence the claimant is to provide and which information and evidence VA will attempt to obtain on the claimant's behalf. This proposed regulatory language mirrored the provisions in section 5103A.

We received a comment stating that the regulation should require VA, at the point in time when any evidence has been received in a claim for compensation benefits, to determine whether that evidence satisfies a necessary element of the claim and so advise the claimant. We decline to revise the regulation to accommodate this suggestion; such a regulatory requirement would necessitate multiple reviews of a single claim and is administratively unworkable. It would, moreover, increase the time it takes to decide a single claim, contributing to the backlog of claims that await processing. The intent of Congress, as indicated in the plain language of the VCAA and in the legislative history, is that VA advise a claimant as to the evidence and information necessary to substantiate a claim once VA receives a substantially complete application. There is no indication that Congress intended that VA review each claim and advise the claimant every time any evidence relevant to it is received. When a decision is reached on a claim, the rating decision document will cite all relevant evidence obtained and considered, as well as any relevant evidence not obtained or considered. That rating decision document is shared with the claimant as part of our notification procedures.

Some commenters stated that the regulation should provide for multiple notices to claimants of the information and evidence required to be submitted by them. We have made no change based on this suggestion because multiple notices would also be administratively unworkable. Development of evidence is a shared responsibility, with the claimant having the responsibility to present and support a claim for benefits. 38 U.S.C. 5107(a). If VA provides a clear and understandable notice to the claimant of what information and evidence is necessary to substantiate the claim, and what portion of that information and evidence VA will try to obtain, and what portion the claimant is required to provide, we believe we have satisfied our statutory duty. The notice will also provide the claimant with a phone number to reach the VA employees actually handling the claim, and the claimant can easily contact VA if he or she has additional concerns or questions.

Other commenters stated that this regulatory provision should state in more specific detail what will be required to be contained in every notice to the claimant on what is needed to establish entitlement for an individual claim. It is neither reasonable nor administratively feasible to require by regulation the level of specificity advocated by these commenters. The statutory notice required by the VCAA occurs at an early point in the claims process when the claimant often has not yet identified the evidence and information relevant to the claim, and VA does not yet know what kinds of specific evidence to try to obtain on behalf of the claimant. Without knowing what this evidence is, VA cannot advise the claimant as to whose responsibility it will be to obtain it. VA attempts to be as specific as it can in these notices. However, the content of VA's notice to the claimant depends on the amount of information and evidence VA already has regarding an individual claim, and cannot precisely be defined by regulation. Therefore, we have made no change to the proposed regulatory language based on these comments.

Another commenter stated that the regulation should specifically state that the notice required under section 5103(a) will be sent to the claimant before a decision on the claim has been made. We agree and have changed the language of § 3.159(b)(1) to state that VA will send the required statutory notice ''When VA receives a complete or

substantially complete application for benefits,'' rather than ''If VA receives'' this application.

One commenter stated that the regulation should require VA to tell the claimant a date certain for the submission of requested information and evidence. It has always been VA's practice to advise the claimant that he or she has one year to submit requested information or evidence, although it was requesting that the claimant submit the information or evidence within a shorter period of time. This procedure enables VA to take action on the claim as quickly as possible. There are no plans to change this procedure; VA will continue to advise a claimant that he or she has one year to submit requested evidence, as indicated in § 3.159(b)(1) of the regulation. Additionally, we have not revised the proposed regulatory language to reflect the period of time in which VA will request that the claimant submit the requested information or evidence, because VA would like to retain the flexibility to vary the time frame it currently specifies if in the future it is appropriate to do so.

One commenter stated that the regulation should provide that if VA receives evidence that is inadequate to substantiate the claim, VA should contact the claimant and give him or her the opportunity to correct the inadequacy or bolster the evidence. In our view, the regulatory language ensures that, with the claimant's cooperation, VA will have all the evidence relevant to the claim before it at the time a decision is made on the claim. Whether all of this relevant evidence is sufficient to substantiate the claim is a determination that is not made until the claim is adjudicated. If all relevant evidence was obtained and considered but it is insufficient to establish entitlement, VA issues a rating decision that informs the claimant of the reason(s) why entitlement was not established. The claimant has the opportunity to appeal the decision if it is unfavorable, which gives the claimant the opportunity to present additional evidence to support the appeal. This procedure is consistent with long-standing adjudication practice which was not altered by the VCAA. Therefore, no change to the regulatory language has been made based on this comment.

Mirroring the statutory language in section 5103(b), we proposed in § 3.159(b)(1) that, if VA does not receive the information and evidence requested from the claimant within one year of the date of the notice to the claimant, VA cannot pay or provide any benefits based on that application. We proposed that VA would give a claimant a reasonable period of time to respond to the request for information or evidence, and if the claimant fails to respond, VA may decide the claim based on all the information and evidence of record. Some decisions would be grants of benefits while some decisions would be denials of benefits. We stated at § 3.159(b) that if the claimant subsequently submitted the requested information or evidence within one year of the date of VA's request for it, VA would make another decision. We note that if such new information or evidence warrants a VA examination or further development, VA would take whatever action is necessary to reconsider the claim on this new information or evidence.

A number of commenters objected to this proposed provision for various reasons. Some commenters felt that VA's failure to wait one full year for a claimant to respond to a request for information or evidence would discourage claimants from submitting the requested evidence. This is speculation that VA's long-standing claims process does not corroborate. In our experience, claimants are generally cooperative with VA's efforts to help them substantiate their claims, and respond to VA requests for information as quickly as possible, and usually within the suggested time frame for doing so.

Other commenters interpreted section 5103(b) to provide that VA is prohibited from deciding a claim without waiting for one full year for information or evidence requested from the claimant. We believe such an interpretation is unreasonable and would clearly contravene the intent of the VCAA. Section 5103(b) is essentially an effective date provision governing the earliest date from which benefits may be paid if a claimant submits requested information and evidence. If interpreted as preventing VA from taking award action until the one year period expired, VA would be unable to grant a benefit when the claimant has not responded to a request for information or evidence, even though VA has obtained evidence establishing that the claimant is entitled to that benefit. Moreover, the procedure as proposed is identical to the manner in which VA had adjudicated claims for many years prior to the VCAA and *Morton* v. *West*, 12 Vet. App. 477 (1999), *remanded sub nom. Morton* v. *Gober*, 243 F.3d 557 (Fed. Cir. 2000), *opinion withdrawn and appeal dismissed*, 14 Vet. App. 174, the court decision that led to the passage of the VCAA. It is a procedure familiar to veterans' service organizations and other veterans' advocates. Moreover, it is a procedure that is responsive to the interests of Congress as well as veterans' advocates in improving the timeliness of VA claims processing. It is our experience that once evidence is not received in response to a request for it, extending the time period does not improve the chances of receiving it. Therefore, no change to the proposed regulatory language has been made based on these comments.

However, we have made one change from the proposed rule. Rather than allowing VA to proceed to decide a claim if the claimant has not responded ''within a reasonable period of time'' to a request for information or evidence or a request for any pertinent evidence in the claimant's possession, the final rule will allow VA to proceed to decide the claim if the claimant has not responded ''within 30 days'' of such requests. Specifying the period in which a claimant may respond before VA may decide the claim allows every claimant to know in advance the minimum time he or she will have to respond to VA's request. This rule will not require VA to decide a claim 30 days after its request if the claimant has not responded. It will merely allow VA to proceed on the claim. Furthermore, a claimant need not necessarily provide the evidence and information necessary to substantiate the claim within 30 days. A claimant would, however, be required to ''respond'' in some fashion to VA's request in order to have VA delay further action on the claim to give the claimant time to procure and submit the requested information and evidence. Such a response could merely request VA to wait beyond the 30-day period while the claimant attempts to gather evidence.

One commenter stated that VA should decide a claim without waiting for one year only if the claimant has fully responded to the request for information or evidence, or if VA is granting the claim. We agree that if VA can grant the claim based on the evidence of record it has obtained without the information or evidence requested from the claimant, it should do so as quickly as possible, and this regulation is consistent with such action. To clarify that this evidence may include VA medical examinations or opinions, we have revised the regulatory language at § 3.159(b)(1) to state that VA's decision on the claim would be based on all ''information and evidence contained in the file, including information and evidence it has obtained on behalf of the claimant and any VA medical examinations or medical opinions.''

However, nothing in the VCAA expressly requires that VA keep a claim

pending when the claimant has failed to respond to requests for information or evidence within 30 days. The duty to assist is not ''always a one-way street'; the claimant cannot passively wait for VA's assistance in circumstances where he or she may or should have information that is essential to obtaining supporting evidence. *Zarycki* v. *Brown*, 6 Vet. App. 91 (1993); *Wamhoff* v. *Brown*, 8 Vet. App. 517 (1996). Nonetheless, in cases where the claimant has failed to respond, VA's case management system encourages personal phone contacts with the claimant during which the veterans service center representative can obtain by phone the information requested of the claimant. The case management process also ensures that VA does not take any action on a claim without first informing the claimant of what it needs to decide the claim, and this assurance is reflected in the regulatory language at § 3.159(b)(1).

Even in cases where a claimant fails to respond to VA's request for information and evidence, and the claim is denied based on the other evidence of record, the claimant still has another one year after the notification of the denial to appeal the denial of the claim. At that time, he or she has another opportunity to submit the requested evidence or new evidence. In addition, the claimant has a right to two de novo reviews of the claim, one by a Decision Review Officer and another by the Board of Veterans' Appeals. In our view, the claimant suffers no prejudice from this long-standing practice of deciding a claim based on the evidence of record when the claimant has failed to timely respond to requests for information or evidence. Therefore, we have maintained the proposed language codifying this procedure. However, we have revised the proposed language to clarify that the one-year deadline applies to both the information and evidence necessary to substantiate the claim and that the claimant is to provide, as well as to the evidence in the claimant's possession that pertains to the claim.

A comment from one service organization stated that this regulation failed to recognize that under § 3.156(b) and § 20.1304(b), evidence submitted in connection with an appeal will be considered in connection with the claim on appeal even if it was not received within one year of the date VA requested it. We recognize that there is a potential conflict between §§ 3.156(b) and 20.1304(b) and section 5103(b)(1) and proposed § 3.159(b)(1). A possible technical amendment to section 5103(b)(1), which would eliminate the potential conflict, is being considered. If the amendment does not materialize, VA will have to address the implications section 5103(b)(1) has for §§ 3.156(b) and 20.1304(b).

One commenter stated that if VA decides a claim less than one year from the time it requests information or evidence from a claimant, the claimant may confuse the one-year time period in which to submit requested information or evidence with the one year time period allowed by statute for the claimant to file an appeal. *See* 38 U.S.C. 7105. The one-year time periods are mandated by statute, and VA cannot alter them by regulation. Therefore, no change to the regulatory language has been made based on this comment.

Several commenters argued for a ''good cause'' exception for extending the statutory one year time period for a claimant to submit requested information or evidence, to accommodate claimants who are ''seriously disabled,'' mentally incompetent or who have other hardships caused by poverty, lack of access to transportation, or remoteness of domicile. Two commenters cited the difficulty experienced by claimants who try to obtain service medical records to submit to VA as the basis for a good cause exception. We have made no change to the proposed regulatory language to accommodate such an exception. There is no statutory authority permitting VA to create such an exception. Section 5103(b)(1) states that if VA does not receive the information or evidence to be provided by a claimant ''within one year from the date of such notification, no benefit may be paid or furnished'' based on that application. The statutory scheme created by Congress places significant duties on VA to obtain the evidence relevant to a claim. However, the VCAA reiterated that it is the claimant's duty to present and support a claim for benefits, including the duty to submit information and evidence as designated by VA in its statutory notice to the claimant. Clearly, Congress envisioned one year to be an adequate amount of time for the claimant to cooperate with VA's efforts by submitting requested information or evidence. This information or evidence would include such things as a stressor statement in a claim for compensation for PTSD, or the name and address of treating physicians. We also note in response to the commenters who cited the difficulty of obtaining service medical records that in a compensation claim it is the responsibility of VA rather than the claimant to obtain those records if they are relevant to the claim and maintained or held by a governmental entity.

Duty To Inform a Claimant When An Application Is Incomplete

We proposed in § 3.159(b)(2) that, if VA receives an incomplete application in which the claimant has failed to provide the minimal information required to permit VA to begin development of the claim, we would defer assistance until the claimant substantially completed the application. This provision is plainly consistent with section 5103A(a)(3). Nevertheless, several commenters objected to this proposed language, reflecting a misunderstanding that VA would deny claims contained in an incomplete application. As the regulatory language clearly reflects, VA will defer assistance on incomplete applications, not deny them. Therefore, no change to the regulatory language based on these comments has been made.

General Rule; VA's Duty To Assist a Claimant in Obtaining Evidence

We proposed in § 3.159(c)(1) that VA will make reasonable efforts to help a claimant obtain relevant records from non-Federal-agency sources including records from private medical care providers, current or former employers, and other non-Federal government sources. We also proposed to retain the prior language of § 3.159 providing that VA will not pay any fees charged by a custodian of the records.

One commenter stated that VA should request congressional authorization to pay for costs associated with obtaining private medical records, a suggestion that is beyond the scope of this rulemaking. Other commenters stated that VA should budget funds to pay for private medical records, also an issue that is beyond the scope herein. Two commenters stated that VA should make an exception and pay for private records for claimants who are destitute or mentally incompetent. Because VA has no statutory authority to expend funds in this manner, we cannot create the exceptions suggested by these comments.

Consistent with the language of section 5103A(b)(1), we proposed in paragraphs (1)(i) and (2)(i) of § 3.159(c) that the claimant must adequately identify any Federal and non-Federal records, providing enough information to enable VA to request them. We proposed that the claimant should identify the custodian of the records, the approximate time frame covered by them, and in the case of medical treatment records, the condition for which treatment was provided. One

commenter stated that to require a claimant to identify the custodian of the records would be ''unduly burdensome.'' One commenter cited the difficulty this may present for claimants with memory problems. This commenter stated that the claimant should be required to give VA only enough information to allow VA to pursue retrieval of the records. We agree that VA needs only enough information to try to retrieve the record, but believe that the identity of the custodian of the record is critical and reasonable information to request of the claimant. It would be very impractical and inefficient for VA to try to obtain records without knowing who has them. Therefore, no change to the proposed regulatory language requiring the claimant to identify who has custody of the records has been made based on this comment.

One commenter objected to the language of the regulation at § 3.159(c)(1)(i), (c)(2)(i), and (c)(3) that provides that a claimant's failure to adequately identify existing records ''may result in a denial of the benefit sought.'' In this commenter's view, this language would encourage adjudicators ''to think in terms of denial of the claim'' particularly because of the regulatory authority in § 3.159(b)(1) providing that VA may decide a claim on the evidence of record if a claimant fails to timely respond to a request for information or evidence. Although this proposed regulatory language reflects a procedure that has been in place for many years, long before the well-grounded claim process, we have deleted those sentences in § 3.159(c)(1)(i) and (ii), (c)(2)(i) and (ii), (c)(3), and (e)(2) because they are unnecessary and state the obvious.

We also proposed that VA will assist claimants by requesting relevant records in the custody of a Federal agency or department. One commenter stressed that VA should limit such requests to only relevant records. The proposed language already contained such a limitation, and we decline to make any changes to the regulatory language that would result in a redundancy. The same commenter suggested that VA should limit the number of requests it makes for Federal records. However, such a suggestion directly contravenes the express language of section 5103A(b)(3), requiring VA to continue to attempt to obtain these records unless it is reasonably certain that they do not exist or until further efforts to obtain them would be futile. Therefore, we have made no change to the proposed rule to limit these efforts to a specific number of attempts. One commenter suggested that VA should define the word ''futile'' by regulation. However, the proposed regulatory language at § 3.159(c)(2) gave examples of circumstances in which VA may conclude that further efforts would be futile and in our view there is no need to further define such circumstances.

One commenter stated that the regulation should contain a ''good faith extension'' of the one-year time period to secure Federal records; however, there is no such one year time period in the VCAA and the inclusion of a good faith exception is unnecessary because VA is obligated to make repeated efforts to secure Federal records, which is tantamount to ''good faith efforts.''

VA's Duty To Notify a Claimant of Its Inability to Obtain Records

When VA is unable to obtain relevant records after making reasonable efforts to do so, section 5103A(b)(2) requires VA to (1) notify the claimant that it is unable to obtain relevant records, (2) identify the records it cannot obtain, (3) briefly explain the efforts it made to obtain them, and (4) describe any further action VA will take with respect to the claim. In the case of requests for non-Federal agency or department records, we proposed in § 3.159(e)(1) that VA would provide the claimant with written or oral notice of its inability to obtain them at the time it makes its final request for them. In the case of requests for non-Federal agency or department records, VA proposed that it would provide oral or written notice after VA is reasonably certain that the records do not exist or that further efforts to try to obtain them would be futile.

We received several comments objecting to the proposal to provide oral notice to claimants when VA is unable to obtain records as proposed in § 3.159(e). Some commenters stated that a message conveyed orally is more subject to misunderstanding by a claimant than a message conveyed by letter, and suggested that claimants prefer contact by letter. However, in VA's 2000 Survey of Veterans' Satisfaction with the VA Compensation and Pension Claims Process, 43.0 percent of respondents who were contacted by phone about their claim indicated they were ''very satisfied '' with the claims process. Only 28.3 percent of the respondents who were not contacted by phone stated that they were ''very satisfied'' with the process. In response to another survey question, 31.8 percent of the respondents stated that they preferred phone contact with VA during the claims process whereas only 15.9 percent stated they preferred mail contact. We believe these data support VA's decision to increase use of the phone to expedite the claims process; not only is it practical, but claimants prefer it. In our experience, phone contacts facilitate cooperation between VA and the claimant and afford claimants the opportunity to ask questions about their claims, including the status of VA's efforts to obtain relevant records. While not all claimants are available by phone during normal business hours, VA has found that when phone communications are successful, claim processing is expedited, benefiting both VA and the claimant. Ultimately, however, the decision on whether to communicate with a claimant by phone, letter, or other means such as e-mail or facsimile is based on the availability of the claimant and the resources of the VA regional office handling the claim. This regulatory language is intended to ensure the flexibility needed for efficient, modern claims processing.

Moreover, nothing in the VCAA precludes oral notice. In fact, the legislative history of the VCAA shows that Congress sought to accommodate VA's plans to expand its options for communicating with claimants beyond the written letter format. The legislative history of the VCAA shows that Congress intentionally removed the words ''in person or in writing'' from former 38 U.S.C. 5102 with respect to the notice VA must give a claimant when the claimant has not submitted a substantially complete application. 146 Cong. Rec. H9913, H9914 (daily ed. Oct 17, 2000) (explanatory statement on H.R. 4864, as amended). The removal of this language was intended to ''permit veterans and VA to use current and future modes of communication.'' Thus, VA's proposal to use oral communication is consistent with congressional intent.

Other commenters objected to the proposal to provide oral notice because they perceived there would be no written documentation of this notice. However, VA does make a record of such oral contacts. VA's case management system uses a Claims Automated Processing System (CAPS), a sophisticated electronic development and notice tracking system. Any written or oral contact with a claimant is documented by date and subject matter of the communication. Alternatively, when appropriate, VA standard procedure requires that oral conversations with a claimant be memorialized in writing, a procedure from which VA has no intention to deviate. *See* Veterans Benefits Administration's Adjudication

Procedures Manual M21–1, Part III, ¶11.17. Therefore we have added a provision to § 3.159(e) to require VA to make a record of any oral notice conveyed to the claimant.

One commenter stated that the regulation should provide that if VA learns that a requested medical record no longer exists, after making reasonable efforts to obtain it, the claimant's lay evidence should be accepted as credible evidence in its place. Because a claimant, if a lay person, is not competent to provide medical evidence, we decline to make the change suggested by this comment.

Medical Examinations and Medical Opinions at VA Expense

Under section 5103A(d)(1), VA must provide a medical examination or obtain a medical opinion in compensation claims ''when such an examination or opinion is necessary to make a decision on the claim.'' Section 5103A(d)(2) provides that an examination or opinion is ''necessary'' if the evidence of record, considering all the information and lay or medical evidence, including statements of the claimant: (1) Contains competent evidence that the claimant has a current disability or persistent or recurrent symptoms of disability; and (2) indicates that the disability or symptoms may be associated with the claimant's military service; but (3) does not contain sufficient medical evidence to decide the claim.

We proposed to implement section 5103A(d)(2) by providing in § 3.159(c)(4)(i) that, in claims for disability compensation, VA would provide an examination or obtain a medical opinion if, after completing its duty to assist a claimant in obtaining records from Federal agency and non-Federal agency sources, the evidence of record does not contain sufficient competent medical evidence to decide the claim, but: (1) Contains competent lay or medical evidence of a current diagnosed disability or of persistent or recurrent symptoms of disability; (2) establishes that the veteran suffered an event, injury or disease in service; and (3) indicates that the claimed disability or symptoms may be associated with the established event, injury or disease in service or another service-connected disability.

Several commenters objected to the similarity between the proposed regulatory criteria for determining when a VA examination or opinion is necessary and the former well-grounded-claim requirements. Although the VCAA eliminated the need to establish a well-grounded claim to be entitled to VA assistance, section 5103A(d)(2) specifies when an examination or medical opinion will be considered necessary. Our regulatory criteria are derived from the corresponding statutory criteria at section 5103A(d)(2). Any similarity between our regulatory criteria and the former well-grounded-claim requirements is due to the similarity between the statutory criteria and the former well-grounded-claim requirements. Therefore, no change was made to the proposed regulatory language based on these comments.

One commenter stated that this regulatory language should expressly state that lay testimony may be considered when determining if a medical examination or medical opinion is necessary to decide the claim. Because the term ''evidence'' in the proposed regulatory language at § 3.159(c)(4) encompasses lay testimony, we decline to make the change suggested by this comment. Another commenter stated that the ''information'' of record should also be considered in determining whether a medical examination or medical opinion was necessary. Accordingly, we have added the term ''information'' to the proposed regulatory language in § 3.159(c)(4)(i) to state, ''A medical examination or medical opinion is necessary if the information or evidence of record does not contain sufficient competent medical evidence to decide the claim.''

Another commenter suggested a change in the proposed regulatory language at § 3.159(c)(4) to state that VA must provide an examination or obtain a medical opinion where the ''evidence is inconclusive to establish service connection.'' However, the language of section 5103A(d)(2)(C) specifies that an examination or medical opinion is necessary when the record does not contain sufficient *medical* evidence. If the evidence lacking to establish service incurrence cannot be supplied by a VA examination or medical opinion, then providing an examination or obtaining an opinion would not benefit the claim. Therefore, no change to the proposed regulatory language was made based on this comment.

Several commenters objected to the proposed language requiring that the evidence of record establish that there was an event, injury or disease in service—the incurrence or aggravation element for service connection. In summary, these commenters felt that this criterion was too burdensome, and that this determination should be postponed until after a VA examination has been provided or a medical opinion obtained. Whether there was an injury or disease in service, or an event leading to injury or disease, is a finding of fact made by the VA decisionmaker. In our view, it is unreasonable to require a claimant to report for an unnecessary VA examination or to ask a medical expert to review the record when the evidence that would result (the examination report or medical opinion) would not be competent evidence of the incurrence or aggravation of a disease or injury in service. In such cases, there is no reasonable possibility that the examination would aid in substantiating the claim because it cannot provide the missing evidence. In the case of medical opinion evidence, for instance, a doctor cannot link a current condition to an injury or disease in service unless that injury or disease is shown to have existed. The evidence on this issue is independent of the VA examination or medical opinion. Therefore, no change has been made to the regulatory language to delete the criterion that the evidence establish an injury or disease in service or an event leading to injury or disease.

One commenter stated that even where there is no evidence of an event, injury or disease in service, a VA examination could establish the incurrence of an injury in some claims. The commenter offered as an example the case of a claim for compensation for a bone or muscle injury, for which a doctor could offer the opinion that a currently diagnosed arthritis is consistent with the veteran's statements describing a fall in service. However, this doctor's opinion would address the nexus, or relationship, between the current disability of arthritis and the claimed injury in service; it would not establish the underlying predicate issue, that is, whether the veteran, in fact, had a fall in service. This same commenter further stated that for disabilities that are presumed under law to have been incurred or aggravated in service based on their manifestation during a specified period after service, a physician's opinion could link the disability to reported symptoms occurring during the presumptive period, thus establishing the existence of the condition within the presumptive period. VA agrees that, under those circumstances, a medical opinion could link the claimed presumptive disability to symptoms shown by other evidence to have occurred during a presumptive period. However, a medical opinion given after the presumptive period could not itself establish the presence of symptoms in the presumptive period. Section 3.307(c) ''Prohibition of certain presumptions'' prevents VA from

accepting a physician's opinion that a presumptive condition was present and manifest to a compensable degree during an applicable presumptive period based merely on the advanced stage of the current disability without other evidence of the condition during service or the presumptive period. Therefore, there would be no use in providing an examination or obtaining an opinion in the absence of any evidence of symptoms during the presumptive period.

Another commenter stated that the Supplementary Information accompanying the proposed rule assumed that only contemporaneous records such as service medical records could establish an in-service incurrence of a disability, in disregard of the evidentiary value of lay testimony. We have revised the proposed regulatory language to clarify that lay evidence can also be considered in establishing that an event, injury or disease occurred in service. Under § 3.159(c)(4), VA will review the ''information and lay and medical evidence of record'' to determine if an examination or medical opinion is necessary to decide the claim.

One commenter stated that in claims for secondary service connection, (for a disability caused or aggravated by a service-connected condition), where the primary condition is a presumptive one, there will be no evidence of an ''event, injury or disease'' in service that will meet the regulatory requirement. Since the proposed regulatory language specifically provided for examinations or medical opinions for secondary service connection conditions in § 3.159(c)(4)(i)(C), we have made no change based on this comment.

We received several comments on the requirement that the evidence of record ''indicate[ ]'' that the claimed disability or symptoms ''may be associated'' with service. Notably, neither Congress nor VA in its proposed rule, required either competent evidence or medical evidence of such an association as a prerequisite to a VA examination or medical opinion. VA proposed to require only an indication by the evidence of record. Nonetheless, some commenters misconstrued the proposed language to require more. Other commenters expressed the opinion that this regulatory language would require that the veteran ''establish'' that an in-service event caused his or her current disability. However, neither the proposed regulatory language nor the Supplementary Information stated that the claimant must provide such evidence. In our view, the VCAA's term, ''indicates,'' is a clear signal of Congress' intent that the evidentiary record need not definitively establish such an association or ''nexus'' between current disability and service; rather, the mere indication of such a possible association based on all the information and evidence of record would dictate the necessity of a VA medical examination or opinion to clarify this evidentiary point. Because the regulatory language proposed is consistent with this interpretation, we made no change to the regulation based on these comments.

In § 3.159(c)(4)(ii), we stated circumstances in which such an association with service may be shown, including continuity of symptoms after discharge from service, post-service treatment for a condition, or other possible association with service. Two commenters stated that the examples should not include ''evidence showing continuity of symptoms of a disability since the veteran's release from active duty'' because it is unnecessary in light of the continuity provisions of § 3.303(b). We agree, and have deleted this language from the final rule.

Another commenter stated that symptoms of a presumptive condition occurring during a presumptive period should satisfy the statutory criteria that the evidence show that the current condition ''may be associated'' with service. We agree that evidence of symptoms of a presumptive condition manifested to a compensable degree during a presumptive period would be evidence that a claimed presumptive condition may be associated with service. In such cases, a VA examination may be necessary to determine the degree of disability caused by the presumptive condition. When the record shows evidence of symptoms of a condition that may or may not be a presumptive one during an applicable presumptive period, a VA medical examination or medical opinion would be necessary because the medical evidence is insufficient to determine if the symptoms are consistent with the currently diagnosed condition.

We have revised the regulatory language at § 3.159(c)(4)(i)(B) to state that VA will consider a medical examination or opinion necessary when the evidence of record does not contain sufficient competent medical evidence to decide the claim, but contains competent lay or medical evidence of a current diagnosed disability or persistent or recurrent symptoms of disability, and establishes that the veteran suffered an event, injury or disease in service, or has a disease or symptoms of a disease manifested during an applicable presumptive period.

Finally, one commenter stated that the regulation should expressly state that a medical examination is not necessary when sufficient medical evidence has been submitted to decide the claim. We have made no change to the regulation based on this comment. The regulation states circumstances in which VA will be required to provide a VA medical examination or obtain a medical opinion. VA may certainly schedule examinations in circumstances other than those set forth in this regulation; section 5103(g) states that VA may provide more assistance than required by statute. This regulation sets the floor, not the ceiling for VA assistance in providing medical examinations or obtaining medical opinions.

Circumstances Where VA Will Refrain From or Discontinue Providing Assistance

Section 5103A(a)(2) states that VA has no duty to assist a claimant if or when there is no reasonable possibility that VA assistance would help substantiate the claim. We proposed to implement that statutory provision in § 3.159(d) by stating that VA will refrain from or discontinue providing assistance when there is no reasonable possibility that its assistance would substantiate a claim. We proposed three examples of circumstances in which VA will refrain from providing assistance: (1) When a claimant applies for a benefit for which he or she is not legally eligible; (2) when a claimant asserts a claim that is inherently incredible or clearly lacks merit; and (3) when a claimant claims a benefit to which the claimant is not entitled as a matter of law. In some cases, VA's determination that there is no reasonable possibility of VA assistance substantiating the claim may be made on the face of a substantially complete application. In other cases, the futility of further assistance may not become apparent until some assistance has been given. Therefore, we proposed that VA will ''discontinue'' assistance when the evidence obtained indicates that there is no reasonable possibility that further assistance would substantiate the claim.

One commenter stated that there is no reason to define the statutory phrase, ''no reasonable possibility.'' We disagree. The term is subject to varying interpretations, and it benefits both the claimant and VA if VA defines the term and sets a standard.

One commenter objected to the first circumstance described, stating that it should be VA's duty to help the

claimant establish legal eligibility for a benefit if eligibility is not clear on the face of the application. As noted previously, we have amended the definition of a ''substantially complete application'' to indicate that it contains enough information for VA to verify service and character of discharge, which VA would need to determine eligibility. However, no amount of VA assistance can provide eligibility for a benefit to a claimant who is in fact ineligible. Therefore, we retain our proposed rule that VA will refrain from assisting to obtain evidence if the information on a substantially complete application indicates no reasonable possibility that VA assistance will substantiate the claim because the claimant is not legally eligible for the benefit.

We also received comments to the proposed second circumstance, that is, when a claim is inherently incredible or clearly lacks merit. Some commenters felt that VA would use this provision as a pretext to refuse assistance for potentially meritorious claims. VA will not do that. Some commenters stated that certain mentally disabled claimants might assert claims that would seem ''inherently incredible'' when in actuality these assertions may be manifestations of their mental illness. The VCAA requires VA to notify a claimant of the information and evidence necessary to substantiate a claim in all claims for which a substantially complete application has been submitted, regardless of whether VA is going to assist in obtaining evidence. If a VA decisionmaker determines that a claim is inherently incredible, the decisionmaker can request that the claimant submit information or evidence as provided by section 5103(a) and § 3.159(b)(1) that would lead VA to conclude that it should provide assistance to substantiate the claim. Moreover, the proposed rule would not preclude a claimant from submitting information and evidence that might lead VA to change its determination that there is no reasonable possibility that VA assistance will help substantiate the claim.

Other commenters felt that ''clearly lacks merit'' was too vague a term to be of useful guidance for either VA or a claimant. Others stated objections to the term ''inherently incredible.'' We have retained both terms in the final rule because they are not mutually exclusive and cover different circumstances. It may not be clear that a claim clearly lacks merit until VA has requested and received records relevant to the claim, whereas it may be appropriate to conclude that a claim is inherently incredible on its face based merely on the facts asserted in the claim or after certain development. On this same issue, one service organization commented that we should consider a standard by which VA would provide assistance, ''unless it can affirmatively determine that a medical expert could not find any association under current medical or scientific knowledge.'' As a substitute for ''inherently incredible'' claims, we find merit in this suggestion, but believe that the standard, as phrased, may be construed to permit the VA adjudicator to apply his or her own unsubstantiated medical opinion. Because this is contrary to long-standing veterans' law principles, we have not revised the final regulatory language based on this comment.

One commenter stated that the third circumstance, ''no entitlement under the law'' should be deleted, asserting that VA may develop such claims and come up with evidence supporting entitlement under a new legal theory. We decline to make the change in the proposed regulatory language as suggested because this circumstance encompasses claims for which there is no legal entitlement under any theory, such as claims for compensation for a congenital or developmental condition.

Reopened Claims and New and Material Evidence

The VCAA states that nothing in section 5103A ''shall be construed to require the Secretary to reopen a claim that has been disallowed except when new and material evidence is presented or secured.'' On the other hand, section 5103(g) provides that nothing in section 5103A precludes VA from providing such other assistance as the Secretary considers appropriate. Accordingly, we proposed to provide limited assistance to claimants trying to reopen finally decided claims.

VA proposed that it would request any existing records from Federal agencies or non-Federal agency sources, if reasonably identified by the claimant, in order to assist the claimant to reopen his or her claim. In our view, such assistance is appropriate because it could be accomplished with minimal effort and expense, although it would be a change from pre-VCAA procedures. These procedures arose from case law that required a claimant to first submit new and material evidence sufficient to reopen a claim before VA could assist in developing additional evidence to substantiate it.

Given section 5103A(f)'s express preservation of the finality of VA decisions, we proposed, however, to provide less assistance in attempts to reopen final previously disallowed claims than for original claims for compensation. We proposed that VA would not provide an examination or obtain a medical opinion to create new evidence that may or may not be material, given the substantial time, effort and expense involved in the VA examination and medical opinion process. Some commenters objected to this proposal on the grounds that it would disadvantage persons whose previous claims were denied not on the merits but on the basis that they were not well grounded, because many of these claimants may not have had their claims fully developed. However, claimants whose prior claims were denied as not well grounded would not be disadvantaged, since a claim that was previously denied as not well grounded should be easy to reopen compared to a claim denied on the merits. If a claim was denied as not well grounded, it was denied because of a lack of evidence relating to a fact necessary to establish a claim. For example, a claim may have been denied as not well grounded because there was no competent evidence that a veteran has a current disability. If there were any competent evidence that the veteran did have a current disability, that evidence would constitute new and material evidence, which would reopen the claim.

Some commenters stated that VA should also provide a VA examination or medical opinion to develop evidence to reopen a claim. This regulation presumes that a claim that was finally decided on the merits had been fully developed by VA, including a VA examination or medical opinion where necessary, because under the provisions of prior section 5107(a), VA had a duty to assist a claimant who filed a well-grounded claim. In our view, it is more than fair that VA impose some limit on the expenditure of its finite resources in subsequent efforts to assist a claimant substantiate a claim after it has once made reasonable efforts to assist and the evidence failed to substantiate the claim. Nevertheless, we have revised the proposed language of § 3.159(c)(4)(iii) to clarify that VA will consider providing an examination or obtaining a medical opinion only if new and material evidence is already presented or secured.

We also proposed to change the definition of ''new and material evidence'' in conjunction with VA's proposal in § 3.159 to define what actions it will take to assist a claimant in submitting evidence to reopen a finally denied claim. Several commenters objected to the proposed

change in definition on the grounds that the VCAA did not address this issue. However, in our view, it is helpful for the claimant to understand the nature of the evidence that will reopen a claim, in light of the fact that it will now be easier for a claimant to reopen a claim because, unlike before, the claimant now will have VA assistance in obtaining evidence that is potentially new and material. Therefore, we have not withdrawn the proposed revision to § 3.156 based on these comments.

We proposed to redefine ''material'' evidence to mean ''existing evidence that relates specifically to the reason why the claim was last denied.'' Many commenters felt this language was too restrictive. We agree, and therefore have revised the final regulatory language at § 3.156(a) in a manner that more accurately conveys the meaning intended, to state that ''Material evidence means existing evidence that . . . relates to an unestablished fact necessary to substantiate the claim.''

One commenter objected to the proposed definition because it did not provide that VA would review any evidence submitted as new and material ''in connection with evidence previously assembled.'' This commenter stated that this omission may negatively impact claims where all the evidence of record may lead to a different conclusion on the issue of whether new and material evidence had been submitted, than does one piece of evidence in isolation. We agree and have changed the regulatory language to state that ''Material evidence means existing evidence that, by itself or when considered with previous evidence of record, relates to an unestablished fact necessary to substantiate the claim.''

We also proposed that new and material evidence ''must raise a reasonable possibility of substantiating the claim,'' a requirement to which several commenters objected. With respect to other claims for benefits, the VCAA provides that VA assistance is required unless there is no reasonable possibility that this assistance would aid in substantiating the claim. We believe it is fair and reasonable to apply the same standard—that there be a reasonable possibility that VA assistance would help substantiate the claim—in determining whether a claim has been reopened, triggering VA's full duty to assist by providing a VA examination or obtaining a medical opinion. Therefore, we have made no change to the proposed regulatory language based on these comments.

One commenter stated that the regulation should be revised to state specifically that new and material evidence could also be evidence that supports a different legal theory for entitlement. However, VA adjudicators are required to ''grant[] every benefit that can be supported in law,'' under § 3.103(a) which includes considering all possible legal theories of entitlement in deciding a claim. The same standard would apply in considering all legal theories applicable to reopening a claim. Therefore, we have made no change to the regulatory language based on this comment.

Additional Comments and Administrative Procedure Act

One commenter stated that VA should consider extending the comment period for another 30 days. We decline to do so. We are unaware of any comments other than those submitted and reviewed in this document. These comments were extensive and detailed. We have attempted to analyze these comments as quickly as possible to expedite the development of this final rule. As noted in the Supplementary Information accompanying the proposed rule, the United States Court of Appeals for Veterans Claims has concluded that the Secretary's authority to implement the VCAA could be usurped by the court's issuance of decisions as to the applicability of the VCAA, and as a consequence, judicial review of Board of Veterans' Appeals decisions on claims affected by the VCAA is nearing a standstill. Clearly, it is necessary to issue the final rule rather than extend the comment period another 30 days. Further, for these reasons, we have found good cause for not applying the delayed effective date provisions of 5 U.S.C. 553.

Another commenter suggested that we expressly incorporate the ''benefit of the doubt'' rule in § 3.159. However, since § 3.102 already addresses this issue, and is not in conflict with § 3.159, we decline to change the regulation as suggested.

Scope and Applicability

As indicated by the proposal that these regulations be contained in 38 CFR part 3, this final rule applies only to claims for benefits that are governed by part 3. These benefits include compensation, pension, dependency and indemnity compensation, burial benefits, monetary benefits ancillary to those benefits, and special benefits.

These amendments are effective November 9, 2000, except for the amendment to 38 CFR 3.156(b), which is effective August 29, 2001. Except for the amendment to 38 CFR 3.156(a), the second sentence of 38 CFR 3.159(c), and 38 CFR 3.159(c)(4)(iii), the provisions of this rule merely implement the VCAA and do not provide any rights other than those provided by the VCAA. Therefore, we will apply those provisions to any claim for benefits received by VA on or after November 9, 2000, the VCAA's enactment date, as well as to any claim filed before that date but not decided by VA as of that date.

The second sentence of § 3.159(c) and § 3.159(c)(4)(iii), which relate to the assistance VA will provide to a claimant trying to reopen a finally decided claim, provide rights in addition to those provided by the VCAA. Authority to provide such additional assistance is provided by 38 U.S.C. 5103A(g), which provides that nothing in section 5103A shall be construed to preclude VA from providing such other assistance to a claimant in substantiating a claim as VA considers appropriate. Because we have no authority to make these provisions retroactively effective, they are applicable on the date of this final rule's publication. Accordingly, we will apply the second sentence of § 3.159(c), § 3.159(c)(4)(iii), and the amendment to 38 CFR 3.156(a), to any claim for benefits received by VA on or after August 29, 2001. We note that any future exercises by the Secretary of the discretionary authority granted by 38 U.S.C. 5103A(g) will be accomplished through rules published in accordance with Administrative Procedure Act rulemaking procedures.

Unfunded Mandates

The Unfunded Mandates Reform Act requires (in section 202) that agencies prepare an assessment of anticipated costs and benefits before developing any rule that may result in expenditure by State, local, or tribal governments, in the aggregate, or by the private sector, of $100 million or more in any given year. This amendment will have no consequential effect on State, local, or tribal governments.

Executive Order 12866

This final rule has been reviewed by the Office of Management and Budget under Executive Order 12866.

Paperwork Reduction Act

All collections of information under the Paperwork Reduction Act (44 U.S.C. 3501–3520) referenced in this final rule have existing OMB approval as forms. No changes are made in this final rule to those collections of information.

Regulatory Flexibility Act

The Secretary hereby certifies that the adoption of these amendments will not have a significant economic impact on a substantial number of small entities as

they are defined in the Regulatory Flexibility Act, 5 U.S.C. 601–612. This action would not directly affect any small entities. Only individuals could be directly affected. Therefore, pursuant to 5 U.S.C. 605(b), these amendments are exempt from the initial and final regulatory flexibility analysis requirements of sections 603 and 604.

The Catalog of Federal Domestic Assistance program numbers are 64.100, 64.101, 64.104, 64.105, 64.106, 64.109, and 64.110.

List of Subjects in 38 CFR Part 3

Administrative practice and procedure, Claims, Disability benefits, Health care, Pensions, Veterans, Vietnam.

Approved: July 30, 2001.

Anthony J. Principi,

Secretary of Veterans Affairs.

For the reasons set forth in the preamble, 38 CFR part 3 is amended as follows:

PART 3—ADJUDICATION

Subpart A—Pension, Compensation, and Dependency and Indemnity Compensation

1. The authority citation for part 3, subpart A continues to read as follows:

Authority: 38 U.S.C. 501(a), unless otherwise noted.

§ 3.102 [Amended]

2. In § 3.102, the fifth sentence is amended by removing ''evidence; the claimant is required to submit evidence sufficient to justify a belief in a fair and impartial mind that the claim is well grounded.'' and adding, in its place, ''evidence.''.

3. Section 3.156(a) and its authority citation are revised to read as follows:

§ 3.156 New and material evidence.

(a) A claimant may reopen a finally adjudicated claim by submitting new and material evidence. New evidence means existing evidence not previously submitted to agency decisionmakers. Material evidence means existing evidence that, by itself or when considered with previous evidence of record, relates to an unestablished fact necessary to substantiate the claim. New and material evidence can be neither cumulative nor redundant of the evidence of record at the time of the last prior final denial of the claim sought to be reopened, and must raise a reasonable possibility of substantiating the claim.

(Authority: 38 U.S.C. 501, 5103A(f), 5108)

* * * * *

4. Section 3.159 is revised to read as follows:

§ 3.159 Department of Veterans Affairs assistance in developing claims.

(a) *Definitions.* For purposes of this section, the following definitions apply:

(1) *Competent medical evidence* means evidence provided by a person who is qualified through education, training, or experience to offer medical diagnoses, statements, or opinions. Competent medical evidence may also mean statements conveying sound medical principles found in medical treatises. It would also include statements contained in authoritative writings such as medical and scientific articles and research reports or analyses.

(2) *Competent lay evidence* means any evidence not requiring that the proponent have specialized education, training, or experience. Lay evidence is competent if it is provided by a person who has knowledge of facts or circumstances and conveys matters that can be observed and described by a lay person.

(3) *Substantially complete application* means an application containing the claimant's name; his or her relationship to the veteran, if applicable; sufficient service information for VA to verify the claimed service, if applicable; the benefit claimed and any medical condition(s) on which it is based; the claimant's signature; and in claims for nonservice-connected disability or death pension and parents' dependency and indemnity compensation, a statement of income.

(4) For purposes of paragraph (c)(4)(i) of this section, *event* means one or more incidents associated with places, types, and circumstances of service giving rise to disability.

(5) *Information* means non-evidentiary facts, such as the claimant's Social Security number or address; the name and military unit of a person who served with the veteran; or the name and address of a medical care provider who may have evidence pertinent to the claim.

(b) *VA's duty to notify claimants of necessary information or evidence.* (1) When VA receives a complete or substantially complete application for benefits, it will notify the claimant of any information and medical or lay evidence that is necessary to substantiate the claim. VA will inform the claimant which information and evidence, if any, that the claimant is to provide to VA and which information and evidence, if any, that VA will attempt to obtain on behalf of the claimant. VA will also request that the claimant provide any evidence in the claimant's possession that pertains to the claim. If VA does not receive the necessary information and evidence requested from the claimant within one year of the date of the notice, VA cannot pay or provide any benefits based on that application. If the claimant has not responded to the request within 30 days, VA may decide the claim prior to the expiration of the one-year period based on all the information and evidence contained in the file, including information and evidence it has obtained on behalf of the claimant and any VA medical examinations or medical opinions. If VA does so, however, and the claimant subsequently provides the information and evidence within one year of the date of the request, VA must readjudicate the claim.

(Authority: 38 U.S.C. 5103)

(2) If VA receives an incomplete application for benefits, it will notify the claimant of the information necessary to complete the application and will defer assistance until the claimant submits this information.

(Authority: 38 U.S.C. 5102(b), 5103A(3))

(c) *VA's duty to assist claimants in obtaining evidence.* Upon receipt of a substantially complete application for benefits, VA will make reasonable efforts to help a claimant obtain evidence necessary to substantiate the claim. In addition, VA will give the assistance described in paragraphs (c)(1), (c)(2), and (c)(3) to an individual attempting to reopen a finally decided claim. VA will not pay any fees charged by a custodian to provide records requested.

(1) *Obtaining records not in the custody of a Federal department or agency.* VA will make reasonable efforts to obtain relevant records not in the custody of a Federal department or agency, to include records from State or local governments, private medical care providers, current or former employers, and other non-Federal governmental sources. Such reasonable efforts will generally consist of an initial request for the records and, if the records are not received, at least one follow-up request. A follow-up request is not required if a response to the initial request indicates that the records sought do not exist or that a follow-up request for the records would be futile. If VA receives information showing that subsequent requests to this or another custodian could result in obtaining the records sought, then reasonable efforts will include an initial request and, if the records are not received, at least one follow-up request to the new source or

an additional request to the original source.

(i) The claimant must cooperate fully with VA's reasonable efforts to obtain relevant records from non-Federal agency or department custodians. The claimant must provide enough information to identify and locate the existing records, including the person, company, agency, or other custodian holding the records; the approximate time frame covered by the records; and, in the case of medical treatment records, the condition for which treatment was provided.

(ii) If necessary, the claimant must authorize the release of existing records in a form acceptable to the person, company, agency, or other custodian holding the records.

(Authority: 38 U.S.C. 5103A(b))

(2) *Obtaining records in the custody of a Federal department or agency.* VA will make as many requests as are necessary to obtain relevant records from a Federal department or agency. These records include but are not limited to military records, including service medical records; medical and other records from VA medical facilities; records from non-VA facilities providing examination or treatment at VA expense; and records from other Federal agencies, such as the Social Security Administration. VA will end its efforts to obtain records from a Federal department or agency only if VA concludes that the records sought do not exist or that further efforts to obtain those records would be futile. Cases in which VA may conclude that no further efforts are required include those in which the Federal department or agency advises VA that the requested records do not exist or the custodian does not have them.

(i) The claimant must cooperate fully with VA's reasonable efforts to obtain relevant records from Federal agency or department custodians. If requested by VA, the claimant must provide enough information to identify and locate the existing records, including the custodian or agency holding the records; the approximate time frame covered by the records; and, in the case of medical treatment records, the condition for which treatment was provided. In the case of records requested to corroborate a claimed stressful event in service, the claimant must provide information sufficient for the records custodian to conduct a search of the corroborative records.

(ii) If necessary, the claimant must authorize the release of existing records in a form acceptable to the custodian or agency holding the records.

(Authority: 38 U.S.C. 5103A(b))

(3) *Obtaining records in compensation claims.* In a claim for disability compensation, VA will make efforts to obtain the claimant's service medical records, if relevant to the claim; other relevant records pertaining to the claimant's active military, naval or air service that are held or maintained by a governmental entity; VA medical records or records of examination or treatment at non-VA facilities authorized by VA; and any other relevant records held by any Federal department or agency. The claimant must provide enough information to identify and locate the existing records including the custodian or agency holding the records; the approximate time frame covered by the records; and, in the case of medical treatment records, the condition for which treatment was provided.

(Authority: 38 U.S.C. 5103A(c))

(4) *Providing medical examinations or obtaining medical opinions.* (i) In a claim for disability compensation, VA will provide a medical examination or obtain a medical opinion based upon a review of the evidence of record if VA determines it is necessary to decide the claim. A medical examination or medical opinion is necessary if the information and evidence of record does not contain sufficient competent medical evidence to decide the claim, but:

(A) Contains competent lay or medical evidence of a current diagnosed disability or persistent or recurrent symptoms of disability;

(B) Establishes that the veteran suffered an event, injury or disease in service, or has a disease or symptoms of a disease listed in § 3.309, § 3.313, § 3.316, and § 3.317 manifesting during an applicable presumptive period provided the claimant has the required service or triggering event to qualify for that presumption; and

(C) Indicates that the claimed disability or symptoms may be associated with the established event, injury, or disease in service or with another service-connected disability.

(ii) Paragraph (4)(i)(C) could be satisfied by competent evidence showing post-service treatment for a condition, or other possible association with military service.

(iii) Paragraph (c)(4) applies to a claim to reopen a finally adjudicated claim only if new and material evidence is presented or secured.

(Authority: 38 U.S.C. 5103A(d))

(d) *Circumstances where VA will refrain from or discontinue providing assistance.* VA will refrain from providing assistance in obtaining evidence for a claim if the substantially complete application for benefits indicates that there is no reasonable possibility that any assistance VA would provide to the claimant would substantiate the claim. VA will discontinue providing assistance in obtaining evidence for a claim if the evidence obtained indicates that there is no reasonable possibility that further assistance would substantiate the claim. Circumstances in which VA will refrain from or discontinue providing assistance in obtaining evidence include, but are not limited to:

(1) The claimant's ineligibility for the benefit sought because of lack of qualifying service, lack of veteran status, or other lack of legal eligibility;

(2) Claims that are inherently incredible or clearly lack merit; and

(3) An application requesting a benefit to which the claimant is not entitled as a matter of law.

(Authority: 38 U.S.C. 5103A(a)(2))

(e) *Duty to notify claimant of inability to obtain records.* (1) If VA makes reasonable efforts to obtain relevant non-Federal records but is unable to obtain them, or after continued efforts to obtain Federal records concludes that it is reasonably certain they do not exist or further efforts to obtain them would be futile, VA will provide the claimant with oral or written notice of that fact. VA will make a record of any oral notice conveyed to the claimant. For non-Federal records requests, VA may provide the notice at the same time it makes its final attempt to obtain the relevant records. In either case, the notice must contain the following information:

(i) The identity of the records VA was unable to obtain;

(ii) An explanation of the efforts VA made to obtain the records;

(iii) A description of any further action VA will take regarding the claim, including, but not limited to, notice that VA will decide the claim based on the evidence of record unless the claimant submits the records VA was unable to obtain; and

(iv) A notice that the claimant is ultimately responsible for providing the evidence.

(2) If VA becomes aware of the existence of relevant records before deciding the claim, VA will notify the claimant of the records and request that the claimant provide a release for the records. If the claimant does not provide any necessary release of the relevant records that VA is unable to obtain, VA

will request that the claimant obtain the records and provide them to VA.

(Authority: 38 U.S.C. 5103A(b)(2))

(f) For the purpose of the notice requirements in paragraphs (b) and (e) of this section, notice to the claimant means notice to the claimant or his or her fiduciary, if any, as well as to his or her representative, if any.

(Authority: 38 U.S.C. 5102(b), 5103(a))

§ 3.326 [Amended]

5. In § 3.326(a), the first sentence is amended by removing ''well-grounded''.

[FR Doc. 01–21802 Filed 8–28–01; 8:45 am]

BILLING CODE 8320–01–P

ENVIRONMENTAL PROTECTION AGENCY

40 CFR Part 52

[TN–232–200118(a); FRL–7044–4]

Approval and Promulgation of Implementation Plans:State of Tennessee

AGENCY: Environmental Protection Agency (EPA).

ACTION: Direct final rule.

SUMMARY: The EPA is approving a revision to the State of Tennessee's rules submitted on February 14, 2000. The State of Tennessee is amending Chapter 1200–3–22—Lead Emissions Standards—to require EPA approval of changes to Reasonably Available Control Technology (RACT) emission limitations in permits for specific lead sources.

DATES: This direct final rule is effective October 29, 2001 without further notice, unless EPA receives adverse comment by September 28, 2001. If adverse comment is received, EPA will publish a timely withdrawal of the direct final rule in the **Federal Register** and inform the public that the rule will not take effect.

ADDRESSES: All comments should be addressed to: Kimberly Bingham at the EPA, Region 4 Air Planning Branch, 61 Forsyth Street, SW., Atlanta, Georgia 30303.

Copies of documents concerning this action are available at the following addresses for inspection during normal business hours:

Environmental Protection Agency, Region 4, Air Planning Branch, 61 Forsyth Street, SW., Atlanta, Georgia 30303–8960.

Tennessee Department of Environment and Conservation, Division of Air Pollution Control, 9th Floor L&C Annex, 401 Church Street, Nashville, Tennessee 37243–1531.

FOR FURTHER INFORMATION CONTACT: Kimberly Bingham, Regulatory Planning Section, Air Planning Branch, Air, Pesticides and Toxics Management Division, Region 4, Environmental Protection Agency, Atlanta Federal Center, 61 Forsyth Street, SW., Atlanta, Georgia 30303. The telephone number is (404) 562–9038. Ms. Bingham can also be reached via electronic mail at bingham.kimberly@epa.gov.

SUPPLEMENTARY INFORMATION:

I. Analysis of State of Submittal

Background

Section 107(d)(5) of the Clean Air Act (CAA) provides for areas to be designated as attainment, nonattainment, or unclassifiable with respect to the lead national ambient air quality standard (NAAQS). States are required to submit recommended designations for areas within their states. When an area is designated nonattainment, the state must prepare and submit a state implementation plan (SIP) pursuant to sections 110(a)(2) and 172(c) of the CAA showing how the area will be brought into attainment. The requirements for all SIPs are contained in section 110(a)(2) of the CAA. Section 172(c) of the CAA specifies the provisions applicable to areas designated as nonattainment for any of the NAAQS. EPA has also issued a General Preamble describing how EPA will review SIPs and SIP revisions submitted under Title I of the Act, including those State submittals containing lead nonattainment area SIP requirements (see generally 57 FR 13498 (April 16, 1992) and 57 FR 18070 (April 28, 1992)).

One of the specific requirements of section 172(c) is that states include in their lead nonattainment SIPs reasonably available control technology (RACT) emission limitations for existing sources. The EPA defines RACT as the lowest emission limitation that a particular source is capable of meeting by the application of control technology that is reasonably available considering technological and economic feasibility. When a state submits a lead nonattainment SIP that includes specific RACT emission limits for specific sources in the lead nonattainment area and these requirements are federally approved by EPA into Tennessee's SIP, any changes to those source-specific RACT emission limits require Tennessee to submit a revision to the SIP to EPA for approval.

Chapter 1200–3–22—Lead Emission Standards

The State of Tennessee had language included in this chapter of their SIP that granted the Tennessee Air Director the ability to change the RACT emission limits for sources specified in the SIP at any given time without prior approval from EPA. Region 4 requested that the State of Tennessee revise their SIP to provide that any changes to the source-specific RACT emissions limits would require EPA approval. In response to this request, the State of Tennessee submitted the following rule revision:

Paragraph (1) of rule 1200–3–22–.03 Specific Emission Standards for Existing Sources of Lead was amended by adding the following language: ''The RACT emission level specified as permit conditions on the operating permit(s) must be submitted, reviewed and approved by the Administrator of the Environmental Protection Agency or his designee.''

II. Final Action

EPA is approving the aforementioned rule revision submitted by the State of Tennessee, because it meets all CAA requirements. The EPA is publishing this rule without a prior proposal because the Agency views this as a noncontroversial submittal and anticipates no adverse comments. However, in the proposed rules section of this **Federal Register** publication, EPA is publishing a separate document that will serve as the proposal to approve the SIP revision if adverse comments are filed. This rule will be effective October 29, 2001 without further notice unless the Agency receives adverse comments by September 28, 2001.

If the EPA receives such comments, then EPA will publish a document withdrawing the final rule and informing the public that the rule will not take effect. All public comments received will then be addressed in a subsequent final rule based on the proposed rule. The EPA will not institute a second comment period. Parties interested in commenting should do so at this time. If no such comments are received, the public is advised that this rule will be effective on October 29, 2001 and no further action will be taken on the proposed rule.

III. Administrative Requirements

Under Executive Order 12866 (58 FR 51735, October 4, 1993), this action is not a significant regulatory action'' and therefore is not subject to review by the Office of Management and Budget. For this reason, this action is also not subject to Executive Order 13211, ''Actions Concerning Regulations That

Significantly Affect Energy Supply, Distribution, or Use'' (66 FR 28355 (May 22, 2001)). This action merely approves state law as meeting federal requirements and imposes no additional requirements beyond those imposed by state law. Accordingly, the Administrator certifies that this rule will not have a significant economic impact on a substantial number of small entities under the Regulatory Flexibility Act (5 U.S.C. 601 *et seq.*).

Because this rule approves pre-existing requirements under state law and does not impose any additional enforceable duty beyond that required by state law, it does not contain any unfunded mandate or significantly or uniquely affect small governments, as described in the Unfunded Mandates Reform Act of 1995 (Public Law 104–4). This rule also does not have a substantial direct effect on one or more Indian tribes, on the relationship between the Federal Government and Indian tribes, or on the distribution of power and responsibilities between the Federal Government and Indian tribes, as specified by Executive Order 13175 (65 FR 67249, November 9, 2000), nor will it have substantial direct effects on the States, on the relationship between the national government and the States, or on the distribution of power and responsibilities among the various levels of government, as specified in Executive Order 13132 (64 FR 43255, August 10, 1999), because it approves a state rule implementing a federal standard, and does not alter the relationship or the distribution of power and responsibilities established in the Clean Air Act. This rule also is not subject to Executive Order 13045 (62 FR 19885, April 23, 1997), because it is not economically significant.

In reviewing SIP submissions, EPA's role is to approve state choices, provided that they meet the criteria of the Clean Air Act. In this context, in the absence of a prior existing requirement for the State to use voluntary consensus standards (VCS), EPA has no authority to disapprove a SIP submission for failure to use VCS. It would thus be inconsistent with applicable law for EPA, when it reviews a SIP submission, to use VCS in place of a SIP submission that otherwise satisfies the provisions of the Clean Air Act. Thus, the requirements of section 12(d) of the National Technology Transfer and Advancement Act of 1995 (15 U.S.C. 272 note) do not apply. As required by section 3 of Executive Order 12988 (61 FR 4729, February 7, 1996), in issuing this rule, EPA has taken the necessary steps to eliminate drafting errors and ambiguity, minimize potential litigation, and provide a clear legal standard for affected conduct. EPA has complied with Executive Order 12630 (53 FR 8859, March 15, 1988) by examining the takings implications of the rule in accordance with the Attorney General's Supplemental Guidelines for the Evaluation of Risk and Avoidance of Unanticipated Takings' issued under the executive order.

The Congressional Review Act, 5 U.S.C. 801 *et seq.*, as added by the Small Business Regulatory Enforcement Fairness Act of 1996, generally provides that before a rule may take effect, the agency promulgating the rule must submit a rule report, which includes a copy of the rule, to each House of the Congress and to the Comptroller General of the United States. EPA will submit a report containing this rule and other required information to the U.S. Senate, the U.S. House of Representatives, and the Comptroller General of the United States prior to publication of the rule in the **Federal Register**. A major rule cannot take effect until 60 days after it is published in the **Federal Register**. This action is not a ''major rule'' as defined by 5 U.S.C. 804(2).

Under section 307(b)(1) of the Clean Air Act, petitions for judicial review of this action must be filed in the United States Court of Appeals for the appropriate circuit by October 29, 2001. Filing a petition for reconsideration by the Administrator of this final rule does not affect the finality of this rule for the purposes of judicial review nor does it extend the time within which a petition for judicial review may be filed, and will not postpone the effectiveness of such rule or action. This action may not be challenged later in proceedings to enforce its requirements. (See section 307(b)(2).)

List of Subjects in 40 CFR Part 52

Environmental protection, Air pollution control, Lead, Intergovernmental relation, Reporting and recordkeeping requirements.

Dated: July 24, 2001.

Russell Wright,

Acting Regional Administrator, Region 4.

Chapter I, title 40, *Code of Federal Regulations,* is amended as follows:

PART 52—[AMENDED]

1. The authority citation for part 52 continues to read as follows:

Authority: 42 U.S.C. 7401 *et seq.*

Subpart RR—Tennessee

2. Section 52.2220(c) is amended by revising the entries for Section 1200–3–22–.03 to read as follows:

§ 52.2220 Identification of plan.

* * * * *

(e) EPA approved regulations.

EPA APPROVED TENNESSEE REGULATIONS

State citation	Title/subject	Adoption date	EPA approval date	Federal Register notice
*	*	*	*	*
Chapter 1200–3–22 Lead Emission Standards				
*	*	*	*	*
Section 1200–3–22–.03	Specific Emission Standards for Existing Sources of Lead.	January 26, 2000	October 29, 2001	66 FR 45633
*	*	*	*	*

[FR Doc. 01–21700 Filed 8–28–01; 8:45 am]

BILLING CODE 6560–50–P

ENVIRONMENTAL PROTECTION AGENCY

40 CFR Part 300

[FRL–7045–2]

National Oil and Hazardous Substance Pollution Contingency Plan; National Priorities List Update

AGENCY: Environmental Protection Agency.

ACTION: Notice of deletion of the Western Pacific Railroad Superfund site from the National Priorities List.

SUMMARY: The Environmental Protection Agency (EPA) Region 9 announces the deletion of the Western Pacific Railroad Site in Oroville, Butte County, California, from the National Priorities List (NPL). The NPL is Appendix B of 40 CFR part 300 which is the National Oil and Hazardous Substances Pollution Contingency Plan (NCP), which EPA promulgated pursuant to Section 105 of the Comprehensive Environmental Response, Compensation, and Liability Act of 1980 (CERCLA), as amended. EPA and the State of California, through the Department of Toxic Substances Control, have determined that the site poses no significant threat to public health or the environment and, therefore, no further remedial measures pursuant to CERCLA are appropriate.

EFFECTIVE DATE: August 29, 2001.

FOR FURTHER INFORMATION CONTACT: Holly Hadlock, Project Manager, U.S. EPA, Region 9, 75 Hawthorne Street, SFD–7–1, San Francisco, CA 94105, (415) 744–2244.

SUPPLEMENTARY INFORMATION: The site to be deleted from the NPL is the Western Pacific Railroad Site, Oroville, Butte County, California.

A Notice of Intent to Delete for this site was published in the **Federal Register** on July 18, 2001 (66 FR 37439). The closing date for comments on the Notice of Intent to Delete was August 17, 2001. No comments were received, therefore, EPA has not prepared a Responsiveness Summary. EPA identifies sites that appear to present a significant risk to public health, welfare, or the environment and it maintains the NPL as the list of those sites. Any site deleted from the NPL remains eligible for Fund-financed remedial actions in the unlikely event that conditions at the site warrant such actions. Section 300.425(e)(3) of the NCP states that Fund-financed actions may be taken at sites deleted from the NPL. Deletion of a site from the NPL does not affect responsible party liability or impede Agency efforts to recover costs associated with response efforts.

List of Subjects in 40 CFR Part 300

Environmental protection, Air pollution control, Chemicals, Hazardous substances, Hazardous waste, Intergovernmental relations, Penalties, Reporting and record keeping requirements, Superfund, Water pollution control, and Water supply.

Dated: August 17, 2001.

Laura Yoshii,

Acting Regional Administrator, Region 9.

For the reasons set out in the preamble, 40 CFR part 300 is amended as follows:

PART 300—[AMENDED]

1. The authority citation for part 300 continues to read as follows:

Authority: 42 U.S.C. 9601–9657; 33 U.S.C. 1321(c)(2); E.O. 12777, 56 FR 54757, 3 CFR, 1991 Comp., p. 351; E.O. 12580, 52 FR 2923, 3 CFR, 1987 Comp., p. 193.

Appendix B—[Amended]

2. Table 1 of Appendix B to part 300 is amended by removing the entry for the ''Western Pacific Railroad Co.'' in Oroville, California.

[FR Doc. 01–21702 Filed 8–28–01; 8:45 am]

BILLING CODE 6560–50–P

DEPARTMENT OF COMMERCE

National Oceanic and Atmospheric Administration

50 CFR Part 660

[Docket No. 010502110–1110–01; I.D. 081601B]

Fisheries Off West Coast States and in the Western Pacific; West Coast Salmon Fisheries; Closure and Inseason Adjustments for the Recreational and Commercial Salmon Seasons from Queets River, WA, to Humbug Mountain, OR

AGENCY: National Marine Fisheries Service (NMFS), National Oceanic and Atmospheric Administration (NOAA), Commerce.

ACTION: Inseason closure, and adjustments to the 2001 annual management measures for the ocean salmon fishery; request for comments.

SUMMARY: NMFS announces the following inseason actions for the ocean salmon fisheries: Closure of the recreational selective fishery for marked hatchery coho in the area from Cape Falcon, OR, to Humbug Mountain, OR, on July 19, 2001, at 2359 hours local time (l.t.); reopening of the recreational fishery for all salmon except coho on July 20, 2001; and modification of the weekly opening period and addition of a limited retention regulation for the commercial fishery from the Queets River, WA, to Cape Falcon, OR, to follow a cycle of 4 days open/3 days closed, and a limit of 65 chinook per open period per boat. These actions are necessary to conform to the 2001 annual management measures for ocean salmon fisheries.

DATES: Closure in the area from Cape Falcon, OR, to Humbug Mountain, OR—effective 2359 hours l.t., July 19, 2001. Reopening in the area from Cape Falcon, OR, to Humbug Mountain, OR—effective 0001 hours l.t., July 20, 2001. Adjustments in the area from Queets River, WA, to Cape Falcon, OR—effective 0001 hours l.t., July 20, 2001. All of the above inseason actions will remain effective until the effective date of the 2002 management measures, as published in the **Federal Register**, or until further inseason actions are announced in the **Federal Register**. Comments will be accepted through September 13, 2001.

ADDRESSES: Submit written comments to Donna Darm, Acting Regional Administrator, Northwest Region, NMFS, NOAA, 7600 Sand Point Way N.E., Bldg. 1, Seattle, WA 98115–0070; fax 206–526–6376; or Rebecca Lent, Regional Administrator, Southwest Region, NMFS, NOAA, 501 W. Ocean Blvd., Suite 4200, Long Beach, CA 90802–4132; fax 562–980–4018. Comments will not be accepted if submitted via e-mail or the Internet. Information relevant to this document is available for public review during business hours at the Office of the Regional Administrator, Northwest Region, NMFS.

FOR FURTHER INFORMATION CONTACT: Christopher Wright, 206–526–6140, Northwest Region, NMFS, NOAA.

SUPPLEMENTARY INFORMATION:

Closure From Cape Falcon to Humbug Mountain, OR

The Northwest Regional Administrator, NMFS (Regional Administrator), determined that the recreational quota of 55,000 marked coho salmon for the area from Cape Falcon to Humbug Mountain had been reached, and closed the fishery for all salmon at midnight on July 19, 2001. Regulations governing the ocean salmon fisheries at 50 CFR 660.409 (a)(1) state

that, when a quota for any salmon species in any portion of the fishery management area is projected by the Regional Administrator to be reached on or by a certain date, NMFS will, by notification issued under 50 CFR 660.411 (a)(2), close the fishery for all salmon species in the portion of the fishery management area to which the quota applies, as of the date the quota is projected to be reached.

In the 2001 annual management measures for ocean salmon fisheries (66 FR 23185, May 8, 2001), NMFS announced that the recreational selective fishery for marked hatchery coho in the area between Cape Falcon to Humbug Mountain, OR, would open on June 22 through the earlier of July 31 or the attainment of a 55,000–marked coho quota; it was also announced that the recreational season for all salmon except coho would reopen the earlier of August 1 or the attainment of the coho quota.

The Oregon Department of Fish and Wildlife (ODFW) reported the landed catch, as of July 18, 2001, was 42,179 marked coho salmon (77 percent of the quota). ODFW considered information related to angler effort and catch rate, and estimated that the remainder of the quota would be taken by July 19, 2001. Therefore, ODFW recommended that NMFS close the area, effective midnight on July 19, 2001. This would allow the recreational fishery for all salmon except coho to reopen July 20, 2001.

Adjustments in the Area From Queets River to Cape Falcon

Based on information received from the Washington Department of Fish and Wildlife (WDFW) and ODFW, the Regional Administrator determined that modification of the weekly opening period for the commercial salmon fishery from the Queets River, WA, to Cape Falcon, OR, was justified to slow the chinook catch rates, to better monitor the fishery, and to avoid an early closure that would limit access to the coho quota. The weekly opening period was modified to implement a cycle of 4 days open/3 days closed and a limited retention regulation of 65 chinook per open period per boat. Modification of fishing seasons is authorized by regulations at 50 CFR 660.409 (b)(1)(i). Modification of the species that may be caught and landed during specific seasons, and the establishment or modification of limited retention regulations, is authorized by regulations at 50 CFR 660.409 (b)(1)(ii).

In the 2001 annual management measures for ocean salmon fisheries (66 FR 23185, May 8, 2001), NMFS announced that the commercial fishery for all salmon in the area from the Queets River, WA, to Cape Falcon, OR, would open the earlier of the day following closure of the U.S.-Canada Border to Leadbetter Pt. July troll fishery or July 28, but not before July 20, through the earliest of September 30 or the overall chinook quota (preseason 6,000–chinook guideline) or a 63,000–marked coho guideline. The fishery was scheduled to run continuously until 75 percent of either guideline was caught, then it would revert to a cycle of 4 days open/3 days closed. The annual measures also indicated that trip limits, gear restrictions, and guidelines may be instituted or adjusted inseason.

The U.S.-Canada Border to Leadbetter Pt. July troll fishery was closed in an inseason action on July 9, 2001, at 2359 hours l.t. (66 FR 38573, July 25, 2001). Therefore, the commercial fishery for all salmon from Queets River to Cape Falcon opened July 20, 2001.

The WDFW and ODFW reported, during a conference call on July 18, 2001, that the catch rate of chinook relative to coho was higher than anticipated based on observations from ongoing fisheries. The states were concerned that the chinook quota for the commercial fishery from Queets River to Cape Falcon was likely to be reached early, leaving a major portion of the coho quota unharvested. The states recommended that the fishery follow a cycle of 4 days open/3 days closed, and that a limit of 65 chinook per open period per boat be implemented effective July 20, 2001, to control and better assess the progress of the fishery and allow for further adjustments if necessary.

The Regional Administrator consulted with representatives of the Pacific Fishery Management Council, WDFW, and ODFW regarding the above inseason actions by conference call. The best available information on July 18, 2001, indicated that the catch/effort data and projections supported the recreational selective fishery closure and the commercial fishery season modifications. The states will manage the fisheries in state waters adjacent to the areas of the exclusive economic zone in accordance with these Federal actions. As provided by the inseason notice procedures of 50 CFR 660.411, actual notice to fishermen of the closure in the area from Cape Falcon to Humbug Mountain, OR, effective 2359 hours l.t., July 19, 2001, and the adjustments in the area from Queets River to Cape Falcon effective 0001 hours l.t., July 20, 2001, were given prior to the effective dates by telephone hotline number 206–526–6667 and 800–662–9825, and by U.S. Coast Guard Notice to Mariners broadcasts on Channel 16 VHF-FM and 2182 kHz.

Because of the need for immediate action to stop the fishery upon achievement of the quota for the area from Cape Falcon to Humbug Mountain, OR, and for the season modifications for the area from Queets River to Cape Falcon, NMFS has determined that good cause exists for this notification to be issued without affording a prior opportunity for public comment because such notification would be unnecessary, impracticable, and contrary to the public interest. Moreover, because of the immediate need to stop a fishery upon achievement of a quota and modify a season because of estimates of effort and catch, the Assistant Administrator for Fisheries, NOAA, finds, for good cause, under 5 U.S.C. 553 (d)(3), that delaying the effectiveness of this rule for 30 days is impracticable and contrary to public interest.

These actions do not apply to other fisheries that may be operating in other areas.

Classification

These actions are authorized by 50 CFR 660.409 and 660.411 and are exempt from review under Executive Order 12866.

Authority: 16 U.S.C. 1801 *et seq.*

Dated: August 23, 2001.

Dean Swanson,

Acting Director, Office of Sustainable Fisheries, National Marine Fisheries Service.

[FR Doc. 01–21858 Filed 8–28–01; 8:45 am]

BILLING CODE 3510–22–S

DEPARTMENT OF COMMERCE

National Oceanic and Atmospheric Administration

50 CFR Part 679

[Docket No. 010112013–1013–01; I.D. 082301D]

Fisheries of the Exclusive Economic Zone Off Alaska; Species in the Rock Sole/Flathead Sole/''Other flatfish'' Fishery Category by Vessels Using Trawl Gear in Bering Sea and Aleutian Islands Management Area

AGENCY: National Marine Fisheries Service (NMFS), National Oceanic and Atmospheric Administration (NOAA), Commerce.

ACTION: Closure.

SUMMARY: NMFS is closing directed fishing for species in the rock sole/flathead sole/''other flatfish'' fishery

category by vessels using trawl gear in the Bering Sea and Aleutian Islands management area (BSAI). This action is necessary to prevent exceeding the 2001 Pacific halibut bycatch allowance specified for the trawl rock sole/flathead sole/''other flatfish'' fishery category.

DATES: Effective 1200 hrs, Alaska local time (A.l.t.), August 24, 2001, through 2400 hrs, A.l.t., December 31, 2001.

FOR FURTHER INFORMATION CONTACT: Mary Furuness, 907–586–7228.

SUPPLEMENTARY INFORMATION: NMFS manages the groundfish fishery in the BSAI exclusive economic zone according to the Fishery Management Plan for the Groundfish Fishery of the Bering Sea and Aleutian Islands Area (FMP) prepared by the North Pacific Fishery Management Council under authority of the Magnuson-Stevens Fishery Conservation and Management Act. Regulations governing fishing by U.S. vessels in accordance with the FMP appear at subpart H of 50 CFR part 600 and 50 CFR part 679.

The 2001 halibut bycatch allowance specified for the BSAI trawl rock sole/flathead sole/''other flatfish'' fishery category, which is defined at § 679.21 (e)(3)(iv)(B)(2), was established by the Final 2001 Harvest Specifications and Associated Management Measures for the Groundfish Fisheries Off Alaska (66 FR 7276, January 22, 2001) as 854 metric tons.

In accordance with § 679.21 (e)(7)(v), the Administrator, Alaska Region, NMFS (Regional Administrator), has determined that the 2001 halibut bycatch allowance specified for the trawl rock sole/flathead sole/''other flatfish'' fishery in the BSAI has been caught. Consequently, the Regional Administrator is closing directed fishing for species in the rock sole/flathead sole/''other flatfish'' fishery category by vessels using trawl gear in the BSAI.

Maximum retainable bycatch amounts may be found in the regulations at § 679.20 (e) and (f).

Classification

This action responds to the best available information recently obtained from the fishery. The Assistant Administrator for Fisheries, NOAA, finds that the need to immediately implement this action to avoid exceeding the halibut bycatch allowance for rock sole/flathead sole/''other flatfish'' fishery category constitutes good cause to waive the requirement to provide prior notice opportunity for public comment pursuant to the authority set forth at 5 U.S.C. 553 (b)(3)(B) and 50 CFR 679.20 (b)(3)(iii)(A), as such procedures would be unnecessary and contrary to the public interest. Similarly, the need to implement these measures in a timely fashion to avoid exceeding the halibut bycatch allowance for rock sole/flathead sole/''other flatfish'' fishery category constitutes good cause to find that the effective date of this action cannot be delayed for 30 days. Accordingly, under 5 U.S.C. 553 (d), a delay in the effective date is hereby waived.

This action is required by 50 CFR 679.21 and is exempt from review under Executive Order 12866.

Authority: 16 U.S.C. 1801 *et seq.*

Dated: August 24, 2001.

Richard W. Surdi,

Acting Director, Office of Sustainable Fisheries, National Marine Fisheries Service.

[FR Doc. 01–21829 Filed 8–24–01; 4:23 pm]

BILLING CODE 3510–22–S

Proposed Rules

Federal Register
Vol. 66, No. 168
Wednesday, August 29, 2001

This section of the FEDERAL REGISTER contains notices to the public of the proposed issuance of rules and regulations. The purpose of these notices is to give interested persons an opportunity to participate in the rule making prior to the adoption of the final rules.

DEPARTMENT OF AGRICULTURE

Animal and Plant Health Inspection Service

7 CFR Part 319

[Docket No. 00–014–1]

RIN 0579–AB18

Phytosanitary Certificates for Imported Fruits and Vegetables

AGENCY: Animal and Plant Health Inspection Service, USDA.

ACTION: Proposed rule.

SUMMARY: We are proposing to amend our regulations to require that a phytosanitary certificate accompany all fruits and vegetables imported into the United States, with certain exceptions. This proposal would include commercial produce imported into the United States as well as fruits and vegetables brought in by travelers. We would exempt fruits and vegetables that are dried, cured, frozen, or processed, as well as fruits and vegetables that travelers and shoppers bring into the United States for personal use through land ports of entry located along the Canadian and Mexican borders. The regulations currently do not require that phytosanitary certificates accompany produce imported into this country, except for certain fruits and vegetables grown in designated foreign regions. We believe this change is necessary to help prevent foreign plant pests from being introduced into and disseminated within the United States. If implemented, this proposal would require changes in the practices of importers and travelers who bring produce into the United States from other countries.

DATES: We invite you to comment on this docket. We will consider all comments that we receive by October 29, 2001.

ADDRESSES: Please send four copies of your comment (an original and three copies) to: Docket No. 00–014–1, Regulatory Analysis and Development, PPD, APHIS, Suite 3C03, 4700 River Road, Unit 118, Riverdale, MD 20737–1238.

Please state that your comment refers to Docket No. 00–014–1.

You may read any comments that we receive on this docket in our reading room. The reading room is located in room 1141 of the USDA South Building, 14th Street and Independence Avenue, SW., Washington, DC. Normal reading room hours are 8 a.m. to 4:30 p.m., Monday through Friday, except holidays. To be sure someone is there to help you, please call (202) 690–2817 before coming.

APHIS documents published in the **Federal Register**, and related information, including the names of organizations and individuals who have commented on APHIS dockets, are available on the Internet at http://www.aphis.usda.gov/ppd/rad/webrepor.html.

FOR FURTHER INFORMATION CONTACT: Mr. Wayne D. Burnett, Senior Import Specialist, PPQ, APHIS, 4700 River Road Unit 140, Riverdale, MD 20737–1236; (301) 734–6799.

SUPPLEMENTARY INFORMATION:

Background

The Plant Protection Act (7 U.S.C. 7701–7772) authorizes the Secretary of Agriculture to prohibit or restrict the importation and entry into the United States of any plants and plant products, including fruits and vegetables, to prevent the introduction of plant pests or noxious weeds into the United States. Under this authority, the Animal and Plant Health Inspection Service (APHIS) administers regulations in ''Subpart—Fruits and Vegetables'' (7 CFR 319.56 through 319.56–8) (referred to below as the regulations) that prohibit or restrict the importation of fruits and vegetables into the United States from various regions of the world to prevent the introduction and dissemination of plant pests. One form of regulatory restriction placed on certain imported fruits and vegetables is that the shipment be accompanied by a phytosanitary certificate.

A phytosanitary certificate is a document issued by a plant protection official of a national government to facilitate the international movement of a plant or plant product. A phytosanitary certificate attests to the phytosanitary status of the plant or plant product, including the plant or plant product's origin, as well as certification that the plant or plant product has been inspected and/or tested, is considered to be free from plant pests of quarantine significance, and is otherwise believed to be eligible for importation into the country of destination pursuant to the phytosanitary laws and regulations of that country. A phytosanitary certificate may include additional declarations containing information required by the importing country and not routinely noted on the certificate.

The form, content and use of phytosanitary certificates is governed by the International Plant Protection Convention (IPPC). The IPPC is a multilateral treaty under the auspices of the Food and Agriculture Organization of the United Nations (FAO) and is administered through the IPPC Secretariat located in FAO's Plant Protection Service. The IPPC is recognized by the World Trade Organization in the Agreement on the Application of Sanitary and Phytosanitary Measures as the source for international standards for phytosanitary measures affecting trade. Over 100 governments, including the United States, are contracting parties to the IPPC.

The use of phytosanitary certificates in conjunction with the shipment of agricultural and other plant material is the approach that regulatory officials around the world are increasingly relying on to help reduce the introduction and spread of plant pests. Phytosanitary certificates are recognized as an internationally accepted form of pest risk mitigation. Pest risk mitigation at the place of origin is often viewed as the most viable means of preventing the introduction of plant pests. Our trading partners and the IPPC have also recognized that the responsibility of pest risk mitigation and quarantine compliance can be shifted to the exporting country.

Phytosanitary certificates are in wide use in international trade. APHIS issues hundreds of thousands of phytosanitary certificates each year to facilitate the export of U.S. agricultural products to countries that require certificates to accompany such products. We also require that a number of agricultural products imported into the United States be accompanied by a

phytosanitary certificate to ensure freedom from certain plant pests. Articles that must have a phytosanitary certificate to be imported into the United States include citrus from South Africa (§ 319.56–2q); papayas from Brazil and Costa Rica (§ 319.56–2w); cantaloupe, honeydew melons, and watermelon from Brazil and Venezuela (§ 319.56–2aa); tomatoes from Spain, France, Morocco and Western Sahara (§ 319.56–2dd); pears from China (§ 319.56–2ee); Hass avocados from Mexico (§ 319.56–2ff); peppers from Spain (§ 319.56–2gg); and garlic from a number of countries (§ 319.56–2g). Phytosanitary certificates must also accompany nursery stock, plants, roots, bulbs, seeds, and other plant products imported into the United States under 7 CFR 319.37 through 319.37–14.

On August 4, 1995, we published an advance notice of proposed rulemaking (ANPR) in the **Federal Register** (60 FR 39888–39889, Docket No. 95–04601). The ANPR sought comments on whether all fruits and vegetables imported into the United States should be accompanied by a phytosanitary certificate. This included commercial shipments of fruits and vegetables as well as produce brought into the United States by travelers and shoppers. The majority of comments submitted to APHIS in response to the ANPR generally opposed the expanded use of phytosanitary certificates. A number of commenters were particularly concerned that this requirement would cause significant disruptions and delays in commercial shipments of produce from Canada and Mexico. Others contended that the specific pest risk was not adequately demonstrated to justify the uniform, widespread application of this requirement. After considering the comments, we believe it is necessary that we move forward with this proposal, subject to certain exceptions, for the reasons discussed below.

In this document we are proposing to amend the regulations to require that a phytosanitary certificate accompany all fruits and vegetables imported into the United States, with certain exceptions. This proposal would apply to all commercial shipments of fruits and vegetables imported into the United States, as well as to all fruits and vegetables brought in by individual travelers for personal use. We would exempt fruits and vegetables that are dried, cured, frozen, or processed unless we determine that the drying, curing, freezing, or processing to which the fruits or vegetables have been subjected does not entirely eliminate pest risk. We would also exempt fruits and vegetables that travelers and shoppers bring into the United States for personal use through land ports of entry located along the Canadian and Mexican borders.

We define commercial shipment in § 319.56–1 of the regulations as a shipment containing fruits and vegetables that an inspector identifies as having been produced for sale and distribution in mass markets. Identification of a particular shipment as commercial is based on a variety of indicators, including, but not limited to, the quantity of produce, the type of packaging, identification of a grower or packing house on the packaging, and documents consigning the shipment to a wholesaler or retailer.

Requiring fruits and vegetables imported into the United States to be accompanied by a phytosanitary certificate would mean that U.S. importers would have to get the certificate from an official agency of the country where the goods originate. Typically, this would entail an inspection by a plant protection official of the foreign country, certification of where in the country of origin the fruit or vegetables were grown or acquired their phytosanitary status, and a statement that the shipment is free of plant pests of quarantine significance. The certifying country usually charges a fee for these services. Travelers to the United States from foreign countries, unless entering the United States through land border ports, also would be required to obtain a phytosanitary certificate for any fruits or vegetables they wish to bring into the country. This would be true even for travelers bringing fruits and vegetables with them in baggage for personal use.

Because adoption of this proposal would require changes in the practices of importers and travelers who bring produce into the United States, we would conduct an intensive public relations and education campaign to alert importers and travelers to the new requirements. We would also delay the effective date of the rule until at least 6 months after publication of the final rule.

Inspection Role of APHIS

Over the past 200 years, several thousand foreign plant and animal species have become established in the United States. About one in seven has become invasive, leading to economic harm to the United States that runs in the billions of dollars annually. Invasive species are nonindigenous organisms whose introduction can cause economic and environmental harm as well as harm to human health. Problems associated with invasive species are national in scope and are becoming more and more widespread. Once an invasive species establishes itself, it is often difficult and expensive to remove. Recent cases in which invasive species have had a significant effect on fruits and vegetables in the United States include, among others, citrus canker, plum pox virus, and various fruit flies, including the Mediterranean fruit fly (Medfly), Mexican fruit fly, and Oriental fruit fly.

APHIS is one of three primary Federal Inspection Service (FIS) agencies responsible for monitoring the movement of cargo and passengers into the United States. The two other FIS agencies are the U.S. Customs Service (U.S. Customs) in the Department of the Treasury and the Immigration and Naturalization Service (INS) in the Department of Justice. APHIS is the lead Federal agency responsible for preventing the introduction of foreign plant pests and noxious weeds. Plant pests or noxious weeds new to or not known to be widely prevalent in the United States constitute a potential threat to crops and other plants or plant products. It is the job of APHIS to facilitate exports, imports, and interstate commerce in agricultural products and other commodities in ways that will reduce, to the extent practicable, the risk of introducing plant pests or noxious weeds into and within the United States.

At one time, U.S. Customs carried out all primary inspection activity involving the importation of food, plant, and animal articles into the United States. This included initial screening as well as actual inspection of cargo and baggage. APHIS officials were generally called in by U.S. Customs only upon discovery of plant and animal articles.

This allocation of duties has changed in recent years. Beginning in the 1980's, APHIS assumed greater responsibility in conducting the initial screening of cargo and passengers with regard to food, plant, and animal products and now has primary responsibility for carrying out the actual inspection of cargo, as well as baggage, containing or suspected of containing food, plant, and animal articles. We also inspect nonagricultural products that may carry plant pests. In FY 1999, we employed approximately 2,000 inspectors at 126 land, sea, and air ports of entry in carrying out these services, which we refer to as agricultural quarantine inspection (AQI) activities. By comparison, in the early 1980's we employed approximately 1,200 inspectors. Expenditures for AQI activities in FY 2000 totaled approximately $182 million. For the same fiscal year, APHIS received

approximately $26.8 million in appropriations for AQI activities along with $137.5 million in user fees, with remaining revenues coming from other sources such as reimbursable overtime and issuance of phytosanitary certificates.

The detection of plant pests in commercial shipments of fruits and vegetables is usually predicated on inspecting samples of the shipment. APHIS inspectors follow detailed guidelines on selecting a sample representative of the entire shipment. Inspection of pedestrians, travelers, and passenger vehicles follows a two-stage process, primary and secondary inspection. During primary inspection, APHIS inspectors screen passengers, their baggage, and vehicles by questioning the individuals, reviewing their written declaration, and visually observing for possible referral for further examination. We also use x-ray equipment and detector dogs to aid in this process. Secondary inspection involves more detailed questioning of the individual and a visual examination of baggage contents, if necessary. Passenger and baggage inspection tends to require more APHIS staffing and resources in comparison to other AQI activities.

Historically, APHIS has not required all fruits and vegetables imported into the United States to be accompanied by a phytosanitary certificate. We have instead relied largely on having well-trained personnel to inspect imported produce. Port of entry inspection was, and continues to be, the primary safeguard to which all imported produce is subject. However, we are increasingly using other ''offshore'' safeguarding measures for imported fruits and vegetables, such as preclearance inspection in the country of origin, treatments, and phytosanitary certification. These additional measures have become crucial in augmenting inspection efforts in light of worldwide developments and trends involving the movement of goods and people.

Effect of Growth in Trade and Travel

In recent years, opportunities for international commerce and travel have reached unprecedented levels. This has resulted in an explosive growth in both commercial and noncommercial shipments of fruits and vegetables imported into the United States by shippers, travelers, and other individuals. For example, from 1995 to 1999, the value of U.S. agricultural imports increased from $30.6 billion to approximately $38 billion. Fruits and vegetables represent a growing share of this import total as refrigerated containerization and other technological improvements have made it possible to ship perishable commodities longer distances. In 1999, the total value of fruits and vegetables imported into the United States was $4.74 billion. Moreover, the number of international air passengers traveling to the United States has increased over 50 percent during this same period, exceeding 60.8 million passengers in FY 1999.

This growth in trade and travel has not only been with our major trading partners. The movement towards a more globalized marketplace has resulted in increased trade and travel with a number of other countries as well. This has presented us with new challenges in better understanding the pest complexes and potential pest risks associated with goods from these regions.

In response to this growth in international activity, there has been an expansion in the number of U.S. ports of entry. Unfortunately, the number of potential pathways for the movement and introduction of foreign, invasive plant pests has increased with this boom in global trade and travel, placing a tremendous demand on APHIS' inspection services.

Coupled with this unprecedented growth in international commerce and travel, APHIS and other FIS agencies have been directed to carry out their inspection responsibilities in a more timely manner. Recognizing the importance of trade to the national economy, we and our FIS partners have responded by adopting new customer service standards to move the increasing volume of passengers and cargo through ports of entry within specific time periods. For example, current standards call for the agencies to clear international airline passengers within 30 minutes of arrival. Similarly, APHIS has adopted standards to schedule inspections of perishable cargo within 3 hours of being notified of its arrival.

APHIS' record in preventing the introduction and establishment of harmful agricultural invasive species in recent years is noteworthy. Yet, the unprecedented growth in international trade and travel has placed the current system, which relies primarily on inspection at the port of entry, under stress. Studies, reports, and other data have documented how the current AQI system faces a number of challenges in keeping pace with the increasing amount of produce entering this country through commercial channels and by means of individual travelers. For example, a 1993 report by the U.S. Congressional Office of Technology Assessment concluded that policies designed to protect the United States from the introduction of harmful invasive species were not safeguarding our national interests. It further concluded that the current system was unable to keep pace with new pest pathways and introductions. Similarly, a 1997 report by the U.S. Government Accounting Office (GAO) declared that the increasing flow of passengers and cargo is far outdistancing APHIS inspection capabilities despite a 78 percent increase in funding and a 44 percent increase in staffing for AQI activities since 1990. According to the GAO, the APHIS workload has been directly affected by the increase in international trade and travel, both in the volume of cargo and number of international passengers traveling to the United States. Furthermore, increases in the number of ports of entry, as well as the increased risk at existing ports due to expanded volume, have extended APHIS' workload.

Our own AQI monitoring survey and sampling data covering international air passengers arriving in the United States raise similar concerns as to the effect this growth in imported fruits, vegetables, and other agricultural products is having on our inspection efforts. Based on a sample of 149,431 international air passengers arriving in the United States in FY 1999, we found that 12,833 (or 8.6 percent) of these passengers were carrying some type of plant item subject to inspection and possible seizure. Further, we found that 7,451 (5.0 percent) of these passengers carried a plant item that was either prohibited or was subject to seizure because the plant item was infested or the plant item's origin could not be established. To the extent we can generalize, based on this sampling data approximately 5.2 million of the 60.8 million international air travelers arriving in the United States in 1999 would have carried some type of plant item subject to inspection and possible seizure, and that approximately 3.0 million of these passengers carried plant items that would have been prohibited or subject to seizure because the item was infested or the item's origin could not be established. Although we do not maintain data on the types of plant items brought in by air passengers, we know from experience that most of the items would be some form of fruits or vegetables.

An earlier study, an APHIS survey on Medfly exclusion efforts, covered a 12-month period over 1993 and 1994 and involved the inspection of 71,175 passengers out of a total of 14,679,905 passengers arriving at 12 airports, both directly and via hub cities from countries where Medfly existed. Based

on the number of quarantine pests detected during the survey, we estimated that approximately 11,000 quarantine pests were imported by the 14,679,905 passengers. These results probably would have shown even higher pest detections, except that the survey did not include passengers from Asia and Australia or non-Medfly host material and other produce that was not declared.

With respect to commercial shipments, our inspectors must now contend not only with an increased volume of imports, but also with changing transportation modes and technologies. These include increased use of containerized cargo, and transshipments through one or more countries, as well as sharing of vessel container space. These market-driven trends, while resulting in greater transportation efficiencies, can make inspection more problematic, particularly during high-volume periods. Container characteristics that account for productivity gains for industry present challenges for inspectors, since the cargo is not as easily accessible or observable for inspection. Unloading and reloading of the contents is costly, and the threat of invasive plant pest introductions extends more readily beyond the port of entry if the cargo is not unloaded until reaching its final destination. This reverses the historical pattern where species generally first appeared at ports of entry. Since containers are used and reused many times for many different types of cargo, and shipped all over the world, there is also the potential that pests from previous shipments can contaminate the container itself.

Requiring the unloading and reloading of cargo en route for purposes of inspection can be a time consuming and expensive process, while inspecting only the accessible areas of the shipment does not necessarily yield a sample representative of the entire cargo. In fact, in selecting a sample from the tailgate area of a container or truck, we have found that if infested cargo is elsewhere in the container or truck, it will likely not be detected 40 to 60 percent of the time. Phytosanitary certification at the place of origin would help address pest risk concerns while reducing the need for lengthy inspection and the consequent delays and disruptions as containers arrive in the United States for further shipment to their final destination.

In an effort to objectively evaluate and improve our ability to safeguard U.S. resources from invasive species, APHIS recently arranged to have the National Plant Board (NPB) conduct a thorough review of all aspects of our safeguarding system. The review group, composed of State, industry, academia, and environmental groups, conducted extensive research, interviews, site visits, and other interactions with APHIS and its stakeholders. In preparing its evaluation, the review group focused on four major areas: Pest exclusion, responses to pests that breach the exclusion system, use of permits to control the movement of pests, and collection and use of international information. The review group's 1999 report, ''Safeguarding American Plant Resources, A Stakeholder Review of the APHIS-PPQ Safeguarding System'' (Safeguarding Report),[1] contained over 300 recommendations addressing the four major areas of focus.

The Safeguarding Report identifies a number of opportunities to enhance the safeguarding system. In the area of pest exclusion, the Safeguarding Report addresses issues relating to preclearance inspection in the country of origin, smuggling interdiction, handling of commercial cargo, initiatives with regard to the traveling public, port of entry inspection, application of technology, risk analysis, utilization of user fees, and public education and awareness, to name just a few. As of April 2001, a number of recommendations contained in the Safeguarding Report have been implemented, including enactment of the Plant Protection Act, increased use of digital imaging for pest identification, and expanded collection of user fees.

The Safeguarding Report strongly recommends that we modify our risk management strategy, which has relied primarily on port of entry inspections as the main line of defense, to also include other alternative measures to exclude invasive species. It specifically urges us to take a more proactive approach towards the prevention and detection of harmful plant pests through greater use of offshore mitigation measures, including the use of phytosanitary certificates, to supplement inspection at the port of entry.

The Safeguarding Report also specifically recommends that we prohibit the importation of unprocessed food and plant products by the traveling public, or, alternatively, require that such items be accompanied by a phytosanitary certificate. Although a total prohibition on these items would ease enforcement and reduce the amount of potential host material moving into the United States, we have opted for a less restrictive measure of allowing the continued importation of produce by the traveling public, subject to the phytosanitary certificate requirement. We believe this proposed course of action should significantly curtail the quantity of produce brought in by travelers and thereby reduce the risk of pest introduction, yet provide those travelers who wish to bring in produce the opportunity to do so by procuring a phytosanitary certificate.

As mentioned earlier, our proposal would provide an exception to the phytosanitary certificate requirement for fruits and vegetables that are dried, cured, frozen, or processed. We would also exempt noncommercial shipments of produce brought into the United States by travelers and shoppers through land ports of entry located along our borders with Canada and Mexico (see discussion under heading, ''Travelers and Shoppers Entering the United States Through Land Border Ports'').

Why Target Commercial Shipments

Commercial shipments of fruits and vegetables imported into the United States have increased significantly over the last decade as shipping technologies and other factors relating to trade have facilitated the importation of larger quantities of perishable items to this country. This trend is likely to continue as the global marketplace becomes more integrated and U.S. consumers come to expect a year-round supply of various varieties of fruits and vegetables.

We have responded to the increased flow of commercial shipments of agricultural goods into this country with additional staffing, resources, and other measures. However, the growth in imports has increased at a faster rate than our ability to inspect using traditional means. The large amount of prohibited material passing through inspection undeclared or undetected persists. It is apparent that the current reliance on inspection at the port of entry is no longer sufficient, by itself, to adequately respond to the new dynamics governing the commercial movement of imported fruits and vegetables into this country. Even with additional staffing and resources, what can be done at the inspection site is limited, particularly if commercial shipments are to be released in a timely manner.

Requiring phytosanitary certificates for commercial shipments of imported fruits and vegetables would help alleviate the workload of APHIS inspectors at the port of entry by providing inspectors with verifiable information as to the place of origin

[1] The Safeguarding Report is available upon written request from the person listed under **FOR FURTHER INFORMATION CONTACT.** It is also available on the Internet at *http://www.aphis.usda.gov/ppq/safeguarding.*

where the goods acquired their true phytosanitary status, i.e., where the goods were exposed to possible infestation or contamination by pests. Normally, this will be the place where the commodity was grown. The phytosanitary certificate would also provide the added security that the shipment has already been inspected by a plant protection official of a national government in the exporting country.

The required use of phytosanitary certificates would also help mitigate inspection concerns relating to container shipments. Containers present challenges for inspectors, since the cargo is often not easily accessible or observable for inspection. Unloading and reloading of the contents for purposes of inspection can be a time consuming and expensive process, while inspecting only the accessible areas of the shipment does not necessarily yield a sample representative of the entire cargo. Phytosanitary certification based on inspection at the place of origin would help address some of these concerns involving the use of containers. It would lessen the potential need for lengthy inspection and the consequent delays and disruptions upon arrival in the United States.

Requiring phytosanitary certificates for commercial shipments of imported fruits and vegetables would also help overcome inspection challenges by accurately identifying the origin of the shipment's contents. This is particularly important when the shipment has moved through more than one country prior to arrival in the United States. It is becoming more common for perishable agricultural products to be shipped from the country where produced to intermediate layover points in other countries (for further handling and storage) before shipment to the country of final destination. While in storage, these goods may be split up, combined with other consignments from other regions, or be repackaged. The laws of the country where the goods are being temporarily stored may allow for commingled shipments to be labeled as originating there so long as a portion of the shipment includes goods produced in that country. Such practices may obscure the true origin of certain contents in the shipment. For example, it may not be readily apparent that a shipment exported from a low-risk pest region includes articles that were produced in a high-risk pest region. Phytosanitary certificates would help alleviate identification issues relating to the goods' origin, since even goods that are in a commingled shipment or repackaged must still be certified as to their place of origin.

Requiring phytosanitary certificates for all commercial shipments of imported fruits and vegetables would be an important step in mitigating the pest risk associated with the increased volume of commercial produce coming into this country. It would help alleviate inspection concerns with respect to cargo shipped in containers as well as identification issues involving the goods' place of origin. Ultimately, phytosanitary certification should expedite the clearance process at the port of entry for commercial shippers, while providing needed additional security against the introduction and dissemination of invasive plant pests into the United States.

Why Target Travelers

Imported produce brought into the United States by travelers poses a risk because:

- The origin of the produce is often difficult to determine;
- There is a greater chance that the produce is grown in backyard gardens with little or no pest control. Historically, decisions to allow importation of produce have been based on an evaluation of the pest risk associated with commercial production, not backyard production;
- Travelers bring noncommercial varieties with unknown susceptibility to pests; and
- The fruits are often ripe or overripe, and, therefore particularly susceptible to infestations.

The required use of phytosanitary certificates would significantly reduce the total amount of fruits and vegetables brought in by travelers arriving by plane or other means of transportation, resulting in far less infested produce being imported. For travelers who do bring in produce accompanied by a phytosanitary certificate, the inspection process at the port of entry would be more efficient as inspection officers could better determine the origin of the produce. There should also be more consistency in identifying products subject to confiscation. Currently, it is often difficult for inspectors to determine the origin of produce when interviewing passengers. This can result in items being seized that should not be, while other items are released that should be seized. If the number of passengers arriving with produce is significantly reduced, then inspection officers currently required on the baggage floor to facilitate entry of products would be free to conduct more cargo sampling and other detection and compliance activities.

We have considered the potential difficulty, particularly in the initial years, of travelers procuring a phytosanitary certificate. For example, phytosanitary certificates are required to include detailed information about where the fruit or vegetable was grown and, in certain cases, where or how it was treated. This kind of information may not be readily available to travelers or shoppers who purchase the products at a market in a foreign country. We have also taken into account that, even if readily available, the cost of obtaining a certificate may outweigh the benefits for those carrying small amounts of produce with them for personal use. However, the inconveniences and hardships to certain travelers would be more than offset by the fact that this requirement would provide a considerable measure of added protection against the introduction of foreign plant pests by travelers.

Travelers and Shoppers Entering the United States Through Land Border Ports

We are proposing to exempt noncommercial shipments of produce brought in by travelers and shoppers entering the United States through land ports along the Mexican and Canadian borders. We believe that the existing system of inspection provides sufficient protection against the introduction of plant pests in produce carried in by individuals through these ports for personal use, and not for sale.

Vehicular and pedestrian traffic in the millions crosses our land borders annually. In FY 2000, approximately 90.9 million vehicles and 51.0 million pedestrians entered the United States through our ports of entry along our southern border with Mexico. We do not maintain similar statistics for vehicles and pedestrians entering the United States from Canada. The high volume of travelers and shoppers crossing our land borders is not a new phenomenon, but has existed for decades now, due in part to the cultural and economic ties that have developed along our borders with Mexico and Canada. It has been a long-standing practice for a number of shoppers and travelers to bring agricultural goods with them when crossing the border. For example, based on a sample of 52,982 vehicles and 31,553 pedestrians entering the United States from Mexico in FY 2000, we found that approximately 7 percent of the vehicles sampled and 8 percent of the pedestrians sampled carried some type of plant article. (This data does not include passengers on buses.) Applying these percentages to the total number of vehicles and pedestrians entering the

United States from Mexico, we estimate that approximately 6.5 million vehicles and 4.1 million pedestrians would have carried some type of plant article. Although we do not maintain data on the types of plant articles brought in by vehicles and pedestrians, we know from experience that most of the plant articles would be fruits or vegetables.

We have found that the pest risk factors discussed earlier with regard to imported produce brought into the United States by international travelers from around the world are not as applicable in the case of shoppers and travelers bringing in produce through our land border ports of entry. Fruits and vegetables that shoppers and travelers carry in through our land ports along the Mexican and Canadian borders tend to be purchased and consumed in the vicinity of the border area. For instance, it is common for U.S. residents living along the Mexican border to purchase produce in Mexico for local consumption in the United States. These groceries are referred to locally as ''mandado.'' The purchase of mandado represents a long-standing tradition and is symbolic of the culturally-blended society and economy that exists along the United States-Mexican border. A somewhat similar situation occurs along the Canadian border, although there is less traffic of this sort from Canada. The purchase and consumption of produce within the general area of the border is not as great a concern since land areas on either side of the border generally share common plant pests, so the risk of introducing new or not widely prevalent plant pests is minimal.

Based on our many years' experience in inspecting vehicle and pedestrian traffic along the Mexican and Canadian borders, we and our FIS partners have become familiar with the long-standing practices of shoppers and travelers bringing in agricultural items. We are also quite knowledgeable in the types and varieties of fruits and vegetables grown in Mexico and Canada. When inspecting plant articles at land ports, we can act with a greater degree of certainty in determining the general origin of the article without the need of certification, such as whether the article was produced near the border area, or in a location in the interior of Mexico or Canada, or somewhere outside Mexico or Canada. We also have greater flexibility in not being subject to the strict time standards that govern inspection of commercial cargo and airport baggage. Therefore, we believe that the existing system of inspection at our land ports provides sufficient protection against the introduction of plant pests in produce carried in by individuals for personal use without the need of requiring phytosanitary certification.

We are proposing that the exemption from phytosanitary certification would apply only to shoppers and travelers entering the United States through our land ports of entry, and would not be extended to travelers arriving in the United States by plane or boat from Mexico or Canada. There are several reasons for doing this. First, there is a greater potential that these air or boat passengers may have also traveled in areas outside of Mexico or Canada. There is also a greater potential that produce brought into the United States by these passengers may be carried to more distant points from the border that do not necessarily share some of the plant pests common in our land areas along the Mexican or Canadian borders.

We would also not extend this exemption from phytosanitary certification to commercial shipments arriving from Mexico and Canada. We believe that phytosanitary certificates are necessary in the case of commercial shipments from Mexico and Canada in order to mitigate the plant pest risks associated with container shipments and to address the practice of commercial shipments moving through more than one country prior to arrival in the United States.

Certification as a Risk Mitigation Tool

Given the likelihood of continued growth in commercial and noncommercial shipments of produce and the imperative to clear commercial cargo and international travelers in a timely, efficient manner, it is difficult to foresee how the current system, which relies primarily on port of entry inspection, can keep pace with the increased flow of imported produce without greater use of offshore mitigation measures to augment existing detection efforts.

The required use of phytosanitary certificates should greatly curtail the quantity of high-risk imports by travelers. For commercial shipments, the phytosanitary certificate would document the origin of each shipment and ensure inspection in the country of origin by a member of the foreign plant protection organization, helping to ensure shipment of clean commodities.

In our view, greater use and reliance on phytosanitary certificates, by both the United States and other countries, is the wave of the future. While port of entry inspection must continue to play an important role, the historic view that this activity can function as the focal point for exclusion must be augmented by greater emphasis on other viable approaches, including detection, compliance, and mitigation of pest risks in the country of origin. A risk management strategy that emphasizes the increased use of phytosanitary certificates and other offshore mitigation measures, along with continued inspection activities at the port of entry should, in the long run, allow for expedited entry of commercial cargo and passengers while providing the necessary level of quarantine security.

Proposed Changes to Part 319

In § 319.56–1, we propose to amend the definition of *commercial shipment* and add definitions for the terms *noncommercial shipment* and *phytosanitary certificate*.

Commercial shipment is defined in the regulations as ''a shipment containing fruits and vegetables that an inspector identifies as having been produced for sale and distribution in mass markets. Such identification will be based on a variety of indicators, including, but not limited to: quantity of produce, type of packaging, identification of grower or packing house on the packaging, and documents consigning the shipment to a wholesaler or retailer.'' We would amend the definition of *commercial shipment* by revising the phrase ''fruits and vegetables'' in the first sentence to read ''fruits or vegetables.'' We would make this change to be consistent with APHIS inspection policy. We consider a commercial shipment, for purposes of inspection and treatment, to consist of a particular type of fruit or vegetable as opposed to a commingled lot of fruits and vegetables. So if two types of produce enter the United States at the same time as part of a single consignment, we would consider that to be two shipments. We identify commercial shipments on a commodity basis in most circumstances since our regulations for inspection and treatment are based on the pest risks associated with specific fruits or vegetables. In the first sentence, we would also replace the word ''imported'' with the word ''produced.'' While an article may have been ''produced'' for sale in the country of origin, it loses its commercial character if brought to this country by an individual for personal use. Inspectors identify a shipment to be commercial based on whether it is subject to sale and distribution at the time it is ''imported'' into the United States. Also, we would delete the words ''mass markets'' as used in the phrase ''for sale and distribution in mass markets.'' The key factor in identifying a shipment as commercial is whether it

is produced for sale and distribution, and not whether distribution occurs in a mass market.

We would define *noncommercial shipment* as ''a shipment containing fruits or vegetables that an inspector identifies as having been imported for personal use and not for sale.''

We would define *phytosanitary certificate* as ''a document, including electronic versions, that is related to a fruit or vegetable shipment and that: (1) Is patterned after the model certificate of the International Plant Protection Convention (IPPC), a multilateral convention on plant protection under the authority of the Food and Agriculture Organization of the United Nations; (2) is issued by an official of a foreign national plant protection organization; (3) is addressed to the plant protection service of the United States (Animal and Plant Health Inspection Service); (4) describes the shipment; (5) certifies the place of origin for all contents of the shipment; (6) certifies that the shipment has been inspected and/or tested according to appropriate official procedures and is considered to be free from quarantine pests of the United States; and (7) contains any additional declarations required under this subpart.''

We propose to amend the regulations at § 319.56–2(a) by providing that a phytosanitary certificate must accompany all commercial and noncommercial shipments of fruits and vegetables imported into the United States, except for fruits and vegetables that are dried, cured, processed, or frozen, and noncommercial shipments of fruits and vegetables brought into the United States through land ports of entry located along U.S. borders with Canada and Mexico.

We propose to amend paragraphs (b) through (d) of § 319.56–2, which cover the entry of fruits and vegetables under particular situations or from particular countries, to reflect the appropriate application of the new phytosanitary certificate requirement. Under § 319.56–2(b), dried, cured, and processed fruits and vegetables would not require a phytosanitary certificate unless APHIS determines that the drying, curing, or processing to which the fruits or vegetables have been subjected has not eliminated the pest risk. We would amend §§ 319.56–2(c) and (d) to reflect the applicability of the phytosanitary certificate requirement to fruits and vegetables from Canada and to fruits and vegetables imported into the U.S. Virgin Islands from the British Virgin Islands. We would also make a technical correction to § 319.37–2(c), for purposes of syntax and clarity, by substituting the words ''may not be imported'' in place of ''are prohibited importation.'' We would also move the phrase ''in accordance with § 319.37–2 of this part'' to appear earlier in the sentence.

Section 319.56–6 covers inspection and other requirements at the port of first arrival. We propose to amend paragraph (c) of this section to cite APHIS' authority to refuse entry of imported fruits and vegetables if not accompanied by a phytosanitary certificate, when required.

We would leave unchanged those sections of the regulations that already require a phytosanitary certificate to accompany specified fruits and vegetables from particular regions. These sections require specific declarations to appear on the phytosanitary certificates and would remain in effect.

Executive Order 12866 and Regulatory Flexibility Act

This proposed rule has been reviewed under Executive Order 12866. This rule has been determined to be significant for the purposes of Executive Order 12866 and, therefore, has been reviewed by the Office of Management and Budget.

Below is an economic analysis for the proposed rule to require that all fruits and vegetables imported into the United States be accompanied by a phytosanitary certificate, with certain exceptions. The economic analysis provides a cost-benefit analysis as required by Executive Order 12866 and an analysis of the potential economic effects on small entities as required by the Regulatory Flexibility Act.

We do not have enough data for a comprehensive analysis of the economic effects of this proposed rule on small entities. Therefore, in accordance with 5 U.S.C. 603, we have performed an initial regulatory flexibility analysis for this proposed rule. We are inviting comments about this proposed rule as it relates to small entities. In particular, we are interested in determining the number and kind of small entities that may incur benefits or costs from implementation of this proposed rule, including the cost of procuring a phytosanitary certificate from other countries, any other administrative and logistical costs that might be incurred in procuring these certificates, and any costs associated with inspection.

Under the Plant Protection Act (7 U.S.C. 7701–7772), the Secretary of Agriculture is authorized to prohibit or restrict the importation and entry into the United States of any plant and plant products, including fruits and vegetables, to prevent the introduction of plant pests or noxious weeds into the United States.

This proposed rule would require that all fruits and vegetables imported into the United States be accompanied by a phytosanitary certificate, with certain exceptions. We would exempt fruits and vegetables that are dried, cured, frozen, or processed, as well as noncommercial shipments of fruits and vegetables brought into the United States through land ports of entry located along the Canadian and Mexican borders. The United States does not currently require a phytosanitary certificate for the importation of fruits and vegetables, except in specific instances as detailed in the regulations.

This proposed rule has been prompted by the need for offshore pest mitigation measures to augment port of entry inspection efforts in response to the explosive growth in the number of and variety of commercial fruit and vegetable imports coming into this country as well as the increased number of travelers entering the United States from foreign countries. The primary alternative to this proposed rule would be to continue increasing our staffing and resources at port of entry inspection facilities. We could adjust our user fees to help offset any additional costs associated with this effort. APHIS has tried to address the plant pest threat over the past decade through increased staffing at the inspection site. We have also implemented new programs and technologies such as the deployment of detector dogs and the use of x-ray equipment at certain ports. Despite these efforts, however, the large amount of prohibited material passing through port of entry inspection undeclared and undetected persists.

We have also considered the potential benefits of including additional questions on the U.S. Customs form that travelers complete prior to entry into the United States relating to any plant articles they are carrying with them. We have explored this possibility with U.S. Customs since it is their form and is designed primarily to meet the needs of U.S. Customs. However, even if travelers could provide additional information, such as where the article was purchased, in many cases it would not provide us with definitive data as to where and under what conditions the plant article was produced.

It is apparent that even with additional staffing and other measures, what can be done at the inspection site is limited, particularly if cargo and passengers are to be inspected and released in a timely manner. As noted in the 1999 report, ''Safeguarding American Plant Resources, A

Stakeholder Review of the APHIS–PPQ Safeguarding System'' (Safeguarding Report),[2] we must more vigorously pursue offshore mitigation measures that augment our port of entry inspection efforts.

Offshore mitigation has several important advantages. By conducting inspections at the point of origin, pests can be intercepted before they enter the country instead of at U.S. ports. Additionally, inspection at the point of origin is often more efficient and effective as it allows for inspecting cargo before it is packed for shipment rather than having to unpack and repack the shipment for inspection upon arrival at the country of destination. We already require phytosanitary certificates for selected fruits and vegetables exported to the United States from other countries. We are also working with countries seeking to establish preclearance programs for the inspection of a number of commodities. Right now we have APHIS personnel stationed abroad managing permanent preclearance programs for fruits, vegetables, and flower bulbs destined for the United States from Mexico, Chile, and The Netherlands as well as air passenger preclearance programs in Aruba, The Bahamas, Bermuda, and Canada.

We considered requiring phytosanitary certificates only for commercial shipments of fruits or vegetables. We did not propose this alternative because the risks posed by imported fruits and vegetables are not limited to commercial shipments. We also considered prohibiting the importation of unprocessed food and plant products by the traveling public as recommended in the Safeguarding Report. A total prohibition on these items would ease enforcement and reduce the entry of potential host material carrying harmful pests. However, we have opted for a less restrictive measure of allowing the continued importation of produce by the traveling public, with a phytosanitary certificate except as explained below for produce from Mexico and Canada. We recognize that it may be difficult for travelers to obtain a phytosanitary certificate in a number of countries, particularly during the initial years this rule is in effect if it is adopted. However, we expect that, if this proposal is implemented, a number of countries will develop or improve their facilities and services for issuing certificates to travelers and shoppers as is done for commercial importers.

We are exempting from the phytosanitary certificate requirement fruits and vegetables brought into the United States by travelers and shoppers for personal use through land ports of entry along the Canadian and Mexican borders. We believe the continued use of screening and inspection for noncommercial shipments crossing the Canadian and Mexican borders provides a sufficient safeguard.

The growth in the number and variety of commercial shipments as well as the increased number of travelers to the United States has significantly increased the risk of pest introduction. Establishment of foreign plant pests can have a significant economic effect on the United States. Not only do these pests have the potential to cause economic harm to agricultural producers, but subsequent APHIS monitoring and eradication programs can be quite costly.

APHIS programs to control Mediterranean fruit fly (Medfly) and Mexican fruit fly serve as examples in illustrating the potential costs. These particular pests can enter the United States through both commercial cargo shipments and passenger baggage. APHIS studies of the Medfly and Mexican fruit fly have shown the potential for significant economic harm should these pests become established in the United States. A recent APHIS study[3] of the ongoing Texas Valley Mexican Fruit Fly Protocol estimates total costs of between $888 million and $928 million annually if the Mexican fruit fly becomes established throughout its possible range in the United States. These costs take into account additional pest control and treatment for fruit production in California and Florida as well as for projected crop losses. There would also be trade losses due to export prohibitions, as well as quarantine treatment costs, as other countries react to protect themselves from the pest risk associated with the affected produce. The Medfly program in Florida[4] provides a similar example. The total economic effect of Medfly establishment in Florida has been estimated at $308 million annually. This includes costs for pest control and treatment of fruit, as well as projected crop losses.

Both of these existing programs illustrate the potential costs of new foreign plant pests entering and becoming established in this country and represent the types of programs and costs that we hope to be able to avoid in the future, in part through this rule.

This proposed rule would primarily affect two major groups. The first group would be U.S. firms that import fruits and vegetables into the United States. Import brokers who work with these firms would also be affected by the new certification requirements. The second group would be travelers who carry fruits and vegetables into the United States from foreign countries for their own personal use. Based on our initial analysis, it appears that the economic effect of this proposed rule for both U.S. importers and travelers is likely to be small.

In 1999, the total value of fruits and vegetables imported into the United States was $4.74 billion. Most of these imports came from Mexico (40 percent), with the rest from Chile (10.5 percent), Costa Rica (10.1 percent), Canada (8.5 percent) and Ecuador (7 percent). The regulations currently require phytosanitary certification only in specific instances. In 1999, shipments requiring certification accounted for $547.6 million or 11.6 percent of total fruit and vegetable imports. The extent to which phytosanitary certification is required varies from country to country. Of the top five sources of fruits and vegetables listed above, 95.5 percent of Chile's exports to the United States (based on value) require a phytosanitary certificate, whereas only 1 percent of Mexico's exports to the United States require certification.

U.S. Importers

Based on the number of import permits APHIS issues, we expect that between 800 and 1000 firms would be affected by this proposed rule if it is adopted. Requiring a phytosanitary certificate for all commercial shipments of fruits and vegetables imported into the United States would mean that U.S. importers would have to get the certificate from the government of the country where the goods originated. Typically, this would involve an inspection by the foreign government, certification of where in the country of origin the fruits or vegetables were grown, and a statement that the shipment or shipments are free from plant pests of quarantine significance.

Our proposal would represent a significant administrative change for many importers, especially those

[2] The Safeguarding Report is available upon written request from the person listed under **FOR FURTHER INFORMATION CONTACT**. It is also available on the Internet at *http://www.aphis.usda.gov/ppq/safeguarding*.

[3] APHIS, Policy & Program Development, Policy Analysis and Development, ''Economic Analysis of Options for Eradicating Mexican fruit fly (Anastrepha ludens) from the Lower Rio Grande Valley of Texas,'' March, 2000.

[4] APHIS, Policy & Program Development, Policy Analysis and Development, ''Economic Assessment of Options for the Medfly Cooperative Program in Florida,'' February, 1998.

importing from countries from which we do not typically require phytosanitary certificates, such as Canada. The additional paperwork and inspection burden may result in additional costs to importers who find it necessary to restructure their operations to meet the new requirements. We do not expect these costs to be significant.

Foreign national plant protection organizations that issue phytosanitary certificates usually charge a fee for their services. The fee is typically quite small in comparison to the value of the commercial shipment. The value of commercial shipments of fruits and vegetables can vary widely, from a few thousand dollars to over $100,000. The size and value of a shipment will depend on the type of goods, the origin of the goods, the transportation method used, and other factors. The majority of commercial fruit and vegetable shipments appear to range between $5,000 and $20,000 in value, based on data from APHIS and the Census Bureau of the U.S. Department of Commerce. In contrast, the fee that is charged for a phytosanitary certificate and inspection is comparatively small. The actual fee varies from country to country and is based solely on the criteria that the issuing country deems appropriate. As points of reference for most shipments, Canada charges C$17 Canadian dollars ($10.75US) and Mexico charges 244 Mexican new pesos ($24.50US). The structure of the costs upon which the fee is based also varies from country to country. Spain does not charge a fee if a phytosanitary certificate is required by the importing country. If a certificate is not required, Spain charges 0.0525 percent of the customs value of the shipment, with a minimum of 795 pesetas ($4.57US). The Netherlands charges for the time required to conduct the inspection. This includes an initial fee of 48.50 Dutch guilders plus 31.50 Dutch guilders for each 15 minutes. A typical inspection of 15 to 30 minutes would cost between 80 to 111.50 Dutch guilders ($34.72 to $48.39US). APHIS charges $50 for commercial shipments valued at over $1,250.

The cost of obtaining a certificate in comparison to the average value of a commercial fruit and vegetable shipment can be illustrated in the following example involving Canada. The Canadian government charges C$17 for shipments valued above C$1,600, and C$7 for lesser valued shipments. For the higher valued shipments, this would mean a maximum cost of approximately 1 percent of the value of the shipment. For smaller shipments, the certification cost as a percentage of the shipment's value might be higher, but not significantly. For a shipment valued at C$500, the certification cost would be 1.4 percent of the value of the shipment. Since commercial shipments are usually valued much higher than C$1,600, the fee charged for obtaining the certificate would likely be a minor expense. Consequently, based on our initial analysis, this proposed rule would only marginally increase the costs to importers.

A detailed analysis of the cumulative costs of phytosanitary certification in relation to the number of shipments or the value of a shipment is not possible at this time because certain critical information is unavailable, and is to our knowledge not collected. For example, we do not collect data that show the quantitative relationship between the number of shipments entering the United States and the number of phytosanitary certificates issued for those shipments. There may be one or more phytosanitary certificates attached to a single shipment, or conversely, one phytosanitary certificate may apply to several shipments. Without data showing the relationship between shipments and certificates, it becomes difficult to speak in a formal way about the potential added costs due to phytosanitary certification. As such, we are inviting comments that address this issue. However, we have made some estimation of the additional costs of this proposal based on what information we have coupled with our experience in inspecting shipments of fruit and vegetables at land, air, and sea ports of entry. We have strived to be conservative in our estimates so as to not underestimate the cumulative cost.

Our records show that 662,549 commercial shipments of fruits and vegetables entered the United States in 2000. In this specific context, we consider a commercial shipment to consist of a particular type of fruit or vegetable. So, if two types of produce enter the United States at the same time as part of a single consignment, we would consider that to be two shipments. Out of the total of 662,549 commercial shipments in 2000, 77,682 shipments were received at U.S. maritime ports of entry; 99,316 shipments were received at ports of entry located at U.S. airports; and 485,551 shipments were received at U.S. land ports of entry located along the Canadian and Mexican borders. This information covers FY 2000, with the exception of shipments entering U.S. land ports from Canada, which is based on data covering calendar year 2000. Although we do not maintain data on the number of phytosanitary certificates that accompanied these commercial shipments, for purposes of this analysis, we are estimating a 1 to 1 ratio (i.e., one phytosanitary certificate per shipment) for commercial shipments that arrived at our maritime ports, and a 1 to 3 ratio (i.e., one phytosanitary certificate per 3 shipments) in the case of commercial shipments that arrived at our air and land ports. We are estimating a 1 to 1 ratio in the case of maritime cargo because such shipments almost always arrive as one intact load of a particular commodity. We are estimating a 1 to 3 ratio for commercial shipments arriving at our air and land ports since it is quite common for a single consignment of produce arriving by land or air to consist of commingled lots of more than one type of produce, resulting in multiple shipments per consignment. In these situations, one phytosanitary certificate could be issued to cover all of the shipments in the consignment. We are estimating here that one phytosanitary certificate would typically cover 3 commercial shipments that arrive at our air or land ports. We invite you to comment on these estimated ratios.

Based on an 1 to 1 ratio for maritime shipments, we estimate that total maritime shipments of 77,682 in 2000 would have been accompanied by an estimated 77,682 phytosanitary certificates. Using the ratio of 1 to 3 for air and land shipments, the 99,316 shipments arriving by air would have been accompanied by a total of 33,105 phytosanitary certificates, while the 485,551 shipments coming through our land ports would have been accompanied by a total of 161,850 phytosanitary certificates. So we estimate that total fruit and vegetable shipments of 662,549 in 2000 would have required the issuance of 272,637 certificates if this proposed rule were implemented. If we use the cost of a phytosanitary certificate issued by APHIS (i.e., $50), the total cost of requiring phytosanitary certificates for commercial shipments of fruits and vegetables would be approximately $13.6 million (272,637 certificates x $50). Note that this total dollar amount includes the cost of certificates that we already require for certain fruits and vegetables under our regulations. Also, the $50 figure charged by APHIS is generally higher than the fees charged by other countries as discussed above.

In addition to the actual fee for obtaining a phytosanitary certificate, there could be costs associated with the additional time and disruption in having the shipment or shipments inspected and certified in the exporting country. Delays in having the shipments

inspected could result in further costs. We collect no data on these potential costs and are therefore inviting your comments that address this issue.

The other potential area where costs could be incurred is through the added paperwork and administrative burdens associated with finding the appropriate officials in foreign countries to issue the certificates and learning what the appropriate procedures are for each country. There are two main reasons why we do not expect that this will be a major issue for most importing firms.

First, it may be difficult to find the appropriate officials in some countries to conduct the inspections and issue the phytosanitary certificates. However, we are proposing that any final rule would not go into effect until 6 months after publication in the **Federal Register**. This advance notice should give affected parties sufficient time to contact the plant protection agencies in the countries that they are importing from and learn the procedures for procuring a certificate. Furthermore, phytosanitary certificates are governed under the International Plant Protection Convention (IPPC), a multilateral treaty under the auspices of the United Nations Food and Agriculture Secretariat. This treaty has over 100 countries as signatories. Signatories to the IPPC agree that pest risk mitigation is the responsibility of the exporting country, and that they are willing and able to issue phytosanitary certificates. We expect any logistical or administrative difficulties associated with discovering the requirements for obtaining a phytosanitary certificate in specific countries to be short term in most cases, and should be resolved within the 6 month time window before the final rule goes into effect.

The second issue is that many firms use import brokers in order to facilitate the movement of their shipments into the United States. The broker's primary role is to make arrangements and get appropriate documentation for the import and export of goods. Firms that hire brokers will likely be able to avoid the added burden of phytosanitary certification since this task would fall within the purview of the broker. The certification burden as it applies to brokers is less an issue, since this task would fall within the broker's existing role of obtaining necessary documentation in order to expedite the movement of goods on behalf of clients.

Essentially, these new administrative burdens are not expected to have a major impact because there should be sufficient time to adapt to the requirements before they go into effect. In addition, many import firms will continue to rely on a broker to handle these issues for them.

Small Entities

We do not have enough information to fully evaluate the potential effect of this proposed rule on small entities. As such, we are inviting comments addressing this issue. In particular, we are interested in determining the number and kinds of small entities that may incur benefits or costs from implementation of this proposed rule, and if there are any special issues relating to the business practices of these small entities that would make them particularly different from larger firms in their ability to comply with this proposed rule. However, we have made some initial conclusions.

Relevant small entities would include small U.S. wholesalers who import fruits and vegetables from foreign countries. The Small Business Administration defines a small wholesaler of fresh fruits and vegetables as one having less than 100 employees. While smaller firms are likely to import smaller quantities than larger firms, the cost of a phytosanitary certificate likely represents less than 1 percent of the value of a commercially viable shipment, and as such this issue should not constitute a major impact.

Smaller firms would have to deal with the same new administrative burdens as other larger firms. If these smaller firms choose to employ an import broker, then they should be able to avoid any potential problems by relying on the broker. If they choose not to employ a broker, the firm will have to discover the requirements for obtaining a phytosanitary certificate and adjust its procedures accordingly. Smaller firms are likely to import only from a few countries and, thus, will not have to learn the requirements for many countries. Additionally, the 6 month period before the final rule would take effect should allow sufficient time to adjust operations as necessary. We expect any problems that are created in complying with this rule, if implemented, to be short term in nature. As such, based on our initial analysis, the economic effects on these entities should not be significant.

Travelers to the United States From Foreign Countries

Travelers to the United States from foreign countries often bring fruits and vegetables with them in baggage for personal use. Under the proposed rule, travelers would need to obtain a phytosanitary certificate in the country of origin for any fruits and vegetables they bring into the United States for personal use. An exception to this requirement would apply to travelers coming through land ports along the Canadian or Mexican borders.

It would likely be difficult for individual travelers to obtain a phytosanitary certificate in a number of countries, particularly during the initial years this rule is in effect, if it is adopted. Phytosanitary certificates are required to include detailed information about where the fruit or vegetable was grown and where and how it was treated. This kind of information would not likely be readily available to an individual who purchased the produce at a market in a foreign country. Unless a foreign government establishes a special program to facilitate issuance of certificates to the traveling public, most travelers would not know how to obtain a phytosanitary certificate from a foreign government even if they did elect to pay the charge.

The typical fees charged by issuing countries may be prohibitively expensive for travelers. The cost of obtaining a phytosanitary certificate can vary substantially, from no charge to over $50, based on our initial analysis. While these charges would be inconsequential for a commercial shipper, they could be greater than the value of material typically brought in by travelers. APHIS will issue phytosanitary certificates to travelers leaving the United States on request at the noncommercial rate of $23. While a few travelers do make use of this service, it is a fairly rare occurrence as it is typically not worthwhile for travelers.

We have taken into account the possibility that some travelers may consider not obtaining a phytosanitary certificate and attempt to bring in fruits and vegetables without declaring them. However, we believe few people would take this risk. Persons who fail to declare a prohibited item can be fined in addition to having the item confiscated.

In estimating the total cost of this proposed rule on travelers, we know that in FY 1999 approximately 60.8 million international air travelers arrived in the United States, and that approximately 5.2 million (or 8.6 percent) of these air travelers arrived with a plant item. Although we do not maintain data on the types of plant items brought in by air passengers, we know from experience that most of these articles would have been fruits or vegetables. We believe that once the phytosanitary certification requirement is in place, the vast majority of international travelers arriving in the United States would forego bringing in

the typically small amount of fruit and vegetable items for personal consumption since the cost or inconvenience in getting the certificate would not make it worthwhile. For purposes of illustration, assuming 10 percent (or 520,000) of the estimated 5.2 million passengers that brought in a plant item in FY 1999 decided to obtain a phytosanitary certificate, the estimated total cost of certification to these travelers would be approximately $11.9 million. This estimation is based on using the cost for issuing a noncommercial certificate in the United States (i.e., $23), which we believe to be representative of what other countries would charge for this service. Once again, we are inviting your comments that address this issue.

Consequently, this proposed rule would make it more difficult for travelers to carry fruits and vegetables into the United States for personal use. The availability of the required information, as well as the cost, will vary from country to country. In many cases, this proposed rule could prevent individuals from carrying fruits and vegetables with them when traveling to the United States. This could mean a small economic loss to all of these travelers, but we believe most travelers affected will view this change more as an inconvenience, since they may not be able to bring in certain favorite food items.

It is worth noting that there are some countries where it is common for travelers and tourists to bring back specific specialty fruits and vegetables. We do not expect that the proposed rule will have a significant effect on this type of item. In these cases, a market specifically directed at travelers and tourists exists. In order to protect this market, the country exporting the specialty item will likely set up a program to inspect and certify the items for travelers in an efficient and cost effective way. This may be in the form of pre-certified products being sold at airports or some other similar program. This market incentive would lessen the effect of the proposed rule in places where these specialty items exist.

We expect any costs to U.S. importers and travelers to be more than offset by the added safeguarding of U.S. agriculture, the environment, and the economy against the introduction and dissemination of invasive plant pests, which cause economic harm to the United States in the billions of dollars annually. The required use of phytosanitary certificates should greatly reduce the quantity of high-risk baggage imports. It will also provide the additional security of foreign inspection for commercial shipments at the place of origin. We also believe that, in the long run, as use of phytosanitary certification gains further acceptance and credibility, this measure will allow for more expedited entry of commercial cargo and travelers from abroad, while maintaining the necessary level of quarantine security against the introduction and dissemination of invasive pests.

This proposed rule would also entail information collection requirements. These requirements are described in this document under the heading ''Paperwork Reduction Act.''

Executive Order 12988

This proposed rule has been reviewed under Executive Order 12988, Civil Justice Reform. If this proposed rule is adopted: (1) All State and local laws and regulations that are inconsistent with this rule will be preempted; (2) no retroactive effect will be given to this rule; and (3) administrative proceedings will not be required before parties may file suit in court challenging this rule.

Paperwork Reduction Act

In accordance with section 3507(d) of the Paperwork Reduction Act of 1995 (44 U.S.C. 3501 *et seq.*), the information collection or recordkeeping requirements included in this proposed rule have been submitted for approval to the Office of Management and Budget (OMB). Please send written comments to the Office of Information and Regulatory Affairs, OMB, Attention: Desk Officer for APHIS, Washington, DC 20503. Please state that your comments refer to Docket No. 00–014–1. Please send a copy of your comments to: (1) Docket No. 00–014–1, Regulatory Analysis and Development, PPD, APHIS, suite 3C03, 4700 River Road Unit 118, Riverdale, MD 20737–1238, and (2) Clearance Officer, OCIO, USDA, room 404–W, 14th Street and Independence Avenue, SW., Washington, DC 20250. A comment to OMB is best assured of having its full effect if OMB receives it within 30 days of publication of this proposed rule.

We are proposing to amend our regulations to require that a phytosanitary certificate accompany all fruits and vegetables imported into the United States, with certain exceptions.

We are soliciting comments from the public (as well as affected agencies) concerning our proposed information collection and recordkeeping requirements. These comments will help us:

(1) Evaluate whether the proposed information collection is necessary for the proper performance of our agency's functions, including whether the information will have practical utility;

(2) Evaluate the accuracy of our estimate of the burden of the proposed information collection, including the validity of the methodology and assumptions used;

(3) Enhance the quality, utility, and clarity of the information to be collected; and

(4) Minimize the burden of the information collection on those who are to respond (such as through the use of appropriate automated, electronic, mechanical, or other technological collection techniques or other forms of information technology; e.g., permitting electronic submission of responses).

Estimate of burden: Public reporting burden for this collection of information is estimated to average 15 minutes per response.

Respondents: Plant health officials employed by the national governments of countries that export fruits and vegetables to the United States.

Estimated annual number of respondents: 4,000.

Estimated annual number of responses per respondent: 25.

Estimated annual number of responses: 100,000.

Estimated total annual burden on respondents: 25,000 hours.

Copies of this information collection can be obtained from Mrs. Celeste Sickles, APHIS' Information Collection Coordinator, at (301) 734–7477.

List of Subjects in 7 CFR Part 319

Bees, Coffee, Cotton, Fruits, Honey, Imports, Logs, Nursery stock, Plant diseases and pests, Quarantine, Reporting and recordkeeping requirements, Rice, Vegetables.

Accordingly, we propose to amend 7 CFR part 319 as follows:

PART 319—FOREIGN QUARANTINE NOTICES

1. The authority citation for part 319 would continue to read as follows:

Authority: 7 U.S.C. 166, 450, 7711–7714, 7718, 7731, 7732, and 7751–7754; 21 U.S.C. 136 and 136a; 7 CFR 2.22, 2.80, and 371.3.

2. In § 319.56–1, the definition of *commercial shipment* would be revised and new definitions would be added, in alphabetical order, for *noncommercial shipment* and *phytosanitary certificate* to read as follows:

§ 319.56–1 Definitions.

* * * * *

Commercial shipment. A shipment containing fruits or vegetables that an inspector identifies as having been imported for sale and distribution. Such

identification will be based on a variety of indicators, including, but not limited to: Quantity of produce, type of packaging, identification of grower or packing house on the packaging, and documents consigning the shipment to a wholesaler or retailer.

* * * * *

Noncommercial shipment. A shipment containing fruits or vegetables that an inspector identifies as having been imported for personal use and not for sale.

* * * * *

Phytosanitary certificate. A document, including electronic versions, that is related to a fruit or vegetable shipment and that:

(1) Is patterned after the model certificate of the International Plant Protection Convention (IPPC), a multilateral convention on plant protection under the authority of the Food and Agriculture Organization of the United Nations;

(2) Is issued by an official of a foreign national plant protection organization;

(3) Is addressed to the plant protection service of the United States (Animal and Plant Health Inspection Service);

(4) Describes the shipment;

(5) Certifies the place of origin for all contents of the shipment;

(6) Certifies that the shipment has been inspected and/or tested according to appropriate official procedures and is considered to be free from quarantine pests of the United States; and

(7) Contains any additional declarations required under this subpart.

* * * * *

3. In § 319.56–2, paragraphs (a), (b), (c), and (d) would be revised to read as follows:

§ 319.56–2 Restrictions on entry of fruits and vegetables.

(a) To be eligible for entry into the United States:

(1) All fruits and vegetables imported under this subpart, whether commercial or noncommercial shipments, must be free from plants or portions of plants, as defined in § 319.56–1; and

(2) All fruits and vegetables imported under this subpart, whether commercial or noncommercial shipments, must be accompanied by a phytosanitary certificate, except for:

(i) Fruits and vegetables that are dried, cured, or processed as provided in paragraph (b) of this section;

(ii) Frozen fruits and vegetables as provided in § 319.56–2c of this subpart; or

(iii) Noncommercial shipments brought in from Canada or Mexico through land border ports.

(b) Dried, cured, or processed fruits and vegetables (except frozen fruits and vegetables), including cured figs and dates, raisins, nuts, and dried beans and peas, may be imported without permit, phytosanitary certificate, or other compliance with this subpart. However, a permit, a phytosanitary certificate, and other safeguards may be required for any such articles when the Deputy Administrator determines that the drying, curing, or processing to which the fruits or vegetables have been subjected does not entirely eliminate pest risk. Such determination with respect to any such articles will become effective after due notice.

(c) Except as provided in paragraph (a) of this section, fruits and vegetables grown in Canada may be imported into the United States without further restriction under this subpart, *Provided,* that, in accordance with § 319.37–2 of this part, potatoes from Newfoundland and that portion of the Municipality of Central Saanich in the Province of British Columbia east of the West Saanich Road may not be imported into the United States.

(d) Except as provided in paragraph (a) of this section and §§ 319.56–5, 319.56–6, and 319.56–7, fruits and vegetables grown in the British Virgin Islands may be imported into the U.S. Virgin Islands without further permit or restriction other than the authorization contained in this paragraph. However, such fruits and vegetables are exempted from the notice of arrival requirements of § 319.56–5 only when an inspector finds that equivalent information is obtainable from the U.S. Collector of Customs.

* * * * *

4. In § 319.56–6, paragraph (c) would be revised to read as follows:

§ 319.56–6 Inspection and other requirements at the port of first arrival.

* * * * *

(c) *Refusal of entry.* If an inspector finds that an imported fruit or vegetable is prohibited, or is not accompanied by proper documentation such as a phytosanitary certificate, or is so infested with a plant pest that, in the judgment of the inspector, it cannot be cleaned or treated, or contains soil or other prohibited contaminants, the entire lot may be refused entry into the United States.

* * * * *

Done in Washington, DC, this 23rd day of August 2001.

Bill Hawks,

Under Secretary for Marketing and Regulatory Programs.

[FR Doc. 01–21809 Filed 8–28–01; 8:45 am]

BILLING CODE 3410–34–P

DEPARTMENT OF TRANSPORTATION

Federal Aviation Administration

14 CFR Part 39

[Docket No. 2001–CE–01–AD]

RIN 2120–AA64

Airworthiness Directives; SOCATA—Groupe Aerospatiale Models TB 9, TB 10, TB 20, TB 21, and TB 200 Airplanes

AGENCY: Federal Aviation Administration, DOT.

ACTION: Notice of proposed rulemaking (NPRM).

SUMMARY: This document proposes to adopt a new airworthiness directive (AD) that would apply to all SOCATA—Groupe Aerospatiale (SOCATA) Models TB 9, TB 10, TB 20, TB 21, and TB 200 airplanes. The proposed AD would require you to repetitively inspect the lower rudder hinge fitting for cracks. The proposed AD would also require you to repair any crack found in accordance with a repair scheme obtained from the manufacturer through the Federal Aviation Administration (FAA). The proposed AD is the result of mandatory continuing airworthiness information (MCAI) issued by the airworthiness authority for France. The actions specified by the proposed AD are intended to detect and correct fatigue cracks in the lower rudder hinge fitting. This condition could cause the lower rudder to detach from the control linkage with consequent loss of control of the airplane.

DATES: The FAA must receive any comments on this proposed rule on or before September 28, 2001.

ADDRESSES: Submit comments in triplicate to FAA, Central Region, Office of the Regional Counsel, Attention: Rules Docket No. 2001–CE–01–AD, 901 Locust, Room 506, Kansas City, Missouri 64106. Comments may be inspected at this location between 8 a.m. and 4 p.m., Monday through Friday, holidays excepted.

Service information that applies to the proposed AD may be obtained from SOCATA Groupe AEROSPATIALE, Customer Support, Aerodrome Tarbes-Ossun-Lourdes, BP 930—F65009 Tarbes Cedex, France; telephone: (33)

(0)5.62.41.73.00; facsimile: (33) (0)5.62.41.76.54; or the Product Support Manager, SOCATA—Groupe AEROSPATIALE, North Perry Airport, 7501 Pembroke Road, Pembroke Pines, Florida 33023; telephone: (954) 894–1160; facsimile: (954) 964–4191. This information also may be examined at the Rules Docket at the address above.

FOR FURTHER INFORMATION CONTACT: Karl Schletzbaum, Aerospace Engineer, FAA, Small Airplane Directorate, 901 Locust, Room 301, Kansas City, Missouri 64106; telephone: (816) 329–4146; facsimile: (816) 329–4090.

SUPPLEMENTARY INFORMATION:

Comments Invited

How do I comment on the proposed AD? The FAA invites comments on this proposed rule. You may submit whatever written data, views, or arguments you choose. You need to include the rule's docket number and submit your comments in triplicate to the address specified under the caption **ADDRESSES.** The FAA will consider all comments received on or before the closing date. We may amend the proposed rule in light of comments received. Factual information that supports your ideas and suggestions is extremely helpful in evaluating the effectiveness of the proposed AD action and determining whether we need to take additional rulemaking action.

Are there any specific portions of the proposed AD I should pay attention to? The FAA specifically invites comments on the overall regulatory, economic, environmental, and energy aspects of the proposed rule that might suggest a need to modify the rule. You may examine all comments we receive before and after the closing date of the rule in the Rules Docket. We will file a report in the Rules Docket that summarizes each FAA contact with the public that concerns the substantive parts of the proposed AD.

We are re-examining the writing style we currently use in regulatory documents, in response to the Presidential memorandum of June 1, 1998. That memorandum requires federal agencies to communicate more clearly with the public. We are interested in your comments on whether the style of this document is clear, and any other suggestions you might have to improve the clarity of FAA communications that affect you. You can get more information about the Presidential memorandum and the plain language initiative at *http://www.plainlanguage.gov.*

How can I be sure FAA receives my comment? If you want us to acknowledge the receipt of your comments, you must include a self-addressed, stamped postcard. On the postcard, write ''Comments to Docket No. 2001–CE–01–AD.'' We will date stamp and mail the postcard back to you.

Discussion

What events have caused this proposed AD? The Direction Générale de l'Aviation Civile (DGAC), which is the airworthiness authority for France, recently notified FAA that an unsafe condition may exist on all SOCATA Models TB 9, TB 10, TB 20, TB 21, and TB 200 airplanes. The DGAC reports an occurrence of the lower rudder separating from the control linkage on a Model TB 9 airplane. A break in the lower rudder hinge fitting caused this problem and was found during a scheduled inspection on the airplane with more than 6,000 hours time-in-service (TIS). The DGAC reports that material fatigue caused cracks in the lower rudder hinge fitting.

What are the consequences if the condition is not corrected? If this condition is not detected and corrected, the lower rudder could detach from the control linkage with consequent loss of control of the airplane.

Is there service information that applies to this subject? SOCATA has issued Service Bulletin SB 10–114 55, dated September 2000.

What are the provisions of this service bulletin? The service bulletin includes procedures for inspecting the lower rudder hinge fitting for cracks. This document also includes information about where to obtain a repair scheme for a cracked lower rudder hinge fitting.

What action did the DGAC take? The DGAC classified this service bulletin as mandatory and issued French AD Number 2001–002(A), dated January 10, 2001, in order to assure the continued airworthiness of these airplanes in France.

Was this in accordance with the bilateral airworthiness agreement? These airplane models are manufactured in France and are type certificated for operation in the United States under the provisions of §21.29 of the Federal Aviation Regulations (14 CFR 21.29) and the applicable bilateral airworthiness agreement. Pursuant to this bilateral airworthiness agreement, the DGAC has kept FAA informed of the situation described above.

The FAA's Determination and an Explanation of the Provisions of the Proposed AD

What has FAA decided? The FAA has examined the findings of the DGAC; reviewed all available information, including the service information referenced above; and determined that:

—The unsafe condition referenced in this document exists or could develop on other SOCATA Models TB 9, TB 10, TB 20, TB 21, and TB 200 airplanes of the same type design;

—The actions specified in the previously-referenced service information should be accomplished on the affected airplanes; and

—AD action should be taken in order to correct this unsafe condition.

What would the proposed AD require? This proposed AD would require you to repetitively inspect the lower rudder hinge fitting for cracks and repair any crack found in accordance with a repair scheme obtained from the manufacturer through the Federal Aviation Administration (FAA).

Is there a modification I can incorporate instead of repetitively inspecting the lower rudder hinge fitting? The FAA has determined that long-term continued operational safety would be better assured by design changes that remove the source of the problem rather than by repetitive inspections or other special procedures. With this in mind, FAA will continue to work with SOCATA in collecting information and in performing fatigue analysis to determine whether a future design change may be necessary.

Cost Impact

How many airplanes would the proposed AD impact? We estimate that the proposed AD affects 239 airplanes in the U.S. registry.

What would be the cost impact of the proposed AD on owners/operators of the affected airplanes? We estimate the following costs to accomplish the proposed inspection:

Labor cost	Parts cost	Total cost per airplane	Total cost on U.S. operators
3 workhours × $60 per hour = $180	No parts required to perform the inspection	$180	$43,020

The FAA has no method of determining the number of repetitive inspections each owner/operator would incur over the life of each of the affected airplanes so the cost impact is based on the initial inspection.

We estimate the following costs to accomplish any necessary repairs that would be required based on the results of the proposed inspections. We have no way of determining the number of repairs each owner/operator would incur over the life of each of the affected airplanes based on the results of the proposed inspections.

Labor cost	Parts cost	Total cost per Airplane
7 workhours × $60 = $420	$300	$720

Regulatory Impact

Would this proposed AD impact various entities? The regulations proposed herein would not have a substantial direct effect on the States, on the relationship between the national government and the States, or on the distribution of power and responsibilities among the various levels of government. Therefore, it is determined that this proposed rule would not have federalism implications under Executive Order 13132.

Would this proposed AD involve a significant rule or regulatory action? For the reasons discussed above, I certify that this proposed action (1) is not a ''significant regulatory action'' under Executive Order 12866; (2) is not a ''significant rule'' under DOT Regulatory Policies and Procedures (44 FR 11034, February 26, 1979); and (3) if promulgated, will not have a significant economic impact, positive or negative, on a substantial number of small entities under the criteria of the Regulatory Flexibility Act. A copy of the draft regulatory evaluation prepared for this action has been placed in the Rules Docket. A copy of it may be obtained by contacting the Rules Docket at the location provided under the caption **ADDRESSES**.

List of Subjects in 14 CFR Part 39

Air transportation, Aircraft, Aviation safety, Safety.

The Proposed Amendment

Accordingly, under the authority delegated to me by the Administrator, the Federal Aviation Administration proposes to amend part 39 of the Federal Aviation Regulations (14 CFR part 39) as follows:

PART 39—AIRWORTHINESS DIRECTIVES

1. The authority citation for part 39 continues to read as follows:

Authority: 49 U.S.C. 106(g), 40113, 44701.

§ 39.13 [Amended]

2. FAA amends § 39.13 by adding a new airworthiness directive (AD) to read as follows:

SOCATA—Groupe Aerospatiale: Docket No. 2001–CE–01–AD

(a) *What airplanes are affected by this AD?* This AD affects the following TB 9, TB 10, TB 20, TB 21, and TB 200 airplanes, all serial numbers, that are certificated in any category.

(b) *Who must comply with this AD?* Anyone who wishes to operate any of the above airplanes must comply with this AD.

(c) *What problem does this AD address?* The actions specified by this AD are intended to detect and correct fatigue cracks in the lower rudder hinge fitting. This condition could cause the lower rudder to detach from the control linkage with consequent loss of control of the airplane.

(d) *What actions must I accomplish to address this problem?* To address this problem, you must accomplish the following:

Actions	Compliance	Procedures
(1) Visually inspect the lower rudder hinge fitting for cracks.	Upon accumulating 2,000 hours time-in-service (TIS) on the rudder hinge fitting or within the next 100 hours TIS after the effective date of this AD, whichever occurs later, and thereafter at intervals not to exceed 12 calendar months.	In accordance with the ACCOMPLISHMENT INSTRUCTIONS section of SOCATA Service Bulletin SB 10–114 55, dated September 2000, and the applicable aircraft maintenance manual.
(2) If any crack is found during any inspection required in paragraph (d)(1) of this AD, accomplish the following: (i) Obtain a repair scheme from the manufacturer through the FAA at the address specified in paragraph (f) of this AD; and (ii) Incorporate this repair scheme	Prior to further flight after the inspection required in paragraph (d)(1) of this AD.	In accordance with the repair scheme obtained from SOCATA Groupe AEROSPATIALE, Customer Support, Aerodrome Tarbes-Ossun-Lourdes, BP 930—F65009 Tarbes Cedex, France; telephone: (33) 05.62.41.76.68; facsimile: (33) 06.07.32.62.24; or the Product Support Manager, SOCATA—Groupe AEROSPATIALE, North Perry Airport, 7501 Pembroke Road, Pembroke Pines, Florida 33023; telephone: (954) 893–1450. Obtain this repair scheme through the FAA at the address specified in paragraph (f) of this AD.

Actions	Compliance	Procedures
(3) Report any cracks found during the initial inspection required in paragraph (d)(1) of this AD to the FAA with a copy to SOCATA. Information collection requirements contained in this regulation have been approved by the Office of Management and Budget (OMB) under the provisions of the Paperwork Reduction Act of 1980 (44 U.S.C. 3501 *et seq.*) and have been assigned OMB Control Number 2120–0056.	Upon completion of the initial inspection required in paragraph (d)(1) of this AD.	Fill out the compliance form in SOCATA Service Bulletin SB 10–114 55, dated September 2000. Send it to the FAA at the address specified in paragraph (f) of this AD. Send a copy to SOCATA at the address in paragraph (h) of this AD.

(e) *Can I comply with this AD in any other way?* You may use an alternative method of compliance or adjust the compliance time if:

(1) Your alternative method of compliance provides an equivalent level of safety; and

(2) The Manager, Small Airplane Directorate, approves your alternative. Submit your request through an FAA Principal Maintenance Inspector, who may add comments and then send it to the Manager, Small Airplane Directorate.

Note 1: This AD applies to each airplane identified in paragraph (a) of this AD, regardless of whether it has been modified, altered, or repaired in the area subject to the requirements of this AD. For airplanes that have been modified, altered, or repaired so that the performance of the requirements of this AD is affected, the owner/operator must request approval for an alternative method of compliance in accordance with paragraph (e) of this AD. The request should include an assessment of the effect of the modification, alteration, or repair on the unsafe condition addressed by this AD; and, if you have not eliminated the unsafe condition, specific actions you propose to address it.

(f) *Where can I get information about any already-approved alternative methods of compliance?* Contact Karl Schletzbaum, Aerospace Engineer, FAA, Small Airplane Directorate, 901 Locust, Room 301, Kansas City, Missouri 64106; telephone: (816) 329–4146; facsimile: (816) 329–4090.

(g) *What if I need to fly the airplane to another location to comply with this AD?* The FAA can issue a special flight permit under sections 21.197 and 21.199 of the Federal Aviation Regulations (14 CFR 21.197 and 21.199) to operate your airplane to a location where you can accomplish the requirements of this AD.

(h) *How do I get copies of the documents referenced in this AD?* You may obtain copies of the documents referenced in this AD from SOCATA Groupe AEROSPATIALE, Customer Support, Aerodrome Tarbes-Ossun-Lourdes, BP 930—F65009 Tarbes Cedex, France; or the Product Support Manager, SOCATA—Groupe AEROSPATIALE, North Perry Airport, 7501 Pembroke Road, Pembroke Pines, Florida 33023. You may examine these documents at FAA, Central Region, Office of the Regional Counsel, 901 Locust, Room 506, Kansas City, Missouri 64106.

Note 2: The subject of this AD is addressed in French AD Number 2001–002(A), dated January 10, 2001.

Issued in Kansas City, Missouri, on August 22, 2001.

James E. Jackson,

Acting Manager, Small Airplane Directorate, Aircraft Certification Service.

[FR Doc. 01–21754 Filed 8–28–01; 8:45 am]

BILLING CODE 4910–13–P

DEPARTMENT OF TRANSPORTATION

Federal Aviation Administration

14 CFR Part 39

[Docket No. 99–SW–78–AD]

Airworthiness Directives; Eurocopter France Model AS 332C, L, L1, and L2 Helicopters

AGENCY: Federal Aviation Administration, DOT.

ACTION: Supplemental notice of proposed rulemaking (SNPRM); reopening of comment period.

SUMMARY: This SNPRM revises an earlier proposed airworthiness directive (AD) for Eurocopter France (ECF) Model AS 332C, L, L1, and L2 helicopters that would have superseded an existing AD. That AD currently requires conducting a filter clogging warning test, and if necessary, replacing a blocked fuel filter element with an airworthy fuel filter element. The proposed AD would have required the same corrective actions as the existing AD and would have added another fuel filter part number to the applicability. That proposal was prompted by the discovery of blocked fuel filter by-pass valves. This SNPRM revises the proposed rule by: referencing a revision to the previously referenced service information; adding a fuel filter part number to the applicability; and clarifying other provisions throughout the AD. The actions specified by this SNPRM are intended to prevent power loss due to fuel starvation, engine flameouts, and a subsequent forced landing.

DATES: Comments must be received on or before October 29, 2001.

ADDRESSES: Submit comments in triplicate to the Federal Aviation Administration (FAA), Office of the Regional Counsel, Southwest Region, Attention: Rules Docket No. 99–SW–78–AD, 2601 Meacham Blvd., Room 663, Fort Worth, Texas 76137. You may also send comments electronically to the Rules Docket at the following address: *9-asw-adcomments@faa.gov.* Comments may be inspected at the Office of the Regional Counsel between 9 a.m. and 3 p.m., Monday through Friday, except Federal holidays.

The service information referenced in the SNPRM may be obtained from American Eurocopter Corporation, 2701 Forum Drive, Grand Prairie, Texas 75053–4005, telephone (972) 641–3460, fax (972) 641–3527. This information may be examined at the FAA, Office of the Regional Counsel, Southwest Region, 2601 Meacham Blvd., Room 663, Fort Worth, Texas.

FOR FURTHER INFORMATION CONTACT: Paul Madej, Aviation Safety Engineer, FAA, Rotorcraft Directorate, Rotorcraft Standards Staff, Fort Worth, Texas 76193–0110, telephone (817) 222–5125, fax (817) 222–5961.

SUPPLEMENTARY INFORMATION:

Comments Invited

Interested persons are invited to participate in the making of the proposed rule by submitting such written data, views, or arguments as they may desire. Communications should identify the Rules Docket number and be submitted in triplicate to the address specified above. All communications received on or before the closing date for comments, specified above, will be considered before taking action on the proposed rule. The proposals contained in this document may be changed because of the comments received.

Comments are specifically invited on the overall regulatory, economic, environmental, and energy aspects of the proposed rule. All comments submitted will be available in the Rules

Docket for examination by interested persons. A report summarizing each FAA-public contact concerned with the substance of this proposal will be filed in the Rules Docket.

Commenters wishing the FAA to acknowledge receipt of their mailed comments submitted in response to this proposal must submit a self-addressed, stamped postcard on which the following statement is made: ''Comments to Docket No. 99–SW–78–AD.'' The postcard will be date stamped and returned to the commenter.

Availability of SNPRMs

You may obtain a copy of this SNPRM by submitting a request to the FAA, Office of the Regional Counsel, Southwest Region, Attention: Rules Docket No. 99—SW–78–AD, 2601 Meacham Blvd., Room 663, Fort Worth, Texas 76137.

Discussion

A proposal to amend 14 CFR part 39 for ECF Model AS332C, L, L1, and L2 helicopters was published as a Notice of Proposed Rulemaking (NPRM) in the **Federal Register** on April 14, 2000 (65 FR 20104). That NPRM proposed to supersede AD 99–13–02, Amendment 39–11195 (64 FR 32399, June 17, 1999), which applies to ECF Model AS 332C, L, L1, and L2 helicopters. That NPRM would have continued to require the actions specified in AD 99–13–02 but would have added a fuel filter part number to the applicability. That NPRM was prompted by the discovery of blocked fuel filter by-pass valves. That condition, if not corrected, could result in power loss due to fuel starvation, engine flameouts, and a subsequent forced landing.

Since the issuance of that NPRM, Eurocopter France has issued Alert Service Bulletin No. 01.00.56, dated January 16, 2001 (ASB), which changes current compliance and operational procedures and adds a part number to the affected fuel filters. The Direction Generale De L'Aviation Civile, which is the airworthiness authority for France, classified this ASB as mandatory and issued AD's 1998–318–071(A)R6 and 1998–319–012(A)R6, both dated April 18, 2001, to ensure the continued airworthiness of these helicopters in France. The FAA has determined that the actions and all the fuel filter part numbers specified in the SB should be included in this proposal. The word ''practicable'' in the emergency procedure in paragraph (b) of the AD would also be changed to ''possible'' by this SNPRM to indicate that if both fuel filter clogged lights illuminate, the pilot should land as soon as possible. The word ''jammed'' would also be replaced by ''blocked'' throughout the AD.

Since this change expands the scope of the originally proposed rule, the FAA has determined that it is necessary to reopen the comment period to provide additional opportunity for public comment.

The FAA estimates that one helicopter of U.S. registry would be affected by the proposed AD, that it would take approximately 3 work hours to accomplish the proposed actions, and that the average labor rate is $60 per work hour. Based on these figures, the total cost impact of the proposed AD on U.S. operators is estimated to be $180, assuming no valve would need to be replaced.

The regulations proposed herein would not have a substantial direct effect on the States, on the relationship between the national Government and the States, or on the distribution of power and responsibilities among the various levels of government. Therefore, it is determined that this proposal would not have federalism implications under Executive Order 13132.

For the reasons discussed above, I certify that this proposed regulation (1) is not a ''significant regulatory action'' under Executive Order 12866; (2) is not a ''significant rule'' under the DOT Regulatory Policies and Procedures (44 FR 11034, February 26, 1979); and (3) if promulgated, will not have a significant economic impact, positive or negative, on a substantial number of small entities under the criteria of the Regulatory Flexibility Act. A copy of the draft regulatory evaluation prepared for this action is contained in the Rules Docket. A copy of it may be obtained by contacting the Rules Docket at the location provided under the caption **ADDRESSES.**

List of Subjects in 14 CFR Part 39

Air transportation, Aircraft, Aviation safety, Safety.

The Proposed Amendment

Accordingly, pursuant to the authority delegated to me by the Administrator, the Federal Aviation Administration proposes to amend part 39 of the Federal Aviation Regulations (14 CFR part 39) as follows:

PART 39—AIRWORTHINESS DIRECTIVES

1. The authority citation for part 39 continues to read as follows:

Authority: 49 U.S.C. 106(g), 40113, 44701.

§ 39.13 [Amended]

2. Section 39.13 is amended by removing Amendment 39–11195 (64 FR 32399, June 17, 1999) and by adding a new airworthiness directive to read as follows:

Eurocopter France: Docket No. 99–SW–78–AD. Supersedes AD 99–13–02, Amendment 39–11195, Docket No. 99–SW–17–AD.

Applicability: Eurocopter France Model AS 332C, L, L1, and L2 helicopters, with any of the following part-numbered fuel filters installed, certificated in any category:

Vendor part number	Eurocopter France part number
–4020P25	(704A44620031)
–4020P25–1	(704A44620034)
–4020P25–2	(704A44620035)
–4020P25–3	(704A44620036)
–4020P25–4	(704A44620044)
–4020P25–11	(704A44620037)

Note 1: This AD applies to each helicopter identified in the preceding applicability provision, regardless of whether it has been otherwise modified, altered, or repaired in the area subject to the requirements of this AD. For helicopters that have been modified, altered, or repaired so that the performance of the requirements of this AD is affected, the owner/operator must request approval for an alternative method of compliance in accordance with paragraph (d) of this AD. The request should include an assessment of the effect of the modification, alteration, or repair on the unsafe condition addressed by this AD; and if the unsafe condition has not been eliminated, the request should include specific proposed actions to address it.

Note 2: This AD does not apply to aircraft modified per Eurocopter MOD 0726087 or in compliance with Eurocopter AS 332 Service No. 28.00.38, dated March 15, 2001.

Compliance: Required as indicated, unless accomplished previously.

To prevent power loss due to fuel starvation, an engine flameout, and a subsequent forced landing, accomplish the following:

(a) Within 25 hours time-in-service (TIS), after any subsequent flight during which either fuel filter pre-clogging caution light illuminates, and after each installation of a new fuel filter assembly or filter element:

(1) Verify that the fuel filter by-pass valve (valve) correctly closes for each engine fuel filter in accordance with the Accomplishment Instructions, paragraph 2.B.1. of Eurocopter France Alert Service Bulletin Number 01.00.56 Revision 1, dated March 15, 2001 (ASB).

(2) Conduct a filter pre-clogging warning test in accordance with paragraph 2.B.2. of the ASB.

(3) If a blocked fuel filter element (open or closed) is detected during the pre-clogging warning test, clean the filter assembly in accordance with paragraph 2.B.4. of the ASB. After cleaning the filter assembly, repeat the requirements of paragraph (a)(2) of this AD.

(4) When the pre-clogging warning test result is satisfactory, repeat the requirements of paragraph (a)(1) of this AD.

(b) Within 25 hours TIS, insert a copy of this AD into the Rotorcraft Flight Manual

(RFM) or make the following pen and ink addition to the RFM Emergency Procedure for fuel filter clogged caution light illumination: ''If both fuel filter clogged caution lights illuminate, land as soon as possible.''

(c) If both filter clogged caution lights illuminate in flight, after landing, either:

(1) Accomplish the requirements of paragraphs (a)(1) through (a)(4) of this AD before further flight, or,

(2) Replace both fuel filter elements with airworthy fuel filter elements and conduct a one-time direct flight to a location where the requirements of paragraphs (a)(1) through (a)(4) of this AD can be accomplished before further flight.

(d) An alternative method of compliance or adjustment of the compliance time that provides an acceptable level of safety may be used if approved by the Manager, Regulations Group, Rotorcraft Directorate, FAA. Operators shall submit their requests through an FAA Principal Maintenance Inspector, who may concur or comment and then send it to the Manager, Regulations Group.

Note 3: Information concerning the existence of approved alternative methods of compliance with this AD, if any, may be obtained from the Manager, Regulations Group.

(e) Special flight permits will not be issued.

(f) The inspections shall be done in accordance with the Accomplishment Instructions, paragraphs 2.B.1, 2.B.2., and 2.B.4. of Eurocopter France Alert Service Bulletin No. 01.00.56 Revision 1, dated March 15, 2001. This incorporation by reference was approved by the Director of the Federal Register in accordance with 5 U.S.C. 552(a) and 1 CFR part 51. Copies may be obtained from American Eurocopter Corporation, Technical Support, 2701 Forum Drive, Grand Prairie, Texas 75053–4005. Copies may be inspected at the FAA, Office of the Regional Counsel, Southwest Region, 2601 Meacham Blvd., Room 663, Fort Worth, Texas; or at the Office of the Federal Register, 800 North Capitol Street, NW., suite 700, Washington, DC.

Note 4: The subject of this AD is addressed in Direction Generale De L'Aviation Civile (France) AD's 1998–318–071(A)R6 and 1998–319–012(A)R6, both dated April 18, 2001.

Issued in Fort Worth, Texas, on August 17, 2001.

Eric Bries,

Acting Manager, Rotorcraft Directorate, Aircraft Certification Service.

[FR Doc. 01–21753 Filed 8–28–01; 8:45 am]

BILLING CODE 4910–13–U

DEPARTMENT OF TRANSPORTATION

Federal Aviation Administration

14 CFR Part 39

[Docket No. 2001–NM–112–AD]

RIN 2120–AA64

Airworthiness Directives; Bombardier Model DHC–8–100, –200, and –300 Series Airplanes

AGENCY: Federal Aviation Administration, DOT.

ACTION: Notice of proposed rulemaking (NPRM).

SUMMARY: This document proposes the adoption of a new airworthiness directive (AD) that is applicable to certain Bombardier Model DHC–8–100, –200, and –300 series airplanes. This proposal would require repetitive inspections of the rudder pedal adjustment fittings for cracks and replacement of cracked fittings with new fittings. The proposal would also provide an optional terminating action. This action is necessary to detect and correct cracking of the rudder pedal adjustment fittings, which could lead to deformation of the fittings, resulting in jammed rudder pedals and loss of rudder control, with consequent reduced controllability of the airplane. This action is intended to address the identified unsafe condition.

DATES: Comments must be received by September 28, 2001.

ADDRESSES: Submit comments in triplicate to the Federal Aviation Administration (FAA), Transport Airplane Directorate, ANM–114, Attention: Rules Docket Number 2001–NM–112–AD, 1601 Lind Avenue, SW., Renton, Washington 98055–4056. Comments may be inspected at this location between 9 a.m. and 3 p.m., Monday through Friday, except Federal holidays. Comments may be submitted via fax to (425) 227–1232. Comments may also be sent via the Internet using the following address: 9-anm-nprmcomment@faa.gov. Comments sent via fax or the Internet must contain ''Docket No. 2001–NM–112–AD'' in the subject line and need not be submitted in triplicate. Comments sent via the Internet as attached electronic files must be formatted in Microsoft Word 97 for Windows or ASCII text.

The service information referenced in the proposed rule may be obtained from Bombardier, Inc., Bombardier Regional Aircraft Division, 123 Garratt Boulevard, Downsview, Ontario M3K 1Y5, Canada. This information may be examined at the FAA, Transport Airplane Directorate, 1601 Lind Avenue, SW., Renton, Washington; or at the FAA, New York Aircraft Certification Office, 10 Fifth Street, Third Floor, Valley Stream, New York.

FOR FURTHER INFORMATION CONTACT: Dan Parrillo, Aerospace Engineer, ANE–172, FAA, New York Aircraft Certification Office, 10 Fifth Street, Third Floor, Valley Stream, New York 11581; telephone (516) 256–7505; fax (516) 568–2716.

SUPPLEMENTARY INFORMATION:

Comments Invited

Interested persons are invited to participate in the making of the proposed rule by submitting such written data, views, or arguments as they may desire. Communications shall identify the Rules Docket number and be submitted in triplicate to the address specified above. All communications received on or before the closing date for comments, specified above, will be considered before taking action on the proposed rule. The proposals contained in this action may be changed in light of the comments received.

Submit comments using the following format:

- Organize comments issue-by-issue. For example, discuss a request to change the compliance time and a request to change the service bulletin reference as two separate issues.
- For each issue, state what specific change to the proposed AD is being requested.
- Include justification (*e.g.,* reasons or data) for each request.

Comments are specifically invited on the overall regulatory, economic, environmental, and energy aspects of the proposed rule. All comments submitted will be available, both before and after the closing date for comments, in the Rules Docket for examination by interested persons. A report summarizing each FAA-public contact concerned with the substance of this proposal will be filed in the Rules Docket.

Commenters wishing the FAA to acknowledge receipt of their comments submitted in response to this action must submit a self-addressed, stamped postcard on which the following statement is made: ''Comments to Docket Number 2001–NM–112–AD.'' The postcard will be date stamped and returned to the commenter.

Availability of NPRMs

Any person may obtain a copy of this NPRM by submitting a request to the FAA, Transport Airplane Directorate, ANM–114, Attention: Rules Docket

Number 2001–NM–112–AD, 1601 Lind Avenue, SW., Renton, Washington 98055–4056.

Discussion

Transport Canada Civil Aviation (TCCA), which is the airworthiness authority for Canada, notified the FAA that an unsafe condition may exist on certain Bombardier Model DHC–8 –100, –200, and –300 series airplanes. The TCCA advises that three incidents have been reported of stiff rudder pedal operation. These incidents were due to cracking of the rudder pedal adjustment fittings. If not corrected, cracking of the rudder pedal adjustment fittings can lead to deformation of the fittings, resulting in jammed rudder pedals and loss of rudder control, with consequent reduced controllability of the airplane.

Explanation of Relevant Service Information

Bombardier, Inc., has issued Alert Service Bulletin A8–27–91, dated September 12, 2000, and Revision A, dated November 23, 2000, which describe procedures for a detailed visual inspection of the rudder pedal adjustment fittings for cracks and replacement of cracked fittings with new aluminum or steel fittings. New aluminum fittings would need to be inspected within 5,000 flight hours after installation and thereafter at intervals not to exceed 1,000 flight hours. Replacement with steel fittings would constitute terminating action for the purposes of this AD. Accomplishment of the actions specified in the service bulletin is intended to adequately address the identified unsafe condition.

The TCCA classified this service bulletin as mandatory and issued Canadian airworthiness directive CF–2001–04, dated January 25, 2001, in order to assure the continued airworthiness of these airplanes in Canada. That airworthiness directive specifies that, if there is any instance of stiff operation or jamming of the rudder pedals during flight, the rudder pedal adjustment fittings must be inspected in accordance with the Bombardier service bulletin prior to further flight.

FAA's Conclusions

This airplane model is manufactured in Canada and is type certificated for operation in the United States under the provisions of section 21.29 of the Federal Aviation Regulations (14 CFR 21.29) and the applicable bilateral airworthiness agreement. Pursuant to this bilateral airworthiness agreement, the TCCA has kept the FAA informed of the situation described above. The FAA has examined the findings of the TCCA, reviewed all available information, and determined that AD action is necessary for products of this type design that are certificated for operation in the United States.

Explanation of Requirements of Proposed Rule

Since an unsafe condition has been identified that is likely to exist or develop on other airplanes of the same type design registered in the United States, the proposed AD would require accomplishment of the actions specified in the service bulletin described previously.

Cost Impact

The FAA estimates that 188 airplanes of U.S. registry would be affected by this proposed AD, that it would take approximately 1 work hour per airplane to accomplish the proposed inspection, and that the average labor rate is $60 per work hour. Based on these figures, the cost impact of the proposed AD on U.S. operators is estimated to be $11,280, or $60 per airplane, per inspection cycle.

The cost impact figure discussed above is based on assumptions that no operator has yet accomplished any of the proposed requirements of this AD action, and that no operator would accomplish those actions in the future if this proposed AD were not adopted. The cost impact figures discussed in AD rulemaking actions represent only the time necessary to perform the specific actions actually required by the AD. These figures typically do not include incidental costs, such as the time required to gain access and close up, planning time, or time necessitated by other administrative actions.

Regulatory Impact

The regulations proposed herein would not have a substantial direct effect on the States, on the relationship between the national Government and the States, or on the distribution of power and responsibilities among the various levels of government. Therefore, it is determined that this proposal would not have federalism implications under Executive Order 13132.

For the reasons discussed above, I certify that this proposed regulation (1) is not a ''significant regulatory action'' under Executive Order 12866; (2) is not a ''significant rule'' under the DOT Regulatory Policies and Procedures (44 FR 11034, February 26, 1979); and (3) if promulgated, will not have a significant economic impact, positive or negative, on a substantial number of small entities under the criteria of the Regulatory Flexibility Act. A copy of the draft regulatory evaluation prepared for this action is contained in the Rules Docket. A copy of it may be obtained by contacting the Rules Docket at the location provided under the caption **ADDRESSES**.

List of Subjects in 14 CFR Part 39

Air transportation, Aircraft, Aviation safety, Safety.

The Proposed Amendment

Accordingly, pursuant to the authority delegated to me by the Administrator, the Federal Aviation Administration proposes to amend part 39 of the Federal Aviation Regulations (14 CFR part 39) as follows:

PART 39—AIRWORTHINESS DIRECTIVES

1. The authority citation for part 39 continues to read as follows:

Authority: 49 U.S.C. 106(g), 40113, 44701.

§ 39.13 [Amended]

2. Section 39.13 is amended by adding the following new airworthiness directive:

Bombardier, Inc. (Formerly de Havilland, Inc.) Docket 2001–NM–112–AD.

Applicability: Model DHC–8–100, –200, and –300 series airplanes, serial numbers 003 to 563 inclusive, certificated in any category.

Note 1: This AD applies to each airplane identified in the preceding applicability provision, regardless of whether it has been otherwise modified, altered, or repaired in the area subject to the requirements of this AD. For airplanes that have been modified, altered, or repaired so that the performance of the requirements of this AD is affected, the owner/operator must request approval for an alternative method of compliance in accordance with paragraph (e) of this AD. The request should include an assessment of the effect of the modification, alteration, or repair on the unsafe condition addressed by this AD; and, if the unsafe condition has not been eliminated, the request should include specific proposed actions to address it.

Compliance: Required as indicated, unless accomplished previously.

To detect and correct cracking of the rudder pedal adjustment fittings, which could lead to deformation of the fittings, resulting in jammed rudder pedals and loss of rudder control, with consequent reduced controllability of the airplane, accomplish the following:

Inspection

(a) Inspect the rudder pedal adjustment fittings having part number (P/N) 82710038–101 for cracks, in accordance with Bombardier Service Bulletin A8–27–91, dated September 12, 2000, or Revision A, dated November 23, 2000, at the times specified in paragraphs (a)(1) and (a)(2) of this AD.

(1) Within 5,000 flight hours since the date of manufacture of the airplane or 500 flight hours after the effective date of this AD, whichever occurs later, and

(2) Prior to further flight, whenever an instance of stiff operation or jamming of the rudder pedals occurs during flight.

(b) If no cracks are detected: Repeat the inspection of the rudder pedal adjustment fittings having P/N 82710038–101, in accordance with Bombardier Service Bulletin A8–27–91, dated September 12, 2000, or Revision A, dated November 23, 2000, at intervals not to exceed 1,000 flight hours, until accomplishment of paragraph (d) of this AD.

(c) If cracks are detected: Prior to further flight, replace the rudder pedal adjustment fittings having P/N 82710038–101 with new aluminum fittings having the same P/N (82710038–101), or with steel fittings having P/N 82710080–101, in accordance with Bombardier Service Bulletin A8–27–91, dated September 12, 2000, or Revision A, dated November 23, 2000.

Terminating Action

(d) Replacement of the rudder pedal adjustment fittings having P/N 82710038–101, with steel rudder pedal adjustment fittings having P/N 82710080–101, constitutes terminating action for the repetitive inspections required by paragraphs (a) and (b) of this AD.

Alternative Methods of Compliance

(e) An alternative method of compliance or adjustment of the compliance time that provides an acceptable level of safety may be used if approved by the Manager, New York Aircraft Certification Office, FAA. Operators shall submit their requests through an appropriate FAA Principal Maintenance Inspector, who may add comments and then send it to the Manager, New York ACO.

Note 2: Information concerning the existence of approved alternative methods of compliance with this AD, if any, may be obtained from the New York ACO.

Special Flight Permits

(f) Special flight permits may be issued in accordance with sections 21.197 and 21.199 of the Federal Aviation Regulations (14 CFR 21.197 and 21.199) to operate the airplane to a location where the requirements of this AD can be accomplished.

Note 3: The subject of this AD is addressed in Canadian airworthiness directive CF–2001–04, dated January 25, 2001.

Issued in Renton, Washington, on August 22, 2001.

Ali Bahrami,

Acting Manager, Transport Airplane Directorate, Aircraft Certification Service.

[FR Doc. 01–21752 Filed 8–28–01; 8:45 am]

BILLING CODE 4910–13–U

DEPARTMENT OF TRANSPORTATION

Federal Aviation Administration

14 CFR Part 39

[Docket No. 2001–NM–130–AD]

RIN 2120–AA64

Airworthiness Directives; McDonnell Douglas Model MD–90–30 Series Airplanes

AGENCY: Federal Aviation Administration, DOT.

ACTION: Notice of proposed rulemaking (NPRM).

SUMMARY: This document proposes the adoption of a new airworthiness directive (AD) that is applicable to certain McDonnell Douglas Model MD–90–30 series airplanes. This proposal would require installation of two arcing protection brackets below and behind the circuit breakers located in the generator control rack in the electrical/electronics compartment. This action is necessary to prevent arcing between circuit breaker terminals and adjacent equipment and structure located in the generator control rack in the electrical/electronics compartment, which, if not corrected, could result in possible electrical shock to maintenance personnel during maintenance operations. This action is intended to address the identified unsafe condition.

DATES: Comments must be received by October 15, 2001.

ADDRESSES: Submit comments in triplicate to the Federal Aviation Administration (FAA), Transport Airplane Directorate, ANM–114, Attention: Rules Docket No. 2001–NM–130–AD, 1601 Lind Avenue, SW., Renton, Washington 98055–4056. Comments may be inspected at this location between 9:00 a.m. and 3:00 p.m., Monday through Friday, except Federal holidays. Comments may be submitted via fax to (425) 227–1232. Comments may also be sent via the Internet using the following address: *9-anm-nprmcomment@faa.gov.* Comments sent via fax or the Internet must contain ''Docket No. 2001–NM–130–AD'' in the subject line and need not be submitted in triplicate. Comments sent via the Internet as attached electronic files must be formatted in Microsoft Word 97 for Windows or ASCII text.

The service information referenced in the proposed rule may be obtained from Boeing Commercial Aircraft Group, Long Beach Division, 3855 Lakewood Boulevard, Long Beach, California 90846, Attention: Data and Service Management, Dept. C1–L5A (D800–0024). This information may be examined at the FAA, Transport Airplane Directorate, 1601 Lind Avenue, SW., Renton, Washington; or at FAA, Los Angeles Aircraft Certification Office, 3960 Paramount Boulevard, Lakewood, California.

FOR FURTHER INFORMATION CONTACT: George Y. Mabuni, Aerospace Engineer, Systems and Equipment Branch, ANM–130L, FAA, Los Angeles Aircraft Certification Office, 3960 Paramount Boulevard, Lakewood, California 90712–4137; telephone (562) 627–5341; fax (562) 627–5210.

SUPPLEMENTARY INFORMATION:

Comments Invited

Interested persons are invited to participate in the making of the proposed rule by submitting such written data, views, or arguments as they may desire. Communications shall identify the Rules Docket number and be submitted in triplicate to the address specified above. All communications received on or before the closing date for comments, specified above, will be considered before taking action on the proposed rule. The proposals contained in this action may be changed in light of the comments received.

Submit comments using the following format:

- Organize comments issue-by-issue. For example, discuss a request to change the compliance time and a request to change the service bulletin reference as two separate issues.
- For each issue, state what specific change to the proposed AD is being requested.
- Include justification (*e.g.,* reasons or data) for each request.

Comments are specifically invited on the overall regulatory, economic, environmental, and energy aspects of the proposed rule. All comments submitted will be available, both before and after the closing date for comments, in the Rules Docket for examination by interested persons. A report summarizing each FAA-public contact concerned with the substance of this proposal will be filed in the Rules Docket.

Commenters wishing the FAA to acknowledge receipt of their comments submitted in response to this action must submit a self-addressed, stamped postcard on which the following statement is made: ''Comments to Docket Number 2001–NM–130–AD.'' The postcard will be date stamped and returned to the commenter.

Availability of NPRMs

Any person may obtain a copy of this NPRM by submitting a request to the

FAA, Transport Airplane Directorate, ANM–114, Attention: Rules Docket No. 2001–NM–130–AD, 1601 Lind Avenue, SW., Renton, Washington 98055–4056.

Discussion

The FAA has received a report indicating that evidence of arcing was found between circuit breaker terminals and adjacent equipment and structure located on the generator control rack in the electrical/electronics compartment. Investigation revealed that arcing occurred due to open access to circuit breaker terminals. Such arcing, if not corrected, could result in possible electrical shock to maintenance personnel during maintenance operations.

Explanation of Relevant Service Information

The FAA has reviewed and approved McDonnell Douglas Service Bulletin MD90–24–007, dated February 7, 1996, which describes procedures for installation of two arcing protection brackets below and behind the circuit breakers located in the generator control rack in the electrical/electronics compartment. Accomplishment of the actions specified in the service bulletin is intended to adequately address the identified unsafe condition.

Explanation of Requirements of Proposed Rule

Since an unsafe condition has been identified that is likely to exist or develop on other products of this same type design, the proposed AD would require accomplishment of the actions specified in the service bulletin described previously.

Cost Impact

There are approximately 26 Model MD–90–30 series airplanes of the affected design in the worldwide fleet. The FAA estimates that 14 airplanes of U.S. registry would be affected by this proposed AD, that it would take approximately 2 work hours per airplane to accomplish the proposed actions, and that the average labor rate is $60 per work hour. Required parts would cost approximately $200 per airplane. Based on these figures, the cost impact of the proposed AD on U.S. operators is estimated to be $4,480, or $320 per airplane.

The cost impact figure discussed above is based on assumptions that no operator has yet accomplished any of the proposed requirements of this AD action, and that no operator would accomplish those actions in the future if this proposed AD were not adopted. The cost impact figures discussed in AD rulemaking actions represent only the time necessary to perform the specific actions actually required by the AD. These figures typically do not include incidental costs, such as the time required to gain access and close up, planning time, or time necessitated by other administrative actions.

Regulatory Impact

The regulations proposed herein would not have a substantial direct effect on the States, on the relationship between the national Government and the States, or on the distribution of power and responsibilities among the various levels of government. Therefore, it is determined that this proposal would not have federalism implications under Executive Order 13132.

For the reasons discussed above, I certify that this proposed regulation (1) is not a ''significant regulatory action'' under Executive Order 12866; (2) is not a ''significant rule'' under the DOT Regulatory Policies and Procedures (44 FR 11034, February 26, 1979); and (3) if promulgated, will not have a significant economic impact, positive or negative, on a substantial number of small entities under the criteria of the Regulatory Flexibility Act. A copy of the draft regulatory evaluation prepared for this action is contained in the Rules Docket. A copy of it may be obtained by contacting the Rules Docket at the location provided under the caption **ADDRESSES**.

List of Subjects in 14 CFR Part 39

Air transportation, Aircraft, Aviation safety, Safety.

The Proposed Amendment

Accordingly, pursuant to the authority delegated to me by the Administrator, the Federal Aviation Administration proposes to amend part 39 of the Federal Aviation Regulations (14 CFR part 39) as follows:

PART 39—AIRWORTHINESS DIRECTIVES

1. The authority citation for part 39 continues to read as follows:

Authority: 49 U.S.C. 106(g), 40113, 44701.

§ 39.13 [Amended]

2. Section 39.13 is amended by adding the following new airworthiness directive:

McDonnell Douglas: Docket 2001–NM–130–AD.

Applicability: Model MD–90–30 series airplanes, certificated in any category; as identified in McDonnell Douglas Service Bulletin MD90–24–007, dated February 7, 1996.

Note 1: This AD applies to each airplane identified in the preceding applicability provision, regardless of whether it has been modified, altered, or repaired in the area subject to the requirements of this AD. For airplanes that have been modified, altered, or repaired so that the performance of the requirements of this AD is affected, the owner/operator must request approval for an alternative method of compliance in accordance with paragraph (b) of this AD. The request should include an assessment of the effect of the modification, alteration, or repair on the unsafe condition addressed by this AD; and, if the unsafe condition has not been eliminated, the request should include specific proposed actions to address it.

Compliance: Required as indicated, unless accomplished previously.

To prevent arcing between circuit breaker terminals and adjacent equipment and structure located on the generator control rack in the electrical/electronics compartment, and consequent electrical shock to maintenance personnel during maintenance operations, accomplish the following:

Installation

(a) Within one year after the effective date of this AD, install two arcing protection brackets below and behind the circuit breakers located in the generator control rack in the electrical/electronics compartment per the Accomplishment Instructions of McDonnell Douglas Service Bulletin MD90–24–007, dated February 7, 1996.

Alternative Methods of Compliance

(b) An alternative method of compliance or adjustment of the compliance time that provides an acceptable level of safety may be used if approved by the Manager, Los Angeles Aircraft Certification Office (ACO), FAA. Operators shall submit their requests through an appropriate FAA Principal Maintenance Inspector, who may add comments and then send it to the Manager, Los Angeles ACO.

Note 2: Information concerning the existence of approved alternative methods of compliance with this AD, if any, may be obtained from the Los Angeles ACO.

Special Flight Permit

(c) Special flight permits may be issued in accordance with sections 21.197 and 21.199 of the Federal Aviation Regulations (14 CFR 21.197 and 21.199) to operate the airplane to a location where the requirements of this AD can be accomplished.

Issued in Renton, Washington, on August 22, 2001.

Ali Bahrami,

Acting Manager, Transport Airplane Directorate, Aircraft Certification Service.

[FR Doc. 01–21751 Filed 8–28–01; 8:45 am]

BILLING CODE 4910–13–U

DEPARTMENT OF TRANSPORTATION

Federal Aviation Administration

14 CFR Part 39

[Docket No. 2001–NM–197–AD]

RIN 2120–AA64

Airworthiness Directives; McDonnell Douglas Model DC–9–81, –82, –83, and –87 Series Airplanes; Model MD–88 Airplanes; and Model MD–90–30 Series Airplanes

AGENCY: Federal Aviation Administration, DOT.

ACTION: Notice of proposed rulemaking (NPRM).

SUMMARY: This document proposes the adoption of a new airworthiness directive (AD) that is applicable to certain McDonnell Douglas Model DC–9–81, –82, –83, and –87 series airplanes; Model MD–88 airplanes; and Model MD–90–30 series airplanes. This proposal would require replacement of certain main landing gear (MLG) shock strut piston assemblies with new or serviceable, improved assemblies, which would constitute terminating action for the requirements of certain other ADs. This action is necessary to prevent fatigue cracking of the MLG shock strut pistons, which could result in failure of the MLG shock strut pistons during landing or jacking of the airplane, and consequent damage to the airplane structure and injury to the passengers, flightcrew, or ground personnel. This action is intended to address the identified unsafe condition.

DATES: Comments must be received by September 28, 2001.

ADDRESSES: Submit comments in triplicate to the Federal Aviation Administration (FAA), Transport Airplane Directorate, ANM–114, Attention: Rules Docket No. 2001–NM–197–AD, 1601 Lind Avenue, SW., Renton, Washington 98055–4056. Comments may be inspected at this location between 9 a.m. and 3 p.m., Monday through Friday, except Federal holidays. Comments may be submitted via fax to (425) 227–1232. Comments may also be sent via the Internet using the following address: *9-anm-nprmcomment@faa.gov.* Comments sent via fax or the Internet must contain ''Docket No. 2001–NM–197–AD'' in the subject line and need not be submitted in triplicate. Comments sent via the Internet as attached electronic files must be formatted in Microsoft Word 97 for Windows or ASCII text.

The service information referenced in the proposed rule may be obtained from Boeing Commercial Aircraft Group, Long Beach Division, 3855 Lakewood Boulevard, Long Beach, California 90846, Attention: Data and Service Management, Dept. C1–L5A (D800–0024). This information may be examined at the FAA, Transport Airplane Directorate, 1601 Lind Avenue, SW., Renton, Washington; or at the FAA, Los Angeles Aircraft Certification Office, 3960 Paramount Boulevard, Lakewood, California.

FOR FURTHER INFORMATION CONTACT: David Y. J. Hsu, Aerospace Engineer, Airframe Branch, ANM–120L, FAA, Los Angeles Aircraft Certification Office, 3960 Paramount Boulevard, Lakewood, California 90712–4137; telephone (562) 627–5323; fax (562) 627–5210.

SUPPLEMENTARY INFORMATION:

Comments Invited

Interested persons are invited to participate in the making of the proposed rule by submitting such written data, views, or arguments as they may desire. Communications shall identify the Rules Docket number and be submitted in triplicate to the address specified above. All communications received on or before the closing date for comments, specified above, will be considered before taking action on the proposed rule. The proposals contained in this action may be changed in light of the comments received.

Submit comments using the following format:

- Organize comments issue-by-issue. For example, discuss a request to change the compliance time and a request to change the service bulletin reference as two separate issues.
- For each issue, state what specific change to the proposed AD is being requested.
- Include justification (e.g., reasons or data) for each request.

Comments are specifically invited on the overall regulatory, economic, environmental, and energy aspects of the proposed rule. All comments submitted will be available, both before and after the closing date for comments, in the Rules Docket for examination by interested persons. A report summarizing each FAA-public contact concerned with the substance of this proposal will be filed in the Rules Docket.

Commenters wishing the FAA to acknowledge receipt of their comments submitted in response to this action must submit a self-addressed, stamped postcard on which the following statement is made: ''Comments to Docket Number 2001–NM–197–AD.'' The postcard will be date stamped and returned to the commenter.

Availability of NPRMs

Any person may obtain a copy of this NPRM by submitting a request to the FAA, Transport Airplane Directorate, ANM–114, Attention: Rules Docket No. 2001–NM–197–AD, 1601 Lind Avenue, SW., Renton, Washington 98055–4056.

Discussion

The FAA has received reports of three instances of failure of a main landing gear (MLG) shock strut piston on McDonnell Douglas Model DC–9–82 series airplanes and a Model MD–88 airplane. Subsequent inspections required by ADs 96–19–09, amendment 39–9756 (61 FR 48617, September 16, 1996); 99–13–07, amendment 39–11201 (64 FR 33392, June 23, 1999); and 2000–03–08, amendment 39–11567 (65 FR 7719, February 16, 2000) also revealed numerous fatigue cracks in the areas of the torque link lugs and small radius on the base of the jackball of the MLG shock strut pistons. Such fatigue cracking, if not corrected, could result in failure of the MLG shock strut pistons during landing or jacking of the airplane, and consequent damage to the airplane structure and injury to the passengers, flightcrew, or ground personnel.

The MLG shock strut pistons installed on McDonnell Douglas Model MD–90–30 series airplanes are similar in design to those installed on the affected Model DC–9–81, –82, –83, and –87 series airplanes, and Model MD–88 airplanes. Therefore, all of these airplanes may be subject to the same unsafe condition.

Other Relevant Rulemaking

The FAA has previously issued three other ADs that concern the MLG shock strut pistons on McDonnell Douglas Model DC–9–81, –82, –83, and –87 series airplanes; Model MD–88 airplanes; and Model MD–90–30 series airplanes:

1. AD 99–13–07, which is applicable to certain Model DC–9–81, –82, –83, and –87 series airplanes, Model MD–88 airplanes, and Model MD–90–30 series airplanes, requires repetitive inspections to detect cracking of the MLG shock strut pistons, and replacement of a cracked piston with a new or serviceable part.

2. AD 2000–03–08, which is applicable to certain Model MD–90–30 series airplanes, requires repetitive fluorescent penetrant and magnetic particle inspection to detect fatigue cracking of the MLG shock strut pistons, and repair, if necessary.

3. AD 2001–09–18, which is applicable to certain Model DC–9–81, –82, –83, and –87 series airplanes, and

Model MD–88 airplanes, requires, among other actions, repetitive dye penetrant and magnetic particle inspection to detect cracks of the MLG shock strut pistons; repair and replacement of discrepant parts; and installation of a preventative modification; as applicable. (This AD superseded AD 96–19–09.)

This proposed AD would constitute terminating action for the requirements of those ADs.

Explanation of Relevant Service Information

The FAA has reviewed and approved Boeing Service Bulletin MD80–32–309, Revision 01, dated April 25, 2001 (for Model DC–9–81, –82, –83, and –87 series airplanes, and Model MD–88 airplanes), and Boeing Service Bulletin MD90–32–031, Revision 01, dated April 25, 2001 (for Model MD–90–30 series airplanes); as applicable. The service bulletins describe procedures for replacement of the MLG shock strut piston assemblies, left and right-hand side, with new or serviceable, improved assemblies, which would eliminate the need for the requirements of certain ADs (described above). Accomplishment of the actions specified in the service bulletins is intended to adequately address the identified unsafe condition.

Explanation of Requirements of Proposed Rule

Since an unsafe condition has been identified that is likely to exist or develop on other products of this same type design, the proposed AD would require accomplishment of the actions specified in the service bulletins described previously.

Cost Impact

There are approximately 1,380 McDonnell Douglas Model DC–9–81, –82, –83, and –87 series airplanes; Model MD–88 airplanes; and Model MD–90–30 series airplanes of the affected design in the worldwide fleet. The FAA estimates that 820 airplanes of U.S. registry would be affected by this proposed AD, that it would take approximately 28 work hours per airplane to accomplish the proposed actions, and that the average labor rate is $60 per work hour. The manufacturer has committed previously to its customers that it will bear the cost of replacement parts, subject to the conditions in the warranty. As a result, the cost of those parts is not attributable to this proposed AD. Based on these figures, the cost impact of the proposed AD on U.S. operators is estimated to be $1,377,600, or $1,680 per airplane.

The cost impact figure discussed above is based on assumptions that no operator has yet accomplished any of the proposed requirements of this AD action, and that no operator would accomplish those actions in the future if this proposed AD were not adopted. The cost impact figures discussed in AD rulemaking actions represent only the time necessary to perform the specific actions actually required by the AD. These figures typically do not include incidental costs, such as the time required to gain access and close up, planning time, or time necessitated by other administrative actions.

Regulatory Impact

The regulations proposed herein would not have a substantial direct effect on the States, on the relationship between the national Government and the States, or on the distribution of power and responsibilities among the various levels of government. Therefore, it is determined that this proposal would not have federalism implications under Executive Order 13132.

For the reasons discussed above, I certify that this proposed regulation (1) is not a ''significant regulatory action'' under Executive Order 12866; (2) is not a ''significant rule'' under the DOT Regulatory Policies and Procedures (44 FR 11034, February 26, 1979); and (3) if promulgated, will not have a significant economic impact, positive or negative, on a substantial number of small entities under the criteria of the Regulatory Flexibility Act. A copy of the draft regulatory evaluation prepared for this action is contained in the Rules Docket. A copy of it may be obtained by contacting the Rules Docket at the location provided under the caption **ADDRESSES.**

List of Subjects in 14 CFR Part 39

Air transportation, Aircraft, Aviation safety, Safety.

The Proposed Amendment

Accordingly, pursuant to the authority delegated to me by the Administrator, the Federal Aviation Administration proposes to amend part 39 of the Federal Aviation Regulations (14 CFR part 39) as follows:

PART 39—AIRWORTHINESS DIRECTIVES

1. The authority citation for part 39 continues to read as follows:

Authority: 49 U.S.C. 106(g), 40113, 44701.

§ 39.13 [Amended]

2. Section 39.13 is amended by adding the following new airworthiness directive:

McDonnell Douglas: Docket 2001–NM–197–AD.

Applicability: Model DC–9–81, –82, –83, and –87 series airplanes, and Model MD–88 airplanes, as listed in Boeing Service Bulletin MD80–32–309, Revision 01, dated April 25, 2001; and Model MD–90–30 series airplanes, as listed in Boeing Service Bulletin MD90–32–031, Revision 01, dated April 25, 2001; certificated in any category.

Note 1: This AD applies to each airplane identified in the preceding applicability provision, regardless of whether it has been modified, altered, or repaired in the area subject to the requirements of this AD. For airplanes that have been modified, altered, or repaired so that the performance of the requirements of this AD is affected, the owner/operator must request approval for an alternative method of compliance in accordance with paragraph (c) of this AD. The request should include an assessment of the effect of the modification, alteration, or repair on the unsafe condition addressed by this AD; and, if the unsafe condition has not been eliminated, the request should include specific proposed actions to address it.

Compliance: Required as indicated, unless accomplished previously.

To prevent fatigue cracking of the main landing gear (MLG) shock strut pistons, which could result in failure of the MLG shock strut pistons during landing or jacking of the airplane, and consequent damage to the airplane structure and injury to the passengers, flightcrew, or ground personnel, accomplish the following:

Replacement

(a) Before the accumulation of 30,000 total landings, or within 5,000 landings after the effective date of this AD, whichever occurs later: Replace the MLG shock strut piston assemblies, left and right-hand sides, with new or serviceable, improved assemblies, per the Accomplishment Instructions of Boeing Service Bulletin MD80–32–309, Revision 01, dated April 25, 2001 (for Model DC–9–81, –82, –83, and –87 series airplanes, and Model MD–88 airplanes); or Boeing Service Bulletin MD90–32–031, Revision 01, dated April 25, 2001 (for Model MD–90–30 series airplanes); as applicable.

Note 2: Accomplishment of the replacement specified in Boeing Service Bulletin MD80–32–309, dated January 31, 2000 (for Model DC–9–81, –82, –83, and –87 series airplanes, and Model MD–88 airplanes); or Boeing Service Bulletin MD90–32–031, dated January 31, 2000 (for Model MD–90–30 series airplanes); as applicable; before the effective date of this AD, is considered acceptable for compliance with the requirement of paragraph (a) of this AD.

Compliance With Requirements of Other ADs

(b) Accomplishment of the replacement required by paragraph (a) of this AD constitutes terminating action for the requirements of ADs 99–13–07, amendment 39–11201, 2000–03–08, amendment 39–11567, and 2001–09–18, amendment 39–12225.

Alternative Methods of Compliance

(c) An alternative method of compliance or adjustment of the compliance time that provides an acceptable level of safety may be used if approved by the Manager, Los Angeles Aircraft Certification Office (ACO), FAA. Operators shall submit their requests through an appropriate FAA Principal Maintenance Inspector, who may add comments and then send it to the Manager, Los Angeles ACO.

Note 3: Information concerning the existence of approved alternative methods of compliance with this AD, if any, may be obtained from the Los Angeles ACO.

Special Flight Permit

(d) Special flight permits may be issued in accordance with §§ 21.197 and 21.199 of the Federal Aviation Regulations (14 CFR 21.197 and 21.199) to operate the airplane to a location where the requirements of this AD can be accomplished.

Issued in Renton, Washington, on August 22, 2001.

Ali Bahrami,

Acting Manager, Transport Airplane Directorate, Aircraft Certification Service.

[FR Doc. 01–21750 Filed 8–28–01; 8:45 am]

BILLING CODE 4910–13–U

DEPARTMENT OF TRANSPORTATION

Federal Aviation Administration

14 CFR Part 71

[Airspace Docket No. 00–ANM–32]

Proposed Revision of Class E Airspace, Holyoke, CO

AGENCY: Federal Aviation Administration (FAA), DOT.

ACTION: Supplemental, Notice of Proposed Rulemaking (NPRM).

SUMMARY: This Supplemental action is necessary to put before the public the correct NPRM for Holyoke, CO. The previous NPRM that was published in the **Federal Register** (66 FR 38224) on July 23, 2001, was published, inadvertently, with sections from another pending action for Yakima, WA. This action proposes to revise the Class E airspace at Holyoke, CO. A newly constructed runway at the Holyoke Airport resulted in a change to the Airport Reference Point (ARP) coordinates. The change of the ARP coordinates requires an amendment of the legal description of Holyoke Airport Class E airspace to reflect the new coordinates.

DATES: Comments must be received on or before October 15, 2001.

ADDRESSES: Send comments on the proposal in triplicate to: Manager, Airspace Branch, ANM–520, Federal Aviation Administration, Docket No. 00–ANM–32, 1601 Lind Avenue SW, Renton, Washington 98055–4056.

An informal docket may also be examined during normal business hours in the office of the Manager, Air Traffic Division, Airspace Branch, at the address listed above.

FOR FURTHER INFORMATION CONTACT: Brian Durham, ANM–520.7, Federal Aviation Administration, Docket No. 00–ANM–32, 1601 Lind Avenue SW., Renton, Washington 98055–4056: telephone number: (425) 227–2527.

SUPPLEMENTARY INFORMATION:

Comments Invited

Interested parties are invited to participate in this proposed rulemaking by submitting such written data, views, or arguments, as they may desire. Comments that provide the factual basis supporting the views and suggestions presented are particularly helpful in developing reasoned regulatory decisions on the proposal. Comments are specifically invited on the overall regulatory, aeronautical, economic, environmental, and energy related aspects of the proposal. Communications should identify the airspace docket number and be submitted in triplicate to the address listed above. Commenters wishing the FAA to acknowledge receipt of their comments on this action must submit, with those comments, a self-addressed stamped postcard on which the following statement is made: ''Comments to Airspace Docket No. 00–ANM–32.'' The postcard will be date/time stamped and returned to the commenter. All communications received on or before the specified closing date for comments will be considered before taking action on the proposed rule. The proposal contained in this action may be changed in the light of comments received. All comments submitted will be available for examination at the address listed above both before and after the closing date for comments. A report summarizing each substantive public contact with FAA personnel concerned with this rulemaking will be filed in the docket.

Availability of NPRM's

Any person may obtain a copy of this NPRM by submitting a request to the Federal Aviation Administration, Airspace Branch, ANM–520, 1601 Lind Avenue SW, Renton, Washington 98055–4056. Communications must identify the docket number of this NPRM. Persons interested in being placed on a mailing list for future NPRM's should also request a copy of Advisory Circular No. 11–2A, which describes the application procedure.

The Proposal

The FAA is considering an amendment to Title 14 Code of Federal Regulations, part 71 (14 CFR part 71) by revising Class E airspace legal description at Holyoke, CO. A newly constructed runway at the Holyoke Airport resulted in a change to the ARP, which has made this proposal necessary. The airspace description for the Class E5, 700-feet and 1,200-feet controlled airspace above the surface of the earth, at Holyoke would be changed by this proposal to reflect the new ARP reference. The intended effect of this proposal is to provide the correct legal description for the airspace at Holyoke.

The area would be depicted on aeronautical charts for pilot reference. The coordinates for this airspace docket are based on North American Datum 83. Class E airspace areas extending upward from 700-feet or more above the surface of the earth, are published in Paragraph 6005, of FAA Order 7400.9H dated September 1, 2000, and effective September 16, 2000, which is incorporated by reference in 14 CFR 71.1. The Class E airspace designation listed in this document would be published subsequently in the Order.

The FAA has determined that this proposed regulation only involves an established body of technical regulations for which frequent and routine amendments are necessary to keep them operationally current. It, therefore, (1) is not a ''significant regulatory action'' under Executive Order 12866; (2) is not a ''significant rule'' under DOT Regulatory Policies and Procedures (44 FR 11013; February 26, 1979); and (3) does not warrant preparation of a Regulatory Evaluation as the anticipated impact is so minimal. Since this is a routine matter that will only affect air traffic procedures and air navigation, it is certified that this rule, when promulgated, will not have a significant economic impact on a substantial number of small entities under the criteria of the Regulatory Flexibility Act.

List of Subjects in 14 CFR Part 71

Airspace, Incorporation by reference, Navigation (air).

The Proposed Amendment

In consideration of the foregoing, the Federal Aviation Administration proposes to amend 14 CFR part 71 as follows:

PART 71—DESIGNATION OF CLASS A, CLASS B, CLASS C, CLASS D, AND CLASS E AIRSPACE AREAS; AIRWAYS; ROUTES; AND REPORTING POINTS

1. The authority citation for 14 CFR part 71 continues to read as follows:

Authority: 49 U.S.C. 106(g), 40103, 40113, 40120; E.O. 10854, 24 FR 9565, 3 CFR, 1959–1963 Comp., p. 389.

§ 71.1 [Amended]

2. The incorporation by reference in 14 CFR 71.1 of the Federal Aviation Administration Order 7400.9H, Airspace Designations and Reporting Points, dated September 1, 2000, and effective September 16, 2000, is amended as follows:

Paragraph 6005 Class E Airspace Areas Extending Upward From 700-feet or More Above the Surface of the Earth.

* * * * *

ANM CO E5 Holyoke, CO [Revised]

Holyoke Airport, CO
(Lat. 40°34′10″N., long. 102°16′22″W.)
Heginbotham NDB
(Lat. 40°34′53″N., long. 102°16′59″W.)
That airspace extending upward from 700 feet above the surface within the 6.7-mile radius of the Holyoke Airport, and within 2.5 miles each side of the 325° bearing from the Heginbotham NDB extending from the 6.7-mile radius to 7 miles northwest of the NDB; excluding that airspace within Federal Airways.

* * * * *

Issued in Seattle, Washington, on August 15, 2001.

Daniel A. Boyle,

Assistant Manager, Air Traffic Division, Northwest Mountain Region.

[FR Doc. 01–21819 Filed 8–28–01; 8:45 am]

BILLING CODE 4910–13–M

DEPARTMENT OF TRANSPORTATION

Federal Aviation Administration

14 CFR Part 71

(Airspace Docket No. 2001–ASW–13)

Proposed Establishment of Class E Airspace; Angel Fire Airport, Angel Fire, NM

AGENCY: Federal Aviation Administration (FAA), DOT.

ACTION: Notice of proposed rulemaking.

SUMMARY: This document proposes to establish Class E airspace at Angel Fire Airport, Angel Fire, NM. The development of an area navigation (RNAV) global positioning system (GPS) standard instrument approach procedure (SIAP), to Angel Fire Airport, Angel Fire, NM, has made this rule necessary. The intended effect of this proposal is to provide adequate controlled airspace for aircraft operating in the vicinity of Angel Fire Airport, Angel Fire, NM.

DATES: Comments must be received on or before October 29, 2001.

ADDRESSES: Send comments on the proposal in triplicate to Manager, Airspace Branch, Air Traffic Division, Federal Aviation Administration, Southwest Region, Docket No. 2001–ASW–13, Fort Worth, TX 76193–0520. The official docket may be examined in the Office of the Regional Counsel, Southwest Region, Federal Aviation Administration, 2601 Meacham Boulevard, Fort Worth, TX, between 9 a.m. and 3 p.m., Monday through Friday, except Federal holidays. An informal docket may also be examined during normal business hours at the Airspace Branch, Air Traffic Division, Federal Aviation Administration, Southwest Region, 2601 Meacham Boulevard, Fort Worth, TX.

FOR FURTHER INFORMATION CONTACT: Donald J. Day, Airspace Branch, Air Traffic Division, Federal Aviation Administration, Southwest Region, Fort Worth, TX 76193–0520; telephone: (817) 222–5593.

SUPPLEMENTARY INFORMATION:

Comments Invited

Interested parties are invited to participate in this proposed rulemaking by submitting such written data, views, or arguments, as they may desire. Comments that provide the factual basis supporting the views and suggestions presented are particularly helpful in developing reasoned regulatory decisions on the proposal. Comments are specifically invited on the overall regulatory, aeronautical, economic, environmental, and energy-related aspects of the proposal. Communications should identify the airspace docket number and be submitted in triplicate to the address listed under the caption **ADDRESSES**. Commenters wishing the FAA to acknowledge receipt of their comments on this proposal must submit, with those comments, a self-addressed, stamped, postcard containing the following statement: ''Comments to Airspace Docket No. 2001–ASW–13.'' The postcard will be date and time stamped and returned to the commenter. All communications received on or before the specified closing date for comments will be considered before taking action on the proposed rule. The proposal contained in this action may be changed in the light of comments received. All comments submitted will be available for examination in the Office of the Regional Counsel, Southwest Region Federal Aviation Administration, 2601 Meacham Boulevard, Fort Worth, TX, both before and after the closing date for comments. A report summarizing each substantive public contact with FAA personnel concerned with this rulemaking will be filed in the docket.

Availability of NPRM's

Any person may obtain a copy of this Notice of Proposed Rulemaking (NPRM) by submitting a request to the Operations Branch, Air Traffic Division, Federal Aviation Administration, Southwest Region, Fort Worth, TX 76193–0520. Communications must identify the notice number of this NPRM. Persons interested in being placed on a mailing list for future NPRM's should also request a copy of Advisory Circular No. 11–2A that describes the application procedure.

The Proposal

The FAA is considering an amendment to 14 CFR part 71 to establish Class E airspace at Angel Fire Airport, Angel Fire, NM. The development of a RNAV GPS SIAP to Angel Fire Airport, Angel Fire, NM, has made this rule necessary. The intended effect of this proposal is to provide adequate controlled airspace for aircraft operating in the vicinity of Angel Fire Airport, Angel Fire, NM.

The coordinates for this airspace docket are based on North American Datum 83. Designated Class E airspace areas are published in Paragraph 6005 of FAA Order 7400.9H, *Airspace Designations and Reporting Points*, dated September 1, 2000, and effective September 16, 2000, which is incorporated by reference in 14 CFR § 71.1. The Class E airspace designation listed in this document would be published subsequently in the order.

Further, the FAA has determined that this proposed regulation only involves an established body of technical regulations for which frequent and routine amendments are necessary to keep them operationally current. Therefore, this proposed regulation—(1) is not a ''significant regulatory action'' under Executive Order 12866; (2) is not a ''significant rule'' under DOT Regulatory Policies and Procedures (44 FR 11034; February 26, 1979); and (3) does not warrant preparation of a Regulatory Evaluation as the anticipated impact is so minimal. Since this is a routine matter that will only affect air traffic procedures and air navigation, it is certified that this proposed rule will not have a significant economic impact

on a substantial number of small entities under the criteria of the Regulatory Flexibility Act.

List of Subjects in 14 CFR Part 71

Airspace, Incorporation by reference, Navigation (air).

The Proposed Amendment

In consideration of the foregoing, the Federal Aviation Administration proposes to amend 14 CFR part 71 as follows:

PART 71—DESIGNATION OF CLASS A, CLASS B, CLASS C, CLASS E, AND CLASS E AIRSPACE AREAS; AIRWAYS; ROUTES; AND REPORTING POINTS

1. The authority citation for 14 CFR part 71 continues to read as follows:

Authority: 49 U.S.C. 106(g), 40103, 40113, 40120; E.O. 10854; 24 FR 9565, 3 CFR, 1959–1963 Comp., p. 389.

§ 71.1 [Amended]

2. The incorporation by reference in 14 CFR 71.1 of the Federal Aviation Administration Order 7400.9H, *Airspace Designations and Reporting Points*, dated September 1, 2000, and effective September 16, 2000, is amended as follows:

Paragraph 6005: Class E airspace areas extending upward from 700 feet or more above the surface of the earth.

* * * * *

ASW NM E5 Angel Fire Airport, Angel Fire, NM [New]

Angel Fire Airport, NM

(Lat. 36°25′21″N., long. 105°17′21″W.)

That airspace extending upward from 700 feet above the surface within a 7.5-mile radius of Angel Fire Airport and within 2 miles either side of the 005° bearing from the airport extending form the 7.5-mile radius to 11.1 miles north of the airport.

* * * * *

Issued in Fort Worth, TX on August 21, 2001.

Albert L. Viselli,

Acting Manager, Air Traffic Division, Southwest Region.

[FR Doc. 01–21825 Filed 8–28–01; 8:45 am]

BILLING CODE 4910–13–M

ENVIRONMENTAL PROTECTION AGENCY

40 CFR Part 52

[TN–232–200118(b); FRL–7044–3]

Approval and Promulgation of Implementation Plans: State of Tennessee

AGENCY: Environmental Protection Agency (EPA).

ACTION: Proposed rule.

SUMMARY: The EPA is approving a revision to the State of Tennessee's rules submitted on February 14, 2000. The State of Tennessee is amending Chapter 1200–3–22—Lead Emissions Standards to require EPA approval of changes to Reasonably Available Control Technology (RACT) emission levels in permits for lead sources. In the Final Rules Section of this **Federal Register**, the EPA is approving the State's SIP revision as a direct final rule without prior proposal because the Agency views this as a noncontroversial submittal and anticipates no adverse comments. A detailed rationale for the approval is set forth in the direct final rule. If no adverse comments are received in response to this action, no further activity is contemplated. If EPA receives adverse comments, the direct final rule will be withdrawn and all public comments received will be addressed in a subsequent final rule based on this proposed rule. The EPA will not institute a second comment period on this document. Any parties interested in commenting on this document should do so at this time.

DATES: Written comments must be received on or before September 28, 2001.

ADDRESSES: Written comments should be addressed to Kimberly Bingham, at the EPA Regional Office listed below. The interested persons wanting to examine these documents should make an appointment with the appropriate office at least 24 hours before the visiting day. Copies of the documents relative to this action are available for public inspection during normal business hours at the following locations.

U.S. Environmental Protection Agency, Region 4, Atlanta Federal Center, Air, Pesticides, and Toxics Management Division, 61 Forsyth Street, Atlanta, Georgia 30303–3104. Tennessee Department of Environment and Conservation, Division of Air Pollution Control, 9th Floor L&C Annex, 401 Church Street, Nashville, Tennessee 37243–1531.

FOR FURTHER INFORMATION CONTACT: Kimberly Bingham of the EPA Region 4, Air Planning Branch at (404) 562–9038 and at the above address.

SUPPLEMENTARY INFORMATION: For additional information see the direct final rule which is published in the Final Rules section of this **Federal Register**.

Dated: July 24, 2001.

Russell Wright,

Acting Regional Administrator, Region 4.

[FR Doc. 01–21701 Filed 8–28–01; 8:45 am]

BILLING CODE 6560–50–P

ENVIRONMENTAL PROTECTION AGENCY

40 CFR Parts 152 and 156

[OPP–250130; FRL–6750–8]

RIN 2070–AD14

Pesticide Labeling and Other Regulatory Revisions; Notification to the Secretary of Agriculture

AGENCY: Environmental Protection Agency (EPA).

ACTION: Notification to the Secretary of Agriculture.

SUMMARY: This document notifies the public that the Administrator of EPA has forwarded to the Secretary of Agriculture a draft final rule under section 25(a) of the Federal Insecticide, Fungicide, and Rodenticide Act (FIFRA). The draft final rule accomplishes a number of minor revisions to pesticide labeling and program regulations. These revisions reformat and update hazard labeling for clarity, interpret provisions of FIFRA as they apply to nitrogen stabilizers, and codify certain exclusions and exemptions for chemical sterilants.

FOR FURTHER INFORMATION CONTACT: By mail: Jean M. Frane, Field and External Affairs Division 7506C, Office of Pesticide Programs, Environmental Protection Agency, 1200 Pennsylvania Ave., NW., Washington DC 20460; telephone number: 703–305–5944; e-mail address: frane.jean@epa.gov.

SUPPLEMENTARY INFORMATION:

I. General Information

A. Does this Action Apply to Me?

You may be potentially affected by this action if you are a pesticide registrant or producer. Potentially affected categories and entities may include, but are not limited to:

Categories	NAICS codes	Examples of potentially affected entities
Producers	32532	Pesticide producers
	32531	Nitrogen stabilizer producers
	32561	Antimicrobial producers
Wholesalers	42269	Antimicrobial products
	42291	Pesticide products

This listing is not exhaustive, but rather provides a guide for readers regarding entities likely to be affected by this action. Other types of entities not listed in the table could also be affected. The North American Industrial Classification System (NAICS) codes have been provided to assist you and others in determining whether or not this action might apply to certain entities. If you have questions regarding the applicability of this action to a particular entity, consult the person listed under **FOR FURTHER INFORMATION CONTACT**.

B. How Can I Get Additional Information, Including Copies of this Document and Other Related Documents?

1. *Electronically*. You may obtain electronic copies of this document, and certain other related documents that might be available electronically, from the EPA Internet Home Page at http://www.epa.gov/. To access this document, on the Home Page select ''Laws and Regulations, '' ''Regulations and Proposed Rules,'' and then look up the entry for this document under the ''**Federal Register** —Environmental Documents.'' You can also go directly to the **Federal Register** listings at http://www.epa.gov/fedrgstr/.

2. *In person.* The Agency has extablished an official record for this action under docket control number OPP–250130. The official record consists of the documents specifically referenced in this action, and other information related to this action, including any information claimed as Confidential Business Information (CBI). This official record includes the ducuments that are physically located in the docket, as well as the documents that are referenced in those documents. The public version of the offcial record does not include any information claimed as CBI. The public version of the official record, which includes printed, paper versions of any electronic comments submitted during an applicable comment period is available for inspection in the Public Information and Records Integrity Branch (PIRIB), Rm. 119, Crystal Mall #2, 1921 Jefferson Davis Hwy., Arlington, VA, from 8:30 a.m. to 4 p.m., Monday through Friday, excluding legal holidays. The PIRIB telephone number is (703) 305–5805.

II. What Action is EPA Taking?

Section 25(a)(2) of FIFRA provides that the Administrator must provide the Secretary of Agriculture with a copy of any regulation at least 30 days before signing it for publication in the **Federal Register**. The draft final rule is not available to the public until after it has been signed by EPA. If the Secretary comments in writing regarding the draft final rule within 15 days after receiving it, the Administrator shall include in the final rule when published in the **Federal Register** the comments of the Secretary and the Administrator's response to those comments. If the Secretary does not comment in writing within 15 days after receiving the draft final rule, the Administrator may sign the final rule for publication in the **Federal Register** anytime after the 15–day period.

III. Do Any Regulatory Assessment Requirements Apply to this Notification?

No. This document is not a rule, merely a notification of submission to the Secretary of Agriculture. As such, none of the regulatory assessment requirements apply to this document.

IV. Will EPA Submit this Notification to Congress and the Comptroller General?

No. This action is not a rule for purposes of the Congressional Review Act (CRA), 5 U.S.C. 804(3), and will not be submitted to Congress and the Comptroller General. EPA will submit the final rule to Congress and the Comptroller General as required by the CRA.

List of Subjects in Parts 152 and 156

Environmental Protection, Administrative practice and procedure, Labeling, Occupational safety and health, Pesticides and pests, Reporting and recordkeeping requirements

Dated: August 16, 2001.

Marcia E. Mulkey

Director, Office of Pesticide Programs.

[FR Doc. 01–21708 Filed 8–28–00]

BILLING CODE 6560–50–S

DEPARTMENT OF THE INTERIOR

Fish and Wildlife Service

50 CFR Part 17

RIN 1018–AH80

Endangered and Threatened Wildlife and Plants; Notice of Public Hearings on the Proposed Rule To Establish Sixteen Additional Manatee Protection Areas in Florida

AGENCY: Fish and Wildlife Service, Interior.

ACTION: Proposed rule; notice of public hearings.

SUMMARY: We, the Fish and Wildlife Service, give notice that we are holding public hearings on the proposed rule to establish sixteen additional manatee protection areas in Florida. We invite all interested parties to submit comments on this proposal.

DATES: We will hold public hearings from 7 to 9 p.m. on Monday, September 10, 2001, in Crystal River, Florida; Tuesday, September 11, 2001, in Clearwater, Florida; Wednesday, September 12, 2001, in Venice, Florida; and Thursday, September 13, 2001, in Melbourne, Florida. The comment period will close on October 9, 2001. We will consider any comments received by the closing date in the final decision on this proposal.

ADDRESSES: We will hold the public hearings at the following locations:

- Crystal River at the Plantation Inn and Conference Center, Magnolia Room, 9301 W. Fort Island Trail, Crystal River, FL;
- Clearwater at the Harborview Convention Center Clearwater Room, 300 Cleveland Ave., Clearwater, FL;
- Venice at the Holiday Inn Banquet Room, 455 N. U.S. 41 Bypass, Venice, FL;
- Melbourne at the Radisson Hotel & Conference Center, Oak Ballroom, 3101 North Hwy. A1A, Melbourne, FL.

You may submit written comments and materials concerning the proposal at the hearings or send them directly to the Field Supervisor, U.S. Fish and Wildlife Service, Jacksonville Field Office, U.S. Fish and Wildlife Service, 6620 Southpoint Drive, South, Suite 310, Jacksonville, Florida 32216. You may also hand-deliver written comments to our Jacksonville Field Office, at the above address, or fax your comments to 904/232–2404. Additionally, you may send comments by electronic mail (e-mail) to *fw4_es_jacksonville@fws.gov.*

Comments and materials received, as well as supporting documentation used

in the preparation of this proposed rule, will be available for public inspection, by appointment, during normal business hours from 8:00 a.m. to 4:30 p.m., at the above address. You may obtain copies of the proposed rule and draft environmental assessment from the above address or by calling 904/232–2580, or from our website at *http://northflorida.fws.gov.*

FOR FURTHER INFORMATION CONTACT: David Hankla, Peter Benjamin, or Cameron Shaw (see **ADDRESSES** section), telephone 904/232–2580; or visit our website at *http://northflorida.fws.gov.*

SUPPLEMENTARY INFORMATION: We published a proposed rule to establish 16 additional manatee protection areas in Florida in the **Federal Register** on August 10, 2001 (66 FR 42318). We are proposing this action under the Endangered Species Act of 1973, as amended (16 U.S.C. 1531 *et seq.*) (ESA), and the Marine Mammal Protection Act of 1972, as amended (16 U.S.C. 1361–1407) (MMPA), to further recovery of the Florida manatee (*Trichechus manatus latirostris*) through a reduction in the level of take. In evaluating the need for additional manatee protection areas, we considered the needs of the manatee at an ecosystem level with the goal of ensuring that adequate, protected areas are available throughout peninsular Florida to satisfy the biological requirements of the species, with a view toward the manatee's recovery. We are proposing to designate four areas in Hillsborough, Pinellas, and Citrus Counties, as manatee sanctuaries in which all waterborne activities would be prohibited, with an exception for residents. The remaining 12 areas, located in Pinellas, Sarasota, Charlotte, Desoto, Lee, and Brevard Counties, would be designated as manatee refuges in which certain waterborne activities would be prohibited or regulated. We also announced the availability of a draft environmental assessment for this action.

We announced the date, time and location of the public hearing in Melbourne with the notice of the proposed rule. We stated that additional public hearings would be held at dates, times, and sites to be determined. This notice provides information regarding those additional hearings.

Public hearings are designed to gather relevant information that the public may have that we should consider in our rule-making. During the hearing, we will present information about the proposed action. We invite the public to submit information and comments either at the hearings or in writing.

We may have to limit the time allotted for oral statements, if the number of people who wish to comment necessitates such a limitation. We encourage persons wishing to comment at the hearings to provide a written copy of their statement at the start of the hearing. There is no limit on the length of written comments. Persons may also send written comments to our office in the **ADDRESSES** section at any time during the open comment period, which closes on October 9, 2001. We will give equal consideration to oral and written comments. We are publishing legal notices announcing the date, time, and location of the hearings in newspapers, concurrently with this **Federal Register** notice.

Author: The primary author of this notice is Cameron Shaw (see **ADDRESSES** section).

Authority: The authority for this action is the Endangered Species Act of 1973 (16 U.S.C. 1531 *et seq.*), and the Marine Mammal Protection Act of 1972, as amended (16 U.S.C. 1361–1407).

Dated: August 20, 2001.

Thomas M. Riley,

Acting Regional Director, Fish and Wildlife Service.

[FR Doc. 01–21906 Filed 8–28–01; 8:45 am]

BILLING CODE 4310–55–P

Notices

Federal Register

Vol. 66, No. 168

Wednesday, August 29, 2001

This section of the FEDERAL REGISTER contains documents other than rules or proposed rules that are applicable to the public. Notices of hearings and investigations, committee meetings, agency decisions and rulings, delegations of authority, filing of petitions and applications and agency statements of organization and functions are examples of documents appearing in this section.

DEPARTMENT OF COMMERCE

International Trade Administration

[A–580–601]

Top-of-the-Stove Stainless Steel Cooking Ware From the Republic of Korea: Final Results and Rescission, in Part, of Antidumping Duty Administrative Review

AGENCY: Import Administration, International Trade Administration, Department of Commerce.

ACTION: Notice of Final Results of Antidumping Duty Administrative Review.

SUMMARY: On February 23, 2001, the Department of Commerce (the Department) published the preliminary results of administrative review of the antidumping duty order on top-of-the-stove stainless steel cooking ware (cookware) from the Republic of Korea. The merchandise covered by this order is cookware from the Republic of Korea. The review covers twenty-seven manufacturers of subject merchandise: Daelim Trading Co., Ltd. (Daelim), Dong Won Metal Co., Ltd. (Dong Won), Chefline Corporation (Chefline), Sam Yeung Ind. Co., Ltd. (Samyeung), Namyang Kitchenflower Co., Ltd. (Namyang), Kyung-Dong Industrial Co., Ltd. (Kyung-Dong), Ssang Yong Ind. Co., Ltd. (Ssangyong), O. Bok Stainless Steel Co., Ltd. (O. Bok), Dong Hwa Stainless Steel Co., Ltd. (Dong Hwa), Il Shin Co., Ltd. (Il Shin), Hai Dong Stainless Steel Ind. Co., Ltd. (Hai Dong), Han Il Stainless Steel Ind. Co., Ltd. (Han Il), Bae Chin Metal Ind. Co. (Bae Chin), East One Co., Ltd. (East One), Charming Art Co., Ltd. (Charming Art), Poong Kang Ind. Co., Ltd. (Poong Kang), Won Jin Ind. Co., Ltd. (Won Jin), Wonkwang Inc. (Wonkwang), Sungjin International Inc. (Sungjin), Sae Kwang Aluminum Co., Ltd. (Sae Kwang), Woosung Co., Ltd., (Woosung), Hanil Stainless Steel Ind. Co., Ltd.,[1] Seshin Co., Ltd. (Seshin), Pionix Corporation (Pionix), East West Trading Korea, Ltd. (East West), Clad Co., Ltd. (Clad), and B.Y. Enterprise, Ltd (B.Y.). The period of review (POR) is January 1, 1999, through December 31, 1999. Based on our analysis of the comments received, we have made changes in the margin calculations. Therefore, the final results differ from the preliminary results. The final weighted-average dumping margins for the reviewed firms are listed below in the section entitled ''Final Results of the Review.''

EFFECTIVE DATE: August 29, 2001.

FOR FURTHER INFORMATION CONTACT: Paige Rivas or Ron Trentham, AD/CVD Enforcement, Office 4, Group II, Import Administration, International Trade Administration, U.S. Department of Commerce, 14th Street and Constitution Ave., N.W., Washington, D.C. 20230; telephone: (202) 482–0651 or 482–6320, respectively.

SUPPLEMENTARY INFORMATION:

The Applicable Statute

Unless otherwise indicated, all citations to the Tariff Act of 1930, as amended (the Act), are references to the provisions effective January 1, 1995, the effective date of the amendments made to the Act by the Uruguay Round Agreements Act (URAA). In addition, unless otherwise indicated, all citations to the Department's regulations are to 19 CFR part 351 (2000).

Background

On February 23, 2001, the Department published the preliminary results of the 1999 administrative review of the antidumping duty order on cookware from Korea. *See Top-of-the-Stove Stainless Steel Cooking Ware from Korea: Preliminary Results and Rescission, in Part, of Antidumping Duty Administrative Review,* 66 FR 11259 (February 23, 2001) (*Preliminary Results*). We invited parties to comment on our preliminary results of review. On March 26, 2001, we received case briefs from the Stainless Steel Cookware Committee (the petitioner) and Dong Won and Daelim (the respondents). On April 2, 2001, we received rebuttal briefs from the petitioner and respondents. The Department has conducted this administrative review in accordance with section 751 of the Act.

Scope of Review

The merchandise subject to this antidumping order is top-of-the-stove stainless steel cookware from Korea. The subject merchandise is all non-electric cooking ware of stainless steel which may have one or more layers of aluminum, copper or carbon steel for more even heat distribution. The subject merchandise includes skillets, frying pans, omelette pans, saucepans, double boilers, stock pots, dutch ovens, casseroles, steamers, and other stainless steel vessels, all for cooking on stove top burners, except tea kettles and fish poachers. Excluded from the scope of the order are stainless steel oven ware and stainless steel kitchen ware. The subject merchandise is currently classifiable under Harmonized Tariff Schedule (HTS) item numbers 7323.93.00 and 9604.00.00. The HTS item numbers are provided for convenience and Customs purposes only. The written description remains dispositive.

The Department has issued several scope clarifications for this order. The Department found that certain stainless steel pasta and steamer inserts (63 FR 41545, August 4, 1998), certain stainless steel eight-cup coffee percolators (58 FR 11209, February 24, 1993), and certain stainless steel stock pots and covers are within the scope of the order (57 FR 57420, December 4, 1992). Moreover, as a result of a changed circumstances review, the Department revoked the order on Korea in part with respect to certain stainless steel camping ware (1) made of single-ply stainless steel having a thickness no greater than 6.0 millimeters; and (2) consisting of 1.0, 1.5, and 2.0 quart saucepans without handles and with lids that also serve as fry pans (62 FR 3662, January 24, 1997).

Partial Recession of Review

In our preliminary results, we determined that the following companies made no shipments of subject merchandise to the United States during the POR: Sugjin, O. Bok, Won Jin, Hai Dong, Pionix, Seshin, Dong Hwa, Wonkwang, and Charming Art. Our review of Customs import data indicated that there were no entries of subject merchandise made by these manufacturers/exporters during the POR. *See Preliminary Results*. Because

[1] Same company as Han Il Stainless Ind. Co., Ltd. listed above.

we received no comments from interested parties on our preliminary decision to rescind the review with respect to the above companies, we have determined that no changes to our decision to rescind are warranted for purposes of these final results. Therefore, we are rescinding this review with respect to these manufacturers/exporters.

On March 17, 2000, counsel for Chefline requested that the Department rescind the review with respect to Woosung. Woosung is Chefline's original corporate name which was changed to Chefline in March 1996. Since Chefline submitted uncontested evidence on the record to support its claim and petitioner did not object to Chefline's request for recission with regard to Woosung, we preliminarily rescinded the review with respect to Woosung. *See Preliminary Results*. Because we received no comments from interested parties on our preliminary decision to rescind the review with respect to Woosung, we have determined that no changes to our decision to rescind are warranted for purposes of these final results. Therefore, we are rescinding this review with respect to Woosung.

Facts Available (FA)

In accordance with section 776 of the Act, we have determined that the use of adverse FA is warranted for 14 companies for these final results of review.

1. Application of FA

Section 776(a) of the Act provides that, if an interested party withholds information that has been requested by the Department, fails to provide such information in a timely manner or in the form or manner requested, significantly impedes a proceeding under the antidumping statute, or provides information which cannot be verified, the Department shall use, subject to sections 782(d) and (e), facts otherwise available in reaching the applicable determination. In this review, as described in detail below, the above-referenced companies failed to provide the necessary information in the form and manner requested, and, in some instances, the submitted information could not be verified. Thus, pursuant to section 776(a) of the Act, the Department is required to apply, subject to section 782(d), facts otherwise available.

Section 782(d) of the Act provides that, if the Department determines that a response to a request for information does not comply with the request, the Department will inform the person submitting the response of the nature of the deficiency and shall, to the extent practicable, provide that person the opportunity to remedy or explain the deficiency. If that person submits further information that continues to be unsatisfactory, or this information is not submitted within the applicable time limits, the Department may, subject to section 782(e), disregard all or part of the original and subsequent responses, as appropriate.

Pursuant to section 782(e) of the Act, notwithstanding the Department's determination that the submitted information is ''deficient'' under section 782(d) of the Act, the Department shall not decline to consider such information if all of the following requirements are satisfied: (1) The information is submitted by the established deadline; (2) the information can be verified; (3) the information is not so incomplete that it cannot serve as a reliable basis for reaching the applicable determination; (4) the interested party has demonstrated that it acted to the best of its ability; and (5) the information can be used without undue difficulties.

The Department has concluded that, because B.Y., Clad , Sae Kwang, East One, East West, Bae Chin, Han Il, Il Shin, Kyung-Dong, Poong Kang, Namyang, Chefline, Sangyong and Samyeung failed to respond to the Department's questionnaire, a determination based on total FA is warranted for these companies. *See* the *Preliminary Results* for a detailed discussion of this analysis.

2. Selection of FA

In selecting from among the facts otherwise available, section 776(b) of the Act authorizes the Department to use an adverse inference if the Department finds that an interested party failed to cooperate by not acting to the best of its ability to comply with the request for information. *See, e.g., Certain Welded Carbon Steel Pipes and Tubes From Thailand: Final Results of Antidumping Duty Administrative Review*, 62 FR 53808, 53819–20 (October 16, 1997). In the *Preliminary Results*, the Department determined that because B.Y., Clad, Sae Kwang, East One, East West, Bae Chin, Han Il, Il Shin, Kyung-Dong, Poong Kang, Namyang, and Chefline wholly failed to respond to the Department's questionnaire, they did not act to the best of their respective ability, and therefore an adverse inference is warranted in applying FA for these companies. Further, the Department determined that because Sangyong failed to respond to sections B and C of the Department's questionnaire and Samyeung failed to respond to section D of the Department's questionnaire, these companies failed to act to the best of their respective abilities, and therefore an adverse inference is warranted in applying FA for these companies.

For the final results, no interested party comments were submitted regarding this issue and we continue to find that the failure of the 14 manufacturers/exporters listed above either to respond to the Department's questionnaire in this review, either in whole or in part, demonstrates that these entities failed to cooperate by not acting to the best of their ability. Thus, consistent with the Department's practice in cases where a respondent fails to respond to the Department's questionnaire, in selecting FA for the 14 manufacturers/exporters listed above an adverse inference is warranted. For a discussion of the application of an adverse inference in this case, *see Preliminary Results*, 66 FR at 11262.

As adverse FA, we are assigning B.Y., Clad, Sae Kwang, East One, East West, Bae Chin, Han Il, Il Shin, Kyung-Dong, Poong Kang, Namyang, Chefline, Sangyong and Samyeung the highest rate calculated for any respondent in any segment of this proceeding. This rate is 31.23 percent. *See Final Determination of Sales at Less Than Fair Value; Certain Stainless Steel Cookware from Korea,* 51 FR 42873 (November 26, 1986) (*Final LTFV Determination*). For a discussion on corroboration of the 31.23 percent FA rate, *see* Memorandum on Application of Facts Available for Sam Yeung Ind. Co., Ltd. (Samyeung) in the Preliminary Results of the 1999 Administrative Review, dated January 30, 2001. Also, for a general discussion of the relevance of the selected FA rate for all non-cooperating respondents, *see Preliminary Results*, 66 FR at 11263–11264.

Analysis of Comments Received

All issues raised in the case and rebuttal briefs by parties to this administrative review are addressed in the ''Issues and Decision Memorandum'' (Decision Memorandum) from Bernard T. Carreau, Deputy Assistant Secretary, Import Administration, to Faryar Shirzad, Assistant Secretary for Import Administration, dated August 22, 2001, which is hereby adopted by this notice. A list of the issues which parties have raised and to which we have responded, all of which are in the Decision Memorandum, is attached to this notice as an Appendix. Parties can find a complete discussion of all issues raised in this review and the corresponding

recommendations in this public memorandum which is on file in the Central Records Unit, room B–099 of the main Department building. In addition, a complete version of the Decision Memorandum can be accessed directly on the Web at http://ia.ita.doc.gov/frn/summary/list.htm. The paper copy and electronic version of the Decision Memorandum are identical in content.

Changes Since the Preliminary Results

Based on our analysis of comments received, we have made certain changes in the margin calculations. These changes are discussed in the relevant sections of the Decision Memorandum.

Final Results of Review

We determine that the following percentage weighted-average margins exist for the period January 1, 1999 through, December 31, 1999:

Manufacturer/exporter	Margin (percent)
Dong Won Metal Co., Ltd	16.03
Dae-Lim Trading Co., Ltd	1.67
Sam Yeung Ind. Co., Ltd	31.23
SsangYong Ind. Co., Ltd	31.23
Chefline Corporation	31.23
B.Y Enterprise, Ltd	31.23
Clad Co., Ltd	31.23
Sae Skwang Aluminum Co., Ltd	31.23
East One Co., Ltd	31.23
East West Trading Korea, Ltd	31.23
Bae Chin Metal Ind. Co	31.23
Han Il Stainless Steel Ind. Co., Ltd	31.23
Il Shin Co., Ltd	31.23
Kyung-Dong Industrial Co., Ltd	31.23
Poong Kang Ind. Co., Ltd	31.23
Namyang Kitchen Flower Co., Ltd	31.23

Assessment

The Department shall determine, and the U.S. Customs Service shall assess, antidumping duties on all appropriate entries. The Department will issue appraisement instructions directly to the Customs Service. In accordance with 19 CFR 351.212(b)(1), we have calculated for Daelim and Dong Won importer-specific assessment rates based on the ratio of the total amount of antidumping duties calculated for the importer-specific sales to the total entered value of the same sales. For all other respondents, we based the assessment rate on the facts available margin percentage. Where the importer-specific assessment rate is above *de minimis,* we will instruct Customs to assess antidumping duties on that importer's entries of subject merchandise.

Cash Deposit Requirements

The following deposit requirements will be effective upon publication of this notice of final results of these administrative reviews for all shipments of top-of-stove stainless steel cooking ware from Korea entered, or withdrawn from warehouse, for consumption on or after publication date of the final results of these administrative reviews, as provided by section 751(a)(1) of the Act: (1) The cash deposit rate for the reviewed companies will be the rate established in the final results of this administrative review, except if the rate is less than 0.5 percent *ad valorem* and, therefore, *de minimis,* no cash deposit will be required; (2) for exporters not covered in this review, but covered in the original LTFV investigation or a previous review, the cash deposit rate will continue to be the company-specific rate published in the most recent period; (3) if the exporter is not a firm covered in this review, a previous review, or the original LTFV investigation, but the manufacturer is, the cash deposit rate will be the rate established for the most recent period for the manufacturer of the merchandise; and (4) if neither the exporter nor the manufacturer is a firm covered in this or any previous reviews or the LTFV investigation, the cash deposit rate will be 8.10 percent, the ''all-others'' rate established in the LTFV investigation. These deposit requirements, when imposed, shall remain in effect until publication of the final results of the next administrative review.

Notification

This notice serves as a final reminder to importers of their responsibility under 19 CFR 351.402(f) to file a certificate regarding the reimbursement of antidumping duties prior to liquidation of the relevant entries during this review period. Failure to comply with this requirement could result in the Secretary's presumption that reimbursement of antidumping duties occurred and the subsequent assessment of doubled antidumping duties.

This notice also serves as a reminder to parties subject to administrative protective order (APO) of their responsibility concerning the disposition of proprietary information disclosed under APO in accordance with 19 CFR 351.305. Timely notification of return/destruction of APO materials or conversion to judicial protective order is hereby requested. Failure to comply with the regulations and the terms of an APO is a sanctionable violation.

We are issuing and publishing this determination and notice in accordance with sections 751(a)(1) and 777(i) of the Act.

Dated: August 21, 2001.

Joseph A. Spetrini,

Acting Assistant Secretary for Import Administration.

Appendix—Issues in Decision Memorandum

Comments and Responses

1. Model Match Methodology.
2. Circumstance of Sale Adjustment for Commissions Incurred on Dong Won Sales in Canada.
3. Home Market Inland Freight Adjustment for Daelim.
4. Constructed Value Selling Expenses for Dong Won and Daelim.
5. Imputed Inventory Carrying Costs for Dong Won and Daelim.
6. Weighted-Average Third-Country Expenses for Dong Won.
7. Conversion of Third-Country Expenses from Korean Won to U.S. Dollars for Dong Won.
8. Matching Factors with Respect to Don Wong's Products.
9. Ministerial Error in Daelim's Margin Program Regarding Net interest Expense for the Calculation of Constructed Value.

[FR Doc. 01–21834 Filed 8–28–01; 8:45 am]

BILLING CODE 3510–DS–P

DEPARTMENT OF COMMERCE

International Trade Administration

[A–549–502]

Certain Welded Carbon Steel Pipes and Tubes From Thailand; Notice of Amended Final Results of Antidumping Duty Administrative Review in Accordance With Final Court Decision

AGENCY: Import Administration, International Trade Administration, Department of Commerce.

ACTION: Notice of Amended Final Results of Administrative Review in Accordance with Final Court Decision on Certain Welded Carbon Steel Pipes and Tubes from Thailand.

SUMMARY: On March 22, 2001, the U.S. Court of International Trade (CIT) affirmed the Department of Commerce's (the Department's) remand determination of the final results of the antidumping duty administrative review of Certain Welded Carbon Steel Pipes and Tubes from Thailand for the period March 1, 1997 to February 28, 1998, and entered a judgement order. As no further appeals have been filed and

there is now a final and conclusive court decision in this action, we are amending our final results.

EFFECTIVE DATE: August 29, 2001.

FOR FURTHER INFORMATION CONTACT: Javier Barrientos, AD/CVD Enforcement Group III, Office VII, Room 7866, Import Administration, International Trade Administration, U.S. Department of Commerce, 14th Street and Constitution Avenue, NW, Washington, DC 20230; telephone: (202) 482–2243.

SUPPLEMENTARY INFORMATION:

Applicable Statute and Regulations

Unless otherwise indicated, all citations to the Tariff Act of 1930, as amended (''the Act''), are references to the provisions effective January 1, 1995, the effective date of the Uruguay Round Agreements Act. In addition, unless otherwise indicated, all citations to the Department's regulations are to the regulations codified at 19 CFR part 351 (2000).

Background

On October 21, 1999, the Department published its final results for the administrative review of Certain Welded Carbon Steel Pipes and Tubes from Thailand for the period March 1, 1997 through February 28, 1998. *See Certain Welded Carbon Steel Pipes and Tubes From Thailand: Final Results of Antidumping Duty Administrative Review,* 64 FR 56759 (October 21, 1999) *(Final Results).*

In the *Final Results,* the Department used, as facts available, a simple average of respondent's, Saha Thai's, claimed invoice amounts for cash and guarantee-based duty drawback to calculate Saha Thai's duty drawback. The methodology applied in the *Final Results* increased the total amount of duty drawback claimed by respondent.

Following publication of the *Final Results,* Allied Tube and Conduit Corp., petitioner in this case, filed a lawsuit with the CIT challenging the Department's date of sale and duty drawback determinations in the *Final Results.*

On January 18, 2001, the CIT remanded the above-referenced proceeding to the Department for reconsideration of the following issue: (1) to explain why the Department's duty drawback methodology, which employed facts available, is consistent with the objectives of the facts available provision, 19 U.S.C. 1677e(a) (Section 776(a) of the Act), and accounts for gaps in respondent's information; or alternatively, to calculate a new duty drawback adjustment which is consistent with this objective. In its opinion, the CIT affirmed the Department's determination that respondent was entitled to a duty drawback adjustment to its export price, and also supported the Department's use of facts otherwise available in determining the appropriate adjustment. However, the CIT stated that the Department did not explain how its use of facts available corrects the problem of reliance on Saha Thai's claimed adjustment, *i.e.,* excessive drawback adjustment from inclusion of bank guarantee fees, and drawback adjustment exceeding the actual amounts rebated. *See Allied Tube and Conduit Corp.* v. *United States,* 132 F. Supp. 2d 1087 (CIT 2001).

As noted above, in the *Final Results,* the Department's use of a simple average in calculating a facts available duty drawback amount resulted in an increase in the total amount of duty drawback claimed by the respondent. The Department had intended through the use of this approach, to apply neutral facts available by decreasing those duty drawback amounts that were above the calculated average. However, because the invoice tonnage amounts were not taken into account in the calculation of the average, the Department's methodology resulted in an overall increase in the total duty drawback amount claimed by the respondent.

Therefore, for the Draft Results of Redetermination, we reconsidered our methodology in accordance with the CIT's order and determined that the simple average methodology applied did not adequately function as a modified duty drawback adjustment for respondent. Thus, the Department recalculated the duty drawback amount to be applied to the relevant invoices by weight-averaging the reported cash and guarantee-based duty drawback amounts by invoice quantity in order to more appropriately apply facts available to this duty drawback calculation. This results in a weighted-average figure for duty drawback which is less than the previously-calculated figure. This methodology properly accounts for the tonnages in each invoice and results in a more appropriate application of facts available because the total duty drawback amount is not increased above that which the respondent reported. The methodology is consistent with the facts available provision because, although it need not be the ''best available information,'' Statement of Administrative Action at 869, reprinted in 1994 U.S.C.C.A.N. at 4198, based on evidence on the record the use of a weighted average, as opposed to a simple average, more appropriately accounts for the gap in respondent's information, thus promoting greater accuracy in the margin calculation.

On February 14, 2001, the Department issued its Draft Results of Redetermination to the plaintiff and defendant-intervenor for comment. Neither party submitted comments to the Department. Therefore, the Final Results of Redetermination were identical to the Draft Results of Redetermination.

On March 22, 2001, the CIT affirmed the Department's remand results, upholding the use of a weighted-average of the claimed duty drawback as facts available. *See Allied Tube and Conduit Corp.* v. *United States,* No. 99–11–00715, 2001 Ct. Intl. Trade LEXIS 40; Slip. Op. 01–03 (March 22, 2001).

We have recalculated the dumping margin for respondent based upon the changes set forth above.

Amendment to Final Results of Review

Because no further appeals have been filed and there is now a final and conclusive decision in the court proceeding, effective as of the publication date of this notice, we are amending the *Final Results* and establishing the following revised weight-averaged dumping margin:

Company	Amended Final Results 3/1/97–2/28/98
Saha Thai Steel Pipe Company, Ltd	9.84%

The ''All Others Rate'' was not affected by the Final Results of Redetermination and remains at 15.67 percent as determined in the LTFV investigation.

The Department has also revised the importer specific duty assessment rates (see *Final Results*) and will instruct the U.S. Customs Service (Customs) to assess these revised antidumping duties on all appropriate entries. The Department will issue appraisement instructions directly to Customs.

This notice is issued and published in accordance with section 751(a)(1) of the Act.

Dated: August 21, 2001.

Joseph A. Spetrini,

Acting Assistant Secretary for Import Administration.

[FR Doc. 01–21835 Filed 8–28–01; 8:45 am]

BILLING CODE 3510–DS–P

DEPARTMENT OF COMMERCE

National Oceanic and Atmospheric Administration

[Docket No. 010710173–1215–03; I.D. 050201A]

RIN 0648-AO91

Mid-Atlantic Fishery Management Council; Request for Research Proposals (RFP); Closing Date Extension

AGENCY: National Marine Fisheries Service (NMFS), National Oceanic and Atmospheric Administration (NOAA), Commerce.

ACTION: Closing date extension of notice of solicitation for applications.

SUMMARY: NMFS published a notice in the **Federal Register** on July 25, 2001, soliciting proposals for research projects. The notice described how the application and selection process for research projects to be funded by a set-aside from the Total Allowable Landings (TAL) of selected species will operate. This document extends the closing date for research proposals to no later than 5 p.m., EDT on September 14, 2001, in order to provide the fishing industry and academia ample opportunity to collaborate and apply for the research set-aside allocations.

DATES: The closing date for receipt of proposals or addenda to preexisting proposals is extended until September 14, 2001. All research proposals must be received no later than 5 p.m., EDT, on September 14, 2001, in the Northeast Regional Office (see **ADDRESSES**). Applications that are postmarked but not received by that time will not be accepted. Facsimile applications will not be accepted.

ADDRESSES: Proposals must be submitted to Patricia A. Kurkul, Regional Administrator, NMFS, Northeast Regional Office, 1 Blackburn Drive, Gloucester, MA 01930. Mark proposals ''Attention: Mid-Atlantic Research Proposals.''

Copies of the Standard Forms for submission of research proposals may be found on the Internet in a PDF (Portable Document Format) version at http://www.ofa.noaa.gov/grants/index.html under the title ''Grants Management Forms,'' or by contacting the Council office (see **FOR FURTHER INFORMATION CONTACT**).

FOR FURTHER INFORMATION CONTACT: Daniel Furlong, Executive Director, Mid-Atlantic Fishery Management Council, (302) 674–2331 or David Gouveia, Fishery Policy Analyst, NMFS, (978) 281–9280.

SUPPLEMENTARY INFORMATION: In the **Federal Register** issue of July 25, 2001 (66 FR 38636), a notice of request for proposals for research projects established a deadline for receipt of research proposals of August 24, 2001. The closing date for receipt of applications is hereby extended until September 14, 2001, in order to provide the fishing industry and academia ample opportunity to collaborate and apply for the research set-aside allocations. All applicants that have submitted proposals prior to the original closing date of August 24, 2001, will be allowed to modify their proposals by providing a supplement, addendum, or re-submission of their research proposal. Please refer to the July 25, 2001, **Federal Register** notice for further information on proposal requirements.

Dated: August 23, 2001.

John Oliver,

Acting Deputy Assistant Administrator for Fisheries National Marine Fisheries Service.

[FR Doc. 01–21830 Filed 8–24–01; 4:23 pm]

BILLING CODE 3510–22–S

DEPARTMENT OF EDUCATION

Submission for OMB Review; Comment Request

AGENCY: Department of Education.

SUMMARY: The Leader, Regulatory Information Management Group, Office of the Chief Information Officer invites comments on the submission for OMB review as required by the Paperwork Reduction Act of 1995.

DATES: Interested persons are invited to submit comments on or before September 28, 2001.

ADDRESSES: Written comments should be addressed to the Office of Information and Regulatory Affairs, Attention: Crystal Thomas, Desk Officer, Department of Education, Office of Management and Budget, 725 17th Street, NW., Room 10202, New Executive Office Building, Washington, DC 20503 or should be electronically mailed to the internet address CAThomas@omb.eop.gov.

SUPPLEMENTARY INFORMATION: Section 3506 of the Paperwork Reduction Act of 1995 (44 U.S.C. Chapter 35) requires that the Office of Management and Budget (OMB) provide interested Federal agencies and the public an early opportunity to comment on information collection requests. OMB may amend or waive the requirement for public consultation to the extent that public participation in the approval process would defeat the purpose of the information collection, violate State or Federal law, or substantially interfere with any agency's ability to perform its statutory obligations. The Leader, Regulatory Information Management Group, Office of the Chief Information Officer, publishes that notice containing proposed information collection requests prior to submission of these requests to OMB. Each proposed information collection, grouped by office, contains the following: (1) Type of review requested, e.g. new, revision, extension, existing or reinstatement; (2) Title; (3) Summary of the collection; (4) Description of the need for, and proposed use of, the information; (5) Respondents and frequency of collection; and (6) Reporting and/or Recordkeeping burden. OMB invites public comment.

Dated: August 23, 2001.

John Tressler,

Leader, Regulatory Information Management, Office of the Chief Information Officer.

Office of Postsecondary Education

Type of Review: Revision.

Title: Grant Application for the FIPSE Comprehensive Program.

Frequency: Annually.

Affected Public: Not-for-profit institutions; State, Local, or Tribal Gov't, SEAs or LEAs.

Reporting and Recordkeeping Hour Burden:

Responses: 1,650.

Burden Hours: 19,500.

Abstract: The Comprehensive Program is a discretionary grant award program of the Fund for the Improvement of Postsecondary Education (FIPSE). Applications are submitted in two stages-preliminary and final. The program supports innovative reform projects that hold promise as models for the resolution of important issues and problems in postsecondary education. Grants made under this program are expected to contribute new information in educational practice that can be shared with others. As its name suggests, the Comprehensive Program may support activities in any discipline, program, or student service. Nonprofit institutions and organization offering postsecondary education programs are eligible applicants. The Comprehensive Program has established a record of meaningful and lasting improvement to access and quality in postsecondary education.

This information collection is being submitted under the Streamlined Clearance Process for Discretionary Grant Information Collections (1890–0001). Therefore, the 30-day public comment period notice will be the only public comment notice published for this information collection.

Requests for copies of the proposed information collection request may be accessed from *http://edicsweb.ed.gov,* or should be addressed to Vivian Reese, Department of Education, 400 Maryland Avenue, SW, Room 4050, Regional Office Building 3, Washington, D.C. 20202–4651. Requests may also be electronically mailed to the internet address OCIO_RIMG@ed.gov or faxed to 202–708–9346. Please specify the complete title of the information collection when making your request.

Comments regarding burden and/or the collection activity requirements should be directed to Joseph Schubart at (202) 708–9266 or via his internet address Joe.Schubart@ed.gov. Individuals who use a telecommunications device for the deaf (TDD) may call the Federal Information Relay Service (FIRS) at 1–800–877–8339.

[FR Doc. 01–21769 Filed 8–28–01; 8:45 am]

BILLING CODE 4000–01–P

DEPARTMENT OF EDUCATION

Privacy Act of 1974; System of Records

AGENCY: Student Financial Assistance, Department of Education.

ACTION: Notice of a new system of records; correction.

SUMMARY: On May 30, 2001, we published in the **Federal Register** (66 FR 29420) a notice of a new system of records entitled ''Student Authentication Network Audit File.'' We recently discovered that we inadvertently numbered this system of records ''18–11–10.'' This notice corrects that number to read ''18–11–13.''

Correction

On page 29420, column one, under SUMMARY, and column three, the line before SYSTEM NAME, the number is corrected to read ''18–11–13.''

FOR FURTHER INFORMATION CONTACT: Neil Sattler, Office of the Chief Information Officer, U.S. Department of Education, Student Financial Assistance, 400 Maryland Avenue, SW., Portals Building, room 604, Washington, DC 20202–5132. Telephone: (202) 205–4348. If you use a telecommunications device for the deaf (TDD), you may call the Federal Information Relay Service (FIRS) at 1–800–877–8339.

Individuals with disabilities may obtain this document in an alternative format (e.g., Braille, large print, audiotape, or computer diskette) on request to the contact person listed in the preceding paragraph.

Electronic Access to This Document

You may view this document, as well as all other Department of Education documents published in the **Federal Register**, in text or Adobe Portable Document Format (PDF) on the Internet at the following site: *www.ed.gov/legislation/FedRegister.*

To use PDF you must have Adobe Acrobat Reader, which is available free at this site. If you have questions about using PDF, call the U.S. Government Printing Office (GPO), toll free, at 1–888–293–6498; or in the Washington, DC, area at (202) 512–1530.

Note: The official version of this document is the document published in the **Federal Register**. Free Internet access to the official edition of the **Federal Register** and the Code of Federal Regulations is available on GPO Access at: *http://www.access.gpo/nara/index.html/.*

Dated: August 23, 2001.

Greg Woods,

Chief Operating Officer, Student Financial Assistance.

[FR Doc. 01–21766 Filed 8–28–01; 8:45 am]

BILLING CODE 4001–01–U

DEPARTMENT OF ENERGY

Environmental Management Site-Specific Advisory Board, Paducah

AGENCY: Department of Energy (DOE).

ACTION: Notice of open meeting.

SUMMARY: This notice announces a meeting of the Environmental Management Site-Specific Advisory Board (EM SSAB), Paducah. The Federal Advisory Committee Act (Pub. L. 92–463, 86 Stat. 770) requires that public notice of these meetings be announced in the **Federal Register**.

DATES: Thursday, September 20, 2001, 5:30 p.m.–9:00 p.m.

ADDRESSES: 111 Memorial Drive, Barkley Centre, Paducah, Kentucky.

FOR FURTHER INFORMATION CONTACT: W. Don Seaborg, Deputy Designated Federal Officer, Department of Energy Paducah Site Office, Post Office Box 1410, MS–103, Paducah, Kentucky 42001, (270) 441–6806.

SUPPLEMENTARY INFORMATION: *Purpose of the Board:* The purpose of the Board is to make recommendations to DOE and its regulators in the areas of environmental restoration and waste management activities.

Tentative Agenda

5:30 p.m. Informal Discussion
6:00 p.m. Call to Order; Approve Minutes
6:10–7:00 p.m. DDFO's Comments; Board Response; Public Comments
7:00 p.m. Presentations
8:30 p.m. Task Force and Subcommittee Reports; Board Response; Public Comments
9:00 p.m. Administrative Issues
9:30 p.m. Adjourn

Copies of the final agenda will be available at the meeting.

Public Participation: The meeting is open to the public. Written statements may be filed with the Committee either before or after the meeting. Individuals who wish to make oral statements pertaining to agenda items should contact Pat J. Halsey at the address or by telephone at 1–800–382–6938, #5. Requests must be received five days prior to the meeting and reasonable provision will be made to include the presentation in the agenda. The Designated Federal Officer is empowered to conduct the meeting in a fashion that will facilitate the orderly conduct of business. Each individual wishing to make public comment will be provided a maximum of five minutes to present their comments as the first item of the meeting agenda.

Minutes: The minutes of this meeting will be available for public review and copying at the Freedom of Information Public Reading Room, 1E–190, Forrestal Building, 1000 Independence Avenue, SW, Washington, DC 20585 between 9:00 a.m. and 4 p.m., Monday–Friday, except Federal holidays. Minutes will also be available at the Department of Energy's Environmental Information Center and Reading Room at 115 Memorial Drive, Barkley Centre, Paducah, Kentucky between 8:00 a.m. and 5:00 p.m. on Monday thru Friday or by writing to Pat J. Halsey, Department of Energy Paducah Site Office, Post Office Box 1410, MS–103, Paducah, Kentucky 42001 or by calling her at 1–800–382–6938, #5.

Issued at Washington, DC on August 22, 2001.

Belinda G. Hood,

Acting Deputy Advisory Committee Management Officer.

[FR Doc. 01–21787 Filed 8–28–01; 8:45 am]

BILLING CODE 6450–01–P

DEPARTMENT OF ENERGY

Office of Energy Efficiency and Renewable Energy

Federal Energy Management Advisory Committee

AGENCY: Department of Energy.

ACTION: Notice of open meeting.

SUMMARY: This notice announces an open meeting of the Federal Energy Management Advisory Committee (FEMAC). The Federal Advisory Committee Act (Pub. L. 92–B 463, 86 Stat. 770) requires announcement of these meetings in the **Federal Register** to allow for public participation. Executive Order 13123, ''Greening the Government through Efficient Energy Management,'' established the Federal Energy Management Advisory Committee (FEMAC) to provide public and private sector input to the Secretary of Energy on achieving new energy efficiency goals for Federal facilities. The U.S. Department of Energy's Office of Federal Energy Management Programs (FEMP) coordinates FEMAC activities.

DATES: Wednesday, September 19, 2001; 1:00 p.m. to 5:00 p.m.; Thursday, September 20, 2001; 8:30 a.m. to 4:00 p.m.

ADDRESSES: Loews L'Enfant Plaza Hotel, 480 L'Enfant Plaza, SW., Washington, DC 20024.

FOR FURTHER INFORMATION CONTACT: Steven Huff, Designated Federal Officer for the Committee, Office of Federal Energy Management Programs, U.S. Department of Energy, 1000 Independence Avenue, SW., Washington, DC 20585; (202) 586–3507; *Steven.Huff@ee.doe.gov; http://www.eren.doe.gov/femp/aboutfemp/femac.html.*

SUPPLEMENTARY INFORMATION: *Purpose of meeting:* To provide advice and guidance on a range of issues critical to meeting mandated Federal energy management goals.

Tentative Agenda: Agenda will include discussion on the following topics:

Wednesday, September 19, 2001, and Thursday, September 20, 2001

- Federal energy management budget
- Energy-savings performance contracts
- Utility energy-efficiency service contracts
- Procurement of ENERGY STAR (Registered Trademark) and other energy efficient products
- Building design
- Process energy use
- Applications of efficient and renewable energy technology (including clean energy technology) at Federal facilities
- Other energy management issues and topics
- Public comment period

Public Participation: In keeping with procedures, members of the public are welcome to observe the business of the Federal Energy Management Committee. If you would like to file a written statement with the committee, you may do so either before or after the meeting. If you would like to make oral statements regarding any of these items on the agenda, you should contact Steven Huff at (202) 586–3507 or Steven.Huff@ee.doe.gov. You must make your request for an oral statement at least 5 business days before the meeting. Members of the public will be heard in the order they sign up at the beginning of the meeting. Reasonable provision will be made to include the scheduled oral statements on the agenda. The committee chair will make every effort to hear the views of all interested parties. The chair will conduct the meeting to facilitate the orderly conduct of business. Those wishing to address the committee will be heard based on a ''first-come, first-served'' sign-up list for each session. With the limited time available, the committee also encourages written recommendations, suggestions, position papers, etc., combined with a short oral summary statement. Documents may be submitted either before or following the meeting.

Minutes: The minutes of the meeting will be available for public review and copying within 30 days at the Freedom of Information Public Reading Room; Room 1E–190; Forrestal Building; 1000 Independence Avenue, SW., Washington, DC, between 9:00 a.m. and 4:00 p.m., Monday through Friday, except Federal holidays.

Issued in Washington, DC on August 23, 2001.

Belinda Hood,

Acting Deputy Advisory Committee Management Officer.

[FR Doc. 01–21786 Filed 8–28–01; 8:45 am]

BILLING CODE 6450–01–P

DEPARTMENT OF ENERGY

Federal Energy Regulatory Commission

[Docket No. ER01–2424–000]

Alliance Energy Services Partnership; Notice of Issuance of Order

August 23, 2001.

Alliance Energy Services Partnership (AESP) submitted for filing a rate schedule under which AESP will engage in wholesale electric power and energy transactions at market-based rates. AESP also requested waiver of various Commission regulations. In particular, AESP requested that the Commission grant blanket approval under 18 CFR Part 34 of all future issuances of securities and assumptions of liability by AESP.

On August 16, 2001, pursuant to delegated authority, the Director, Division of Corporate Applications, Office of Markets, Tariffs and Rates, granted requests for blanket approval under Part 34, subject to the following:

Within thirty days of the date of the order, any person desiring to be heard or to protest the blanket approval of issuances of securities or assumptions of liability by AESP should file a motion to intervene or protest with the Federal Energy Regulatory Commission, 888 First Street, N.E., Washington, D.C. 20426, in accordance with Rules 211 and 214 of the Commission's Rules of Practice and Procedure (18 CFR 385.211 and 385.214).

Absent a request to be heard in opposition within this period, AESP authorized to issue securities and assume obligations or liabilities as a guarantor, indorser, surety, or otherwise in respect of any security of another person; provided that such issuance or assumption is for some lawful object within the corporate purposes of AESP and compatible with the public interest, and is reasonably necessary or appropriate for such purposes.

The Commission reserves the right to require a further showing that neither public nor private interests will be adversely affected by continued approval of AESP's issuances of securities or assumptions of liability.

Notice is hereby given that the deadline for filing motions to intervene or protests, as set forth above, is September 17, 2001.

Copies of the full text of the Order are available from the Commission's Public Reference Branch, 888 First Street, N.E., Washington, D.C. 20426. The Order may also be viewed on the web at *http://www.ferc.gov* using the ''RIMS'' link, select ''Docket#'' and follow the instructions (call 202–208–2222 for assistance). Comments, protests and interventions may be filed electronically via the Internet in lieu of paper. See, 18 CFR 385.2001(a)(1)(iii) and the instructions on the Commission's web site under the ''e-Filing'' link.

David P. Boergers,

Secertary.

[FR Doc. 01–21758 Filed 8–28–01; 8:45 am]

BILLING CODE 6717–01–P

DEPARTMENT OF ENERGY

Federal Energy Regulatory Commission

[Docket No. ER01–2355–000]

Beacon Generating, LLC; Notice of Issuance of Order

August 23, 2001.

Beacon Generating, LLC (Beacon) submitted for filing a rate schedule under which Beacon will engage in wholesale electric power and energy transactions at market-based rates. Beacon also requested waiver of various Commission regulations. In particular, Beacon requested that the Commission grant blanket approval under 18 CFR part 34 of all future issuances of securities and assumptions of liability by Beacon.

On August 15, 2001, pursuant to delegated authority, the Director, Division of Corporate Applications, Office of Markets, Tariffs and Rates, granted requests for blanket approval under Part 34, subject to the following:

Within thirty days of the date of the order, any person desiring to be heard or to protest the blanket approval of issuances of securities or assumptions of liability by Beacon should file a motion to intervene or protest with the Federal Energy Regulatory Commission, 888 First Street, NE., Washington, DC 20426, in accordance with Rules 211 and 214 of the Commission's Rules of Practice and Procedure (18 CFR 385.211 and 385.214).

Absent a request to be heard in opposition within this period, Beacon is authorized to issue securities and assume obligations or liabilities as a guarantor, indorser, surety, or otherwise in respect of any security of another person; provided that such issuance or assumption is for some lawful object within the corporate purposes of Beacon and compatible with the public interest, and is reasonably necessary or appropriate for such purposes.

The Commission reserves the right to require a further showing that neither public nor private interests will be adversely affected by continued approval of Beacon's issuances of securities or assumptions of liability.

Notice is hereby given that the deadline for filing motions to intervene or protests, as set forth above, is September 14, 2001.

Copies of the full text of the Order are available from the Commission's Public Reference Branch, 888 First Street, NE., Washington, DC 20426. The Order may also be viewed on the web at *http://www.ferc.gov* using the ''RIMS'' link, select ''Docket#'' and follow the instructions (call 202–208–2222 for assistance). Comments, protests and interventions may be filed electronically via the Internet in lieu of paper. See, 18 CFR 385.2001(a)(1)(iii) and the instructions on the Commission's web site under the ''e-Filing'' link.

David P. Boergers,

Secretary.

[FR Doc. 01–21761 Filed 8–28–01; 8:45 am]

BILLING CODE 6717–01–P

DEPARTMENT OF ENERGY

Federal Energy Regulatory Commission

[Docket No. ER01–2353–000]

Caithness Energy Marketing, LLC; Notice of Issuance of Order

August 23, 2001.

Caithness Energy Marketing, LLC (Caithness Energy) submitted for filing a rate schedule under which Caithness Energy will engage in wholesale electric power and energy transactions at market-based rates. Caithness Energy also requested waiver of various Commission regulations. In particular, Caithness Energy requested that the Commission grant blanket approval under 18 CFR Part 34 of all future issuances of securities and assumptions of liability by Caithness Energy.

On August 15, 2001, pursuant to delegated authority, the Director, Division of Corporate Applications, Office of Markets, Tariffs and Rates, granted requests for blanket approval under Part 34, subject to the following:

Within thirty days of the date of the order, any person desiring to be heard or to protest the blanket approval of issuances of securities or assumptions of liability by Caithness Energy should file a motion to intervene or protest with the Federal Energy Regulatory Commission, 888 First Street, N.E., Washington, D.C. 20426, in accordance with Rules 211 and 214 of the Commission's Rules of Practice and Procedure (18 CFR 385.211 and 385.214).

Absent a request to be heard in opposition within this period, Caithness Energy is authorized to issue securities and assume obligations or liabilities as a guarantor, indorser, surety, or otherwise in respect of any security of another person; provided that such issuance or assumption is for some lawful object within the corporate purposes of Caithness Energy and compatible with the public interest, and is reasonably necessary or appropriate for such purposes.

The Commission reserves the right to require a further showing that neither public nor private interests will be adversely affected by continued approval of Caithness Energy's issuances of securities or assumptions of liability.

Notice is hereby given that the deadline for filing motions to intervene or protests, as set forth above, is September 14, 2001.

Copies of the full text of the Order are available from the Commission's Public Reference Branch, 888 First Street, N.E., Washington, D.C. 20426. The Order may also be viewed on the web at *http://www.ferc.gov* using the ''RIMS'' link, select ''Docket#'' and follow the instructions (call 202–208–2222 for assistance). Comments, protests and interventions may be filed electronically via the Internet in lieu of paper. See, 18 CFR 385.2001(a)(1)(iii) and the instructions on the Commission's web site under the ''e-Filing'' link.

David P. Boergers,

Secretary.

[FR Doc. 01–21760 Filed 8–28–01; 8:45 am]

BILLING CODE 6717–01–P

DEPARTMENT OF ENERGY

Federal Energy Regulatory Commission

[Docket No. ER01–1819–000, ER01–1819–001]

Cogentrix Lawrence County, LLC; Notice of Issuance of Order

August 23, 2001.

Cogentrix Lawrence County, LLC (Cogentrix) submitted for filing a rate schedule under which Cogentrix will engage in wholesale electric power and energy transactions at market-based rates. Cogentrix also requested waiver of various Commission regulations. In particular, Cogentrix requested that the Commission grant blanket approval under 18 CFR Part 34 of all future issuances of securities and assumptions of liability by Cogentrix.

On August 16, 2001, pursuant to delegated authority, the Director, Division of Corporate Applications, Office of Markets, Tariffs and Rates, granted requests for blanket approval under Part 34, subject to the following:

Within thirty days of the date of the order, any person desiring to be heard or to protest the blanket approval of issuances of securities or assumptions of liability by Cogentrix should file a motion to intervene or protest with the Federal Energy Regulatory Commission, 888 First Street, N.E., Washington, D.C.

20426, in accordance with Rules 211 and 214 of the Commission's Rules of Practice and Procedure (18 CFR 385.211 and 385.214).

Absent a request to be heard in opposition within this period, Cogentrix authorized to issue securities and assume obligations or liabilities as a guarantor, indorser, surety, or otherwise in respect of any security of another person; provided that such issuance or assumption is for some lawful object within the corporate purposes of Cogentrix and compatible with the public interest, and is reasonably necessary or appropriate for such purposes.

The Commission reserves the right to require a further showing that neither public nor private interests will be adversely affected by continued approval of Cogentrix's issuances of securities or assumptions of liability.

Notice is hereby given that the deadline for filing motions to intervene or protests, as set forth above, is September 17, 2001.

Copies of the full text of the Order are available from the Commission's Public Reference Branch, 888 First Street, N.E., Washington, D.C. 20426. The Order may also be viewed on the web at *http://www.ferc.gov* using the ''RIMS'' link, select ''Docket#'' and follow the instructions (call 202–208–2222 for assistance). Comments, protests and interventions may be filed electronically via the Internet in lieu of paper. See, 18 CFR 385.2001(a)(1)(iii) and the instructions on the Commission's web site under the ''e-Filing'' link.

David P. Boergers,

Secretary.

[FR Doc. 01–21756 Filed 8–28–01; 8:45 am]

BILLING CODE 6717–01–P

DEPARTMENT OF ENERGY

Federal Energy Regulatory Commission

[Docket No. ER01–2390–000]

Huntington Beach Development, L.L.C.; Notice of Issuance of Order

August 23, 2001.

On June 20, 2001, Huntington Beach Development, L.L.C. (Huntington Beach) filed an application seeking authority to sell energy and capacity at market-based rates under the terms of its proposed FERC Electric Tariff No.1. Huntington Beach also sought certain blanket approvals and waivers of the Commission's regulations. In particular, Huntington Beach requested that the Commission grant blanket approval under 18 CFR Part 34 of all future issuances of securities and assumptions of liabilities by Huntington Beach. On August 17, 2001, the Commission issued an Order Conditionally Accepting Market-Based Rate Tariff (Order), in the above-docketed proceeding.

The Commission's August 17, 2001 Order granted the request for blanket approval under Part 34, subject to the conditions found in Ordering Paragraphs (D), (E), and (G).

(D) Within 30 days of the date of issuance of this order, any person desiring to be heard or to protest the Commission's blanket approval of issuances of securities or assumptions of liabilities by Huntington Beach should file a motion to intervene or protest with the Federal Energy Regulatory Commission, 888 First Street, NE., Washington, DC 20426, in accordance with Rules 211 and 214 of the Commission's Rules of Practice and Procedure, 18 C.F.R. §§ 385.211 and 385.214.

(E) Absent a request to be heard within the period set forth in Ordering Paragraph (D) above, Huntington Beach is hereby authorized to issue securities and assume obligations or liabilities as guarantor, indorser, surety, or otherwise in respect of any security of another person; provided that such issue or assumption is for some lawful object within the corporate purposes of Huntington Beach, compatible with the public interest, and reasonably necessary or appropriate for such purposes.

(G) The Commission reserves the right to modify this order to require a further showing that neither the public nor private interests will be adversely affected by continued Commission approval of Huntington Beach's issuances of securities or assumptions of liabilities * * *.

Notice is hereby given that the deadline for filing motions to intervene or protests, as set forth above, is September 17, 2001.

Copies of the full text of the Order are available from the Commission's Public Reference Branch, 888 First Street, NE., Washington, DC 20426. The Order may also be viewed on the Internet at *http://www.ferc.fed.us/online/rims.htm* (call 202–208–2222 for assistance). Comments, protests, and interventions may be filed electronically via the internet in lieu of paper. See, 18 CFR 385.2001(a)(1)(iii) and the instructions on the Commission's web site at http://www.ferc.fed.us/efi/doorbell.htm.

David P. Boergers,

Secretary.

[FR Doc. 01–21755 Filed 8–28–01; 8:45 am]

BILLING CODE 6717–01–P

DEPARTMENT OF ENERGY

Federal Energy Regulatory Commission

[Docket No. ER01–2317–000]

Metro Energy, L.L.C.; Notice of Issuance of Order

August 23, 2001.

Metro Energy, L.L.C. (Metro Energy) submitted for filing a rate schedule under which Metro Energy will engage in wholesale electric power and energy transactions at market-based rates. Metro Energy also requested waiver of various Commission regulations. In particular, Metro Energy requested that the Commission grant blanket approval under 18 CFR Part 34 of all future issuances of securities and assumptions of liability by Metro Energy.

On August 13, 2001, pursuant to delegated authority, the Director, Division of Corporate Applications, Office of Markets, Tariffs and Rates, granted requests for blanket approval under Part 34, subject to the following:

Within thirty days of the date of the order, any person desiring to be heard or to protest the blanket approval of issuances of securities or assumptions of liability by Metro Energy should file a motion to intervene or protest with the Federal Energy Regulatory Commission, 888 First Street, NE., Washington, DC 20426, in accordance with Rules 211 and 214 of the Commission's Rules of Practice and Procedure (18 CFR 385.211 and 385.214).

Absent a request to be heard in opposition within this period, Metro Energy is authorized to issue securities and assume obligations or liabilities as a guarantor, indorser, surety, or otherwise in respect of any security of another person; provided that such issuance or assumption is for some lawful object within the corporate purposes of Metro Energy and compatible with the public interest, and is reasonably necessary or appropriate for such purposes.

The Commission reserves the right to require a further showing that neither public nor private interests will be adversely affected by continued approval of Metro Energy's issuances of securities or assumptions of liability.

Notice is hereby given that the deadline for filing motions to intervene or protests, as set forth above, is September 12, 2001.

Copies of the full text of the Order are available from the Commission's Public Reference Branch, 888 First Street, NE., Washington, DC 20426. The Order may also be viewed on the web at *http://www.ferc.gov* using the ''RIMS'' link, select ''Docket#'' and follow the instructions (call 202–208–2222 for assistance). Comments, protests and interventions may be filed electronically via the Internet in lieu of paper. See, 18 CFR 385.2001(a)(1)(iii) and the instructions on the Commission's web site under the ''e-Filing'' link.

David P. Boergers,

Secretary.

[FR Doc. 01–21759 Filed 8–28–01; 8:45 am]

BILLING CODE 6717–01–P

DEPARTMENT OF ENERGY

Federal Energy Regulatory Commission

[Docket No. EL01–109–000]

Midwest Generation, LLC v. Commonwealth Edison Company; Notice of Filing

August 23, 2001.

Take notice that on August 21, 2001, Midwest Generation, LLC (Midwest) filed a complaint against Commonwealth Edison Company (ComEd), requesting that the Commission, pursuant to its order in PJM Interconnection, LLC, 94 FERC ¶ 61,251, *order denying reh'g,* 95 FERC ¶ 61,333 (2001), order ComEd to cease requiring that Midwest purchase station service for Midwest's generating facilities located in ComEd's service area under ComEd's retail sales agreements.

Any person desiring to be heard or to protest this filing should file a motion to intervene or protest with the Federal Energy Regulatory Commission, 888 First Street, NE., Washington, DC 20426, in accordance with Rules 211 and 214 of the Commission's Rules of Practice and Procedure (18 CFR 385.211 and 385.214). All such motions or protests must be filed on or before September 10, 2001. Protests will be considered by the Commission in determining the appropriate action to be taken, but will not serve to make protestants parties to the proceeding. Any person wishing to become a party must file a motion to intervene. Answers to the complaint shall also be due on or before September 10, 2001. Copies of this filing are on file with the Commission and are available for public inspection. This filing may also be viewed on the web at *http://www.ferc.gov* using the ''RIMS'' link, select ''Docket#'' and follow the instructions (call 202–208–2222 for assistance). Comments, protests and interventions may be filed electronically via the Internet in lieu of paper. See, 18 CFR 385.2001(a)(1)(iii) and the instructions on the Commission's web site under the ''e-Filing'' link.

David P. Boergers,

Secretary.

[FR Doc. 01–21764 Filed 8–28–01; 8:45 am]

BILLING CODE 6717–01–M

DEPARTMENT OF ENERGY

Federal Energy Regulatory Commission

[Docket No. MG01–21–001]

National Fuel Gas Supply Corporation; Notice of Filing

August 23, 2001.

On August 13, 2001, National Fuel Gas Supply Corporation submitted revised standards of conduct.

National Fuel Gas Supply Corporation states that it served copies of the filing on all customers and interested state commissions.

Any person desiring to be heard or to protest said filing should file a motion to intervene or protest in this proceeding with the Federal Energy Regulatory Commission, 888 First Street, NE., Washington, DC 20426, in accordance with Rules 211 and 214 of the Commission's Rules of Practice and Procedure. (18 CFR 385.211 or 385.214) All such motions to intervene or protest should be filed on or before September 7, 2001. Protests will be considered by the Commission in determining the appropriate action to be taken but will not serve to make protestants parties to the proceeding. Any person wishing to become a party must file a motion to intervene. Copies of this filing are on file with the Commission and are available for public inspection. This filing may also be viewed on the web at *http://www.ferc.gov* using the ''RIMS'' link, select ''Docket#'' and follow the instructions (call 202–208–2222 for assistance). Comments, protests and interventions may be filed electronically via the Internet in lieu of paper. See, 18 CFR 385.2001(a)(1)(iii) and the instructions on the Commission's web site under the ''e-Filing'' link.

David P. Boergers,

Secretary.

[FR Doc. 01–21763 Filed 8–28–01; 8:45 am]

BILLING CODE 6717–01–P

DEPARTMENT OF ENERGY

Federal Energy Regulatory Commission

[Docket No. EG01–125–000]

PPL Brunner Island, LLC; Notice of Amended Application for Commission Redetermination of Exempt Wholesale Generator Status

August 23, 2001.

Take notice that on August 21, 2001, PPL Brunner Island, LLC (PPL Brunner Island) tendered for filing an Amended Request for Redetermination of Exempt Wholesale Generator Status. This request amends a Request for Redetermination of Exempt Wholesale Generator Status originally filed by PPL Brunner Island on February 2, 2001.

Any person desiring to be heard concerning the amended application for exempt wholesale generator status should file a motion to intervene or comments with the Federal Energy Regulatory Commission, 888 First Street, NE., Washington, DC 20426, in accordance with Rules 211 and 214 of the Commission's Rules of Practice and Procedure (18 CFR 385.211 and 385.214). The Commission will limit its consideration of comments to those that concern the adequacy or accuracy of the amended application. All such motions and comments should be filed on or before September 6, 2001, and must be served on the applicant. Any person wishing to become a party must file a motion to intervene. Copies of this filing are on file with the Commission and are available for public inspection. This filing may also be viewed on the web at *http://www.ferc.gov* using the ''RIMS'' link, select ''Docket#'' and follow the instructions (call 202–208–2222 for assistance). Comments, protests and interventions may be filed electronically via the Internet in lieu of paper. See, 18 CFR 385.2001(a)(1)(iii) and the instructions on the Commission's web site under the ''e-Filing'' link.

David P. Boergers,

Secretary.

[FR Doc. 01–21765 Filed 8–28–01; 8:45 am]

BILLING CODE 6717–01–P

DEPARTMENT OF ENERGY

Federal Energy Regulatory Commission

[Docket No. ER01–2460–000]

PSEG Lawrenceburg Energy Company, LLC; Notice of Issuance of Order

August 23, 2001.

PSEG Lawrenceburg Energy Company, LLC (PSEG Lawrenceburg) submitted for filing a rate schedule under which PSEG Lawrenceburg will engage in wholesale electric power and energy transactions at market-based rates. PSEG Lawrenceburg also requested waiver of various Commission regulations. In particular, PSEG Lawrenceburg requested that the Commission grant blanket approval under 18 CFR Part 34 of all future issuances of securities and assumptions of liability by PSEG Lawrenceburg.

On August 16, 2001, pursuant to delegated authority, the Director, Division of Corporate Applications, Office of Markets, Tariffs and Rates, granted requests for blanket approval under Part 34, subject to the following:

Within thirty days of the date of the order, any person desiring to be heard or to protest the blanket approval of issuances of securities or assumptions of liability by PSEG Lawrenceburg should file a motion to intervene or protest with the Federal Energy Regulatory Commission, 888 First Street, N.E., Washington, D.C. 20426, in accordance with Rules 211 and 214 of the Commission's Rules of Practice and Procedure (18 CFR 385.211 and 385.214).

Absent a request to be heard in opposition within this period, PSEG Lawrenceburg authorized to issue securities and assume obligations or liabilities as a guarantor, indorser, surety, or otherwise in respect of any security of another person; provided that such issuance or assumption is for some lawful object within the corporate purposes of PSEG Lawrenceburg and compatible with the public interest, and is reasonably necessary or appropriate for such purposes.

The Commission reserves the right to require a further showing that neither public nor private interests will be adversely affected by continued approval of PSEG Lawrenceburg's issuances of securities or assumptions of liability.

Notice is hereby given that the deadline for filing motions to intervene or protests, as set forth above, is September 17, 2001.

Copies of the full text of the Order are available from the Commission's Public Reference Branch, 888 First Street, N.E., Washington, D.C. 20426. The Order may also be viewed on the web at *http://www.ferc.gov* using the ''RIMS'' link, select ''Docket#'' and follow the instructions (call 202–208–2222 for assistance). Comments, protests and interventions may be filed electronically via the Internet in lieu of paper. See, 18 CFR 385.2001(a)(1)(iii) and the instructions on the Commission's web site under the ''e-Filing'' link.

David P. Boergers,

Secretary.

[FR Doc. 01–21757 Filed 8–28–01; 8:45 am]

BILLING CODE 6717–01–P

DEPARTMENT OF ENERGY

Federal Energy Regulatory Commission

Notice of Application Accepted for Filing and Soliciting Motions To Intervene, Protests, and Comments

August 23, 2001.

Take notice that the following hydroelectric application has been filed with the Commission and is available for public inspection:

a. *Type of Application:* Preliminary Permit.

b. *Project No.:* 12096–000.

c. *Date filed:* July 30, 2001.

d. *Applicant:* Green River 5 Associates.

e. *Name of Project:* Green River Dam 5.

f. *Location:* On the Green River in Butler County, Kentucky, at the U.S. Army Corps of Engineers' Green River Lock and Dam 5. All lands of the proposed project are federal lands.

g. *Filed Pursuant to:* Federal Power Act, 16 USC 791(a)–825(r).

h. *Applicant Contact:* David Brown Kinloch, Soft Energy Associates, 414 S. Wenzel Street, Louisville, Kentucky 40204, (502) 589–0975.

i. *FERC Contact:* Elizabeth Jones (202) 208–0246.

j. Deadline for filing motions to intervene, protests, and comments: 60 days from the issuance date of this notice.

All documents (original and eight copies) should be filed with: David P. Boergers, Secretary, Federal Energy Regulatory Commission, 888 First Street, NE., Washington, DC 20426. Comments, protests and interventions may be filed electronically via the Internet in lieu of paper. See, 18 CFR 385.2001(a)(1)(iii) and the instructions on the Commission's web site under the ''e-Filing'' link.

Please include the Project Number (12096–000) on any comments, protests, or motions filed.

The Commission's Rules of Practice and Procedure require all interveners filing a document with the Commission to serve a copy of that document on each person in the official service list for the project. Further, if an intervener files comments or documents with the Commission relating to the merits of an issue that may affect the responsibilities of a particular resource agency, they must also serve a copy of the document on that resource agency.

k. *Description of the Project:* The proposed project would place turbines in the existing lock chamber of the dam that was deactivated in 1951. The proposed project would consist of: (1) An existing 301-foot-long, 25.5-foot-high, concrete dam; (2) an existing 360-foot-long, 56-foot-wide, lock chamber; (3) proposed series of axial flow propeller turbines with a total installed capacity of 2 MW; (4) existing distribution line to be upgraded from single-phase to three-phase approximately 1 mile in length; and (5) appurtenant facilities.

The project would have an estimated annual generation of 8 GWH.

l. Copies of this filing are on file with the Commission and are available for public inspection. Copies of this filing are on file with the Commission and are available for public inspection. This filing may also be viewed on the web at *http://www.ferc.gov* using the ''RIMS'' link, select ''Docket#'' and follow the instructions (call 202–208–2222 for assistance). A copy is also available for inspection and reproduction at the address in item 'h' above.

m. Preliminary Permit—Anyone desiring to file a competing application for preliminary permit for a proposed project must submit the competing application itself, or a notice of intent to file such an application, to the Commission on or before the specified comment date for the particular application (see 18 CFR 4.36). Submission of a timely notice of intent allows an interested person to file the competing preliminary permit application no later than 30 days after the specified comment date for the particular application. A competing preliminary permit application must conform with 18 CFR 4.30(b) and 4.36.

n. Preliminary Permit—Any qualified development applicant desiring to file a competing development application must submit to the Commission, on or before a specified comment date for the particular application, either a competing development application or a notice of intent to file such an

application. Submission of a timely notice of intent to file a development application allows an interested person to file the competing application no later than 120 days after the specified comment date for the particular application. A competing license application must conform with 18 CFR 4.30(b) and 4.36.

o. Notice of Intent—A notice of intent must specify the exact name, business address, and telephone number of the prospective applicant, and must include an unequivocal statement of intent to submit, if such an application may be filed, either a preliminary permit application or a development application (specify which type of application). A notice of intent must be served on the applicant(s) named in this public notice.

p. Proposed Scope of Studies Under Permit—A preliminary permit, if issued, does not authorize construction. The term of the proposed preliminary permit would be 36 months. The work proposed under the preliminary permit would include economic analysis, preparation of preliminary engineering plans, and a study of environmental impacts. Based on the results of these studies, the Applicant would decide whether to proceed with the preparation of a development application to construct and operate the project.

q. Comments, Protests, or Motions to Intervene—Anyone may submit comments, a protest, or a motion to intervene in accordance with the requirements of Rules of Practice and Procedure, 18 CFR 385.210, .211, .214. In determining the appropriate action to take, the Commission will consider all protests or other comments filed, but only those who file a motion to intervene in accordance with the Commission's Rules may become a party to the proceeding. Any comments, protests, or motions to intervene must be received on or before the specified comment date for the particular application.

r. Filing and Service of Responsive Documents—Any filings must bear in all capital letters the title ''COMMENTS'', ''NOTICE OF INTENT TO FILE COMPETING APPLICATION'', ''COMPETING APPLICATION'', ''PROTEST'', ''MOTION TO INTERVENE'', as applicable, and the Project Number of the particular application to which the filing refers. Any of the above-named documents must be filed by providing the original and the number of copies provided by the Commission's regulations to: The Secretary, Federal Energy Regulatory Commission, 888 First Street, NE., Washington, DC 20426. An additional copy must be sent to Director, Division of Hydropower Administration and Compliance, Federal Energy Regulatory Commission, at the above-mentioned address. A copy of any notice of intent, competing application or motion to intervene must also be served upon each representative of the Applicant specified in the particular application.

s. Agency Comments—Federal, state, and local agencies are invited to file comments on the described application. A copy of the application may be obtained by agencies directly from the Applicant. If an agency does not file comments within the time specified for filing comments, it will be presumed to have no comments. One copy of an agency's comments must also be sent to the Applicant's representatives.

David P. Boergers,

Secretary.

[FR Doc. 01–21762 Filed 8–28–01; 8:45 am]

BILLING CODE 6717–01–P

ENVIRONMENTAL PROTECTION AGENCY

[FRL–7045–3]

Availability of FY 00 Grant Performance Reports for States of Alabama, Florida, Mississippi, North Carolina, and South Carolina, and Local Agencies Within Those States

AGENCY: Environmental Protection Agency (EPA).

ACTION: Notice of availability of grantee performance evaluation reports.

SUMMARY: EPA's grant regulations (40 CFR 35.150) require the Agency to evaluate the performance of agencies which receive grants. EPA's regulations for regional consistency (40 CFR 56.7) require that the Agency notify the public of the availability of the reports of such evaluations. EPA recently performed end-of-year evaluations of five state air pollution control programs [Alabama Department of Environmental Management, Florida Department of Environmental Protection, Mississippi Department of Environmental Quality, North Carolina Department of Environment and Natural Resources, and South Carolina Department of Health and Environmental Control] and 16 local programs [City of Huntsville Department of Natural Resources, AL; Jefferson County Department of Health, AL; Broward County Environmental Quality Control Board, FL; Jacksonville Air Quality Division, FL; Hillsborough County Environmental Protection Commission, FL; Dade County Environmental Resources Management, FL; Palm Beach County Public Health Unit, FL; Pinellas County Department of Environmental Management, FL; Jefferson County Air Pollution Control District, KY; Forsyth County Environmental Affairs Department, NC; Mecklenburg County Department of Environmental Protection, NC; Western North Carolina Regional Air Pollution Control Agency, NC; Memphis-Shelby County Health Department, TN; Chattanooga-Hamilton County Air Pollution Control Bureau, TN; Knox County Department of Air Pollution Control, TN; Nashville-Davidson County Metropolitan Health Department, TN]. The 21 evaluations were conducted to assess the agencies' performance under the grants awarded by EPA under authority of section 105 of the Clean Air Act. EPA Region 4 has prepared reports for each agency identified above and these reports are now available for public inspection. The evaluations for the Commonwealth of Kentucky, and the States of Georgia and Tennessee will be available for public review at a later date.

ADDRESSES: The reports may be examined at the EPA's Region 4 office, 61 Forsyth Street, SW, Atlanta, Georgia 30303, in the Air, Pesticides, and Toxics Management Division.

FOR FURTHER INFORMATION CONTACT: Gloria Knight, (404) 562–9064, for information concerning the state agencies in Mississippi, North Carolina and Tennessee, and the local agencies in those states; or Marie Persinger (404) 562–9048, for information concerning state agencies in Alabama, Kentucky or Georgia, and the local agencies in those states; or Vera Bowers, (404) 562–9053, for information concerning the state agencies in Florida and South Carolina, and the local agencies in those states. They may be contacted at the above Region 4 address.

Dated: August 17, 2001.

A. Stanley Meiburg,

Acting Regional Administrator, Region 4.

[FR Doc. 01–21814 Filed 8–28–01; 8:45 am]

BILLING CODE 6560–50–P

ENVIRONMENTAL PROTECTION AGENCY

[FRL–7046–7]

EPA Science Advisory Board; Notification of Public Advisory Committee Meeting

Stage 2 Disinfectants and Disinfection Byproduct Rule Review (S2DBP) and the Long Term 2 Enhanced Surface Water Treatment Rule Review (LT2R)

Action—Notification of a meeting to initiate the EPA Science Advisory Board (SAB) review of elements associated with EPA's proposed rules on the: 1) Stage 2 Disinfectants and Disinfection Byproducts Rule (S2DBPR) and (2) the Long Term 2 Enhanced Surface Water Treatment Rule (LT2ESWTR).

Drinking Water Committee Meeting—Background and Approach

Pursuant to the Federal Advisory Committee Act, Public Law 92–463, notice is hereby given that the Drinking Water Committee of the EPA Science Advisory Board (SAB) will meet on September 25 and 26, 2001. The meeting will be held in EPA's Ariel Rios Building, 1200 Pennsylvania Avenue, NW, Washington, DC. On September 25th, the meeting will be held in Room 6530 of Ariel Rios Building (North side) from 8:30 am until 5:00 pm. On September 26th, the meeting will be held in Room 6013 of the Ariel Rios Building from 8:30 am until noon. All times noted are Eastern Daylight Savings Time. The meeting is open to the public; however, seating is limited and available on a first come basis. *Important Notice:* Documents that are the subject of SAB reviews are normally available from the originating EPA office and are not available from the SAB Office—information concerning availability of documents from the relevant Program Office is included below.

Background Information—The U.S. Environmental Protection Agency (EPA) Science Advisory Board (SAB) is announcing the initiation of two reviews for the EPA Office of Water (OW). These reviews are mandated by Section 1412(e) of the Safe Drinking Water Act (SDWA as amended in August 1996) which states:

> The Administrator shall request comments from the Science Advisory Board (established under the Environmental Research, Development, and Demonstration Act of 1978) prior to proposal of a maximum contaminant level goal and national primary drinking water regulation. The Board shall respond, as it deems appropriate, within the time period applicable for promulgation of the national primary drinking water standard concerned. This subsection shall, under no circumstances, be used to delay final promulgation of any national primary drinking water standard.

The EPA Science Advisory Board was established to provide independent scientific and technical advice, consultation, and recommendations to the EPA Administrator on the technical bases for EPA regulations. In this sense, the Board functions as a technical peer review panel.

In the discussion below, we provide information on the charge that has been given to the Science Advisory Board and a summary of the background for each proposal.

1. Long Term 2 Enhanced Surface Water Treatment Rule

(a) *General Information:* The Safe Drinking Water Act requires EPA to develop National Primary Drinking Water Regulations for contaminants which have an adverse effect on the health of persons and where regulation provides a meaningful opportunity for public health protection. EPA is developing a Long Term 2 Enhanced Surface Water Treatment Rule to provide for increased protection of public water systems against microbial pathogens, with a specific focus on *Cryptosporidium*. The intent of the proposed LT2ESWTR is to supplement existing surface water treatment rules through establishment of targeted treatment requirements for systems with greater vulnerability to *Cryptosporidium*. Such systems include those with high source water pathogen levels and those that do not provide filtration. In addition, consistent with SDWA requirements for risk balancing, EPA will propose and finalize the LT2ESWTR simultaneously with the Stage 2 Disinfectants and Disinfection Byproducts Rule. This coordinated approach is designed to ensure that systems maintain adequate microbial protection while reducing risk from disinfection byproducts. A Federal Stakeholder Advisory Committee reached an Agreement in Principle during September 2000 with recommendations for both rules (65 FR 83015–83024).

(b) *Charge—Long Term 2 Enhanced Surface Water Treatment Rule:* EPA requests SAB comment on the following parts of the Agency's LT2ESWTR proposal and supporting documents: (1) The analysis of *Cryptosporidium* occurrence; (2) the pre- and post-LT2ESWTR *Cryptosporidium* risk assessment; and (3) the treatment credits for microbial toolbox options.

2. Stage 2 Disinfectants and Disinfection Byproduct Rule Proposal

(a) *General Information:* The 1996 Amendments to the Safe Drinking Water Act require EPA to promulgate a Stage 2 Disinfectants and Disinfection Byproducts Rule (Section 1412(b)(2)(C)) by May 2002. The intent of the proposed S2DBPR is to reduce the variability of exposure to disinfection byproducts (DBPs) for people served by different points in the distribution systems of public water supplies. EPA believes that this decreased exposure will result in reduced risk from reproductive and developmental health effects and cancer. EPA is required under the Safe Drinking Water Act to promulgate the rule as the second part of a staged set of regulations addressing DBPs. Consistent with SDWA requirements for risk balancing, EPA will propose and finalize the Long Term 2 Enhanced Surface Water Treatment Rule (LT2ESWTR) at the same time as the Stage 2 DBP Rule in order to ensure parallel protection from microbial and DBP risks. A Federal Stakeholder Advisory Committee reached an Agreement in Principle in September 2000 with recommendations for both proposed rules (65 FR 83015–83024).

(b) *Charge—Stage 2 Disinfectants and Disinfection Byproduct Rule Proposal:* EPA requests SAB comment on (1) whether the locational running annual average (LRAA) standards for total trihalomethanes (TTHMs) and haloacetic acids (HAA5), in conjunction with the initial distribution system evaluation (IDSE) of the proposed Stage 2 DBPR, more effectively achieves public health protection than the current running annual average (RAA) standards, given the existing knowledge of DBP occurrence and the available health effects data, and (2) whether the IDSE is capable of identifying new compliance monitoring points that target high TTHM and HAA5 levels and whether it is the most appropriate tool available to achieve this objective.

Process to be followed by the SAB for this Review: (a) The review of these two proposals will take place over two meetings. The first, on September 25–26, 2001, will initiate the review. In this meeting, the Drinking Water Committee, augmented by a small number of persons to add disciplinary expertise in public health, epidemiology, drinking water treatment, and statistical analysis, will be briefed by EPA representatives on the nature of the issue, the extent of the charge, and the context for the proposed rule and the review. Then, the Committee and the Agency will explore the issue from the standpoint of

acceptability of the charge, completeness of the background material provided by the Agency, the need for additional expertise for the Committee to be able to respond to the charge, and clarifications necessary on issues identified by the Committee. Finally, the Committee will begin its discussions of each rule with the intent of formulating a plan of action to be accomplished to guide the remainder of the review.

A second meeting will be scheduled in November or December in order to allow the DWC to fully evaluate and discuss the issues and charge and to draft its recommendations to the Administrator of EPA.

(b) *Panel Development:* The SAB Panel for this review consists of the membership of the DWC, augmented by experts in the following areas: a) public health, b) epidemiology, c) drinking water treatment for microbial contamination, and d) statistical techniques for the determination of the occurrence of microbes in drinking water. The names of members of the Panel for the September 25–26 meeting will be posted on the SAB Website at *www.epa.gov/sab* by the close of business on September 15, 2001. During its September meeting the Panel will discuss the need for additional persons to provide expertise and/or balance. Members of the public wishing to comment on the composition and balance of the /panel and/or wishing to suggest persons to be added to the Panel for the second meeting in November or December should send those comments by mail to Mr. Thomas O. Miller, Designated Federal Officer, SAB Drinking Water Committee (1400A), 1200 Pennsylvania Ave., NW, Washington, DC, 20460; by email at *miller.tom@epa.gov*, or by Fax at (202) 501–0582. These comments should be sent so that they are received at the SAB no later than October 12, 2001. Nominations for additions to the Panel should be identified by name, expertise (see the four areas of expertise listed above), occupation, position, address, email address, and telephone number. In addition, a nomination should contain a short discussion of why the candidate should be added to the Panel. The nomination should also include a current resume (preferably in electronic format) that provides details on the nominee's background, experience and qualifications to address the issues before the Panel. These comments and suggestions will be considered in the SAB's decision on the final makeup of the review Panel for the November/December meeting. The final list of names for the SAB members and consultants serving on the Panel will be posted on the SAB website by October 19, 2001.

This clarification of and invitation for public input to the SAB panel selection process is an attempt to explore and respond to recommendations in a recent report from the General Accounting Office (GAO) on the operations of the Office of the Science Advisory Board (GAO Report #GAO–01–531; see GAO Website: *www.gao.gov*).

For Further Information—Any member of the public wishing further information concerning this meeting should contact Mr. Thomas O. Miller, Designated Federal Officer, SAB Drinking Water Committee as stated above. For a copy of the draft meeting agenda, please contact Ms. Wanda Fields, Management Assistant at (202) 564–4539, FAX at (202) 501–0582, or email at: *fields.wanda@epa.gov*.

Materials that are the subject of this review are available on the EPA Website as noted in the section on the Charge above or from: a) *Stage 2 DBPs*, Ms. Mary Manibusan, US EPA Office of Water (OW) (MS 4607), 1200 Pennsylvania Ave., NW, Washington, DC 20460, Phone: (202) 260–3688 or via email at *manibusan.mary@epa.gov*; and b) *LT2*, Mr. Dan Schmelling, US EPA Office of Water (OW) (MS 4607), 1200 Pennsylvania Ave., NW, Washington, DC 20460, Phone: (202) 260–1439 or via email at *schmelling@epa.gov*.

Providing Oral or Written Comments at SAB Meetings

It is the policy of the EPA Science Advisory Board to accept written public comments of any length, and to accommodate oral public comments whenever possible. The EPA Science Advisory Board expects that public statements presented at its meetings will not be repetitive of previously submitted oral or written statements.

Oral Comments: In general, each individual or group wishing to make a brief oral presentation to the Panel must contact Mr. Thomas Miller, DFO for the DWC, no later than noon Eastern Time, Tuesday, September 18, 2001 in order to be included on the agenda. The request should identify the name of the individual who will make the presentation, the organization (if any) they will represent, and any requirements for audio visual equipment (e.g., overhead projector, 35 mm projector, chalkboard, etc.). Presentations at face-to-face meeting will be limited to a total time of five minutes per speaker. For teleconference meetings, opportunities for oral comment will usually be limited to no more than three minutes per speaker and no more than fifteen minutes total for all speakers together. Speakers should provide to the SAB Staff Office, at least one week prior to the meeting date, a) one signed hard copy of the comments for the file and b) an electronic version of the comments [acceptable file format: WordPerfect, Word, or Rich Text files (in IBM–PC/Windows 95/98 format)]. In addition, the speaker should bring to the meeting at least 35 copies of their comments and presentation slides for distribution to the reviewers and public at the meeting.

Written Comments: Although the SAB accepts written comments until the date of the meeting (unless otherwise stated), written comments should be received in the SAB Staff Office at least one week prior to the meeting date so that the comments may be made available to the committee for their consideration. Comments should be supplied to Mr. Miller (see contact information above) in the following formats: one hard copy with original signature, and one electronic copy via e-mail [acceptable file format: WordPerfect, Word, or Rich Text files (in IBM–PC/Windows 95/98 format)]. Those providing written comments and who attend the meeting are also asked to bring 35 copies of their comments for public distribution.

Meeting Access—Individuals requiring special accommodation at these meetings, including wheelchair access to the conference room, should contact Mr. Miller at least five business days prior to the relevant meeting so that appropriate arrangements can be made.

Dated: August 21, 2001.

Donald G. Barnes,

Staff Director, EPA Science Advisory Board.

[FR Doc. 01–21811 Filed 8–28–01; 8:45 am]

BILLING CODE 6560–50–P

ENVIRONMENTAL PROTECTION AGENCY

[OPP–34239; FRL–6783–8]

Lindane; Availability of Preliminary Risk Assessments

AGENCY: Environmental Protection Agency (EPA).

ACTION: Notice.

SUMMARY: This notice announces the availability of documents that were developed as part of EPA's pilot public participation process for making reregistration eligibility decisions for the organophosphate and certain other, non-organophosphate pesticides and for tolerance reassessments consistent with the Federal Food, Drug, and Cosmetic

Act, as amended by the Food Quality Protection Act of 1996 (FQPA). These documents are the preliminary human health and ecological fate and effects risk assessments and related documents for lindane. This notice starts a 60–day public comment period for the preliminary risk assessments. Comments are to be limited to issues directly associated with lindane and raised by the risk assessments or other documents placed in the docket. By allowing access and opportunity for comment on preliminary risk assessments, EPA is seeking to strengthen stakeholder involvement and help ensure that our decisions under FQPA are transparent and based on the best available information. The tolerance reassessment process will ensure that the United States continues to have the safest and most abundant food supply. The Agency cautions that risk assessments at this stage are preliminary only and that further refinements of the risk assessments may be appropriate for this pesticide. These documents reflect only the work and analysis conducted as of the time they were produced and it is appropriate that, as new information becomes available and/or additional analyses are performed, the conclusions they contain may change.

DATES: Comments, identified by the docket control number OPP–34239 for lindane, must be received on or before October 29, 2001.

ADDRESSES: Comments may be submitted by mail, electronically, or in person. Please follow the detailed instructions for each method as provided in Unit I. of the **SUPPLEMENTARY INFORMATION**. To ensure proper receipt by EPA, it is imperative that you identify the docket control number for lindane in the subject line on the first page of your response.

FOR FURTHER INFORMATION CONTACT: Mark Howard, Special Review and Reregistration Division (7508C), Office of Pesticide Programs, Environmental Protection Agency, 1200 Pennsylvania Ave., NW., Washington, DC 20460; telephone number: (703) 308–8172; e-mail address: howard.markt@epa.gov.

SUPPLEMENTARY INFORMATION:

I. General Information

A. Does this Action Apply to Me?

This action is directed to the public in general. This action may, however, be of interest to those persons who are or may be required to conduct testing of chemical substances under the Federal Food, Drug, and Cosmetic Act (FFDCA), or the Federal Insecticide, Fungicide, and Rodenticide Act (FIFRA). Since other entities may also be interested, the Agency has not attempted to describe all the specific entities that may be affected by this action. If you have any questions regarding the applicability of this action to a particular entity, consult the person listed under **FOR FURTHER INFORMATION CONTACT**.

B. How Can I Get Additional Information, Including Copies of this Document and Other Related Documents?

1. *Electronically*. You may obtain electronic copies of this document, and certain other related documents that might be available electronically, from the EPA Internet Home Page at http://www.epa.gov/. On the Home Page select ''Laws and Regulations,'' ''Regulations and Proposed Rules,'' and then look up the entry for this document under the ''**Federal Register**—Environmental Documents.'' You can also go directly to the **Federal Register** listings at http://www.epa.gov/fedrgstr/. In addition, copies of the preliminary risk assessments for lindane may also be accessed at http://www.epa.gov/pesticides/reregistration/status.htm.

2. *In person*. The Agency has established an official record for this action under docket control number OPP–34239. The official record consists of the documents specifically referenced in this action, and other information related to this action, including any information claimed as Confidential Business Information (CBI). This official record includes the documents that are physically located in the docket, as well as the documents that are referenced in those documents. The public version of the official record does not include any information claimed as CBI. The public version of the official record, which includes printed, paper versions of any electronic comments submitted during an applicable comment period is available for inspection in the Public Information and Records Integrity Branch (PIRIB), Rm. 119, Crystal Mall #2, 1921 Jefferson Davis Hwy., Arlington, VA, from 8:30 a.m. to 4 p.m., Monday through Friday, excluding legal holidays. The PIRIB telephone number is (703) 305–5805.

C. How and to Whom Do I Submit Comments?

You may submit comments through the mail, in person, or electronically. To ensure proper receipt by EPA, it is imperative that you identify the docket control number for lindane, OPP–34239, in the subject line on the first page of your response.

1. *By mail*. Submit your comments to: Public Information and Records Integrity Branch (PIRIB), Information Resources and Services Division (7502C), Office of Pesticide Programs (OPP), Environmental Protection Agency, 1200 Pennsylvania Ave., NW., Washington, DC 20460.

2. *In person or by courier*. Deliver your comments to: Public Information and Records Integrity Branch (PIRIB), Information Resources and Services Division (7502C), Office of Pesticide Programs (OPP), Environmental Protection Agency, Rm. 119, Crystal Mall #2, 1921 Jefferson Davis Hwy., Arlington, VA. The PIRIB is open from 8:30 a.m. to 4 p.m., Monday through Friday, excluding legal holidays. The PIRIB telephone number is (703) 305–5805.

3. *Electronically*. You may submit your comments electronically by e-mail to: opp-docket@epa.gov, or you can submit a computer disk as described above. Do not submit any information electronically that you consider to be CBI. Avoid the use of special characters and any form of encryption. Electronic submissions will be accepted in WordPerfect 6.1/8.0 or ASCII file format. All comments in electronic form must be identified by docket control number OPP–34239. Electronic comments may also be filed online at many Federal Depository Libraries.

D. How Should I Handle CBI that I Want to Submit to the Agency?

Do not submit any information electronically that you consider to be CBI. You may claim information that you submit to EPA in response to this document as CBI by marking any part or all of that information as CBI. Information so marked will not be disclosed except in accordance with procedures set forth in 40 CFR part 2. In addition to one complete version of the comment that includes any information claimed as CBI, a copy of the comment that does not contain the information claimed as CBI must be submitted for inclusion in the public version of the official record. Information not marked confidential will be included in the public version of the official record without prior notice. If you have any questions about CBI or the procedures for claiming CBI, please consult the person listed under **FOR FURTHER INFORMATION CONTACT**.

E. What Should I Consider as I Prepare My Comments for EPA?

You may find the following suggestions helpful for preparing your comments:

1. Explain your views as clearly as possible.
2. Describe any assumptions that you used.
3. Provide copies of any technical information and/or data you used that support your views.
4. If you estimate potential burden or costs, explain how you arrived at the estimate that you provide.
5. Provide specific examples to illustrate your concerns.
6. Offer alternative ways to improve the notice.
7. Make sure to submit your comments by the deadline in this document.
8. To ensure proper receipt by EPA, be sure to identify the docket control number assigned to this action in the subject line on the first page of your response. You may also provide the name, date, and **Federal Register** citation.

II. Background

A. What Action is the Agency Taking?

EPA is making available preliminary risk assessments that have been developed as part of EPA's process for making reregistration eligibility decisions for the organophosphate and other pesticides and for tolerance reassessments consistent with the FFDCA, as amended by the FQPA. The Agency's preliminary human health and ecological fate and effects risk assessments and other related documents for lindane are available in the individual pesticide dockets. As additional comments, reviews, and risk assessment modifications become available, these will also be docketed for lindane.

The Agency cautions that the lindane risk assessments are preliminary only and that further refinements may be appropriate. These documents reflect only the work and analysis conducted as of the time they were produced and it is appropriate that, as new information becomes available and/or additional analyses are performed, the conclusions they contain may change.

The Agency is providing an opportunity, through this notice, for interested parties to provide written comments and input to the Agency on the preliminary risk assessments for the chemicals specified in this notice. Such comments and input could address, for example, the availability of additional data to further refine the risk assessments, such as percent crop treated information or submission of residue data from food processing studies, or could address the Agency's risk assessment methodologies and assumptions as applied to this specific chemical. Comments should be limited to issues raised within the preliminary risk assessments and associated documents. EPA will provide other opportunities for public comment on other science issues associated with the pesticide tolerance reassessment program. Failure to comment on any such issues as part of this opportunity will in no way prejudice or limit a commenter's opportunity to participate fully in later notice and comment processes. All comments should be submitted by October 29, 2001 using the methods in Unit I. of the **SUPPLEMENTARY INFORMATION**. Comments will become part of the Agency record for lindane.

List of Subjects

Environmental protection, Chemicals, Pesticides and pests.

Dated: August 2, 2001.

Robert McNally,

Acting Director, Special Review and Reregistration Division, Office of Pesticide Programs.

[FR Doc. 01–21569 Filed 8–28–01; 8:45 am]

BILLING CODE 6560–50–S

ENVIRONMENTAL PROTECTION AGENCY

[FRL–7046–6]

Waste Characterization Program Documents Applicable to Transuranic Radioactive Waste From the Savannah River Site Proposed for Disposal at the Waste Isolation Pilot Plant

AGENCY: Environmental Protection Agency.

ACTION: Notice of availability; opening of public comment period.

SUMMARY: The Environmental Protection Agency (EPA, or ''we'') is announcing the availability of, and soliciting public comments for 30 days on, Department of Energy (DOE) documents on waste characterization programs applicable to certain transuranic (TRU) radioactive waste at the Savannah River Site (SRS) proposed for disposal at the Waste Isolation Pilot Plant (WIPP). The documents are procedures and other materials related to the Central Characterization Project (CCP), established by DOE to augment the ability of TRU waste sites to characterize and certify the waste in accordance with EPA's WIPP Compliance Criteria. The documents are available for review in the public dockets listed in **ADDRESSES**. We will use these documents to evaluate the CCP activities at SRS to characterize SRS-generated contact-handled (CH) TRU debris waste during an inspection conducted the week of September 24, 2001. The purpose of the inspection is to verify that the CCP can properly characterize SRS-generated contact-handled (CH) TRU solid debris waste, consistent with the WIPP Compliance Criteria and Condition 3 of EPA's final certification decision for the WIPP.

DATES: The EPA is requesting public comment on these documents. Comments must be received by EPA's official Air Docket on or before September 28, 2001.

ADDRESSES: Comments should be submitted to: Docket No. A–98–49, Air Docket, Room M–1500 (LE–131), U.S. Environmental Protection Agency, 401 M Street, SW, Washington, DC, 20460.

DOE documents related to the CCP are available for review in the official EPA Air Docket in Washington, D.C., Docket No. A–98–49, Category II–B2, and at the following three EPA WIPP informational docket locations in New Mexico: in Carlsbad at the Municipal Library, Hours: Monday–Thursday, 10am–9pm, Friday–Saturday, 10am–6pm, and Sunday, 1pm–5pm; in Albuquerque at the Government Publications Department, General Library, University of New Mexico, Hours: vary by semester; and in Santa Fe at the New Mexico State Library, Hours: Monday–Friday, 9am–5pm.

Copies of items in the docket may be requested by writing to Docket A–98–49 at the address provided above, or by calling (202) 260–7548. As provided in EPA's regulations at 40 CFR Part 2, and in accordance with normal EPA docket procedures, a reasonable fee may be charged for photocopying. Air Docket A–98–49 in Washington, DC, accepts comments sent electronically or by fax (fax no.: 202–260–4400; E-mail: a-and-r-docket@epa.gov).

FOR FURTHER INFORMATION CONTACT: Ms. Rajani D. Joglekar, Office of Radiation and Indoor Air, (202) 564–9310, or call EPA's 24-hour, toll-free WIPP Information Line, 1–800–331–WIPP, or visit our website at http://www.epa.gov/radiation/wipp/announce.html.

SUPPLEMENTARY INFORMATION: The DOE owns and operates the Waste Isolation Pilot Project (WIPP) facility near Carlsbad in southeastern New Mexico as a deep geologic repository for disposal of TRU radioactive waste. As defined by the WIPP Land Withdrawal Act (LWA) of 1992 (Pub. L. No. 102–579), as amended (Pub. L. No. 104–201), TRU waste consists of materials containing elements having atomic numbers greater than 92 (with half-lives greater than twenty years), in concentrations greater

than 100 nanocuries of alpha-emitting TRU isotopes per gram of waste. Most TRU waste consists of items contaminated during the production of nuclear weapons, such as rags, equipment, tools, and organic and inorganic sludges.

On May 13, 1998, EPA announced its final compliance certification decision to the Secretary of Energy (published May 18, 1998, 63 FR 27354). This decision states that the WIPP will comply with the EPA's radioactive waste disposal regulations at 40 CFR part 191, subparts B and C.

The final WIPP certification decision includes a condition that prohibits shipment of TRU waste for disposal at WIPP from any site other than LANL until EPA has approved the procedures developed to comply with the waste characterization requirements of § 194.24(c)(4) (Condition 3 of Appendix A to 40 CFR part 194). The EPA's approval process for waste generator sites is described in § 194.8. As part of EPA's decision making process, DOE is required to submit to EPA relevant documentation of waste characterization programs at each DOE waste generator site seeking approval for shipment of TRU radioactive waste to the WIPP. In accordance with § 194.8, EPA will place such documentation in the official Air Docket in Washington, D.C., and in informational dockets in the State of New Mexico, for public review and comment.

At the direction of DOE's Carlsbad Field Office (CBFO), Westinghouse TRU Solutions (WTS) has been developing the CCP mainly to assist DOE facilities that have generated small quantities of TRU waste with meeting applicable waste characterization requirements. At the present stage of development of the CCP, all required waste characterization will be managed by WTS at TRU waste sites prior to shipment to the WIPP. For the inspection announced today, the CCP will demonstrate their capabilities in characterizing TRU debris waste generated at SRS in accordance with the DOE/CBFO-implemented waste characterization (WC) and quality assurance (QA) plans.

DOE/CBFO conducted an initial audit of the CCP at SRS on June 18–20, 2001, which EPA observed. DOE/CBFO has scheduled a final audit for the week of September 24, 2001, to evaluate the adequacy, implementation, and effectiveness of technical and quality assurance activities related to the CCP TRU waste characterization of contact-handled, retrievably-stored debris waste at SRS. The evaluation would lead DOE/CBFO to certify that the CCP-characterized CH TRU debris waste meets all applicable requirements at 40 CFR part 194. We will conduct an independent inspection under § 194.8 at the same time as DOE/CBFO's audit to verify that the CCP has characterized SRS-generated CH TRU debris waste appropriately in accordance with Condition 3 of our WIPP Certification Decision (Appendix A to 40 CFR part 194) and § 194.24(c)(4). The CCP may not ship transuranic waste from SRS to the WIPP until EPA has approved the CCP's waste characterization processes and quality assurance in accordance with § 194.8.

The following documents related to the CCP have been placed in Air Docket A–98–49, particularly: (1) ''CCP–PO–001—Revision 2, 7/23/01—CCP Transuranic Waste Quality Assurance Characterization Project Plan'' (2) ''CCP–PO–002—Revision 2, 7/23/01—CCP Transuranic Waste Certification Plan'' and (3) IWR NO. AC27750W—Revision 0, 7/23/01—Savannah River Site Statement of Work IE 8863 for Clarification of SRS TRU Waste.'' These documents describe the top-tier programmatic requirements for the CCP. In accordance with § 194.8 of the WIPP compliance criteria, we are providing the public 30 days to comment on the documents in the docket. EPA will review other potentially relevant documentation and will interview CCP personnel during the inspection. Our inspection activities and findings will be summarized in our inspection report, which will be placed in Docket A–98–49.

If EPA determines that the provisions in the documents available in the EPA Docket are adequately implemented, we will notify DOE by letter and place the letter in the official Air Docket in Washington, D.C., and in the informational docket locations in New Mexico. We will not make a determination of compliance prior to the inspection or before the 30-day comment period has closed.

Information on EPA's radioactive waste disposal standards (40 CFR part 191), the compliance criteria (40 CFR part 194), and EPA's certification decision is filed in the official EPA Air Docket, Dockets No. R–89–01, A–92–56, and A–93–02, respectively, and is available for review in Washington, D.C., and at the three EPA WIPP informational docket locations in New Mexico. The dockets in New Mexico contain only major items from the official Air Docket in Washington, D.C., plus those documents added to the official Air Docket after the October 1992 enactment of the WIPP LWA.

Dated: August 23, 2001.

Jeffrey R. Holmstead,

Assistant Administrator for Air and Radiation.

[FR Doc. 01–21812 Filed 8–28–01; 8:45 am]

BILLING CODE 6560–50–P

FEDERAL RESERVE SYSTEM

Government in the Sunshine Meeting Notice

AGENCY HOLDING THE MEETING: Board of Governors of the Federal Reserve System.

TIME AND DATE: 11:00 a.m., Tuesday, September 4, 2001.

PLACE: Marriner S. Eccles Federal Reserve Board Building, 20th and C Streets, N.W., Washington, D.C. 20551.

STATUS: Closed.

MATTERS TO BE CONSIDERED:

1. Personnel actions (appointments, promotions, assignments, reassignments, and salary actions) involving individual Federal Reserve System employees.

2. Any items carried forward from a previously announced meeting.

CONTACT PERSON FOR MORE INFORMATION: Michelle A. Smith, Assistant to the Board; 202–452–3204.

SUPPLEMENTARY INFORMATION: You may call 202–452–3206 beginning at approximately 5 p.m. two business days before the meeting for a recorded announcement of bank and bank holding company applications scheduled for the meeting; or you may contact the Board's Web site at *http://www.federalreserve.gov* for an electronic announcement that not only lists applications, but also indicates procedural and other information about the meeting.

Dated: August 24, 2001.

Robert deV. Frierson,

Deputy Secretary of the Board.

[FR Doc. 01–21883 Filed 8–24–01; 4:33 pm]

BILLING CODE 6210–01–P

GENERAL SERVICES ADMINISTRATION

Office of Communications

Cancellation of a Standard Form by the Office of Personnel Management (OPM)

AGENCY: Office of Communications, GSA.

ACTION: Notice.

SUMMARY: The Office of Personnel Management (OPM) cancelled SF 71,

Application for Leave since they no longer prescribe any standard data elements for requesting and approving leave. Each agency needs to set their own policy on how this process is handled. OPM developed their own form which they are happy to share with you but is NOT for mandatory use. You can obtain a copy of this form from the internet (Address: *http://www.opm.gov/forms*).

FOR FURTHER INFORMATION CONTACT: Ms. Barbara Williams, General Services Administration, (202) 501–0581.

DATES: Effective August 29, 2001.

Dated: August 21, 2001.

Barbara M. Williams,

Deputy Standard and Optional Forms Management Officer, General Services Administration.

[FR Doc. 01–21806 Filed 8–28–01; 8:45 am]

BILLING CODE 6820–34–M

GENERAL SERVICES ADMINISTRATION

[OMB Control No. 3090–0243]

Submission for OMB Review and Extension; Comment Request Entitled GSAR 516.203–4, Contract Clause and GSAR 552.216–70 Economic Price Adjustment (EPA)

AGENCY: General Services Administration, GSA.

ACTION: Notice of a request for an extension to an existing OMB clearance.

SUMMARY: Under the provisions of the Paperwork Reduction Act of 1995 (44 U.S.C. Chapter 35), the General Services Administration (GSA) has submitted to the Office of Management and Budget (OMB) a request to review and approve an extension of a previously approved information collection requirement concerning the Federal Supply Schedule (FSS) Multiple Award Schedule (MAS) Economic Price Adjustment (EPA) Clause.

Public comments are particularly invited on: Whether the information collection generated by the GSAR Clause, Economic Price Adjustment (EPA) is necessary to determine an offeror's price is fair and reasonable; whether it will have practical utility; whether our estimate of the public burden of this collection of information is accurate, and based on valid assumptions and methodology; ways to enhance the quality, utility, and clarity of the information to be collected; and ways in which we can minimize the burden of the collection of information on those who are to respond, through the use of appropriate technological collection techniques or other forms of information technology.

DATES: Comments may be submitted on or before October 29, 2001.

FOR FURTHER INFORMATION CONTACT: Julia Wise, Acquisition Policy Division, GSA (202) 208–1168.

ADDRESSES: Comments regarding this burden estimate or any other aspect of this collection of information, including suggestions for reducing this burden, should be submitted to: Edward Springer, GSA Desk Officer, OMB, Room 10236, NEOB, Washington, DC 20503, and a copy to Stephanie Morris, General Services Administration (MVP), 1800 F Street, NW., Room 4035, Washington, DC 20405.

SUPPLEMENTARY INFORMATION:

A. Purpose

The General Services Administration (GSA) has various mission responsibilities related to the acquisition and provision of FSS MAS contracts. These mission responsibilities generate requirements that are realized through the solicitation and award of contracts for various products and services. Individual solicitations and resulting contracts may impose unique information collection and reporting requirements on contractors not required by regulation, but necessary to evaluate particular program accomplishments and measure success in meeting program objectives.

B. Annual Reporting Burden

Respondents: 3,857.
Annual Responses: 5,786.
Burden Hours: 3,857.

Obtaining Copies of Proposals

A copy of this proposal may be obtained from the General Services Administration, Acquisition Policy Division (MVP), 1800 F Street, NW., Room 4035, Washington, DC 20405, or by telephoning (202) 501–4744, or by faxing your request to (202) 501–4067. Please cite OMB Control No. 3090–0243, Contract Clause and Economic Price Adjustment, in all correspondence.

David A. Drabkin,

Deputy Associate Administrator, Office of Acquisition Policy.

[FR Doc. 01–21807 Filed 8–28–01; 8:45 am]

BILLING CODE 6820–61–M

DEPARTMENT OF HEALTH AND HUMAN SERVICES

Office of the Secretary

Agency Information Collection Activities: Submission for OMB Review; Comment Request

The Department of Health and Human Services, Office of the Secretary publishes a list of information collections it has submitted to the Office of Management and Budget (OMB) for clearance in compliance with the Paperwork Reduction Act of 1995 (44 U.S.C. Chapter 35) and 5 CFR 1320.5. The following are those information collections recently submitted to OMB.

1. Assessment of State Laws, Regulations and Practices Affecting the Collection and Reporting of Racial and Ethnic Data by Health Insurers and Managed Care Plans—NEW—One of the overarching goals of Healthy People 2010 is the elimination of health disparities, including those associated with race and ethnicity. The lack of data has been identified as a barrier to performance measurement for this goal. Therefore, the Office of Minority Health is proposing a study which will examine States' laws and policies concerning the collection and use of racial and ethnic data by health insurers and managed care plans. The study involves visits to 13 States for an in-depth look at their policies and practices, interviews with State officials and representatives of the States' major managed care plans and health insurance industry, and focus groups with consumer and civil rights organizations. *Respondents:* State or local governments; businesses or other for-profit; non-profit institutions.

BURDEN INFORMATION

Instrument	Number of respondents	Burden per response	Burden hours
Administrator Interview guide	78	4	312
Consumer Focus Group	130	2	260
Total	208		572

OMB Desk Officer; Allison Herron Eydt.

Copies of the information collection packages listed above can be obtained by calling the OS Reports Clearance Officer on (202) 690–6207. Written comments and recommendations for the proposed information collection should be sent directly to the OMB desk officer designated above at the following address: Human Resources and Housing Branch, Office of Management and Budget, New Executive Office Building, Room 10235, 725 17th Street NW, Washington, DC 20503.

Comments may also be sent to Cynthia Agens Bauer, OS Reports Clearance Officer, Room 503H, Humphrey Building, 200 Independence Avenue SW, Washington DC, 20201. Written comments should be received within 30 days of this notice.

Dated: August 17, 2001.

Kerry Weems,

Acting Deputy Assistant Secretary, Budget.

[FR Doc. 01–21731 Filed 8–28–01; 8:45 am]

BILLING CODE 4150–29–M

DEPARTMENT OF HEALTH AND HUMAN SERVICES

Office of the Secretary

Request for Comments To Inform HHS Initiative on Rural Communities

SUMMARY: The Department of Health and Human Services (HHS) is undertaking an examination of how each HHS agency's program can be strengthened to better serve rural communities. HHS seeks public comments to inform this process.

FOR FURTHER INFORMATION CONTACT: Dianne McSwain, HHS Office of Intergovermental Affairs, 202–401–5926 or Marcia Brand, HHS Health and Resources and Services Administration, Office of Rural Health Policy, 301–443–0835.

DATES: All comments must be received on or before the close of business on September 28, 2001.

ADDRESSES: All comments should be addressed to the HHS Initiative on Rural Communities, Department of Health and Human Services, Hubert H. Humphrey Building, 200 Independence Avenue, SW., Room 638–G, Washington, DC 20201. Comments may also be submitted through email to: *rural.comments@hhs.gov.* Individuals and organizations submitting comments are encouraged to include contact information for further clarification and a zip code to facilitate possible analysis of geographic distribution of the comments received.

SUPPLEMENTARY INFORMATION: On July 25, 2001, HHS Secretary Tommy G. Thompson announced the HHS Initiative on Rural Communities, a Department-wide effort to improve the provision of health and human services to rural families and individuals. An HHS Rural Task Force has been created to conduct a program-by-program examination of how HHS programs can improve services to rural communities. This internal HHS Rural Task Force; will examine how existing programs serve rural communities; will identify administrative, regulatory and statutory barriers to serving people in rural communities; will consider the impact of the HHS funding on rural economies; and will make recommendations to improve health care and social services to rural America. The HHS Task Force will report to the Secretary of Health and Human Services on October 25, 2001 with a detailed analysis of HHS programs and a strategic plan for sustaining the commitment to rural communities.

Recognizing the value of the insight and experience of those at the state, local, and tribal level serving rural communities, the HHS Task Force invites the public to submit to us your specific written comments on issues such as (1) Improving rural communities' access to quality health and human services; (2) strengthening rural families; (3) strengthening rural communities and supporting economic development; (4) partnering with State, local and Tribal governments to support rural communities; and (5) supporting a rural voice in federal policy making.

All comments should be submitted to the Department of Health and Human Services at the address noted above. The comments will be considered in the development of the report to Secretary Thompson and the ensuing strategic plan. Since the anticipated volume of responses will preclude a personal response to each of the comments, HHS wishes to thank you in advance for your comments.

Andrew C. Knapp,

Acting Director, Office of Intergovernmental Affairs.

[FR Doc. 01–21732 Filed 8–28–01; 8:45 am]

BILLING CODE 4150–03–P

DEPARTMENT OF HEALTH AND HUMAN SERVICES

Centers for Disease Control and Prevention

[Program Announcement 01196]

Evaluation of Breast Cancer Incidence; Notice of Availability of Funds; Amendment

A notice announcing the availability of fiscal year (FY) 2001 funds for a grant program for an Evaluation of Breast Cancer Incidence in DuPage County, Illinois, was published in the **Federal Register** on August 7, 2001, [Vol. 66, No. 152, Page 41245]. This notice is amended as follows:

On page 41245, First Column, Under Section A, Second Paragraph, Second Sentence, Lines 6–11, delete: ''Through this program, the DuPage County Health Department will be able to determine the incidence of breast cancer in the county and to outline a plan to address the programmatic and health issues identified.'' and change to: ''Through this program, the Illinois Department of Health will be able to determine the incidence of breast cancer in DuPage County and to outline a plan to address the programmatic and health issues identified in the county.''

On Page 41245, First Column, Under Section B, First Sentence, delete: ''Assistance will be provided to the DuPage County Health Department in Wheaton, Illinois.'' and change to: ''Assistance will be provided only to the Illinois Department of Health.'' On Page 41245, First Column, Under Section B, Third Sentence, delete: ''Eligibility is limited to the DuPage County Health Department * * *'' and change to: ''Eligibility is limited to the Illinois Department of Health * * *''.

Dated: August 23, 2001.

John L. Williams,

Director, Procurement and Grants Office, Centers for Disease Control and Prevention.

[FR Doc. 01–21785 Filed 8–28–01; 8:45 am]

BILLING CODE 4163–18–P

DEPARTMENT OF HEALTH AND HUMAN SERVICES

Food and Drug Administration

[Docket No. 01D–0286]

Draft ''Guidance for Industry: Premarket Notifications [510(k)s] for In Vitro HIV Drug Resistance Genotype Assays;'' Availability

AGENCY: Food and Drug Administration, HHS.

ACTION: Notice.

SUMMARY: The Food and Drug Administration (FDA) is announcing the availability of a draft document entitled ''Guidance for Industry: Premarket Notifications [510(k)s] for In Vitro HIV Drug Resistance Genotype Assays'' dated August 2001. In Vitro HIV Drug Resistance Genotype Assays are Class III devices that FDA is considering reclassifying as Class II, with special controls. This document describes such special controls, in draft, which would be intended to assist manufacturers of In Vitro HIV Drug Resistance Genotype Assays to file premarket notifications [510(k)s] instead of premarket approval applications (PMAs) for this device.

DATES: Submit written or electronic comments on the draft guidance to ensure their adequate consideration in preparation of the final document by October 29, 2001. General comments on agency guidance documents are welcome at any time.

ADDRESSES: Submit written requests for single copies of the draft guidance to the Office of Communication, Training, and Manufacturers Assistance (HFM–40), Center for Biologics Evaluation and Research (CBER), Food and Drug Administration, 1401 Rockville Pike, Rockville, MD 20852–1448. Send one self-addressed adhesive label to assist the office in processing your requests. The document may also be obtained by mail by calling the CBER Voice Information System at 1–800–835–4709 or 301–827–1800, or by fax by calling the FAX Information System at 1–888–CBER–FAX or 301–827–3844. See the **SUPPLEMENTARY INFORMATION** section for electronic access to the draft guidance document.

Submit written comments on the document to the Dockets Management Branch (HFA–305), Food and Drug Administration, 5630 Fishers Lane, rm. 1061, Rockville, MD 20852. Submit electronic comments to http://www.fda.gov/dockets/ecomments.

FOR FURTHER INFORMATION CONTACT: Nathaniel L. Geary, Center for Biologics Evaluation and Research (HFM–17), Food and Drug Administration, 1401 Rockville Pike, Rockville, MD 20852–1448, 301–827–6210.

SUPPLEMENTARY INFORMATION:

I. Background

FDA is announcing the availability of a draft document entitled ''Guidance for Industry: Premarket Notifications [510(k)s] for In Vitro HIV Drug Resistance Genotype Assays'' dated August 2001. These devices are currently Class III devices. FDA is considering reclassification of HIV Drug Resistance Assays as Class II devices subject to special controls. After such reclassification, this guidance, when final, would serve as a special control for these devices.

This draft guidance is being issued consistent with FDA's good guidance practices regulation (21 CFR 10.115). This draft guidance document represents the agency's current thinking on special controls for HIV Drug Resistance Genotype Assays. It does not create or confer any rights for or on any person and does not operate to bind FDA or the public. An alternative approach may be used if such approach satisfies the requirement of the applicable statutes and regulations.

II. Comments

This draft document is being distributed for comment purposes only and is not intended for implementation at this time. Interested persons may submit to the Dockets Management Branch (address above) written or electronic comments regarding this draft guidance document. Submit written or electronic comments to ensure adequate consideration in preparation of the final document by October 29, 2001. Two copies of any comments are to be submitted, except individuals may submit one copy. Comments should be identified with the docket number found in the brackets in the heading of this document. A copy of the document and received comments are available for public examination in the Dockets Management Branch between 9 a.m. and 4 p.m., Monday through Friday.

III. Electronic Access

Persons with access to the Internet may obtain the document at http://www.fda.gov/cber/guidelines.htm or http://www.fda.gov/ohrms/dockets/default.htm.

Dated: August 20, 2001.

Margaret M. Dotzel,

Associate Commissioner for Policy.

[FR Doc. 01–21734 Filed 8–28–01; 8:45 am]

BILLING CODE 4160–01–S

DEPARTMENT OF HEALTH AND HUMAN SERVICES

Food and Drug Administration

[Docket No. 97D–0318]

Draft ''Guidance for Industry: Revised Preventive Measures to Reduce the Possible Risk of Transmission of Creutzfeldt-Jakob Disease (CJD) and Variant Creutzfeldt-Jakob Disease (vCJD) by Blood and Blood Products;'' Availability

AGENCY: Food and Drug Administration, HHS.

ACTION: Notice.

SUMMARY: The Food and Drug Administration (FDA) is announcing the availability of a draft document entitled ''Guidance for Industry: Revised Preventive Measures to Reduce the Possible Risk of Transmission of Creutzfeldt-Jakob Disease (CJD) and Variant Creutzfeldt-Jakob Disease (vCJD) by Blood and Blood Products'' dated August 2001. The draft guidance document provides comprehensive current recommendations to all registered blood and plasma establishments for deferral of donors with possible exposure to the agent of vCJD. The new recommendations are intended to minimize the possible risk of vCJD transmission from blood products. When the draft guidance is finalized, the guidance document entitled ''Revised Preventive Measures to Reduce the Possible Risk of Transmission of Creutzfeldt-Jakob Disease (CJD) and New Variant Creutzfeldt-Jakob Disease (nvCJD) by Blood and Blood Products'' dated November 1999 will be superseded.

DATES: Submit written or electronic comments on the draft guidance to ensure their adequate consideration in preparation of the final document by September 28, 2001. General comments on agency guidance documents are welcome at any time.

ADDRESSES: Submit written requests for single copies of the draft guidance to the Office of Communication, Training, and Manufacturers Assistance (HFM–40), Center for Biologics Evaluation and Research (CBER), Food and Drug Administration, 1401 Rockville Pike, Rockville, MD 20852–1448. Send one self-addressed adhesive label to assist the office in processing your requests. The document may also be obtained by mail by calling the CBER Voice Information System at 1–800–835–4709 or 301–827–1800, or by fax by calling the FAX Information System at 1–888–CBER–FAX or 301–827–3844. See the

SUPPLEMENTARY INFORMATION section for electronic access to the draft guidance document.

Submit written comments on the document to the Dockets Management Branch (HFA–305), Food and Drug Administration, 5630 Fishers Lane, rm. 1061, Rockville, MD 20852. Submit electronic comments to http://www.fda.gov/dockets/ecomments.

FOR FURTHER INFORMATION CONTACT: Valerie A. Butler, Center for Biologics Evaluation and Research (HFM–17), Food and Drug Administration, 1401 Rockville Pike, Rockville, MD 20852–1448, 301–827–6210.

SUPPLEMENTARY INFORMATION:

I. Background

FDA is announcing the availability of a draft document entitled ''Guidance for Industry: Revised Preventive Measures to Reduce the Possible Risk of Transmission of Creutzfeldt-Jakob Disease (CJD) and Variant Creutzfeldt-Jakob Disease (vCJD) by Blood and Blood Products'' dated August 2001. This guidance document contains comprehensive revised recommendations based upon advisory committee discussions and internal Public Health Service and FDA deliberations. We (FDA) have developed recommendations for donor deferral, and product retrieval, quarantine, and disposition based upon consideration of risk in the donor and product, and the effect that withdrawals and deferrals might have on the supply of life- and health-sustaining blood components and plasma derivatives. The new recommendations are intended to minimize the possible risk of vCJD transmission from blood products while maintaining their availability. When the draft guidance is finalized, the guidance document entitled ''Revised Preventive Measures to Reduce the Possible Risk of Transmission of Creutzfeldt-Jakob Disease (CJD) and New Variant Creutzfeldt-Jakob Disease (nvCJD) by Blood and Blood Products'' dated November 1999 (64 FR 65715, November 23, 1999) will be superseded.

This draft guidance is being issued consistent with FDA's good guidance practices regulation (21 CFR 10.115). This draft guidance document represents the agency's current thinking on this topic. It does not create or confer any rights for or on any person and does not operate to bind FDA or the public. An alternative approach may be used if such approach satisfies the requirement of the applicable statutes and regulations.

II. Comments

This draft document is being distributed for comment purposes only and is not intended for implementation at this time. Interested persons may submit to the Dockets Management Branch (address above) written or electronic comments regarding this draft guidance document. Submit written or electronic comments to ensure adequate consideration in preparation of the final document by September 28, 2001. Two copies of any comments are to be submitted, except individuals may submit one copy. Comments should be identified with the docket number found in the brackets in the heading of this document. A copy of the document and received comments are available for public examination in the Dockets Management Branch between 9 a.m. and 4 p.m., Monday through Friday.

III. Electronic Access

Persons with access to the Internet may obtain the document at either http://www.fda.gov/cber/guidelines.htm or http://www.fda.gov/ohrms/dockets/default.htm.

Dated: August 23, 2001.

Margaret M. Dotzel,

Associate Commissioner for Policy.

[FR Doc. 01–21920 Filed 8–27–01; 11:39 am]

BILLING CODE 4160–01–S

DEPARTMENT OF HEALTH AND HUMAN SERVICES

National Institutes of Health

Environmental Impact Statement Supplement: Montgomery County, Maryland

AGENCY: National Institutes of Health (NIH), DHHS.

Authority: 42 U.S.C. 4321–4347 (National Environmental Policy Act).

ACTION: Notice of intent.

SUMMARY: The NIH is issuing this notice to advise the public that a supplement to a final environmental impact statement will be prepared for a revision or update of the 1995 Master Plan for the NIH Main Campus in Bethesda in Montgomery County, Maryland.

FOR FURTHER INFORMATION CONTACT: Janyce Hedetniemi, Director, Office of Community Liaison, National Institutes of Health, Building 1, Room 259, One Center Drive, Bethesda, Maryland 20892–0172, telephone: (301) 496–3931.

SUPPLEMENTARY INFORMATION: The 322-acre NIH Bethesda Campus encompasses the largest biomedical research facility in the world. Approximately 17,000 people work at the site in 65 buildings with more than seven million square feet of floor space. The Office of the Director, NIH administrative staff, and the researchers and laboratories of individual research Institutes and Centers are located on the campus. The focal point of the campus is the Clinical Center Complex.

A Master Plan provides guidance in coordinating physical development in terms of buildings, utilities, roads, parking, landscaping, and general design guidelines. A Master Plan and Environmental Impact Statement (EIS) were prepared for the campus in 1995 (*1995 Master Plan, NIH Main Campus, Bethesda, Maryland, Final, Environmental Impact Statement for the 1995 NIH Main Campus Master Plan, 2 vol.* The Final Master Plan and Final EIS were published in January 1996 after approval by the National Capital Planning Commission.

The NIH declared its intent in the original documentation to update the Master Plan at approximately five-year intervals. The proposed action is to prepare the updated documentation. Since the development of the 1995 Master Plan included a complete National Environmental Policy Act (NEPA) scoping process and established baseline environmental conditions and potential cumulative impacts, and since the proposed action is an update/revision and not a new alternative, it is the intent of NIH to issue draft and final supplements to the original Final EIS. NIH has kept the surrounding community informed of planning issues on a continuing basis in the interim through the Community Liaison Council.

Alternatives that will be considered include (1) an update or revision of the 1995 master plan, and (2) taking no action.

No formal scoping meeting will be held. Letters describing the proposed action and soliciting comments will be sent to appropriate Federal, State, and local agencies, and to private organizations and citizens who have expressed interest in this proposal. A public hearing will be held, and public notice will be given of the time and place. The Draft EIS supplement will be available for public and agency review and comment. It is anticipated that the Draft will be available in November 2001.

To ensure that the full range of issues related to this proposed action are addressed, comments are invited from all interested parties. Comments and questions should be directed to the NIH at the address listed above.

Dated: August 20, 2001.

Yvonne T. Maddox,

Acting Deputy Director, National Institutes of Health.

[FR Doc. 01–21778 Filed 8–28–01; 8:45 am]

BILLING CODE 4140–01–P

DEPARTMENT OF HEALTH AND HUMAN SERVICES

National Institutes of Health

Government-Owned Inventions; Availability for Licensing

AGENCY: National Institutes of Health, Public Health Service, HHS.

ACTION: Notice,

SUMMARY: The inventions listed below are owned by agencies of the U.S. Government and are available for licensing in the U.S. in accordance with 35 U.S.C. 207 to achieve expeditious commercialization of results of federally-funded research and development. Foreign patent applications are filed on selected inventions to extend market coverage for companies and may also be available for licensing.

ADDRESSES: Licensing information and copies of the U.S. patent applications listed below may be obtained by contacting Dale D. Berkley, Ph.D., J.D., at the Office of Technology Transfer, National Institutes of Health, 6011 Executive Boulevard, Suite 325, Rockville, Maryland 20852–3804; telephone: 301/496–7735 ext. 223; fax: 301/402–0220; e-mail: berkleyd@od.nih.gov. A signed Confidential Disclosure Agreement will be required to receive copies of the patent applications.

Generalized MRI Artifact Reduction Using Array Processing Method

Peter Kellman, Elliott McVeigh (NHLBI)
DHHS Reference No. E–198–00/0 filed 03 Apr 2001

The invention is a phased array combining method for reducing artifacts in Magnetic Resonance (MR) imaging. The method uses a constrained optimization that optimizes signal-to-noise subject to the constraint of nulling ghost artifacts at known locations. The method is effective in reducing or canceling artifacts that arise in a wide variety of MR applications, including ghost artifacts from echo planar imaging and Gradient Recalled Echo with Echo Train (FGRE–ET) imaging used in cardiac or other rapid imaging applications. The strategy of using phase encode acquisition orders with distortion that results in ghosts, followed by applying this phased array ghost cancellation method has a number of benefits, including reduced blur and geometric distortion, reduced acquisition time (eliminating echo shifting), and reduced sensitivity to flow.

E-Portals in Commerce (E–PIC)

Diana V. Mukitarian (OD)
DHHS Reference No. E–147–00/0

The invention is a consolidated database for storing and maintaining vendor contact information and contract services that each can offer. The purpose of the invention is to consolidate vendor sources into one database, enabling vendors to easily add and update their contact information, to provide a variety of search criteria for providing sources for an organization's acquisitions, and to make such a system user friendly and available to the organization administrators. The system serves as a gateway for the business community to gain access to the organization's contracts and allows the organization to follow the acquisition cycle at every step. The database is designed to serve as a center for all communication for any service vendor seeking to do business with the organization. At any time an administrator can visit the repository to look for approved contractors and review their performance on past projects, with the intention of seeking proposals for work via an automated process. For more information, please direct your web browser to *http://sbo.od.nih.gov/epicfactsheet.pdf.*

Dated: August 20, 2001.

Jack Spiegel,

Director, Division of Technology Development and Transfer, Office of Technology Transfer, National Institutes of Health.

[FR Doc. 01–21780 Filed 8–28–01; 8:45 am]

BILLING CODE 4140–01–P

DEPARTMENT OF HEALTH AND HUMAN SERVICES

National Institutes of Health

National Cancer Institute; Notice of Closed Meeting

Pursuant to section 10(d) of the Federal Advisory Committee Act, as amended (5 U.S.C. Appendix 2), notice is hereby given of the following meeting.

The meeting will be closed to the public in accordance with the provisions set forth in sections 552b(c)(4) and 552b(c)(6), Title 5 U.S.C., as amended. The grant applications and the discussions could disclose confidential trade secrets or commercial property such as patentable material, and personal information concerning individuals associated with the grant applications, the disclosure of which would constitute a clearly unwarranted invasion of personal privacy.

Name of Committee: National Cancer Institute Special Emphasis Panel, Program Project Application.

Date: October 3–5, 2001.

Time: 5 p.m. to 12 p.m.

Agenda: To review and evaluate grant applications.

Place: Holiday Inn—Georgetown, 2101 Wisconsin Avenue, N.W., Washington, DC 20007.

Contact Person: Raymond A. Petryshyn, PhD, Scientific Review Administrator, Grants Review Branch, Division of Extramural Activities, National Cancer Institute, National Institutes of Health, 6116 Executive Blvd., 8th Fl. Room 8133, Bethesda, MD 20892, 301/594–1216.

Any interested person may file written comments with the committee by forwarding the statement to the Contact Person listed on this notice. The statement should include the name, address, telephone number and when applicable, the business or professional affiliation of the interested person.

(Catalogue of Federal Domestic Assistance Program Nos. 93.392, Cancer Construction; 93.393, Cancer Cause and Prevention Research; 93.394, Cancer Detection and Diagnosis Research; 93.395, Cancer Treatment Research; 93.396, Cancer Biology Research; 93.397, Cancer Centers Support; 93.398, Cancer Research Manpower; 93.399, Cancer Control, National Institutes of Health, HHS)

Dated: August 21, 2001.

Laverne Y. Stringfield,

Director, Office of Federal Advisory Committee Policy.

[FR Doc. 01–21771 Filed 8–28–01; 8:45 am]

BILLING CODE 4140–01–M

DEPARTMENT OF HEALTH AND HUMAN SERVICES

National Institutes of Health

National Cancer Institute; Notice of Closed Meeting

Pursuant to section 10(d) of the Federal Advisory Committee Act, as amended (5 U.S.C. Appendix 2), notice is hereby given of the following meeting.

The meeting will be closed to the public in accordance with the provisions set forth in sections 552b(c)(4) and 552b(c)(6), Title 5 U.S.C., as amended. The grant applications and the discussions could disclose confidential trade secrets or commercial

property such as patentable material, and personal information concerning individuals associated with the grant applications, the disclosure of which would constitute a clearly unwarranted invasion of personal privacy.

Name of Committee: National Cancer Institute Special Emphasis Panel, Review and Analysis of Tobacco Industry Documents.

Date: September 14, 2001.

Time: 8:30 a.m. to 2:30 p.m.

Agenda: To review and evaluate grant applications.

Place: Holiday Inn, 5520 Wisconsin Ave, Chevy Chase, MD 20815.

Contact Person: Gerald G. Lovinger, PhD., Scientific Review Administrator, Grants Review Branch, Division of Extramural Activities, National Cancer Institute, National Institutes of Health, 6116 Executive Boulevard, Room 8101, Rockville, MD 20892–7405, 301/496–7987.

Any interested person may file written comments with the committee by forwarding the statement to the Contact Person listed on this notice. The statement should include the name, address, telephone number and when applicable, the business or professional affiliation of the interested person.

(Catalogue of Federal Domestic Assistance Program Nos. 93.392, Cancer Construction; 93.393, Cancer Cause and Prevention Research; 93.394, Cancer Detection and Diagnosis Research; 93.395, Cancer Treatment Research; 93.396, Cancer Biology Research; 93.397, Cancer Centers Support; 93.398, Cancer Research Manpower; 93.399, Cancer Control, National Institutes of Health, HHS)

Dated: August 21, 2001.

LaVerne Y. Stringfield,

Director, Office of Federal Advisory Committee Policy.

[FR Doc. 01–21772 Filed 8–28–01; 8:45 am]

BILLING CODE 4140–01–M

DEPARTMENT OF HEALTH AND HUMAN SERVICES

National Institutes of Health

National Center for Complementary and Alternative Medicine; Notice of Meeting

Pursuant to section 10(d) of the Federal Advisory Committee Act, as amended (5 U.S.C. Appendix 2), notice is hereby given of a meeting of the National Institute Council for Complementary and Alternative Medicine.

The meeting will be open to the public as indicated below, with attendance limited to space available. Individuals who plan to attend and need special assistance, such as sign language interpretation or other reasonable accommodations, should notify the Contact Person listed below in advance of the meeting.

The meeting will be closed to the public in accordance with the provisions set forth in sections 552b(c)(4) and 552b(c)(6), Title 5 U.S.C., as amended. The grant applications and the discussions could disclose confidential trade secrets or commercial property such as patentable material, and personal information concerning individuals associated with the grant applications, the disclosure of which would constitute a clearly unwarranted invasion of personal privacy.

Name of Committee: National Advisory Council for Complementary and Alternative Medicine.

Date: August 27, 2001.

Open: 8:30 a.m. to 5 p.m.

Agenda: The agenda will include a Center Initiative Update, an Interim Report of the White House Commission on CAM Policy, and other business of the Council.

Place: Neuroscience Conference Center, 6001 Executive Boulevard, Conference Room C and D, Rockville, MD 20852.

Closed: 3 p.m. to Adjournment.

Agenda: To review and evaluate grant applications.

Place: Neuroscience Conference Center, 6001 Executive Boulevard, Conference Room C and D, Rockville, MD 20852.

Contact Person: Jane F. Kinsel, National Center for Complimenary Medicine, National Institutes of Health, 9000 Rockville Pike, Building 31, Room 5B38, Bethesda, MD 20892, (301) 435–5042, kinselj@mail.nih.gov.

This notice is being published less than 15 days prior to the meeting due to the timing limitations imposed by the review and funding cycle.

Any interested person may file written comments with the committee by forwarding the statement to the Contact Person listed on this notice. The statement should include the name, address, telephone number and when applicable, the business or professional affiliation of the interested person.

Information is also available on the Institute's/Center's home page: nccam.nih.gov/nccam/an/advisory/index.html, where an agenda and any additional information for the meeting will be posted when available.

Dated: August 21, 2001.

LaVerne Y. Stringfield,

Director, Office of Federal Advisory Committee Policy.

[FR Doc. 01–21770 Filed 8–28–01; 8:45 am]

BILLING CODE 4140–01–M

DEPARTMENT OF HEALTH AND HUMAN SERVICES

National Institutes of Health

National Institute of Allergy and Infectious Diseases; Notice of Meetings

Pursuant to section 10(d) of the Federal Advisory Committee Act, as amended (5 U.S.C. Appendix 2), notice is hereby given of meetings of the National Advisory of Allergy and Infectious Diseases Council.

The meetings will be open to the public as indicated below, with attendance limited to space available. Individuals who plan to attend and need special assistance, such as sign language interpretation or other reasonable accommodations, should notify the Contact Person listed below in advance of the meeting.

The meetings will be closed to the public in accordance with the provisions set forth in sections 552b(c)(4) and 552b(c)(6), Title 5 U.S.C., as amended. The grant applications and the discussions could disclose confidential trade secrets or commercial property such as patentable material, and personal information concerning individuals associated with the grant applications, the disclosure of which would constitute a clearly unwarranted invasion of personal privacy.

Name of Committee: National Advisory Allergy and Infectious Diseases Council Allergy, Immunology and Transplantation Subcommittee.

Date: September 24, 2001.

Closed: 8:30 AM to 11 AM.

Agenda: To review and evaluate grant applications.

Place: Natcher Building, 45 Center Drive, Bethesda, MD 20892.

Open: 12:15 PM to adjournment.

Agenda: Open program advisory discussions and presentations.

Place: Natcher Building, 45 Center Drive, Bethesda, MD 20892.

Contact Person: John J. McGowan, Director, Division of Extramural Activities, NIAID, Room 2142, 6700–B Rockledge Drive, MSC 7610, Rockville, MD 20892–7610, 301–496–7291.

Name of Committee: National Advisory Allergy and Infectious Diseases Council Microbiology and Infectious Diseases Subcommittee.

Date: September 24, 2001.

Closed: 8:30 AM to 11 AM.

Agenda: To review and evaluate grant applications.

Place: Natcher Building, 45 Center Drive, Conference Room F1/F2, Bethesda, MD 20892.

Open: 12:15 PM to adjournment.

Agenda: Open program advisory discussions and presentations.

Place: Natcher Building, 45 Center Drive, Conference Room F1/F2, Bethesda, MD 20892.

Contact Person: John J. McGowan, Director, Division of Extramural Activities, NIAID, Room 2142, 6700–B Rockledge Drive, MSC 7610, Rockville, MD 20892–7610, 301–496–7291.

Name of Committee: National Advisory Allergy and Infectious Diseases Council Acquired Immunodeficiency Syndrome Subcommittee.

Date: September 24, 2001.

Closed: 8:30 AM to 11 AM.

Agenda: To review and evaluate grant applications.

Place: Natcher Building, Conference Room A, 45 Center Drive, Bethesda, MD 20892.

Open: 12:15 PM to adjournment.

Agenda: Open program advisory discussions and presentations.

Place: Natcher Building, 45 Center Drive, Conference Rooms E1/E2, Bethesda, MD 20892.

Contact Person: John J. McGowan, Director, Division of Extramural Activities, NIAID, Room 2142, 6700–B Rockledge Drive, MSC 7610, Rockville, MD 20892–7610, 301–496–7291.

Name of Committee: National Advisory Allergy and Infectious Diseases Council.

Date: September 24, 2001.

Open: 11 a.m. to 12 p.m.

Agenda: The meeting of the full Council will be open to the public for general discussion and program presentations.

Place: Natcher Building, 45 Center Drive, Conference Rooms E1/E2, Bethesda, MD 20892.

Closed: 12 p.m. to 12:15 p.m.

Agenda: To review and evaluate grant applications.

Place: Natcher Building, 45 Center Drive, Conference Rooms E1/E2, Bethesda, MD 20892.

Contact Person: John J. McGowan, Director, Division of Extramural Activities, NIAID, Room 2142, 6700–B Rockledge Drive, MSC 7610, Rockville, MD 20892–7610, 301–496–7291.

Information is also available on the Institute's/Center's home page: *www.niaid.nih.gov/facts/facts.htm*, where an agenda and any additional information for the meeting will be posted when available.

(Catalogue of Federal Domestic Assistance Program Nos. 93.855, Allergy, Immunology, and Transplantation Research; 93.856, Microbiology and Infectious Diseases Research, National Institutes of Health, HHS)

Dated: August 22, 2001.

LaVerne Y. Stringfield,

Director, Office of Federal Advisory Committee Policy.

[FR Doc. 01–21773 Filed 8–28–01; 8:45 am]

BILLING CODE 4140–01–M

DEPARTMENT OF HEALTH AND HUMAN SERVICES

National Institutes of Health

National Institute on Aging; Notice of Meeting

Pursuant to section 10(d) of the Federal Advisory Committee Act, as amended (5 U.S.C. Appendix 2), notice is hereby given of a meeting of the National Advisory Council on Aging.

The meeting will be open to the public as indicated below, with attendance limited to space available. Individuals who plan to attend and need special assistance, such as sign language interpretation or other reasonable accommodations, should notify the Contact Person listed below in advance of the meeting.

The meeting will be closed to the public in accordance with the provisions set forth in sections 552b(c)(4) and 552b(c)(6), Title 5 U.S.C., as amended. The grant applications and the discussions could disclose confidential trade secrets or commercial property such as patentable material, and personal information concerning individuals associated with the grant applications, the disclosure of which would constitute a clearly unwarranted invasion of personal privacy.

Name of Committee: National Advisory Council on Aging.

Date: September 24–25, 2001.

Closed: September 24, 2001, 3 PM to 5 PM.

Agenda: To review and evaluate grant applications.

Place: National Institutes of Health, Building 1, Wilson Hall, 9000 Rockville Pike, Bethesda, MD 20892.

Open: September 25, 2001, 8 AM to Adjournment.

Agenda: Call to Order; Task Force on Minority Aging Research Report; Clinical Investigators Working Group Report; Program Highlights; and Working Group on Program Report.

Place: National Institutes of Health, Building 1, Wilson Hall, 9000 Rockville Pike, Bethesda, MD 20892.

Contact Person: Miriam F. Kelty, PHD, Director, Office of Extramural Affairs, National Institute on Aging, National Institutes of Health, 7201 Wisconsin Avenue, Suite 2C218, Bethesda, MD 20892, 301–496–9322.

Information is also available on the Institute's/Center's home page: *www.nih.gov/nia/naca.*, where an agenda and any additional information for the meeting will be posted when available.

(Catalogue of Federal Domestic Assistance Program Nos. 93.866, Aging Research, National Institutes of Health, HHS)

Dated: August 22, 2001.

LaVerne Y. Stringfield,

Director, Office of Federal Advisory Committee Policy.

[FR Doc. 01–21774 Filed 8–28–01; 8:45 am]

BILLING CODE 4140–01–M

DEPARTMENT OF HEALTH AND HUMAN SERVICES

National Institutes of Health

National Institute on Drug Abuse; Notice of Closing Meeting

Pursuant to section 10(d) of the Federal Advisory Committee Act, as amended (5 U.S.C. Appendix 2), notice is hereby given of the following meeting.

The meeting will be closed to the public in accordance with the provisions set forth in sections 552b(c)(4) and 552b(c)(6), Title 5 U.S.C., as amended. The grant applications and the discussions could disclose confidential trade secrets or commercial property such as patentable material, and personal information concerning individuals associated with the grant applications, the disclosure of which would constitute a clearly unwarranted invasion of personal privacy.

Name of Committee: National Institute on Drug Abuse Special Emphasis Panel. The Transition from Drug Use to Addiction: Unearthing the Switch.

Date: August 27, 2001.

Time: 2:30 PM to 4:30 PM.

Agenda: To review and evaluate grant applications.

Place: Neuroscience Center, National Institutes of Health, 6001 Executive Blvd., Rockville, MD 20852, (Telephone Conference Call).

Contact Person: Mark R. Green, PhD, Chief, Ceasrb, Office of Extramural Affairs, National Institute on Drug Abuse, National Institutes of Health, DHHS, Suite 3158, 6001 Executive Boulevard, Bethesda, MD 20892–9547, (301) 435–1431.

This notice is being published less than 15 days prior to the meeting due to the timing limitations imposed by the review and funding cycle.

(Catalogue of Federal Domestic Assistance Program Nos. 93.277, Drug Abuse Scientist Development Award for Clinicians, Scientist Development Awards, and Research Scientist Awards; 93.278, Drug Abuse National Research Service Awards for Research Training; 93.279, Drug Abuse Research Programs, National Institutes of Health, HHS)

Dated: August 22, 2001.

LaVerne Y. Stringfield,

Director, Office of Federal Advisory Committee Policy.

[FR Doc. 01–21776 Filed 8–28–01; 8:45 am]

BILLING CODE 4140–01–M

DEPARTMENT OF HEALTH AND HUMAN SERVICES

National Institutes of Health

National Institute of Environmental Health Sciences; Notice of Closed Meeting

Pursuant to section 10(d) of the Federal Advisory Committee Act, as amended (5 U.S.C. Appendix 2), notice is hereby given of the following meeting.

The meeting will be closed to the public in accordance with the provisions set forth in sections 552b(c)(4) and 552b(c)(6), Title 5 U.S.C., as amended. The contract proposals and the discussions could disclose confidential trade secrets or commercial property such as patentable material, and personal information concerning individuals associated with the contract proposals, the disclosure of which would constitute a clearly unwarranted invasion of personal privacy.

Name of Committee: National Institute of Environmental Health Sciences Special Emphasis Panel Studies to Evaluate the Toxicologic & Carcinogenic Potential of Chemical Via Inhalation for the National Toxicology Program (RFP NIH–ES–01–13).

Date: September 14, 2001.

Time: 1 p.m. to 5 p.m.

Agenda: To review and evaluate contract proposals.

Place: NIEHS-East Campus, 79 T W Alexander Dr., Bldg. 4401, Rm EC–122, Research Triangle Park, NC 27709, (Telephone Conference Call).

Contact Person: Linda K. Bass, PHD, Scientific Review Administrator, Scientific Review Branch, Office of Program Operations, Division of Extramural Research and Training, Nat. Institute of Environmental Health Sciences, P.O. Box 12233, MD EC–30, Research Triangle Park, NC 27709, 919–541–1307.

This notice is being published less than 15 days prior to the meeting due to the timing limitations imposed by the review and funding cycle.

(Catalogue of Federal Domestic Assistance Program Nos. 93.113, Biological Response to Environmental Health Hazards; 93.114, Applied Toxicological Research and Testing; 93.115, Biometry and Risk Estimation—Health Risks from Environmental Exposures; 93.142, NIEHS Hazardous Waste Worker Health and Safety Training; 93.143, NIEHS Superfund Hazardous Substances—Basic Research and Education; 93.894, Resources and Manpower Development in the Environmental Health Sciences, National Institutes of Health, HHS)

Dated: August 22, 2001.

LaVerne Y. Stringfield,

Director, Office of Federal Advisory Committee Policy.

[FR Doc. 01–21777 Filed 8–28–01; 8:45 am]

BILLING CODE 4140–01–M

DEPARTMENT OF HEALTH AND HUMAN SERVICES

National Institutes of Health

Clinical Center; Notice of Meeting

Pursuant to section 10(a) of the Federal Advisory Committee Act, as amended (5 U.S.C. Appendix 2), notice is hereby given of a meeting of the Board of Governors of the Warren Grant Magnuson Clinical Center.

The meeting will be open to the public, with attendance limited to space available. Individuals who plan to attend and need special assistance, such as sign language interpretation or other reasonable accommodations, should notify the Contact Person listed below in advance of the meeting.

Name of Committee: Board of Governors of the Warren Grant Magnuson Clinical Center.

Date: September 14, 2001.

Time: 9 AM to 12 PM.

Agenda: For discussion of planning, operational, and clinical research issues.

Place: National Institutes of Health, Clinical Center Medical Board Room, 2C116, 9000 Rockville Pike, Bethesda, MD 20892.

Contact Person: Maureen E Gormley, Executive Secretary, Warren Grant Magnuson Clinical Center, National Institutes of Health, Building 10, Room 2C146, Bethesda, MD 20892, 301/496–2897.

Information is also available on the Institute's/Center's home page: *www.cc.nih.gov/*, where an agenda and any additional information for the meeting will be posted when available.

Dated: August 22, 2001.

LaVerne Y. Stringfield,

Director, Office of Federal Advisory Committee Policy.

[FR Doc. 01–21775 Filed 8–28–01; 8:45 am]

BILLING CODE 4140–01–M

DEPARTMENT OF HEALTH AND HUMAN SERVICES

National Institutes of Health

Prospective Grant of Exclusive License: Treatment of Cancer, Osteoporosis or any Disease Involving Unwanted or Dysregulated Angiogenesis

AGENCY: National Institutes of Health, Public Health Service, DHHS.

ACTION: Notice.

SUMMARY: This is notice, in accordance with 35 U.S.C. 209(c)(1) and 37 CFR 404.7(a)(1)(i), that the National Institutes of Health, Department of Health and Human Services, is contemplating the grant of an exclusive license worldwide to practice the invention embodied in the Provisional Patent Application No. 60/220,270, entitled ''Biologically Active Macrolides, Compositions and Uses Thereof'', filed July 24, 2000, to Attenuon LLC, a U.S. corporation located at 10130 Sorrento Valley Rd. Suite B, San Diego, CA 92121. The patent rights of this invention have been assigned to the United States of America. The proposed field of use may be limited to the treatment of cancer, osteoporosis or any disease involving unwanted or dysregulated angiogenesis.

DATES: Only written comments and/or applications for a license received by the NIH Office of Technology Transfer on or before October 29, 2001 will be considered.

ADDRESSES: Requests for a copy of the patent application, inquiries, comments and other materials relating to the contemplated license should be directed to: Wendy R. Sanhai, Ph.D., Technology Licensing Specialist, Office of Technology Transfer, National Institutes of Health, 6011 Executive Boulevard, Suite 325, Rockville, MD 20852–3804; Telephone: (301) 496–7736 ext. 244; Facsimile: (301) 402–0220; E-mail: sanhaiw@od.nih.gov. A signed Confidential Disclosure Agreement will be required to receive copies of the patent application.

SUPPLEMENTARY INFORMATION: The invention describes the identification of a novel class of polyunsaturated macrolides called the chondropsins. They are implicated in processes relating to cellular proliferation, angiogenesis, tumor cell invasiveness, metastasis and drug resistance.

The prospective exclusive license territory will be worldwide and will be royalty-bearing. Said license may be granted within sixty (60) days from the date of this published notice unless the NIH receives written evidence and argument establishing that granting this license is inconsistent with the terms and conditions of 35 U.S.C. 209(c)(1) and 37 CFR 404.7(a)(1)(i).

Since the chondropsins were first reported from an Australian collection, the prospective licensee will be required to comport with all applicable federal and country-of-collection policies relating to biodiversity. The prospective licensee will, therefore, be obligated to negotiate and enter into an agreement with the Australian Institute of Marine

Science (AIMS) in Townsville, Queensland.

Properly filed competing applications for a license filed in response to this notice will be treated as objections to the contemplated license. Comments and objections submitted in response to this notice will not be made available for public inspection, and, to the extent permitted by law, will not be released under the Freedom of Information Act, 5 U.S.C. 552.

Dated: August 23, 2001.

Jack Spiegel,

Director, Division of Technology Development and Transfer, Office of Technology Transfer.

[FR Doc. 01–21779 Filed 8–28–01; 8:45 am]

BILLING CODE 4140–01–P

DEPARTMENT OF HEALTH AND HUMAN SERVICES

Substance Abuse and Mental Health Services Administration

Center for Substance Abuse Treatment; Notice of Meeting

Pursuant to Pub. L. 92–463, notice is hereby given of a meeting of the Center for Substance Abuse Treatment (CSAT) National Advisory Council to be held in September 2001. A portion of the meeting is open and includes discussion of the Center's policy issues and current administrative, legislative, and program developments. The Council will hear feature presentations by SAMHSA Acting Administrator Joseph H. Autry III, M.D. and CSAT Director H. Westley Clark, M.D., J.D., M.P.H., CAS, FASAM. Significant issues to be discussed with the Council include the Health Insurance Portability Act and its impact on substance abuse; an information exchange on the New Freedom Initiative; status reports on HIV/AIDS; OPIOID Accreditation; CSAT's Faith and Community Partners Initiative; Healthcare Professional Impairment; and Health Disparities. Other anticipated discussions include Confidentiality Regulations and Parity.

If special accommodations are needed for persons with disabilities, please notify the Contact listed below.

The meeting will also include the review, discussion, and evaluation of grant applications. Therefore a portion of the meeting will be closed to the public as determined by the Administrator, SAMHSA, in accordance with Title 5 U.S.C. 552b(c), and (6) and 5 U.S.C. App. 2, § 10(d).

Substantive program information, a summary of the meeting and roster of Council members may be obtained from the contact listed below.

Committee Name: Center for Substance Abuse Treatment, National Advisory Council.

Meeting Date: September 12, 2001—8:30 a.m.–5:00 p.m., September 13, 2001—9:00 a.m.–1:00 p.m.

Place: Bethesda Hyatt Hotel, One Bethesda Metro, Bethesda, Maryland 20814.

Type: Closed: September 12, 2001—8:30 a.m.–9:30 a.m.; Open: September 12, 2001—9:30 a.m.–5:00 p.m., September 13, 2001—9:00 a.m.–1:00 p.m.

Contact: Cynthia Graham, 5600 Fishers Lane, RW II, Ste 618, Rockville, MD 20857, Telephone: (301) 443–8923; FAX: (301) 480–6077, E-mail: cgraham@samhsa.gov.

Dated: August 22, 2001.

Toian Vaughn,

Committee Management Officer, Substance Abuse and Mental Health Services Administration.

[FR Doc. 01–21782 Filed 8–28–01; 8:45 am]

BILLING CODE 4162–20–P

DEPARTMENT OF THE INTERIOR

Fish and Wildlife Service

Notice of Receipt of Applications for Permit

Endangered Species

The public is invited to comment on the following application(s) for a permit to conduct certain activities with endangered species. This notice is provided pursuant to Section 10(c) of the Endangered Species Act of 1973, as amended (16 U.S.C. 1531, *et seq.*). Written data, comments, or requests for copies of these complete applications should be submitted to the Director (address below) and must be received within 30 days of the date of this notice.

PRT–046907

Applicant: David Andersen, Omaha, NE

The applicant request a permit to import the sport-hunted trophy of one male bontebok (*Damaliscus pygargus dorcas*) culled from a captive herd maintained under the management program of the Republic of South Africa, for the purpose of enhancement of the survival of the species.

PRT–046908

Applicant: Harold W. Andersen, Omaha, NE

The applicant request a permit to import the sport-hunted trophy of one male bontebok (*Damaliscus pygargus dorcas*) culled from a captive herd maintained under the management program of the Republic of South Africa, for the purpose of enhancement of the survival of the species.

PRT–041162

Applicant: International Animal Exchange, Ferndale, MI

The applicant requests a permit to purchase and resell in foreign commerce 3.1 cheetah (*Acinonyx jubatus*) from the Hoedspruit Research and Breeding Center, Waterkloof, South Africa to the Fuji Safari Park/Koizumi African Lion Safari Co., Ltd., Shizuoka-Ken, Japan for the purpose of enhancement of the survival of the species through captive propagation and conservation education.

PRT—046986

Applicant: Minnesota Zoological Garden, Apple Valley, MN

The applicant requests a permit to re-export one male Komodo Island monitor (*Varanus komodoensis*) of wild origin to Toronto Zoo, Ontario, Canada for the purpose of enhancement of the survival of the species through captive propagation.

Marine Mammals

The public is invited to comment on the following application(s) for a permit to conduct certain activities with marine mammals. The application(s) was submitted to satisfy requirements of the Marine Mammal Protection Act of 1972, as amended (16 U.S.C. 1361 *et seq.*) and the regulations governing marine mammals (50 CFR 18).

Written data, comments, or requests for copies of these complete applications or requests for a public hearing on these applications should be submitted to the Director (address below) and must be received within 30 days of the date of this notice. Anyone requesting a hearing should give specific reasons why a hearing would be appropriate. The holding of such a hearing is at the discretion of the Director.

PRT–043735

Applicant: Thomas Edward Ferry, Ponca, NE

The applicant requests a permit to import a polar bear (*Ursus maritimus*) sport hunted from the Viscount Melville polar bear population in Canada for personal use. On June 15, 2001 [66 FR 32636], the permit request was mistakenly published as a sport-hunted bear from the Northern Beaufort Sea population.

PRT–044833

Applicant: Jack A. Wilkinson, Kalispell, MT

The applicant requests a permit to import a polar bear (*Ursus maritimus*) sport hunted from the Southern Beaufort Sea polar bear population in Canada for personal use. On July 11, 2001 [66 FR 36296], the permit request was mistakenly published as a sport-

hunted bear from the Northern Beaufort Sea population.

PRT–046899

Applicant: Andy Krook, New Ipswich, NH

The applicant requests a permit to import a polar bear (*Ursus maritimus*) sport hunted from the Southern Beaufort Sea polar bear population in Canada for personal use.

The U.S. Fish and Wildlife Service has information collection approval from OMB through March 31, 2004, OMB Control Number 1018–0093. Federal Agencies may not conduct or sponsor and a person is not required to respond to a collection of information unless it displays a current valid OMB control number.

Documents and other information submitted with these applications are available for review, subject to the requirements of the Privacy Act and Freedom of Information Act, by any party who submits a written request for a copy of such documents within 30 days of the date of publication of this notice to: U.S. Fish and Wildlife Service, Division of Management Authority, 4401 North Fairfax Drive, Room 700, Arlington, Virginia 22203, telephone 703/358–2104 or fax 703/358–2281.

Dated: August 17, 2001.

Anna Barry,

Senior Permit Biologist, Branch of Permits, Office of Management Authority.

[FR Doc. 01–21768 Filed 8–28–01; 8:45 am]

BILLING CODE 4310–55–P

DEPARTMENT OF THE INTERIOR

Roosevelt Habitat Conservation Plan (RHCP) for Gila and Maricopa Counties, Arizona

AGENCY: U.S. Fish and Wildlife Service, Department of the Interior.

ACTION: Notice of intent to prepare an Environmental Impact Statement (EIS) and notice of public scoping meeting related to the Roosevelt Habitat Conservation Plan (RHCP).

SUMMARY: Pursuant to the National Environmental Policy Act (NEPA), this notice advises the public that the U.S. Fish and Wildlife Service (Service) intends to prepare an EIS to evaluate the impacts of and alternatives for the possible issuance of an incidental take permit (ITP), pursuant to section 10(a)(1)(B) of the Endangered Species Act of 1973, as amended (Act), to the Salt River Project (SRP). SRP proposes to be an applicant for an ITP, through development and implementation of the RHCP, as required by the Act for issuance of an ITP. The RHCP will provide the measures to minimize and mitigate the effects of the proposed taking of listed and sensitive species and the habitats upon which they depend.

DATES AND ADDRESSES: Written comments on alternatives and issues to be addressed in the EIS are requested by November 22, 2001, and should be sent to Mr. David Harlow, Field Supervisor, U.S. Fish and Wildlife Service, 2321 West Royal Palm Road, Suite 103, Phoenix, AZ 85021 at 602/242–0210. Oral and written comments also will be accepted at a public scoping meeting to be held on October 22, 2001, 6–8 p.m. at the offices of the Salt River Project, 1521 Project Drive, Tempe, Arizona.

Written comments received by the Service become part of the public record associated with this action. Those comments, as well as the names and addresses of anyone who provides comments may and can be disclosed to requesters of information associated with this notice under the Freedom of Information Act.

FOR FURTHER INFORMATION ON THE EIS, CONTACT: On the EIS, Contact: Ms. Sherry Barrett, Assistant Field Supervisor, Tucson Suboffice, U.S. Fish and Wildlife Service, 300 West Congress, Room 6J, Tucson, AZ 85701 at 520/670–4617, or Mr. Jim Rorabaugh, Arizona State Office, U.S. Fish and Wildlife Service, 2321 West Royal Palm Road, Suite 103, Phoenix, AZ 85021 at 602/242–0210.

For further information on the RHCP, Contact: Mr. John Keane, Executive Environmental Policy Analyst, Salt River Project, P.O. Box 52025, PAB355, Phoenix, AZ 85072–2025 at 602/236–5087, or Mr. Steve Dougherty, Senior Ecologist, ERO Resources Corporation, 1842 Clarkson Street, Denver, CO 80218 at 303/830–1188.

SUPPLEMENTARY INFORMATION: This notice advises the public that the Service intends to gather information necessary to determine impacts and formulate alternatives for the EIS related to the potential issuance of an ITP to SRP and the development and implementation of the RHCP, which will provide measures to minimize and mitigate the effects of the incidental take of federally listed species.

Background

Roosevelt Dam and reservoir (Roosevelt) is operated by SRP in conjunction with three other reservoirs on the Salt River and two reservoirs on the Verde River as integral features of the Salt River Reclamation Project (Project), authorized by the Reclamation Act of 1902, and pursuant to a 1917 contract with the United States. Since completion in 1911, Roosevelt has provided water for power generation, irrigation, municipal and other uses. Currently, the reservoir system supplies water to more than 1.6 million people in the cities of Phoenix, Mesa, Chandler, Tempe, Glendale, Gilbert, Scottsdale, Tolleson, and Avondale. In addition, water is provided to irrigate agricultural lands within the Project and for other uses. Also, water is delivered to the Salt River Pima-Maricopa Indian Community, Fort McDowell Indian Community, Gila River Indian Community, Buckeye Irrigation Company, Roosevelt Irrigation District, Roosevelt Water Conservation District, and others. Roosevelt and the other SRP reservoirs also provide a variety of recreational uses and environmental benefits in central Arizona.

Due to dry conditions in central Arizona for the past several years, the reservoir level behind Roosevelt Dam has been below normal. As a result, riparian vegetation has invaded and flourished in the portion of the storage space historically used by SRP to store water for use in the Phoenix metropolitan area. Animals that use riparian habitat have followed the vegetation growth and now occupy areas within the reservoir. In particular, a population of southwestern willow flycatchers (*Empidonax traillii extimus*), which is listed as endangered under federal law, now occupies habitat within the storage space at Roosevelt. Thus, periodic refilling of the reservoir may adversely affect habitat used by the southwestern willow flycatcher and other sensitive species.

Purpose and Need for Action

Section 9 of the Act prohibits the ''taking'' of threatened and endangered species. The Service may, however, under limited circumstances, issue permits to take federally listed and candidate species, when such a taking is incidental to, and not the purpose of, otherwise lawful activities. Regulations governing permits for endangered species are at 50 CFR 17.22. The term ''take'' under the Act means to harass, harm, pursue, hunt, shoot, wound, kill, trap, capture, or collect, or attempt to engage in any such conduct. The proposed permit would allow approved incidental take associated with SRP's filling of the reservoir space and continued operation of Roosevelt, consistent with its purpose as a water storage and power generation facility.

Section 10(a)(1)(B) of the Act and regulations at 50 CFR 17.32 contain provisions for issuing ITPs to non-

federal entities for the take of endangered and threatened species, provided the following criteria are met:

1. The taking will be incidental;
2. The applicant will, to the maximum extent practicable, minimize and mitigate the impacts of such taking;
3. The applicant will develop a Habitat Conservation Plan (HCP) and ensure that adequate funding for the HCP will be provided;
4. The taking will not appreciably reduce the likelihood of the survival and recovery of the species in the wild; and
5. Any other measures that the Service may require as being necessary or appropriate for the purposes of the HCP to be met.

Proposed Action

The proposed action is the issuance of an ITP for listed and sensitive species for SRP's operation of Roosevelt, pursuant to section 10(a)(1)(B) of the Endangered Species Act of 1973, as amended. SRP will develop and implement the RHCP, as required by section 10(a)(1)(B) of the Endangered Species Act. The RHCP will provide measures to minimize and mitigate the effects of the proposed taking on listed and sensitive species and their habitats. The biological goal of the RHCP is to ensure that any take of listed species will not appreciably reduce the likelihood of the survival and recovery of the species.

As proposed, the ITP would enable SRP to continue the operation of Roosevelt to store and release water and to generate power.

SRP is expected to apply for an ITP for the following federally listed and candidate species: southwestern willow flycatcher (*Empidonax traillii extimus*), bald eagle (*Haliaeetus leucocephalus*), and the yellow-billed cuckoo (*Coccyzus americanus*).

SRP also is seeking to address and cover any other rare and/or sensitive species that may be affected by SRP's operation of Roosevelt. Unlisted species that are addressed as if they were listed, and that are found to be adequately conserved by the RHCP, will be automatically encompassed by the ITP should they be listed as federally threatened or endangered species at some time in the future. Other listed species for which SRP is not seeking permit coverage also may benefit from the conservation measures provided in the RHCP.

Alternatives

Alternatives currently being considered by the Service include the following:

1. *Proposed Action by the Service*—Issuance of an ITP by the Service authorizing the continued operation of Roosevelt by SRP with implementation of the RHCP involving measures to minimize and mitigate the potential take of federally listed species.
2. *No Action by the Service*—No issuance of an ITP by the Service; this would require SRP to do everything within its control to avoid any take of federally listed species associated with its continued operation of Roosevelt.
3. *Other Section 10 Alternatives*—Issuance of an ITP by the Service for the RHCP involving modifications to operation of Roosevelt and SRP's other reservoirs on the Salt and Verde Rivers along with additional measures to minimize and mitigate the potential take of federally listed species. It is anticipated that the EIS will include one or two reservoir operation alternatives that fall in the range between the Proposed Action and the No Action by the Service.
4. *Section 7 Consultation*—This alternative would involve reinitiation of consultation on Roosevelt under Section 7 of the Act. The Service completed a consultation with the Bureau of Reclamation in 1996 involving the additional reservoir capacity created by construction at Roosevelt.

Additional Information

It is anticipated that SRP will request a permit duration of 50 years. Implementation of the RHCP will result in the establishment of measures that will provide for the conservation of covered species and their habitats in perpetuity. Research and monitoring, in combination with adaptive management, will be used to facilitate accomplishment of these goals.

The Service will conduct an environmental review that analyzes the proposed action, as well as a range of reasonable alternatives and the associated impact of each. The EIS will be the basis for the Service's evaluation of impacts to the species and to the environment, and the range of alternatives to be evaluated. The EIS is expected to provide biological descriptions of species and habitats and the effects of the proposed action on: vegetation, wetlands, wildlife, threatened or endangered species and species of concern, geology and soils, visual resources, air quality, water resources, flood control, water quality, archaeology, historic structures, traditional cultural properties, land use, recreation, hydropower, water use, local economy, and environmental justice.

Comments and suggestions are invited from all interested parties to ensure that a range of issues and alternatives related to the proposed action are identified. The review of this project will be conducted according to the requirements of the National Environmental Policy Act of 1969, as amended (42 U.S.C. 4321 *et seq.*), National Environmental Policy Act Regulations (40 CFR parts 1500–1508), and other appropriate federal laws, regulations, policies and guidance.

Related Project Documentation

It is anticipated that the EIS process will make full use (including incorporation by reference, as appropriate, pursuant to NEPA) of documents prepared by other entities regarding the environmental and socioeconomic issues in the project area, copies of which will be available for public inspection at the office of Mr. John Keane, Executive Environmental Policy Analyst, Salt River Project, P.O. Box 52025, PAB355, Phoenix, AZ 85072–2025 at 602/236–5087.

After the environmental review is completed, the Service will publish a notice of availability and a request for comment on the draft EIS and SRP's permit application, which will include the RHCP.

The draft EIS is expected to be completed by January 2002.

Dated: August 21, 2001.

Bryan Arroyo,

Acting Regional Director, Southwest Region, Albuquerque, New Mexico.

[FR Doc. 01–21743 Filed 8–28–01; 8:45 am]

BILLING CODE 4310–55–P

DEPARTMENT OF THE INTERIOR

Fish and Wildlife Service

Notice of Issuance of Permit for Marine Mammals

On May 22, 2001, a notice was published in the **Federal Register** [volume 66] FR (28196), that an application had been filed with the Fish and Wildlife Service by John L. Van Horn, for a permit (PRT–042638) to import one polar bear taken from the McClintock Channel population, Canada in April 2000 for personal use.

Notice is hereby given that on August 2, 2001, as authorized by the provisions of the Marine Mammal Protection Act of 1972, as amended (16 U.S.C. 1361 *et seq.*) the Fish and Wildlife Service authorized the requested permit subject to certain conditions set forth therein.

On May 22, 2001, a notice was published in the **Federal Register** [volume 66] FR (28196), that an application had been filed with the Fish

and Wildlife Service by Danny M. Spindler for a permit (PRT–042635) to import one polar bear taken from the Lancaster Sound population, Canada for personal use.

Notice is hereby given that on August 7, 2001, as authorized by the provisions of the Marine Mammal Protection Act of 1972, as amended (16 U.S.C. 1361 *et seq.*) the Fish and Wildlife Service authorized the requested permit subject to certain conditions set forth therein.

On June 6, 2001, a notice was published in the **Federal Register** [volume 66] FR (30476), that an application had been filed with the Fish and Wildlife Service by Charles F. Mervar for a permit (PRT–043244) to import one polar bear taken from the Lancaster Sound population, Canada for personal use.

Notice is hereby given that July 30, 2001, as authorized by the provisions of the Marine Mammal Protection Act of 1972, as amended (16 U.S.C. 1361 *et seq.*) the Fish and Wildlife Service authorized the requested permit subject to certain conditions set forth therein.

Documents and other information submitted for thEse applications are available for review by any party who submits a written request to the U.S. Fish and Wildlife Service, Division of Management Authority, 4401 North Fairfax Drive, Room 700, Arlington, Virginia 22203, telephone (703) 358–2104 or fax (703) 358–2281.

Dated: August 17, 2001.

Anna Barry,

Senior Permit Biologist, Branch of Permits, Division of Management Authority.

[FR Doc. 01–21767 Filed 8–28–01; 8:45 am]

BILLING CODE 4310–55–P

INTERNATIONAL TRADE COMMISSION

[Investigations Nos. 731–TA–951–952 (Preliminary)]

Blast Furnace Coke From China and Japan

Determinations

On the basis of the record [1] developed in the subject investigations, the United States International Trade Commission (Commission) determines,[2] pursuant to section 733(a) of the Tariff Act of 1930 (19 U.S.C. 1673b(a)) (the Act), that there is no reasonable indication that an industry in the United States is materially injured or threatened with material injury, or that the establishment of an industry in the United States is materially retarded, by reason of imports from China and Japan of blast furnace coke, provided for in subheading 2704.00.0025 of the Harmonized Tariff Schedule of the United States, that are alleged to be sold in the United States at less than fair value (LTFV).

Background

On June 29, 2001, a petition was filed with the Commission and the United States Department of Commerce (Commerce) by the Committee for Fair Coke Trade,[3] and the United Steelworkers of America, AFL–CIO, Pittsburgh, PA, alleging that an industry in the United States is materially injured or threatened with material injury by reason of LTFV imports of blast furnace coke from China and Japan. Accordingly, effective June 29, 2001, the Commission instituted antidumping duty investigations Nos. 731–TA–951–952 (Preliminary).

Notice of the institution of the Commission's investigations and of a public conference to be held in connection therewith was given by posting copies of the notice in the Office of the Secretary, U.S. International Trade Commission, Washington, DC, and by publishing the notice in the **Federal Register** of July 6, 2001 (66 FR 35669). The conference was held in Washington, DC, on July 20, 2001, and all persons who requested the opportunity were permitted to appear in person or by counsel.

The Commission transmitted its determinations in these investigations to the Secretary of Commerce on August 13, 2001. The views of the Commission are contained in USITC Publication 3444 (August 2001), entitled *Blast Furnace Coke From China and Japan: Investigations Nos. 731–TA–951–952 (Preliminary).*

Issued: August 24, 2001.

By order of the Commission.

Donna R. Koehnke,

Secretary.

[FR Doc. 01–21801 Filed 8–28–01; 8:45 am]

BILLING CODE 7020–02–P

[1] The record is defined in sec. 207.2(f) of the Commission's Rules of Practice and Procedure (19 CFR 207.2(f)).

[2] Commissioners Lynn M. Bragg and Marcia E. Miller dissenting. Vice Chairman Deanna Tanner Okun not participating.

[3] Members of the committee are: Acme Steel Co., Chicago, IL; DTE Energy Services Inc., Ann Arbor, MI; Koppers Industries, Inc., Pittsburgh, PA; and Shenango Inc., Pittsburgh, PA.

INTERNATIONAL TRADE COMMISSION

[Investigation No. NAFTA–312–1]

Certain Steel Wire Rod

Determination

On the basis of the information in the investigation, the Commission determines [1] that a surge in imports of certain steel wire rod from Canada and Mexico, respectively, undermines the effectiveness of the import relief on wire rod provided for in Presidential Proclamation 7273 of February 16, 2000.

Background

Following receipt of a request filed on July 24, 2001, on behalf of Co-Steel Raritan, GS Industries, Inc., Keystone Steel & Wire Company, and North Star Steel Texas Inc., the Commission instituted investigation No. NAFTA–312–1 under section 312(c)(2) of the North American Free Trade Agreement Implementation Act (19 U.S.C. 3372(c)(2)) to determine whether a surge in U.S. imports of certain steel wire rod from Canada and/or Mexico undermines the effectiveness of the import relief on wire rod provided for in Presidential Proclamation 7273 of February 16, 2000 (65 FR 8624, February 18, 2000).

Notice of the institution of the Commission's investigation and of the scheduling of a staff conference to be held in connection therewith was given by posting copies of the notice in the Office of the Secretary, U.S. International Trade Commission, Washington, DC, and by publishing the notice in the **Federal Register** of August 3, 2001 (66 F.R. 40722). The staff conference was held in Washington, DC, on August 8, 2001; all persons who requested the opportunity were permitted to appear in person or by counsel.

The Commission submitted its findings to the President on August 23, 2001, and will transmit its written views to the President on September 7, 2001.

By order of the Commission.

Issued: August 24, 2001.

Donna R. Koehnke,

Secretary.

[FR Doc. 01–21800 Filed 8–28–01; 8:45 am]

BILLING CODE 7020–02–P

[1] Vice Chairman Okun and Commissioner Hillman dissenting.

JUDICIAL CONFERENCE OF THE UNITED STATES

Meeting of the Judicial Conference Committee on Rules of Practice and Procedure

AGENCY: Judicial Conference of the United States Committee on Rules of Practice and Procedure.

ACTION: Notice of open meeting.

SUMMARY: The Committee on Rules of Practice and Procedure will hold a two-day meeting. The meeting will be open to public observation but not participation.

Date: January 10–11, 2002.

Time: 8:30 a.m. to 5 p.m.

Address: Loews Ventana Canyon, 7000 North Resort Drive, Tucson, AZ.

FOR FURTHER INFORMATION CONTACT: John K. Rabiej, Chief, Rules Committee Support Office, Administrative Office of the United States Courts, Washington, DC 20544, telephone (202) 502–1820.

Dated: August 22, 2001.

John K. Rabiej,

Chief, Rules Committee Support Office.

[FR Doc. 01–21726 Filed 8–28–01; 8:45 am]

BILLING CODE 2210–55–M

JUDICIAL CONFERENCE OF THE UNITED STATES

Meeting of the Judicial Conference Advisory Committee on Rules of Civil Procedure

AGENCY: Judicial Conference of the United States Advisory Committee on Rules of Civil Procedure.

ACTION: Notice of open meeting.

SUMMARY: The Advisory Committee on Rules of Civil Procedure will hold a two-day meeting on proposals to amend Civil Rule 23. The meeting will be open to public observation but not participation.

Date and Time: October 22, 2001, from 10 a.m. to 5 p.m. October 23, 2001, from 8:45 a.m. to 4:30 p.m.

Address: University of Chicago Law School, 1111 East 60 Street, Chicago, Illinois.

FOR FURTHER INFORMATION CONTACT: John K. Rabiej, Chief, Rules Committee Support Office, Administrative Office of the United States Courts, Washington, DC 20544, telephone (202) 502–1820.

Dated: August 22, 2001.

John K. Rabiej,

Chief, Rules Committee Support Office.

[FR Doc. 01–21727 Filed 8–28–01; 8:45 am]

BILLING CODE 2210–55–M

JUDICIAL CONFERENCE OF THE UNITED STATES

Meeting of the Judicial Conference Advisory Committee on Rules of Criminal Procedure

AGENCY: Judicial Conference of the United States Advisory Committee on Rules of Criminal Procedure.

ACTION: Notice of opening meeting.

SUMMARY: The Advisory Committee on Rules of Criminal Procedure will hold a two-day meeting. The meeting will be open to public observation but not participation.

Date: October 29–30, 2001.

Time: 8:30 a.m. to 5 p.m.

Address: El Dorado Hotel, 309 West San Francisco Street, Santa Fe, NM.

FOR FURTHER INFORMATION CONTACT: John K. Rabiej, Chief, Rules Committee Support Office, Administrative Office of the United States Courts, Washington, DC 20544, telephone (202) 502–1820.

Dated: August 22, 2001.

John K. Rabiej,

Chief, Rules Committee Support Office.

[FR Doc. 01–21728 Filed 8–28–01; 8:45 am]

BILLING CODE 2210–55–M

JUDICIAL CONFERENCE OF THE UNITED STATES

Meeting of the Judicial Conference Advisory Committee on Rules of Bankruptcy Procedure

AGENCY: Judicial Conference of the United States Advisory Committee on Rules of Bankruptcy Procedure.

ACTION: Notice of open meeting.

SUMMARY: The Advisory Committee on Rules of Bankruptcy Procedure will hold a two-day meeting. The meeting will be open to public observation but not participation.

Date: September 13–14, 2001.

Time: 8:30 a.m. to 5 p.m.

Address: John Carver Inn, 25 Summer Street, Plymouth, MA

FOR FURTHER INFORMATION CONTACT: John K. Rabiej, Chief, Rules Committee Support Office, Administrative Office of the United States Courts, Washington, DC 20544, telephone (202) 502–1820.

Dated: August 22, 2001.

John K. Rabiej,

Chief, rules Committee Support Office.

[FR Doc. 01–21729 Filed 8–28–01; 8:45 am]

BILLING CODE 2210–55–M

JUDICIAL CONFERENCE OF THE UNITED STATES

Meeting of the Judicial Conference Advisory Committees on Rules of Bankruptcy, Civil, and Criminal Procedure, and Rules of Evidence

AGENCY: Judicial Conference of the United States Advisory Committees on Rules of Bankruptcy, Civil, and Criminal Procedure, and Rules of Evidence.

ACTION: Notice of open hearings.

SUMMARY: The Advisory Committees on Rules of Bankruptcy, Civil, and Criminal Procedure, and Rules of Evidence have proposed the following rules:

Bankruptcy Rules: 1007, 2003, 2009, and 2016, and new Rule 7007.1, and Official Forms 1, 5, and 17.

Civil Rules: 23, 51, and 53.

Criminal Rule: 35.

Evidence Rules: 608 and 804.

Public hearings are scheduled to be held on the amendments to:

- Bankruptcy Rules in Washington, D.C., on January 4, 2002;
- Civil Rules in San Francisco, California, on November 30, 2001; in Washington, DC, on January 22, 2002; and in Dallas, Texas, on February 4, 2002;
- Criminal Rules in Atlanta, Georgia, on January 7, 2002; and
- Evidence Rules in Washington, DC, on January 23, 2002.

The Judicial Conference Committee on Rules of Practice and Procedure submits these rules for public comment. All comments and suggestions with respect to them must be placed in the hands of the Secretary as soon as convenient and, in any event, not later than February 15, 2002. Those wishing to testify should contact the Secretary at the address below in writing at least 30 days before the hearing. All written comments on the proposed rule amendments should be mailed to: Peter G. McCabe, Secretary, Committee on Rules of Practice and Procedure of the Judicial Conference of the United States, Thurgood Marshall Federal Judiciary Building, Washington, DC 20544.

Comments on the proposed rule amendments may also be sent electronically via the Internet at <*http://www.uscourts.gov/rules*>. In accordance with established procedures all comments submitted on the proposed amendments are available to public inspection.

The text of the proposed rule amendments and the accompanying Committee Notes can be found at the United States Federal Courts' Home

Page at <*http://www.uscourts.gov/rules*> on the Internet.

FOR FURTHER INFORMATION CONTACT: John K. Rabiej, Chief Rules Committee Support Office, Administrative Office of the United States Courts, Washington, DC 20544, telephone (202) 502–1820.

Dated: August 22, 2001.

John K. Rabiej,

Chief, Rules Committee Support Office.

[FR Doc. 01–21730 Filed 8–28–01; 8:45 am]

BILLING CODE 2210–55–M

DEPARTMENT OF JUSTICE

Immigration and Naturalization Service

[INS No. 2115N–01]

RIN 1115–AG06

Filing Address for Submitting Applications Under the Legal Immigration Family Equity (LIFE) Act Legalization Provisions and LIFE Act Amendments Family Unity Provisions

AGENCY: Immigration and Naturalization Service, Justice.

ACTION: Notice.

SUMMARY: On June 1, 2001, at 66 FR 29661, the Department of Justice published an interim rule in the **Federal Register**. The supplementary information portion of the interim rule provided an incorrect address to be used for applicants under section 1104 of the Legal Immigration Family Equity (LIFE) Act (otherwise known as LIFE Legalization) and section 1504 of the LIFE Act Amendments (LIFE Act Amendment Family Unity). This notice serves to advise the public of the correct address to which applications for LIFE Legalization and LIFE Act Amendments Family Unity should be filed. Accordingly, all applications filed in relation to LIFE Legalization (such as Forms I–485, Application to Register Permanent Residence or Adjust Status, and supporting documents, Forms I–765, Application for Employment Authorization, and Forms I–131, Application for Travel Document) and LIFE Act Amendments Family Unity (Forms I–817, Application for Family Unity Benefits) should be mailed to: United States Immigration and Naturalization Service, P.O. Box 7219, Chicago, Illinois 60680–7219.

DATES: This notice is effective August 29, 2001.

FOR FURTHER INFORMATION CONTACT: Daniel Renaud, Chief, Field Coordination Branch, 800 K Street NW, Room 1000, Washington, DC 20536, telephone (202) 514–2982.

Dated: August 15, 2001.

James W. Ziglar,

Commissioner, Immigration and Naturalization Service.

[FR Doc. 01–21796 Filed 8–28–01; 8:45 am]

BILLING CODE 4410–10–M

DEPARTMENT OF LABOR

Employment and Training Administration

[TA–W–39,204]

A–1 Manufacturing, Inc., Garment Corporation of America, Brilliant, Alabama: Amended Certification Regarding Eligibility To Apply for Worker Adjustment Assistance

In accordance with Section 223 of the Trade Act of 1974 (19 U.S.C. 2273) the Department of Labor issued a Certification of Eligibility To Apply for Worker Adjustment Assistance on June 29, 2001, applicable to workers of A–1 Manufacturing, Inc., Brilliant, Alabama. The notice was published in the **Federal Register** on July 20, 2001 (66 FR 38026).

At the request of the company, the Department reviewed the certification for workers of the subject firm. The workers were engaged in the production of rental uniforms, such as coveralls, jackets, jumpsuits, and shopcoats. Information received from the company shows that the Garment Corporation of America is the parent firm of A–1 Manufacturing, Inc., Brilliant, Alabama. Information also shows that some workers separated from employment at the subject firm had their wages reported under a separate unemployment insurance (UI) tax account for Garment Corporation of America.

Accordingly, the Department is amending the certification to properly reflect this matter.

The intent of the Department's certification is to include all workers of A–1 Manufacturing, Inc., Brilliant, Alabama who were adversely affected by increased imports of rental uniforms, such as coveralls, jackets, jumpsuits, and shopcoats.

The amended notice applicable to [TA–W–39,204] is hereby issued as follows:

All workers of A–1 Manufacturing, Inc., Garment Corporation of America, Brilliant, Alabama who became totally or partially separated from employment on or after April 16, 2000, through June 29, 2003, are eligible to apply for adjustment assistance under Section 223 of the Trade Act of 1974.

Signed at Washington, DC, this 13th day of August, 2001.

Linda G. Poole,

Certifying Officer, Division of Trade Adjustment Assistance.

[FR Doc. 01–21844 Filed 8–28–01; 8:45 am]

BILLING CODE 4510–30–M

DEPARTMENT OF LABOR

Employment and Training Administration

[TA–W–38, 283, TA–W–38, 283A]

Fernbrook and Co. Plant #2 Palmerton, PA, and Fernbrook and Co. Plant #1 Palmerton, PA; Amended Certification Regarding Eligibility To Apply for Worker Adjustment Assistance

In accordance with section 223 of the Trade Act of 1974 (19 U.S.C. 2273) the Department of Labor issued a Certification of Eligibility to Apply for Worker Adjustment Assistance on January 31, 2001, applicable to workers of Fernbrook #2. Palmerton, Pennsylvania. The notice was published in the **FEDERAL REGISTER** on March 2, 2001 (66 FR 13086).

At the request of the petitioners, the Department reviewed the certification for workers of the subject firm. The workers were engaged in the production of ladies' pants.

New information shows that worker separations occurred at Plant #1 of Fernbrook and Co., Palmerton, Pennsylvania. The workers are engaged in employment related to the production of pants and shorts.

Accordingly, the Department is amending the certification to cover workers of Fernbrook and Co., Plant #1, Palmerton, Pennsylvania.

The intent of the Department's certification is to include all workers of Fernbrook and Co. adversely affected by increased imports.

The amended notice applicable to TA–W–38, 283 is hereby issued as follows:

All workers of Fernbrook and Co., Plant #2, Palmerton, Pennsylvania (TA–W–38, 283) and Plant #1, Palmerton, Pennsylvania (TA–W–38, 283A) who became totally or partially separated from employment on or after October 23, 1999, through January 31, 2003, are eligible to apply for adjustment assistance under section 223 of the Trade Act of 1974.

Signed at Washington D.C. this 14th day of August, 2001.

Linda G. Poole,

Certifying Officer, Division of Trade Adjustment Assistance.

[FR Doc. 01–21839 Filed 8–28–01; 8:45 am]

BILLING CODE 4510–30–M

DEPARTMENT OF LABOR

Employment and Training Administration

[TA–W–38,898]

LTV Steel Mining Company Including Workers of Cleveland Cliffs Mining Company Hoyt Lakes, MN; Amended Certification Regarding Eligibility To Apply for Worker Adjustment Assistance

In accordance with Section 223 of the Trade Act of 1974 (19 U.S.C. 2273) the Department of Labor issued a Certification of Eligibility to Apply for Worker Adjustment Assistance on May 17, 2001, applicable to workers of LTV Steel Mining Company, Hoyt Lakes, Minnesota who were engaged in the production of taconite pellets. The notice was published in the **Federal Register** on May 25, 2001 (66 FR 28928).

At the request of the United Steelworkers of America, Local Union 4108, the Department reviewed the certification for workers of the subject firm. The company reports that management staff at the subject firm was provided by Cleveland Cliffs Mining Company. Administrative functions, including production management and accounting services supported the production of taconite pellets at the subject firm.

Accordingly, the Department is amending the certification to include workers of Cleveland Cliffs Mining Company employed at LTV Steel Mining Company, Hoyt Lakes, Minnesota.

The intent of the Department's certification is to include all workers of LTV Steel Mining Company adversely affected by increased imports.

The amended notice applicable to [TA–W–38,898] is hereby issued as follows:

All workers of LTV Steel Mining Company, Hoyt Lakes, Minnesota, engaged in employment related to the production of taconite pellets; and, all workers of Cleveland Cliffs Mining Company employed at LTV Steel Mining Company, Hoyt lakes, Minnesota, who became totally or partially separated from employment on or after March 5, 2000 through May 17, 2003, are eligible to apply for adjustment assistance under Section 223 of the Trade Act of 1974.

Signed at Washington, DC this 13th day of August, 2001.

Linda G. Poole,

Certifying Officer, Division of Trade Adjustment Assistance.

[FR Doc. 01–21838 Filed 8–28–01; 8:45 am]

BILLING CODE 4510–30–M

DEPARTMENT OF LABOR

Employment and Training Administration

[TA–W–38,852]

Lucia, Inc., Winston-Salem, North Carolina; Amended Certification Regarding Eligibility To Apply for Worker Adjustment Assistance

In accordance with Section 223 of the Trade Act of 1974 (19 U.S.C. 2273) the Department of Labor issued a Certification of Eligibility to Apply for Worker Adjustment Assistance on June 11, 2001, applicable to workers of Lucia, Inc., Winston-Salem, North Carolina. The notice was published in the **Federal Register** on June 27, 2001 (FR 66 34254).

At the request of the State agency, the Department reviewed the certification for workers of the subject firm. The workers produce ladies' apparel. New findings show that there was a previous certification, TA–W–35,829, as amended, issued on March 31, 1999 for workers of Lucia, Inc., Winston-Salem North Carolina who were engaged in employment related to the production of ladies' apparel. That certification expired March 31, 2001. To avoid an overlap in worker group coverage, this certification is being amended to change the impact date from March 2, 2000 to April 1, 2001, for workers of the subject firm.

The amended notice applicable to TA–W–38,852 is hereby issued as follows:

All workers of Lucia, Inc., Winston-Salem, North Carolina who became totally or partially separated from employment on or after April 1, 2001, through June 11, 2003, are eligible to apply for adjustment assistance under Section 223 of the Trade Act of 1974.

Signed at Washington, DC this 15th day of August, 2001.

Linda G. Poole,

Certifying Officer, Division of Trade Adjustment Assistance.

[FR Doc. 01–21837 Filed 8–28–01; 8:45 am]

BILLING CODE 4510–30–M

DEPARTMENT OF LABOR

Employment and Training Administration

[TA–W–38,586, TA–W–38,586A]

OBG Manufacturing Company, OshKosh B'Gosh, Inc., Liberty, KY, and OBG Manufacturing Company, OshKosh B'Gosh, Inc., Albany, KY; Amended Certification Regarding Eligibility To Apply for Worker Adjustment Assistance

In accordance with Section 223 of the Trade Act of 1974 (19 U.S.C. 2273) the Department of Labor issued a Certification of Eligibility to Apply for Worker Adjustment Assistance on March 21, 2001, applicable to workers of OBG Manufacturing Company, OshKosh B'Gosh, Inc., Liberty, Kentucky. The notice was published in the **Federal Register** on April 16, 2001 (66 FR 19521).

At the request of the company, the Department reviewed the certification for workers of the subject firm. New information shows that worker separations occurred at the Albany, Kentucky facility of OBG Manufacturing Company, OshKosh B'Gosh, Inc. The workers are engaged in employment related to the production of children's apparel.

Accordingly, the Department is amending the certification to cover workers of OBG Manufacturing Company, OshKosh B'Gosh, Inc., Albany, Kentucky.

The intent of the Department's certification is to include all workers of OBG Manufacturing Company, OshKosh B'Gosh, Inc. adversely affected by increased imports.

The amended notice applicable to [TA–W–38,690] is hereby issued as follows:

All workers of OBG Manufacturing Company, OshKosh B'Gosh, Inc., Liberty, Kentucky (TA–W–38,586) and Albany, Kentucky (TA–W–38,586a) engaged in employment related to the production of children's apparel, who became totally or partially separated from employment on or after January 12, 2000 through March 21, 2003, are eligible to apply for adjustment assistance under Section 223 of the Trade Act of 1974.

Signed at Washington, DC this 13th day of August, 2001.

Linda G. Poole,

Certifying Officer, Division of Trade Adjustment Assistance.

[FR Doc. 01–21840 Filed 8–28–01; 8:45 am]

BILLING CODE 4510–30–M

DEPARTMENT OF LABOR

Employment and Training Administration

[TA–W–37,955]

J.A. Thurston Co., Inc., Now Known as Saunders Brothers Rumford, Rumford, ME; Amended Certification Regarding Eligibility To Apply for Worker Adjustment Assistance

In accordance with Section 223 of the Trade Act of 1974 (19 U.S.C. 2273) the Department of Labor issued a Certification of Eligibility To Apply for Worker Adjustment Assistance on August 28, 2000, applicable to workers of J.A. Thurston Co., Inc., Rumford, Maine. The notice was published in the **Federal Register** on September 22, 2000 (65 FR 57386).

At the request of the State agency, the Department reviewed the certification for workers of the subject firm. The workers are engaged in the production of dowels. The company reports that in April, 2001, Saunders Brothers purchased J.A. Thurston Co., Inc., and became known as Saunders Brothers Rumford.

Information also shows that workers separated from employment at the subject firm, had their wages reported under a separate unemployment insurance (UI) tax account for Saunders Brothers Rumford.

Accordingly, the Department is amending the certification determination to properly reflect this matter.

The intent of the Department's certification is to include all workers of J.A. Thurston Co., Inc., now known as Saunders Brothers Rumford who were adversely affected by increased imports.

The amended notice applicable to TA–W–37,955 is hereby issued as follows:

All workers of J.A. Thurston Co., Inc., now known as Saunders Brothers Rumford, Rumford, Maine who became totally or partially separated from employment on or after August 4, 1999, through August 28, 2002, are eligible to apply for adjustment assistance under Section 223 of the Trade Act of 1974.

Signed at Washington, DC this 13th day of August, 2001.

Linda G. Poole,

Certifying Officer, Division of Trade Adjustment Assistance.

[FR Doc. 01–21841 Filed 8–28–01; 8:45 am]

BILLING CODE 4510–30–M

DEPARTMENT OF LABOR

Employment and Training Administration

[TA–W–39, 364]

Spartan International Rosemont Plant, Jonesville, South Carolina; Notice of Termination of Investigation

Pursuant to Section 221 of the Trade Act of 1974, an investigation was initiated on June 4, 2001, in response to a worker petition which was filed on behalf of workers at Spartan International Rosemont Plant, Jonesville, South Carolina.

This case is being terminated because the Department was unable to locate an official of the Company to obtain the information necessary to issue a determination. Consequently, further investigation in this case would serve no purpose, and the investigation has been terminated.

Signed at Washington, DC this 20th day of August, 2001.

Linda G. Poole,

Certifying Officer, Division of Trade Adjustment Assistance.

[FR Doc. 01–21843 Filed 8–28–01; 8:45 am]

BILLING CODE 4510–30–M

DEPARTMENT OF LABOR

Employment and Training Administration

[TA–W–38,358 and NAFTA–4241]

Tower Automotive, Kalamazoo, Michigan; Notice of Negative Determination Regarding Application for Reconsideration

By application dated March 30, 2001, the International Union, United Automobile, Aerospace & Agricultural Implement Workers of America (UAW), requested administrative reconsideration of the Department's negative determination regarding eligibility to apply for Trade Adjustment Assistance (TAA) and North American Free Trade Agreement—Transitional Adjustment Assistance (NAFTA–TAA), applicable to workers and former workers of the subject firm. The denial notices were signed on January 31, 2001, and published in the **Federal Register** on March 2, 2001 (66 FR 52539).

Pursuant to 29 CFR 90.18(c) reconsideration may be granted under the following circumstances:

(1) If it appears on the basis of facts not previously considered that the determination complained of was erroneous;

(2) If it appears that the determination complained of was based on a mistake in the determination of facts not previously considered; or

(3) If in the opinion of the Certifying Officer, a misinterpretation of facts or of the law justified reconsideration of the decision.

The UAW asserts that for the NAFTA–TAA petition denial, the finding that the customers of Tower Automotive did not import stampings is incorrect. The UAW states that Ford Motor Company was one of the major customers and acknowledges moving work, including 72 different dies for metal stamped components, from the Kalamazoo facility to Hermosillo, Mexico. The UAW states that Ford reports that the parts made in Mexico are being used in the production of a non-U.S. market automobile. Further, the UAW believes that some portion of the Mexican parts production is being imported for use in the U.S. market, and that a survey should be conducted for each of those 72 components.

The Department issued the NAFTA–TAA denial to workers producing metal stampings at Tower Automotive, based on the finding that the subject firm did not shift production of those articles from Kalamazoo, Michigan, to Mexico or Canada, nor did the company or customers import articles like or directly competitive with those produced by the workers. If Ford did move the stamping production to Mexico, that is not a basis for certifying the Tower Automotive workers. Only if those stampings were being returned to the U.S. from Mexico could the worker group be certified for NAFTA–TAA. The survey of the major customers of the subject firm showed that none imported metal stampings from Canada or Mexico in 1999 or 2000. The survey conducted included articles like or directly competitive with those made by the workers at the subject firm and would include the articles made with the 72 dies cited by the UAW.

The UAW asserts that for the TAA petition denial, the Department was incorrect in basing the failure to meet criterion (3) of the group eligibility requirements of Section 222 of the Trade Act of 1974, solely on the finding that the company did not import metal stampings. The Department concurs with the UAW on this issue. The decision document for [TA–W–38,385] failed to include the results of the customer survey used for the petition investigation for [NAFTA–4241]. The Department's NAFTA customer survey asked the respondents to provide information not limited to import purchases of metal stampings from

Mexico or Canada, but additionally, all other import purchases. The inclusion of this information would not have reversed the findings for criterion (3).

The UAW also submitted import data for automobiles that they believe are like or directly competitive with the Ford Escort, the automobile for which the Tower Automotive supplied parts. Under the Trade Act of 1974, as amended, the Department is required to examine the imports of articles like or directly competitive with those produced at the workers' firm. Consequently, for both the TAA and NAFTA–TAA petitions, the Department does not consider automobiles to be like or directly competitive with the stampings produced by the workers at Tower Automotive, Kalamazoo, Michigan.

Conclusion

After review of the application and investigative findings, I conclude that there has been no error or misinterpretation of the law or of the facts which would justify reconsideration of the Department of Labor's prior decisions. Accordingly, the application is denied.

Signed at Washington, DC this 8th day of August 2001.

Edward A. Tomchick,

Director, Division of Trade Adjustment Assistance.

[FR Doc. 01–21848 Filed 8–28–01; 8:45 am]

BILLING CODE 4510–30–M

DEPARTMENT OF LABOR

Employment and Training Administration

[NAFTA–4241]

Tower Automotive, Kalamazoo, Michigan; Affirmative Finding Regarding Qualification as a Secondarily Affected Worker Group Pursuant to the Statement of Administrative Action Accompanying the North American Free Trade Agreement (NAFTA) Implementation Act

The Department of Labor herein presents the results of an investigation regarding qualification as a secondarily-impacted firm, pursuant to the Statement of Administrative Action accompany the North American Free Trade Agreement (NAFTA) Implementation Act.

In order for an affirmative finding to be made, the following requirements must be met:

(1) The subject firm must be a supplier—such as of components, unfinished or semifinished goods—to a firm that is directly affected by imports from Mexico or Canada of articles like or directly competitive with articles produced by that firm or shifts in production of such articles to those countries; or

(2) The subject firm must assemble or finish products made by a directly-impacted firm; and

(3) The loss of business with the directly-affected firm must have contributed importantly to worker separations at the subject firm.

The investigation revealed that requirements (1) and (3) are met.

The workers of Tower Automotive, Kalamazoo, Michigan, produced metal stampings.

Evidence revealed that the major customer for which the subject firm supplies stampings shifted production to Mexico to serve that market.

Based on this evidence, I determine that workers of Tower Automotive, Kalamazoo, Michigan, qualify as secondarily affected pursuant to the Statement of Administrative Action accompanying the North American Free Trade Agreement Implementation Act.

For further information on assistance under Title I of the Workforce Investment Act (WIA) which may be available to workers included under this determination, contact: Mr. John S. Palmer, Jr., Deputy Director, Workforce Programs, Michigan Department of Career Development, 201 N. Washington Square, Victor Office Center, 7th Floor, Lansing, Michigan 48913.

Signed in Washington, D.C. this 8th day of August 2001.

Edward A. Tomchick,

Certifying Officer, Division of Trade Adjustment Assistance.

[FR Doc. 01–21849 Filed 8–28–01; 8:45 am]

BILLING CODE 4510–30–M

DEPARTMENT OF LABOR

Employment and Training Administration

[TA–W–39, 667]

Wheeling-Pittsburgh Steel Corp. Wheeling, West Virginia; Notice of Termination of Investigation

Pursuant to Section 221 of the Trade Act of 1974, an investigation was initiated on July 23, 2001, in response to a petition filed by the United Steelworkers of America on behalf of workers at Wheeling-Pittsburgh Steel, Corp., Wheeling, West Virginia, Beech Bottom, West Virginia, Allenport, Pennsylvania, Steubenville, Ohio, Martins Ferry, Ohio, and Yorkville, Ohio.

The petitioning group of workers, in addition to the Wheeling-Pittsburgh Steel, Corp. workers in Beech Bottom, West Virginia, Allenport, Pennsylvania, Steubenville, Ohio, Martins Ferry, Ohio, and Yorkville, Ohio, are subject to an ongoing investigation for which a determination has not yet been issued [TA–W–39, 015]. Consequently, further investigation in this case would serve no purpose, and the investigation has been terminated.

Signed at Washington, DC this 20th day of August 2001.

Linda G. Poole,

Certifying Officer, Division of Trade Adjustment Assistance.

[FR Doc. 01–21842 Filed 8–28–01; 8:45 am]

BILLING CODE 4510–30–M

DEPARTMENT OF LABOR

Employment and Training Administration

[TA–W–39,353]

Double Springs Corp., Garment Corporation of America, Double Springs, Alabama; Amended Certification Regarding Eligibility to Apply for Worker Adjustment Assistance

In accordance with Section 223 of the Trade Act of 1974 (19 U.S.C. 2273) the Department of Labor issued a Certification of Eligibility to Apply for Worker Adjustment Assistance on June 29, 2001, applicable to workers of Double Springs Corp., Double Springs, Alabama. The notice was published in the **Federal Register** on July 20, 2001 (66 FR 38026).

At the request of the company, the Department reviewed the certification for workers of the subject firm. The workers were engaged in the production of work shirts. Information received from the company shows that the Garment Corporation of America is the parent firm of Double Springs Corp., Double Springs, Alabama. Information also shows that some workers separated from employment at the subject firm had their wages reported under a separate unemployment insurance (UI) tax account for Garment Corporation of America.

Accordingly, the Department is amending the certification to properly reflect this matter.

The intent of the Department's certification is to include all workers of Double Springs Corp., Double Springs, Alabama who were adversely affected by increased imports of work shirts.

The amended notice applicable to TA–W–39,353 is hereby issued as follows:

All workers of Double Springs Corp., Garment Corporation of America, Double Springs, Alabama who became totally or partially separated from employment on or after May 14, 2000, through June 29, 2003, are eligible to apply for adjustment assistance under Section 223 of the Trade Act of 1974.

Signed at Washington, DC, this 13th day of August, 2001.

Linda G. Poole,

Certifying Officer, Division of Trade Adjustment Assistance.

[FR Doc. 01–21845 Filed 8–28–01; 8:45 am]

BILLING CODE 4510–30–M

DEPARTMENT OF LABOR

Employment and Training Administration

[TA–W–38,617; TA–W–38,617B]

Garan Manufacturing Corp; Amended Certification Regarding Eligibility To Apply for Worker Adjustment Assistance

In accordance with section 223 of the Trade Act of 1974 (19 USC 2273) the Department of Labor issued a Certification of Eligibility to Apply for Worker Adjustment Assistance on February 9, 2001, applicable to workers of Garan Manufacturing Corporation, Carthage, Mississippi. The notice was published in the **Federal Register** on April 5, 2001 (66 FR 18118).

At the request of the petitioners, the Department reviewed the certification for workers of the subject firm. The workers are engaged in the production of children's knitwear.

New information shows that worker separations occurred at Garan Manufacturing's General Offices located in Starkville, Mississippi. The general offices provide support functions including manufacturing management, accounting, quality control, engineering and customer service functions for the subject firms' production facilities including Carthage, Mississippi.

The intent of the Department's certification is to include all workers of Garan Manufacturing Corporation adversely affected by increased imports of children's knitwear.

Accordingly, the Department is amending the certification to properly reflect this matter.

The amended notice applicable to TA–W–38,617 is hereby issued as follows:

All workers of Garan Manufacturing Corporation, Carthage, Mississippi (TA–W–38,617) and General Offices, Starkville, Mississippi (TA–W–38,617B) who became totally or partially separated from employment on or after January 19, 2000, through February 9, 2003, are eligible to apply for adjustment assistance under Section 223 of the Trade Act of 1974.

Signed at Washington DC this 13th day of August, 2001.

Linda G. Poole,

Certifying Officer, Division of Trade Adjustment Assistance.

[FR Doc. 01–21850 Filed 8–28–01; 8:45 am]

BILLING CODE 4510–30–M

DEPARTMENT OF LABOR

Employment and Training Administration

Pottstown Precision Casting, Inc./ Harvard Industries, Inc., Formerly Known as Doehler Jarvis, Stowe, Pennsylvania; Notice of Affirmative Determination Regarding Application for Reconsideration

By letter dated May 2, 2001, the International Union, United Automobile, Aerospace & Agricultural Implement Workers of America (UAW), requested administrative reconsideration of the Department of Labor's Notice of Negative Determination Regarding Eligibility to Apply for Trade Adjustment Assistance, applicable to workers of the subject firm. The denial notice was signed on February 20, 2001 and published in the **Federal Register** on April 5, 2001 (66 FR 18117).

The Department's review of the application shows that information provided supports reopening of the petition investigation.

Conclusion

After careful review of the application, I conclude that the claim is of sufficient weight to justify reconsideration of the Department of Labor's prior decision. The application is, therefore, granted.

Signed at Washington, DC, this 15th day of August, 2001.

Edward A. Tomchick,

Director, Division of Trade Adjustment Assistance.

[FR Doc. 01–21846 Filed 8–28–01; 8:45 am]

BILLING CODE 4510–30–M

DEPARTMENT OF LABOR

Employment and Training Administration

[TA–W–38, 545]

Sappi Fine Paper Company, North America, Muskegon, Michigan; Notice of Negative Determination Regarding Application for Reconsideration

By application dated April 30, 2001, the company requested reconsideration of the Department's negative determination regarding eligibility to apply for Trade Adjustment Assistance (TAA), applicable to workers and former workers of the subject firm. The denial notice was signed on February 27, 2001, and published in the **Federal Register** on April 5, 2001 (66 FR 18117).

Pursuant to 28 CFR 90.18(c) reconsideration may be granted under the following circumstances:

(1) If it appears on the basis of facts not previously considered that the determination complained of was erroneous;

(2) If it appears that the determination complained of was based on a mistake in the determination of facts not previously considered; or

(3) If in the opinion of the Certifying Officer, a misinterpretation of facts or of the law justified reconsideration of the decision.

The investigation findings for the February 27 denial of TAA for workers of Sappi Fine Paper Company, producing coated paper used in commercial printing in Muskegon, Michigan showed that criterion (3) of the group eligibility requirements of Section 222 of the Trade Act of 1974, as amended, was not met. The investigation revealed that sales at Sappi Fine Paper Company increased from 1999 through 2000. There were no company imports of articles like or directly competitive with coated publication paper.

The petitioner asserts that increased foreign competition was a major factor in company layoffs because it has eroded the competitive position of the subject firm. However, declines in employment at the Sappi Paper Company are attributed to the company's decision to reorganize.

Conclusion

After review of the application and investigative findings, I conclude that there has been no error or misinterpretation of the law of the facts which would justify reconsideration of the Department of Labor's prior decision. Accordingly, the application is denied.

Signed at Washington, DC, this 13th day of August 2001.

Edward A. Tomchick,

Director, Division of Trade Adjustment Assistance.

[FR Doc. 01–21851 Filed 8–28–01; 8:45 am]

BILLING CODE 4510–30–M

DEPARTMENT OF LABOR

Employment and Training Administration

[TA–W–38,983]

ZapatA Technologies, Inc.; Hazelton, Pennsylvania; Notice of Negative Determination Regarding Application for Reconsideration

By applications of May 9 and May 16, 2001, petitioners requested administrative reconsideration of the Department's negative determination regarding eligibility for workers and former workers of the subject firm to apply for Trade Adjustment Assistance (TAA). The denial notice applicable to workers of ZapatA Technologies, Inc., Hazelton, Pennsylvania, was issued on April 20, 2001, and was published in the **Federal Register** on May 9, 2001 (66 FR 23733).

Pursuant to 29 CFR 90.18(c) reconsideration may be granted under the following circumstances:

(1) If it appears on the basis of facts not previously considered that the determination complained of was erroneous;

(2) if it appears that the determination complained of was based on a mistake in the determination of facts not previously considered; or

(3) if in the opinion of the Certifying Officer, a misinterpretation of facts or of the law justified reconsideration of the decision.

The petitioners suggest that fifty percent of their work involved technical and support services, and that those intangible articles ''are now being imported to various plants'' including the ZapatA, Inc., Muskogee, Oklahoma plant, other U.S. and world-wide locations. The petitioners attached documentation from the company that effective February 1, 2001, technical information, business, sales, and technical services were to be transferred to a sister plant in Spain.

Only in very limited instances are service workers certified for TAA, namely the worker separations must be caused by a reduced demand for their services from a parent or controlling firm or subdivision whose workers produce an article and who are currently under a certification for TAA. If import impact had been established for the production workers at ZapatA Technologies, Inc., Hazelton, Pennsylvania, only then, could the petitioners be included in a certification for TAA.

The petitioners also described how the parent company, ZapatA International, who also sells crowns and enclosures to the bottling industry, has lost business to competitors. The Department's petition investigation under the Trade Act of 1974, was specifically for the workers at ZapatA Technologies, Inc., Hazelton, Pennsylvania. The petition investigation is conducted for the workers' appropriate firm or subdivision, not on a company-wide or industry-wide basis.

The Department's denial of the TAA petition filed on behalf of workers producing bottle cap manufacturing machinery at ZapatA finding that the contributed importantly criterion of Section 222 of the Trade Act of 1974, was not met. The production at the subject firm was primarily for the export market. Thus, the workers were not affected by increased imports. Although the company did shift production of bottle cap manufacturing machinery abroad, that is not a basis for worker group certification under the Trade Act.

Conclusion

After review of the application and investigative findings, I conclude that there has been no error or misinterpretation of the law or of the facts which would justify reconsideration of the Department of Labor's prior decision. Accordingly, the application is denied.

Signed at Washington, D.C., this 13th day of August 2001.

Edward A. Tomchick,

Director, Division of Trade Adjustment Assistance.

[FR Doc. 01–21847 Filed 8–28–01; 8:45 am]

BILLING CODE 4510–30–M

NATIONAL ARCHIVES AND RECORDS ADMINISTRATION

Records Schedules for Electronic Copies Previously Covered by General Records Schedule 20; Availability and Request for Comments

AGENCY: National Archives and Records Administration (NARA).

ACTION: Notice of availability of proposed records schedules; request for comments.

SUMMARY: The National Archives and Records Administration (NARA) publishes notice at least once monthly of certain Federal agency requests for records disposition authority (records schedules). Once approved by NARA, records schedules provide mandatory instructions on what happens to records when no longer needed for current Government business. They authorize the preservation of records of continuing value in the National Archives of the United States and the destruction, after a specified period, of records lacking administrative, legal, research, or other value. Notice is published for records schedules in which agencies propose to destroy records not previously authorized for disposal or reduce the retention period of records already authorized for disposal.

This request for comments pertains solely to schedules for electronic copies of records created using word processing and electronic mail where the recordkeeping copies are already scheduled. (Electronic copies are records created using word processing or electronic mail software that remain in storage on the computer system after the recordkeeping copies are produced.)

These records were previously approved for disposal under General Records Schedule 20, Items 13 and 14. The agencies identified in this notice have submitted schedules pursuant to NARA Bulletin 99–04 to obtain separate disposition authority for the electronic copies associated with program records and administrative records not covered by the General Records Schedules. NARA invites public comments on such records schedules, as required by 44 U.S.C. 3303a(a). To facilitate review of these schedules, their availability for comment is announced in **Federal Register** notices separate from those used for other records disposition schedules.

DATES: Requests for copies must be received in writing on or before October 15, 2001. On request, NARA will send a copy of the schedule. NARA staff usually prepare appraisal memorandums concerning a proposed schedule. These, too, may be requested. Requesters will be given 30 days to submit comments.

Some schedules submitted in accordance with NARA Bulletin 99–04 group records by program, function, or organizational element. These schedules do not include descriptions at the file series level, but, instead, provide citations to previously approved schedules or agency records disposition manuals (see Supplementary Information section of this notice). To facilitate review of such disposition requests, previously approved schedules

or manuals that are cited may be requested in addition to schedules for the electronic copies. NARA will provide the first 100 pages at no cost. NARA may charge $.20 per page for additional copies. These materials also may be examined at no cost at the National Archives at College Park (8601 Adelphi Road, College Park, MD).

ADDRESSES: To request a copy of any records schedule identified in this notice, write to the Life Cycle Management Division (NWML), National Archives and Records Administration (NARA), 8601 Adelphi Road, College Park, MD 20740–6001. Requests also may be transmitted by FAX to 301–713–6852 or by e-mail to *records.mgt@arch2.nara.gov.*

Requesters must cite the control number, which appears in parentheses after the name of the agency which submitted the schedule, and must provide a mailing address. Those who desire appraisal reports and/or copies of previously approved schedules or manuals should so indicate in their request.

FOR FURTHER INFORMATION CONTACT: Michael Miller, Director, Modern Records Programs (NWM), National Archives and Records Administration, 8601 Adelphi Road, College Park, MD 20740–6001. Telephone: (301) 713–7110; E-mail: records.mgt@nara.gov.

SUPPLEMENTARY INFORMATION: Each year Federal agencies create billions of records on paper, film, magnetic tape, and other media. To control this accumulation, agency records managers prepare schedules proposing retention periods for records and submit these schedules for NARA approval, using the Standard Form (SF) 115, Request for Records Disposition Authority. These schedules provide for the timely transfer into the National Archives of historically valuable records and authorize the disposal of all other records after the agency no longer needs the records to conduct its business. Routine administrative records common to most agencies are approved for disposal in the General Records Schedules (GRS), which are disposition schedules issued by NARA that apply Government-wide.

On March 25, 1999, the Archivist issued NARA Bulletin 99–04, which told agencies what they must do to schedule electronic copies associated with previously scheduled program records and certain administrative records that were previously scheduled under GRS 20, Items 13 and 14. On December 27, 1999, the Archivist issued NARA Bulletin 2000–02, which suspended Bulletin 99–04 pending NARA's completion in FY 2001 of an overall review of scheduling and appraisal. On completion of this review, which will address all records, including electronic copies, NARA will determine whether Bulletin 99–04 should be revised or replaced with an alternative scheduling procedure. However, NARA will accept and process schedules for electronic copies prepared in accordance with Bulletin 99–04 that are submitted after December 27, 1999, as well as schedules that were submitted prior to this date.

Schedules submitted in accordance with NARA Bulletin 99–04 only cover the electronic copies associated with previously scheduled series. Agencies that wish to schedule hitherto unscheduled series must submit separate SF 115s that cover both recordkeeping copies and electronic copies used to create them.

In developing SF 115s for the electronic copies of scheduled records, agencies may use either of two scheduling models. They may add an appropriate disposition for the electronic copies formerly covered by GRS 20, Items 13 and 14, to every item in their manuals or records schedules where the recordkeeping copy has been created with a word processing or electronic mail application. This approach is described as Model 1 in Bulletin 99–04. Alternatively, agencies may group records by program, function, or organizational component and propose disposition instructions for the electronic copies associated with each grouping. This approach is described as Model 2 in the Bulletin. Schedules that follow Model 2 do not describe records at the series level.

For each schedule covered by this notice the following information is provided: name of the Federal agency and any subdivisions requesting disposition authority; the organizational unit(s) accumulating the records or a statement that the schedule has agency-wide applicability in the case of schedules that cover records that may be accumulated throughout an agency; the control number assigned to each schedule; the total number of schedule items; the number of temporary items (the record series proposed for destruction); a brief description of the temporary electronic copies; and citations to previously approved SF 115s or printed disposition manuals that scheduled the recordkeeping copies associated with the electronic copies covered by the pending schedule. If a cited manual or schedule is available from the Government Printing Office or has been posted to a publicly available Web site, this too is noted.

Further information about the disposition process is available on request.

Schedule Pending

1. Federal Emergency Management Agency, Agency-wide (N9–311–01–1, 56 items, 56 temporary items). Electronic copies of documents created using electronic mail and word processing that relate to such agency programs and activities as office administration, audits and investigations, budgeting, the continuity of Government program, disaster assistance, emergency operations and mobilization programs, the Federal Insurance Administration program, informational services, planning and management, personnel and payroll, procurement, property and space management, radiological defense, records management, telecommunications, temporary housing, and training and education. This schedule follows Model 2 as described in the Supplementary Information section of this notice. Recordkeeping copies of these files are included in the agency's Files Maintenance and Records Disposition manual (FEMA Manual 5400.2).

Dated: August 21, 2001.

Michael J. Kurtz,

Assistant Archivist for Records Services—Washington, DC.

[FR Doc. 01–21783 Filed 8–28–01; 8:45 am]

BILLING CODE 7515–01–P

NATIONAL FOUNDATION ON THE ARTS AND THE HUMANITIES

National Endowment for the Arts; Proposed Collection; Comment Request

ACTION: Notice.

SUMMARY: The National Endowment for the Arts, as part of its continuing effort to reduce paperwork and respondent burden, conducts a preclearance consultation program to provide the general public and Federal agencies with an opportunity to comment on proposed and/or continuing collections of information in accordance with the Paperwork Reduction Act of 1995 (44 U.S.C. 3506(c)(A)). This program helps to ensure that requested data can be provided in the desired format, reporting burden (time and financial resources) is minimized, collection instruments are clearly understood, and the impact of collection requirements on respondents can be properly assessed. Currently, the National Endowment for the Arts is soliciting comments concerning the proposed information

collection request for generic approval for customer service focus groups, short oral/written questionnaires to small target audiences, and structured interviews with individuals representative of external customer groups. A copy of the collection request can be obtained by contacting the office listed below in the address section of this notice.

DATES: Written comments must be submitted to the office listed in the address section below on or before October 26, 2001. The National Endowment for the Arts is particularly interested in comments that:

- Evaluate whether the proposed collection of information is necessary for the proper performance of the functions of the agency, including whether the information will have practical utility;
- Evaluate the accuracy of the Agency's estimate of the burden of the proposed collection of information, including the validity of the methodology and assumptions used;
- Enhance the quality, utility, and clarity of the information to be collected; and
- Minimize the burden of the collection of information on those who are to respond, including through the use of appropriate automated, electronic, mechanical, or other technological collection techniques or other forms of information technology, e.g., permitting the electronic submissions of responses.

ADDRESSES: Laurence M. Baden, Deputy Chairman for Management & Budget, National Endowment for the Arts, 1100 Pennsylvania Avenue, NW., Room 628, Washington, DC 20506–001, telephone (202) 682–5408 or (202) 682–5496 for TTY and TDD (these are not a toll-free numbers), fax (202) 682–5798.

Laurence M. Baden,

Deputy Chairman for Management and Budget.

[FR Doc. 01–21733 Filed 8–28–01; 8:45 am]

BILLING CODE 7536–01–M

NATIONAL SCIENCE FOUNDATION

Notice of Permit Applications Received Under the Antarctic Conservation Act of 1978 (Pub. L. 95–541)

AGENCY: National Science Foundation.

ACTION: Notice of permit applications received under the Antarctic Conservation Act of 1978, Public Law 95–541.

SUMMARY: The National Science Foundation (NSF) is required to publish notice of permit applications received to conduct activities regulated under the Antarctic Conservation Act of 1978. NSF has published regulations under the Antarctic Conservation Act at Title 45 Part 670 of the Code of Federal Regulations. This is the required notice of permit applications received.

DATES: Interested parties are invited to submit written data, comments, or views with respect to these permit applications by September 26, 2001. Permit applications may be inspected by interested parties at the Permit Office, address below.

ADDRESSES: Comments should be addressed to Permit Office, Room 755, Office of Polar Programs, National Science Foundation, 4201 Wilson Boulevard, Arlington, Virginia 22230.

FOR FURTHER INFORMATION CONTACT: Nadene G. Kennedy at the above address or (703) 292–7405.

SUPPLEMENTARY INFORMATION: The National Science Foundation, as directed by the Antarctic Conservation Act of 1978 (Pub. L. 94–541), has developed regulations that implement the ''Agreed Measures for the Conservation of Antarctic Fauna and Flora'' for all United States citizens. The Agreed Measures, developed by the Antarctic Treaty Consultative Parties, recommended establishment of a permit system for various activities in Antarctica and designation of certain animals and certain geographic areas requiring special protection. The regulations establish such a permit system to designate Specially Protected Areas and Sites of Special Scientific Interest.

The applications received are as follows:

1. *Applicant;* Permit Application No. 2002–007
   Rennie S. Holt, Director, U.S. AMLR Program, Southwest Fisheries Science Center, National Marine Fisheries Service, 8604 La Jolla Shores Drive, La Jolla, CA 92038

Activity for Which Permit Is Requested

Take, Import into the U.S.A., and Enter Specially Antarctic Protected Area. The applicant proposes to conduct ship-supported and land-based penniped studies in the region of the Antarctic Peninsula as a continuation of studies conducted from 1996–2001. Continuing studies encompassing census surveys, attendance, diving, foraging, diet, age determination, pathology, and long term monitoring (censusing/tagging) of Antarctic fur seals, Elephant, Crabeater, Leopard, Weddell, and Ross seals will be conducted at the AMLR Program campsite at Cape Shirreff, Livingston Island (Antarctic Specially Protected Area #149), including the San Telmo Islands. A compete census of the seal population will be conducted as well as tagging of up to 600 new fur seal pups. Attendance, diving and foraging studies will require instrumentation (TDR's) of up to 60 fur sales. Enema, scat and milk collection will be used to study the diet behavior of fur seals throughout the austral summer. Blood and other tissue samples will be collected to initiate pathology studies since prior sample collection detected the presence of Brucellis within the fur seal population.

The application also proposes to continue seabird research conducted in the past. The studies will include censuses and banding of all sea birds. A subset of chinstrap and Gentoo penguins will be captured, and weighed. A subset of adult penguins will have blood and stomach samples collected, where as others will have instruments temporarily attached to collect diving/foraging information in an attempt to examine the population dynamics of these species. All collected samples will be returned to the Southwest Fisheries Science Center for processing and analysis.

In addition the applicant proposes to salvage bones and carcasses of dead seals and other cetacean species found on shore for importation to the U.S. These materials will be stored at the Southwest Fisheries Science Center for educational and research to purposes.

Location: Cape Shirreff, Livingston Island (ASPA #149) and the Antarctic Peninsula region

Dates: November 15, 2001 to April 15, 2006

2. *Applicant;* Permit Application No. 2002–008
   Vickie Usher Russell, CNN Producer, 132 Geneva Street, Decatur, GA 30030

Activity for Which Permit Is Requested

Enter Antarctic Specially Protected Areas. The applicant will be filming a TV documentary for CNN showcasing the exciting scientific research and remarkable and demanding working conditions scientists and support personnel endure in Antarctica. The team proposes to film research conducted in the field and therefore proposes to enter Cape Royds penguin rookery (ASPA #121) to film scientists working with the penguins. In addition the documentary team proposes to focus some attention on the early Antarctic explorers and proposes to film as many of the Ross Island historic huts as possible. Therefore they plan to enter

and film at Shackleton's Hut a Backdoor Bay, Cape Royds (ASPA #156), Scott's Terra Nova Hut, Cape Evans (ASPA #154), and Scott's Discovery Hut, Hut Point, Ross Island (ASPA #157). The documentary hopes to bring the excitement and mystery of Antarctica to viewers who might never have a chance to view it themselves.

Location:
Cape Royds penguin rookery (ASPA #121)
Scott's Terra Nova Hut, Cape Evans, Ross Island (ASPA #154)
Shackleton Hut at Backdoor Bay, Cape Royds, Ross Island (ASPA #156)
Scott's Discovery Hut, Hut Point, Ross Island (ASPA #157).

Dates: December 1, 2001 to February 28, 2002.

3. *Applicant;* Permit Application No. 2002–009
Terry J. Wilson, Department of Geological Sciences, Ohio State University, 155 S. Oval Mall, Columbus, OH 43210

Activity for Which Permit Is Requested

Enter Antarctic Specially Protected Area. The applicant proposes to study the structure of volcanoes and volcanic cinder cones in Northern Victoria Land. Part of the study area falls within Antarctic Specially Protect Area #159, the Summit of Mt. Melbourne, which the applicant proposes to enter. The study requires aerial observation and photography of all volcanic vents and cones within the area. Overflight of the site will be by helicopter at an elevation equal to or greater than ~1500 meters. Two short-duration landings are needed for ground observations to confirm mapping of the volcanic structures. The landing sites will be selected on glacial ice in-filling the caldera thereby avoiding any sensitive areas. All work in the area will be completed within one day.

Location: Summit of Mt Melbourne—ASPA #159

Dates: November 1, 2001 to January 10, 2002

4. *Applicant;* Permit Application No. 2002–010
Terry J. Wilson, Department of Geological Sciences, Ohio State University, 155 S. Oval Mall, Columbus, OH 43210

Activity for Which Permit Is Requested

Enter Antarctic Specially Protected Area. The applicant proposes to enter Cape Crozier, Antarctic Specially Protected Area #124, for the purpose of collecting samples from volcanic vents for age dating. The volcanic cones to be sampled lie partially within the ASPA at the Knoll near the southwest corner of the site, and Post Office Hill at the apex of the boundary of the northern portion of the ASPA. Access to the site will be via helicopter landing at the site designated by the Management Plan. The applicant proposes to be in the site for only a couple hours.

Location: Cape Crozier, Ross Island—ASPA #124

Dates: November 25, 2001 to February 10, 2001

5. *Applicant;* Permit Application No. 2002–011
Robert A. Blanchette, Department of Plant Pathology, University of Minnesota, St. Paul, MN 55108–6030

Activity for Which Permit Is Requested

Enter Antarctic Specially Protected Area and Import into the U.S.A. The applicant is working on a cooperative project with the Antarctic Heritage Trust (AHT) to help preserve the historic huts and artifacts in the Ross Sea region. Over the past 9–10 decades significant deterioration has occurred within the huts and on many historic artifacts. To prevent further degradation and to develop successful control strategies, the applicant proposes to enter the historic huts at Cape Evans (ASPA #154), Cape Royds (ASPA #156), Hut Point (ASPA #157), and Cape Adare (ASPA #158) to conduct basic scientific investigations to better understand the deterioration taking place in this polar environment. Areas of deterioration will be sampled in and around the huts, as well as assessing the damage from mold growth on hut interiors, and historical chemical and fuel spills. Wood and soil samples will be collected and returned to the U.S. for further analysis. The applicant proposes to salvage bones or feathers that may be contained in the soil samples.

Location:
Historic huts and environs at Cape Evans (ASPA #154), Cape Royds (ASPA #156), Hut Point (ASPA #157), and Cape Adare (ASPA #158—McMurdo Sound, Ross Island and Ross Sea vicinity.

Dates: December 1, 2001 to March 1, 2003

6. *Applicant;* Permit Application No. 2002–012
Thomas W. Yelvington, President, Raytheon Polar Services Company, 61 Inverness Drive East, Suite 300, Englewood, CO 80112

Activity for Which Permit Is Requested

Enter Antarctic Specially Protected Area. Hallett Station was jointly operated and occupied by the U.S. and New Zealand from 1957 to 1973, primarily for the study of geophysics and later for biological studies of the Adelie penguin population. Last season an Environmental Site Assessment was conducted indicating a need for a multi-year remediation program to bring closure of Hallett Station into full compliance with the Protocol on the Environmental Protection to the Antarctic Treaty. In a joint effort with the New Zealand program, participants will camp in the vicinity of old Hallett Station while conducting the remediation program. The initial phase will involve fencing off areas of petroleum contaminated surface water and soil which have been identified as posing the greatest threat to the penguin population at Cape Hallett. During this multi-year remediation project, the applicant proposes to enter Antarctic Specially Protected Area #106 for the purposes of collecting glacial ice for making water for the nearby camp. Entry into the Protected Area will be kept to a minimum.

Location: Cape Hallett, Victoria Land—ASPA #106

Dates: October 1, 2001 to April 15, 2006

7. *Applicant;* Permit Application No. 2002–013
John T. Lisle, Lockheed Martin, NASA Road One, Mail Stop C23, Houston, TX 77058

Activity for Which Permit Is Requested

Import Non-Indigenous Species into Antarctica. The applicant proposes to introduce into Antarctica the two samples each of the following commercial bacterial cultures: E. coli, Staphylococcus aureus, Pseudomonas stutzeri, Acinetobacter calcoacetius, Enterococcus aerogenes, and Clostridium perfingens. These bacterial cultures will be used as quality controls when performing assays. The assays include isolation and enumeration of fecal coliform, fecal enteroccocci, and fecal associated Clostridium perfringens. The applicant will also perform standard plasmid transfer experiments using several of the bacterial cultures. The control cultures are necessary, as the conditions under which the experiments are performed are extremely cold and a method to ensure the assays are performing correctly under Antarctic conditions is critical for data to be considered valid. All plasmid transfer experiments will be conducted within a contained system in the laboratory at McMurdo Station. All cultures and samples will be bleached and autoclaved before disposing of the material into the biohazard waste stream

at McMurdo Station for removal/retrograde from the continent.

Location: McMurdo Station, Antarctica

Dates: October 1, 2001 to November 30, 2001

8. *Applicant;* Permit Application No. 2002–014

Robert Semper, Exploratorium, 3601 Lyon Street, San Francisco, CA 94123

Activity for Which Permit Is Requested

Enter Antarctic Specially Protected Areas. The applicant proposes to enter several Antarctic Specially Protected Areas for the purpose of filming scientific research in the field and document the historic huts in the Ross Island vicinity. The applicant proposes to enter the Cape Royds penguin rookery (ASPA 121) to film researchers working with Adelie penguins. In addition, the applicant proposes to enter and film the historic huts and environs at Cape Evans (ASPA 154), Cape Royds (ASPA 156), and Discovery Hut at Hut Point (ASPA #157). The film project is an effort to create a different approach to telling the story of basic scientific research and the infrastructure it takes to support it to a vast audience of museum and online visitors. Viewers, by means of a webcast, will have the opportunity to metaphorically look over the shoulder of scientists as they work in the field or laboratory. In addition, filming the huts will add the element of history and adventure for those who are not normally interested in scientific activities.

Location:

Cape Royds penguin rookery, Ross Island—ASPA #121

Scott's Terra Nova Hut, Cape Evans, Ross Island—ASPA #154

Shackleton's Hut at Backdoor Bay, Cape Royds, Ross Island—ASPA #156

Scott's Discovery Hut, Hut Point, Ross Island—ASPA #157

Dates: November 1, 2001 to January 31, 2002

Nadene G. Kennedy,

Permit Officer, Office of Polar Programs.

[FR Doc. 01–21795 Filed 8–28–01; 8:45 am]

BILLING CODE 7555–01–M

NORTHEAST DAIRY COMPACT COMMISSION

Notice of Meeting

AGENCY: Northeast Dairy Compact Commission.

ACTION: Notice of meeting.

SUMMARY: The Compact Commission will hold its regular monthly meeting to consider matters relating to administration and enforcement of the price regulation. This meeting will be held in Concord, New Hampshire, continuing the Commission's program of holding a meeting in each of the Compact states. In addition to receiving reports and recommendations of its standing Committees, the Commission will receive a number of informational reports about the impact of the over-order price regulation in New Hampshire.

DATES: The meeting will begin at 10 a.m. on Wednesday, September 5, 2001.

ADDRESSES: The meeting will be held at the Courtyard by Marriott, Grappone Conference Center, 70 Constitution Avenue, Concord, New Hampshire 03301.

FOR FURTHER INFORMATION CONTACT: Daniel Smith, Executive Director, Northeast Dairy Compact Commission, 64 Main Street, Room 21, Montpelier, VT 05602. Telephone (802) 229–1941.

Authority: 7 U.S.C. 7256.

Dated: August 22, 2001.

Daniel Smith,

Executive Director.

[FR Doc. 01–21744 Filed 8–28–01; 8:45 am]

BILLING CODE 1650–01–P

NUCLEAR REGULATORY COMMISSION

Documents Containing Reporting or Recordkeeping Requirements: Office of Management and Budget (OMB) Review

AGENCY: Nuclear Regulatory Commission (NRC).

ACTION: Notice of the OMB review of information collection and solicitation of public comment.

SUMMARY: The NRC has recently submitted to OMB for review the following proposal for the collection of information under the provisions of the Paperwork Reduction Act of 1995 (44 U.S.C. Chapter 35).

1. *Type of submission, new, revision, or extension:* Revision.

2. *The title of the information collection:* Proposed Rule, 10 CFR Part 50, Releasing Part of a Power Reactor Site or Facility for Unrestricted Use Before the NRC Approves the License Termination Plan.

3. *The form number if applicable:* Not applicable.

4. *How often the collection is required:* Each time a licensee requests NRC approval of a release of part of its site or facility (partial site release) before NRC approval of its LTP.

5. *Who will be required or asked to report:* Power reactor licensees.

6. *An estimate of the number of responses:* An average of two partial site releases each year.

7. *The estimated number of annual respondents:* Two.

8. *An estimate of the total number of hours needed annually to complete the requirement or request:* Part 50: 934 hours (for each of 2 partial site releases: 438 hours reporting + 24 hours recordkeeping; + 10 hours for update of one LTP submittal); Part 51: 240 hours (120 hours per response).

9. *An indication of whether section 3507(d), Pub. L. 104–13 applies:* Applicable

10. *Abstract:* The NRC is amending its regulations in part 50 to establish a process for allowing power reactor licensees to release part of their site for unrestricted use before receiving approval of their License Termination Plan (LTP). The proposed rule would add section 50.83 to 10 CFR Part 50 describing the criteria and the regulatory framework that a power reactor licensee must use to request NRC approval for a partial site release. The proposed new section would allow licensees to submit a letter request or, depending on radiological conditions, a license amendment application. In either case, the submittal would document the licensee's completion of a number of evaluations, surveys, recordkeeping, and reporting that would establish licensee compliance with health and safety considerations.

Submit, by September 28, 2001, comments that address the following questions:

1. Is the proposed collection of information necessary for the NRC to properly perform its functions? Does the information have practical utility?

2. Is the burden estimate accurate?

3. Is there a way to enhance the quality, utility, and clarity of the information to be collected?

4. How can the burden of the information collection be minimized, including the use of automated collection techniques or other forms of information technology?

A copy of the submittal may be viewed free of charge at the NRC Public Document Room, One White Flint North, 11555 Rockville Pike, Room O–1 F23, Rockville, MD 20852. The proposed rule indicated in ''The title of the information collection'' is or has been published in the **Federal Register** within several days of the publication date of this **Federal Register** Notice. The

OMB clearance package and rule are available at the NRC worldwide web site: *http://www.nrc.gov/NRC/PUBLIC/OMB/index.html* for 60 days after the signature date of this notice and are also available at the rule forum site, *http://ruleforum.llnl.gov.*

Comments and questions should be directed to the OMB reviewer by September 28, 2001: Bryon Allen, Office of Information and Regulatory Affairs (3150–0011, and –0021) NEOB–10202, Office of Management and Budget, Washington, DC 20503.

Comments can also be submitted by telephone at (202) 395–3087.

The NRC Clearance Officer is Brenda Jo. Shelton, 301–415–7233.

Dated at Rockville, Maryland, this 23rd day of August 2001.

For the Nuclear Regulatory Commission.

Beth C. St. Mary,

Acting NRC Clearance Officer, Office of the Chief Information Officer.

[FR Doc. 01–21855 Filed 8–28–01; 8:45 am]

BILLING CODE 7590–01–P

NUCLEAR REGULATORY COMMISSION

[Docket No. 50–247]

Consolidated Edison Company of New York, Inc.; Indian Point Nuclear Generating Unit No. 2 Environmental Assessment and Finding of No Significant Impact

The U.S. Nuclear Regulatory Commission is considering issuance of an amendment to Facility Operating License No. DPR–26, issued to Consolidated Edison Company of New York, Inc., (the licensee), for operation of the Indian Point Nuclear Generating Unit No. 2 (IP2), located in Westchester County, New York. Therefore, as required by 10 CFR 51.21, the NRC is issuing this environmental assessment and finding of no significant impact.

Environmental Assessment

Identification of the Proposed Action

The proposed action would revise the Technical Specifications (TSs) to incorporate editorial revisions, clarifications, and corrections. Specifically, the proposed amendment would: (1) Provide updated information and corrections to the TS cover page, table of contents, and list of figures, (2) revise TS 4.5.E, ''Control Room Air Filtration System,'' to remove an incorrect system test description and provide consistent test values for system flow rate and filter efficiency, (3) revise TS 6.2.1.a, ''Facility Management and Technical Support,'' to reference the Quality Assurance Program Description as the location of the documentation rather than the Updated Final Safety Analysis Report, (4) revise TS 6.9.1.7, ''Monthly Operating Report,'' to change the recipient of the Monthly Operating Report, and (5) correct the periodicity of the Radioactive Effluent Release Report from semi-annual to annual in TS 6.15, ''Offsite Dose Calculation Manual'' and TS 6.16, ''Major Changes to Radioactive Liquid, Gaseous and Solid Waste Systems.'' In addition, the amendment would revise TS Figure 5.1–1B concerning the indicated vent location associated with Indian Point Unit 3 (IP3). The labels for the IP3 plant vent and the machine shop were reversed.

The proposed action is in accordance with the licensee's application dated December 11, 2000.

The Need for the Proposed Action

The proposed action is needed to make the TSs clearer and editorially accurate and to correct the system test description and clarify the test values for the control room air filtration system.

Environmental Impacts of the Proposed Action

The NRC has completed its evaluation of the proposed action and concludes that the changes correct editorial errors that currently exist in the TSs and provide additional clarifications. The proposed action does not modify the facility or affect the manner in which the facility is operated.

The proposed action will not significantly increase the probability or consequences of accidents, no changes are being made in the types of effluents that may be released off site, and there is no significant increase in occupational or public radiation exposure. Therefore, there are no significant radiological environmental impacts associated with the proposed action.

With regard to potential non-radiological impacts, the proposed action does not have a potential to affect any historic sites. It does not affect non-radiological plant effluents and has no other environmental impact. Therefore, there are no significant non-radiological environmental impacts associated with the proposed action.

Accordingly, the NRC concludes that there are no significant environmental impacts associated with the proposed action.

Environmental Impacts of the Alternatives to the Proposed Action

As an alternative to the proposed action, the staff considered denial of the proposed action (i.e., the ''no-action'' alternative). Denial of the application would result in no change in current environmental impacts. The environmental impacts of the proposed action and the alternative action are similar.

Alternative Use of Resources

The action does not involve the use of any different resource than those previously considered in the Final Environmental Statement for IP2, dated September 1972.

Agencies and Persons Consulted

On August 21, 2001, the staff consulted with the New York State official, Mr. John P. Spath of the Energy Research and Development Authority, regarding the environmental impact of the proposed action. The State official had no comments.

Finding of No Significant Impact

On the basis of the environmental assessment, the NRC concludes that the proposed action will not have a significant effect on the quality of the human environment. Accordingly, the NRC has determined not to prepare an environmental impact statement for the proposed action.

For further details with respect to the proposed action, see the licensee's letter dated December 11, 2000. Documents may be examined, and/or copied for a fee, at the NRC's Public Document Room, located at One White Flint North, 11555 Rockville Pike (first floor), Rockville, Maryland. Publically available records will be accessible electronically from the ADAMS Public Library component on the NRC Web site, *http://www.nrc.gov* (the Public Electronic Reading Room). If you do not have access to ADAMS or if there are problems in accessing the documents located in ADAMS, contact the NRC Public Document Room (PDR) Reference staff at 1–800–397–4209, or 301–415–4737, or by e-mail at *pdr@nrc.gov.*

Dated at Rockville, Maryland, this 21st day of August 2001.

For the Nuclear Regulatory Commission

Peter S. Tam,

Acting Chief, Section 1, Project Directorate, Division of Licensing Project Management, Office of Nuclear Reactor Regulation.

[FR Doc. 01–21853 Filed 8–28–01; 8:45 am]

BILLING CODE 7590–01–P

NUCLEAR REGULATORY COMMISSION

[Docket Nos. 50–280 and 50–281]

Virginia Electric and Power Company; Surry Power Station, Unit Nos. 1 and 2; Environmental Assessment and Finding of No Significant Impact

The U.S. Nuclear Regulatory Commission is considering issuance of amendments to Facility Operating License (FOL) Nos. DPR–32 and DPR–37, issued to Virginia Electric and Power Company (the licensee), for operation of the Surry Power Station, Units 1 and 2, respectively, located in Surry County, Virginia.

Environmental Assessment

Identification of the Proposed Action

The proposed action would revise the FOLs and the Technical Specifications (TS) to remove obsolete license conditions, make editorial changes to the FOLs, and implement associated changes to the TS and Bases as follows:

1. Removal of license conditions associated with completed facility modifications (including the Steam Generator Repair Program and support modifications related to Leak-Before-Break Technology);
2. Removal of superseded license conditions (addressing security);
3. Relocation of secondary water chemistry monitoring program requirements from the FOLs to the TS;
4. Removal of expired license conditions and TS (addressing service water piping restoration);
5. Editorial changes.

The proposed action is in accordance with the licensee's application dated September 22, 2000.

The Need for the Proposed Action

The proposed action is needed because some requirements in the Surry FOLs have become obsolete. In addition, the need for editorial changes has been identified.

Environmental Impacts of the Proposed Action

The NRC has completed its evaluation of the proposed action and concludes that the proposed license amendments and associated changes to the TS are administrative in nature and have no effect on plant equipment or plant operation.

The proposed action will not significantly increase the probability or consequences of accidents, no changes are being made in the types of effluents that may be released off site, and there is no significant increase in occupational or public radiation exposure. Therefore, there are no significant radiological environmental impacts associated with the proposed action.

With regard to potential non-radiological impacts, the proposed action does not have a potential to affect any historic sites. It does not affect non-radiological plant effluents and has no other environmental impact. Therefore, there are no significant non-radiological environmental impacts associated with the proposed action.

Accordingly, the NRC concludes that there are no significant environmental impacts associated with the proposed action.

Environmental Impacts of the Alternatives to the Proposed Action

As an alternative to the proposed action, the staff considered denial of the proposed action (i.e., the ''no-action'' alternative). Denial of the application would result in no change in current environmental impacts. The environmental impacts of the proposed action and the alternative action are similar.

Alternative Use of Resources

The action does not involve the use of any different resource than those previously considered in the Final Environmental Statement Related to Operation of Surry Power Station Unit 1, May 1972, or the Final Environmental Statement Related to Operation of Surry Power Station Unit 2, June 1972.

Agencies and Persons Consulted

On August 6, 2001, the staff consulted with the Virginia State official, Mr. Les Foldesi of the Virginia Department of Health, Bureau of Radiological Health, regarding the environmental impact of the proposed action. The State official had no comments.

Finding of No Significant Impact

On the basis of the environmental assessment, the NRC concludes that the proposed action will not have a significant effect on the quality of the human environment. Accordingly, the NRC has determined not to prepare an environmental impact statement for the proposed action.

For further details with respect to the proposed action, see the licensee's letter dated September 22, 2000. Documents may be examined, and/or copied for a fee, at the NRC's Public Document Room (PDR), located at One White Flint North, 11555 Rockville Pike (first floor), Rockville, Maryland. Publicly available records will be accessible electronically from the ADAMS Public Library component on the NRC Web site, *http://www.nrc.gov* (the Public Electronic Reading Room). If you do not have access to ADAMS or if there are problems in accessing the documents located in ADAMS, contact the NRC PDR Reference staff at 1–800–397–4209, or 301–415–4737, or by e-mail at *pdr@nrc.gov.*

Dated at Rockville, Maryland, this 23rd day of August 2001.

For the Nuclear Regulatory Commission.

Gordon E. Edison,

Senior Project Manager, Section 1, Project Directorate II, Division of Licensing Project Management, Office of Nuclear Reactor Regulation.

[FR Doc. 01–21854 Filed 8–28–01; 8:45 am]

BILLING CODE 7590–01–P

NUCLEAR REGULATORY COMMISSION

[Docket No. 72–31]

Yankee Atomic Electric Company; Issuance of Environmental Assessment and Finding of No Significant Impact

The U.S. Nuclear Regulatory Commission (NRC or Commission) is considering issuance of an exemption, pursuant to 10 CFR 72.7, from the provisions of 10 CFR 72.212(a)(2), 72.212(b)(2)(i)(A), and 72.214 to Yankee Atomic Electric Company (YAEC). The requested exemption would allow YAEC to deviate from the requirements of Certificate of Compliance 1025 (the Certificate), Appendix A, Technical Specifications (TS), Items 3.1.2, surveillance frequencies for Canister Vacumn drying pressure, 3.1.3, surveillance frequencies for Canister Helium Backfill Pressure, 3.1.5, Canister Maximum Time in Vacuum Drying, and 3.1.6, Maximum Time in Transfer Cask. The exemption would allow YAEC to use extended operating times in Limiting Condition for Operation (LCO) 3.1.5 and 3.1.6 and make surveillance requirements in LCO 3.1.2 and 3.1.3 consistent with LCO 3.1.5 for the fuel loading campaign at Yankee Nuclear Power Station (YNPS) in Rowe, Massachusetts.

Environmental Assessment (EA)

Identification of Proposed Action: By letter dated April 3, 2001, as supplemented on June 6 and July 30, 2001, YAEC requested an exemption from the requirements of 10 CFR 72.212(a)(2), 72.212(b)(2)(i)(A), and 72.214 to deviate from the requirements of Certificate of Compliance 1025, Appendix A, Items LCO 3.1.2, 3.1.3, 3.1.5 and 3.1.6. YAEC is a general

licensee, authorized by NRC to use spent fuel storage casks approved under 10 CFR part 72, Subpart K.

YAEC plans to use the NAC–MPC cask system to store spent nuclear fuel, generated at YNPS, at an independent spent fuel storage installation (ISFSI) located in Rowe, Massachusetts, on the YNPS site. The YNPS ISFSI has been constructed for interim dry storage of spent nuclear fuel.

By exempting YAEC from 10 CFR 72.212(a)(2), 72.212(b)(2)(i)(A), and 72.214, YAEC will be authorized to extend loaded canister vacuum drying and the time spent fuel is in the transfer cask for canister heat loads that are lower than the design basis heat load.

The time duration from completion of draining the Canister through completion of vacuum dryness testing and the introduction of helium backfill shall not exceed the time shown for the specified heat loads:

Total heat loads (L)(kW)	Time limit (hours)
10.5 < L ≤ 12.5	38.
8.5 < L ≤ 10.5	48.
6.5 < L ≤ 8.5	58.
4.5 < L ≤ 6.5	83.
L ≤ 4.5	Not limited.

The time duration from end of external forced air or in-pool cooling of the Canister through completion of vacuum dryness testing and the introduction of helium backfill shall not exceed the time shown for the specified heat loads:

Total heat loads (L)(kW)	Time limit (hours)	
	Forced air	In-pool
10.5 < L ≤ 12.5	10	10
8.5 < L ≤ 10.5	12	12
6.5 < L ≤ 8.5	16	16
4.5 < L ≤ 6.5	40	40

The time duration from the introduction of helium backfill of the Canister through completion of the Canister transfer operation from the Transfer Cask to the Concrete cask is not limited.

The surveillance requirements to verify canister cavity vacumn drying pressure is within limits is to be performed prior to transport operations.

The surveillance requirements to verify canister helium backfill pressure is within limits is to be performed prior to transport operations.

The specifications above would be in lieu of those in the current Certificate of Compliance No. 1025, Rev. 0, Appendix A, LCO 3.1.2, 3.1.3, 3.1.5 and 3.1.6. The proposed action before the Commission is whether to grant this exemption under 10 CFR 72.7.

On September 9, 2000, as supplemented July 27, 2001, the cask designer, NAC International (NAC), submitted to NRC an application to amend Certificate of Compliance No. 1025. The requested amendment includes the same revisions to LCO 3.1.2, 3.1.3, 3.1.5 and 3.1.6 in Appendix A to the Certificate as requested in this exemption. The NRC staff has reviewed the application and determined that extending operating times in TS LCO 3.1.5 and 3.1.6 and revising the surveillance requirements in LCO 3.1.2 and 3.1.3 would have minimal impact on the design basis and would not pose a threat to public health and safety.

Need for the Proposed Action: The revised LCO 3.1.5 and 3.1.6 increase TS times, which are likely to reduce the frequency of entering LCO action statements, thus, reducing radiation doses to workers. The current TS LCO 3.1.5 and 3.1.6 time limits are based on canisters with maximum heat load and the probability for entering LCO action statements will significantly increase for canisters that are lower than the design basis heat load. If action statements are entered as a result of TS requirements without a safety significance, workers will be exposed to low radiation fields for longer periods of time. This would not be consistent with As Low As Reasonably Achievable (ALARA) practices. Workers should be able to conduct loading operations without facing unnecessary time/schedule pressure with sufficient operational flexibility. Unless the exemption is granted or the Certificate is amended, the TS LCO 3.1.5 and 3.1.6 action statements will likely be unnecessarily entered, resulting in additional radiation doses to workers. The surveillance requirements in TS LCO 3.1.2 and 3.1.3 are being changed to be consistent with the revised TS LCO 3.1.5. Because the 10 CFR part 72 rulemaking to amend the Certificate will not be completed prior to the date that YNPS plans to begin loading fuel into the NAC–MPC cask systems, the NRC is proposing to grant this exemption based on the staff's technical review of information submitted by YAEC and NAC.

Environmental Impacts of the Proposed Action: It has already been determined by the Commission that spent fuel can be stored safely and without significant environmental impact at an onsite ISFSI in the NAC–MPC cask system (65 FR 12444, dated March 9, 2000). Extending the TS times will not increase the probability or consequences of accidents. No changes have been requested to the types or quantities of any radiological effluents that may be released offsite, and there is no significant increase in occupational or public radiation exposure. Occupational radiation exposure will be decreased by the avoidance of unnecessarily entering the action statements in LCO 3.1.5 and 3.1.6. There are no significant radiological environmental impacts associated with the proposed action.

Alternative to the Proposed Action: Since there is no significant environmental impact associated with the proposed action, alternatives with equal or greater environmental impact are not evaluated. The alternative to the proposed action would be to deny approval of the exemption and use the TS times in the current Certificate. Denial of the exemption could potentially lead into unnecessarily entering the TS LCO action statements 3.1.5 and 3.1.6 resulting in increased radiation doses to workers.

Agencies and Persons Consulted: On June 22, 2001, Mr. Jim Muckerhide, Nuclear Engineer, Nuclear Safety, of Massachusetts Emergency Management Agency was contacted about the Environmental Assessment for the proposed action and had no comments.

Finding of No Significant Impact

The environmental impacts of the proposed action have been reviewed in accordance with the requirements set forth in 10 CFR part 51. Based upon the foregoing EA, the Commission finds that the proposed action of granting an exemption from 10 CFR 72.212(a)(2), 72.212(b)(2)(i)(A), and 72.214 so that YAEC may use revised TS time at YNPS ISFSI will not significantly impact the quality of the human environment. Accordingly, the Commission has determined not to prepare an environmental impact statement for the proposed exemption.

The NRC maintains an Agencywide Documents Access and Management System (ADAMS), which provides text and image files of NRC's public documents. These documents may be accessed through the NRC's Public Electronic Reading Room on the Internet at http://www.nrc.gov/NRC/ADAMS/index.html. If you do not have access to ADAMS or if there are problems in accessing the documents located in ADAMS, contact the NRC Public Document Room (PDR) Reference staff at 1–800–397–4209, 301–415–4737 or by e-mail to pdr@nrc.gov.

Dated at Rockville, Maryland this 22nd day of August 2001.

For the Nuclear Regulatory Commission.

E. William Brach,

Director, Spent Fuel Project Office, Office of Nuclear Material Safety and Safeguards.

[FR Doc. 01–21856 Filed 8–28–01; 8:45 am]

BILLING CODE 7590–01–P

OFFICE OF MANAGEMENT AND BUDGET

Budget Analysis Branch; Sequestration Update Report

AGENCY: Office of Management and Budget—Budget Analysis Branch.

ACTION: Notice of transmittal of the Sequestration Update Report to the President and Congress for Fiscal Year 2002.

SUMMARY: Pursuant to Section 254(b) of the Balanced Budget and Emergency Control Act of 1985, as amended, the Office of Management and Budget hereby reports that it has submitted its Sequestration Update Report for Fiscal Year 2002 to the President, the Speaker of the House of Representatives, and the President of the Senate.

FOR FURTHER INFORMATION CONTACT: Sarah Lee, Budget Analysis Branch—202/395–3674.

Dated: August 23, 2001.

Cynthia Christian,

Assistant Director for Administration.

[FR Doc. 01–21737 Filed 8–28–01; 8:45 am]

BILLING CODE 3110–01–P

SECURITIES AND EXCHANGE COMMISSION

Submission for OMB Review; Comment Request

Upon Written Request; Copies Available From: Securities and Exchange Commission, Office of Filings and Information Services, Washington, DC 20549

Extension:

Regulation 12B, OMB Control No. 3235–0062, SEC File No. 270–70

Form 15, OMB Control No. 3235–0167, SEC File No. 270–170

Form F–4, OMB Control No. 3235–0325, SEC File No. 270–288

Notice is hereby given that, pursuant to the Paperwork Reduction Act of 1995 (44 U.S.C. 3501 et seq.) the Securities and Exchange Commission (''Commission'') has submitted to the Office of Management and Budget requests for extension of the previously approved collections of information discussed below.

Regulation 12B includes rules governing Securities Exchange Act of 1934 (''Exchange Act'') registration statements and reports. The purpose of the regulation is to set forth guidelines for the uniform preparation of Exchange Act documents. All information is provided to the public for review. The information required is filed on occasion and is mandatory. Regulation 12B is assigned one burden hour for administrative convenience because the regulation simply prescribes the disclosure that must appear in other filings under the federal securities laws. Finally, persons who respond to the collection of information prescribed to in Regulation 12B are not required to respond unless the collection of information displays a currently valid control number.

Form 15 is a certification of termination of a class of security under Section 12(g) or notice of suspension of duty to file reports pursuant to Sections 13 and 15(d) of the Securities Exchange Act of 1934. The information collected is to inform the public when a registrant does not file periodic reports. All information is provided to the public for review. Approximately 2,000 issuers file Form 15 annually and it takes approximately a total of 1.5 hours per response for a total of 3,000 annual burden hours. Finally, persons who respond to the collection of information contained in Form 15 are not required to respond unless the form displays a currently valid control number.

Form F–4 is used by foreign issuers to register securities in business combinations, reorganizations and exchange offers pursuant to federal securities laws. If the information disclosed on Form F–4 were not required, the objectives of the Securities Act would not be met. The information required is filed on occasion and is mandatory. All information is provided to the public for review. Form F–4 is filed by foreign issuers. Form F–4 takes approximately 1,311 hours per response to prepare and is filed by 450 respondents. It is estimated that 50% of the 589,950 total burden hours (294,975 hours) would be prepared by the company. Finally, persons who respond to the collection of information contained in Form F–4 are not required to respond unless the form displays a currently valid control number.

Written comments regarding the above information should be directed to the following persons: (i) Desk Officer for the Securities and Exchange Commission, Office of Information and Regulatory Affairs, Office of Management and Budget, Room 10102, New Executive Office Building, Washington, DC 20503; and (ii) Michael E. Bartell, Associate Executive Director, Office of Information Technology, Securities and Exchange Commission, 450 Fifth Street, NW., Washington, DC 20549. Comments must be submitted to OMB within 30 days of this notice.

Dated: August 21, 2001.

Jonathan G. Katz,

Secretary.

[FR Doc. 01–21788 Filed 8–28–01; 8:45 am]

BILLING CODE 8010–01–M

SECURITIES AND EXCHANGE COMMISSION

[Investment Company Act Release No. 25134; 812–11880]

Commonfund Institutional Funds, et al.; Notice of Application

August 23, 2001.

AGENCY: Securities and Exchange Commission (''Commission'').

ACTION: Notice of an application under section 6(c) of the Investment Company Act of 1940 (the ''Act'') for an exemption from section 15(a) of the Act and rule 18f–2 under the Act, as well as from certain disclosure requirements.

SUMMARY: Applicants request an order to permit them to enter into and materially amend subadvisory agreements without shareholder approval and to grant relief from certain disclosure requirements.

APPLICANTS: Commonfund Institutional Funds (the ''Company'') and Commonfund Asset Management Company, Inc. ('' COMANCO'').

FILING DATES: The application was filed on December 13, 1999 and amended on July 19, 2001.

HEARING OR NOTIFICATION OF HEARING: An order granting the application will be issued unless the Commission orders a hearing. Interested persons may request a hearing by writing to the Commission's Secretary and serving applicants with a copy of the request, personally or by mail. Hearing requests should be received by the Commission by 5:30 p.m. on September 17, 2001, and should be accompanied by proof of service on applicants in the form of an affidavit or, for lawyers, a certificate of service. Hearing requests should state the nature of the writer's interest, the reason for the request, and the issues contested. Persons who wish to be notified of a hearing may request notification by writing to the Commission's Secretary.

ADDRESSES: Secretary, Commission 450 Fifth Street, NW., Washington, DC 20549–0609. Applicants, c/o Timothy

W. Levin, Esq., Morgan, Lewis & Bockius LLP, 1701 Market Street, Philadelphia, PA 19103.

FOR FURTHER INFORMATION CONTACT: Emerson S. Davis, Sr., Senior Counsel, at (202) 942–0714, or Janet M. Grossnickle, Branch Chief, at (202) 942–0564 (Division of Investment Management, Office of Investment Company Regulation).

SUPPLEMENTARY INFORMATION: The following is a summary of the application. The complete application may be obtained for a fee from the Commission's Public Reference Branch, 450 Fifth Street, NW., Washington, DC 20549–0102 (telephone (202) 942–8090).

Applicants' Representations

1. The Company, a Delaware business trust, is registered under the Act as an open-end management investment company. The Company currently offers eight series (together the ''Funds,'' and each a ''Fund''). Each Fund has its own investment objectives, policies and restrictions. COMANCO, registered under the Investment Advisers Act of 1940 (''Advisers Act''), serves as the investment adviser to each Fund pursuant to an investment advisory agreement with the Company (''Advisory Agreement'') that was approved by the board of directors of the Company (the ''Board''), including a majority of the directors who are not ''interested persons,'' as defined in section 2(a)(19) of the Act (''Independent Directors''), and the sole shareholder of each Fund.[1]

2. Under the terms of the Advisory Agreement. COMANCO serves as investment adviser to each Fund and provides investment sub-adviser selection, monitoring and asset allocation services to the Funds and may hire one or more sub-advisers (''Sub-Adviser'') to exercise day-to-day investment discretion over all or a portion of the assets of a Fund pursuant to separate investment sub-advisory agreements. In its capacity as investment adviser, COMANCO is required (a) to perform due diligence on prospective Sub-Advisers; (b) to communicate performance targets and evaluations to Sub-Advisers; (c) to supervise compliance with each Fund's investment objectives and policies; and (d) to recommend to the Board whether sub-advisory agreements should be renewed, modified or terminated. Each Sub-Adviser is or will be either registered or exempt from registration under the Advisers Act. Sub-Advisers are recommended to the Board by COMANCO and selected and approved by the Board, including a majority of the Independent Directors. Each Sub-adviser's free is paid by COMANCO out of the management fee received by COMANCO from the respective Fund.

3. COMANCO will recommend and, if the Board, including a majority of the Independent Directors, approves the recommendations monitor for the Fund one or more Sub-Advisers that follow a range of investment styles. The Board will rely upon COMANCO to monitor the Sub-Advisers' performance and their compliance with a Fund's investment objectives and policies, and to recommend the hiring and or termination of Sub-Advisers. In using a manager of managers approach, COMANCO believes that the likelihood of outperformance is increased through the use of multiple Sub-Advisers in appropriate cases because underperformance by a single Sub-Adviser would not necessarily result in overall underperformance. The Funds currently use 24 Sub-Advisers.

4. Applicants request relief to permit COMANCO, subject to the Board's approval, to enter into and materially amend sub-advisory agreements without shareholder approval. The requested relief will not extend to a Sub-Adviser that is an affiliated person, as defined in section 2(a)(3) of the Act, of a Fund or COMANCO, other than by reason of serving as a Sub-Adviser to one or more of the Funds (an ''Affiliated Manager'').

5. Applicants also request an exemption from the various disclosure provisions described below that may require the Funds to disclose the fees paid by COMANCO to the Sub Advisers. An exemption is requested to permit a Fund to disclose (as both a dollar amount and as a percentage of a Fund's net assets): (a) aggregate fees paid to COMANCO and any Affiliated Managers; and (b) aggregate fees paid to Sub-Advisers other than Affiliated Managers (''Aggregate Fees''). If a Fund employs an Affiliated Manager, the Fund will provide separate disclosure of any fees paid to the Affiliated Manager.

Applicant's Legal Analysis

1. Section 15(a) of the Act provides, in relevant part, that it is unlawful for any person to act as an investment adviser to a registered investment company except pursuant to a written contract that has been approved by the vote of the majority of the company's outstanding voting securities. Rule 18f–2 under the Act provides that each series or class of stock in a series company affected by a matter must approve such matter if the Act requires shareholder approval.

2. Form N–1A is the registration statement used by open-end investment companies. Item 15(a)(3) of Form N–1A requires disclosure of the method and amount of the investment adviser's compensation.

3. Rule 20a–1 under the Act requires proxies solicited with respect to an investment company to comply with Schedule 14A under the Securities Exchange Act of 1934 (the ''Exchange Act''). Items 22(c)(1)(ii), 22(c)(8), and 22(c)(9) of Schedule 14A, taken together, require a proxy statement for a shareholder meeting at which the advisory contract will be voted upon to include the ''rate of compensation of the investment adviser,'' the ''aggregate amount of the investment adviser's fees,'' a description of ''terms of the contract to be acted upon,'' and, if a change in the advisory fee is proposed, the existing and proposed fees and the difference between the two fees.

4. From N–SAR is the semi-annual report filed with the Commission by registered investment companies. Item 48 of Form N–SAR requires investment companies to disclose the rate schedule for fees paid to their investment advisers, including the Sub-Advisers.

5. Regulation S–X sets forth the requirements for financial statements required to be included as part of investment company registration statements and shareholder reports filed with the Commission. Sections 6–07(2)(a), (b), and (c) of Regulation S–X require that investment companies include in their financial statements information about investment advisory fees.

6. Section 6(c) of the Act provides that the Commission may exempt any person, security, or transaction or any class or classes of persons, securities, or transactions form any provision of the Act, or from any rule thereunder, if such exemption is necessary or appropriate in the public interest and consistent with the protection of investors and the purposes fairly intended by the policy and provisions of the Act. Applicants believe that the requested relief meets

[1] Applicants also request relief with respect to future Funds, and any other registered open-end management investment companies or series thereof (a) that are advised by COMANCO or any entity controlling, controlled by, or under common control with COMANCO, and (b) use the multi-manager structure described in the application (''Future Funds,'' and together with the Funds the ''Funds''). Any fund that relies on the requested order will do so only in accordance with the terms and conditions contained in the application. The Company is the only existing investment company that currently intends to rely on the order. In the name of any Fund contains the name of a Sub-Adviser, the Fund's name will also contain the name Commonfund, COMANCO or the name of the entity controlling, controlled by, or under common control with COMANCO that serves as the primary adviser to such Fund.

this standard for the reasons discussed below.

7. Applicants assert that by investing in a Fund, shareholders, in effect, will hire COMANCO to manage the Fund's assets by selecting and monitoring Sub-Advisers rather than by hiring its own employees to manage assets directly. Applicants state that investors will purchase Fund shares to gain access to COMANCO's expertise in overseeing Sub-Advisers. Applicants further assert that the requested relief will reduce Fund expenses and permit the Funds to operate more efficiently. Applicants note that the Advisory Agreement will remain subject to the shareholder approval requirements of section 15(a) of the Act and rule 18f–2 under the Act.

8. Applicants assert that many Sub-Advisers charge their customers for advisory services according to a ''posted'' rate schedule. Applicants state that while Sub-Advisers are willing to negotiate fees lower than those posted in the schedule, particularly with large institutional clients, they are reluctant to do so where the fees are disclosed to other prospective and existing customers. Applicants submit that the relief will encourage Sub-Advisers to negotiate lower advisory fees with COMANCO, the benefits of which are likely to be passed on to shareholders.

Applicants' Conditions

Applicants agree that any order granting the requested relief will be subject to the following conditions:

1. Before a Fund may rely on the requested order, the operation of the Fund in the manner described in the application will be approved by a majority of the Fund's outstanding voting securities, as defined in the Act, or, in the case of a Fund whose public shareholders purchase shares on the basis of a prospectus containing the disclosure contemplated by condition 2 below, by the sole shareholder prior to offering shares of the Fund to the public.

2. Each Fund will disclose in its prospectus the existence, substance and effect of any order granted pursuant to this application. In addition, each Fund will hold itself out to the public as employing the ''manager of managers'' approach described in this application. The prospectus will prominently disclose that COMANCO has ultimate responsibility (subject to oversight by the Board) for the investment performance of a Fund due to its responsibility to oversee Sub-Advisers and recommend their hiring, termination, and replacement.

3. Within 90 days of the hiring of any new Sub-Adviser, COMANCO will furnish shareholders of the affected Fund with all of the information about the new Sub-Adviser that would be contained in a proxy statement, except as modified by the order to permit the disclosure of Aggregate Fees. This information will include the disclosure of Aggregate Fees and any change in such disclosure caused by the addition of a new Sub-Adviser. COMANCO will meet this condition by providing shareholders with an information statement meeting the requirements of Regulation 14C and Schedule 14C and Item 22 of Schedule 14A under the Exchange Act, except as modified by the order to permit the disclosure of Aggregate Fees.

4. COMANCO will not enter into a sub-advisory agreement with any Affiliated Manager without such agreement, including the compensation to be paid thereunder, being approved by the shareholders of the Fund.

5. At all times, a majority of the Board will be Independent Directors and the nomination of new or additional Independent Directors will be placed within the discretion of the then-existing Independent Directors.

6. When a change of Sub-Adviser is proposed for a Fund with an Affiliated Manager, the Board, including a majority of the Independent Directors, will make a separate funding, reflected in the Board minutes, that the change is in the best interests of the Fund and its shareholders and does not involve a conflict of interest from which COMANCO or the Affiliated Manager derives an inappropriate advantage.

7. COMANCO will provide general management services to each Fund, and, subject to review and approval by the Board, will: (a) Set the Fund's overall investment strategies; (b) evaluate, select and recommend Sub-Advisers to manage all or a part of the Fund's assets; (c) when appropriate, allocate and reallocate the Fund's assets among multiple Sub-Advisers; (d) monitor and evaluate the Sub-Adviser's performance; and (e) implement procedures reasonably designed to ensure that the Sub-Advisers comply with the Fund's investment objective, policies, and restrictions of the Fund.

8. No director or officer of the Company, or director or officer of COMANCO will own directly or indirectly (other than through a pooled investment vehicle over which such person does not have control) any interest in a Sub-Adviser except for (a) ownership of interests in COMANCO or an entity that controls, is controlled by or is under common control with COMANCO; or (b) ownership of less than 1% of the outstanding securities of any class of equity or debt of a publicly-traded company that is either a Sub-Adviser or an entity that controls, is controlled by, or is under common control with a Sub-Adviser.

Each Fund will disclose in its registration statement the Aggregate Fees.

10. Independent legal counsel, as defined in rule 0–1(a)(6) under the Act, will be engaged to represent the Independent Directors. The selection of such counsel will be within the discretion of the then-existing Independent Directors.

11. COMANCO will provide the Board, no less frequently than quarterly, with information about COMANCO's profitability on a per-Fund basis. The information will reflect the impact on profitability of the hiring or termination of any Sub-Adviser during the applicable quarter.

12. Whenever a Sub-Adviser is hired or terminated, COMANCO will provide the Board information showing the expected impact on COMANCO's profitability.

For the Commission, by the Division of Investment Management, under delegated authority.

Margaret H. McFarland,

Deputy Secretary.

[FR Doc. 01–21738 Filed 8–28–01; 8:45 am]

BILLING CODE 8010–01–M

SECURITIES AND EXCHANGE COMMISSION

[Rel. No. IC–25135; 812–12416]

Master Investment Portfolio, et al.; Notice of Application

August 23, 2001.

AGENCY: Securities and Exchange Commission (''Commission'').

ACTION: Notice of application for an order under section 12(d)(1)(J) of the Investment Company Act of 1940 (''Act'') exempting applicants from sections 12(d)(1)(A) and (B) of the Act, sections 6(c) and 17(b) of the Act exempting applicants from section 17(a) of the Act, and section 17(d) of the Act and rule 17d–1 under the Act permitting certain joint transactions.

SUMMARY OF APPLICATION: Applicants request an order to permit certain registered open-end management investment companies to invest uninvested cash and cash collateral in one or more affiliated money market funds.

APPLICANTS: Master Investment Portfolio (''MIP Portfolios''), Barclays Global Investors Funds, Inc. (''BGI Funds''),

iShares Trust, iShares, Inc. and Barclays Global Fund Advisors (''BGFA'').

FILING DATES: The application was filed on January 22, 2001. Applicants have agreed to file an amendment during the notice period, the substance of which is reflected in this notice.

HEARING OR NOTIFICATION OF HEARING: An order granting the applications will be issued unless the Commission orders a hearing. Interested persons may request a hearing by writing to the Commission's Secretary and serving applicants with a copy of the request, personally or by mail. Hearing requests should be received by the Commission by 5:30 p.m. on September 17, 2001, and should be accompanied by proof of service on applicants, in the form of an affidavit or, for lawyers, a certificate of service. Hearing requests should state the nature of the writer's interest, the reason for the request, and the issues contested. Persons may request notification of a hearing by writing to the Commission's Secretary.

ADDRESSES: Secretary, Commission, 450 Fifth Street, NW., Washington, DC 20549–0609. Applicants, c/o Marco E. Adelfio, Esq., Jonathan F. Cayne, Esq., Morrison & Foerster, LLP, 2000 Pennsylvania Avenue, NW., Washington, DC 20006.

FOR FURTHER INFORMATION CONTACT: John L. Sullivan, Senior Counsel, at (202) 942–0681, or Mary Kay Frech, Branch Chief, at (202) 942–0564 (Division of Investment Management, Office of Investment Company Regulation).

SUPPLEMENTARY INFORMATION: The following is a summary of the application. The complete application may be obtained for a fee at the Commission's Public Reference Branch, 450 Fifth Street, NW., Washington, DC 20549–0102 (tel. 202–942–8090).

Applicants' Representatives

1. Each of MIP Portfolios and iShares Trust is organized as a Delaware business trust and is registered under the Act as an open-end management investment company. MIP Portfolios currently has 13 series, and iShares Trust has 46 series. Each of BGI Funds and iShares, Inc. is organized as a Maryland corporation and is registered under the Act as an open-end management investment company. BGI Funds currently has 10 series, and iShares, Inc. has 21 series.[1]

2. BFFA is registered as an investment adviser under the Investment Advisers Act of 1940. BGFA serves as the investment adviser to MIP Portfolios, iShares Trust and iShares, Inc. Currently, each series of BGI Funds is a ''feeder fund'' that seeks to achieve its investment objective by investing all of its net investable assets, in reliance on section 12(d)(1)(E) of the Act, in its corresponding MIP Portfolio, which is a ''master fund.'' Applicants also request relief for all other registered management investment companies and any series thereof now or hereafter existing that are advised by BGFA or any other person controlling, controlled by or under common control with BGFA (collectively, with MIP Portfolios, BGI Funds, iShares Trust and iShares, Inc. and each of their series now and hereafter existing, the ''Funds'').

3. Each Fund has, or may be expected to have, cash that has not been invested in portfolio securities (''Uninvested Cash''). Uninvested Cash may result from a variety of sources, including dividends or interest received from portfolio securities, unsettled securities transactions, reserves held for investment strategy purposes, scheduled maturity of investments, liquidation of investment securities to meet anticipated redemptions or dividend payments, and new monies received from investors. Certain of the Funds also may participate in a securities lending program under which a Fund may lend its portfolio securities to registered broker-dealers or other institutional investors (''Securities Lending Program''). The loans are continuously secured by collateral equal at all times to at least the market value of the securities loaned. Collateral for these loans may include cash (''Cash Collateral,'' and together with Uninvested Cash, ''Cash Balances''). Currently, BGFA may invest Cash Balances directly in money market instruments or other short-term debt obligations.

4. Applicants request an order to permit (a) each of the Funds to invest their Cash Balances in one or more of the Funds that are money market funds and comply with rule 2a–7 under the Act (''Money Market Funds'') (a Fund that purchases shares of a Money Market Fund is referred to as an ''Investing Portfolio''); (b) the Money Market Funds to sell their shares to, and redeem their shares from, the Investing Portfolios; and (c) BGFA to effect such purchases and sales. Applicants submit that investing Cash Balances in shares of the Money Market Funds is in the best interest of the Investing Portfolios and their shareholders because such investment may reduce the risk of counterparty default on repurchase agreements and the market risk associated with direct purchases of short-term obligations, while providing high current money market rates of return, ready liquidity, and increased diversity of holdings.

Applicants' Legal Analysis

1. Section 12(d)(1)(A) of the Act provides, in pertinent part, that no registered investment company may acquire securities of another investment company if such securities represent more than 3% of the acquired company's outstanding voting stock, more than 5% of the acquiring company's total assets, or if such securities, together with the securities of other acquired investment companies, represent more than 10% of the acquiring company's total assets. Section 12(d)(1)(B) of the Act, in pertinent part, provides that no registered open-end investment company may sell its securities to another investment company if the sale will cause the acquiring company to own more than 3% of the acquired company's voting stock, or if the sale will cause more than 10% of the acquired company's voting stock to be owned investment companies.

2. Section 12(d)(1)(J) of the Act provides that the Commission may exempt any person, security or transaction from any provision of section 12(d)(1) if, and to the extent that, such exemption is consistent with the public interest and the protection of investors. Applicants request relief under section 12(d)(1)(J) from the limitations of sections 12(d)(1)(A) and (B) to permit each Investing Portfolio to invest Cash Balances in the Money Market Funds, so long as the Investing Portfolio's aggregate investment of Uninvested Cash in shares of the Money Market Funds does not exceed 25% of the Investing Portfolio's total assets at any time.

3. Applicants state that the proposed arrangements would not result in the abuses that sections 12(d)(1)(A) and (B) were intended to prevent. Applicants state that each Money Market Fund will maintain a highly liquid portfolio and will not be susceptible to undue control. Applicants represent that the proposed arrangement will not result in an inappropriate layering of fees because shares of the Money Market Funds purchased by the Investing Portfolios will not be subject to a sales load, redemption fee, distribution fee under a plan adopted in accordance with rule 12b–1 under the Act, or service fee (as defined in rule 2830(b)(9) of the

[1] All investment companies that currently intend to rely on the requested relief have been named as applicants, and any existing or future registered management investment company that relies on the requested relief in the future will do so only in accordance with the terms and conditions of the application.

Conduct Rules of the National Association of Securities Dealers, Inc. (''NASD'')), or if such shares are subject to any distribution or service fee, BGFA will waive its advisory fee for each Investing Portfolio in an amount that offsets the amount of such distribution and/or service fee incurred by the Investing Portfolio. Applicants represent that no Money Market Fund will acquire securities of any other investment company in excess of the limitations contained in section 12(d)(1)(A) of the Act, except to the extent the Money Market Fund is a feeder Fund investing in a master Fund that is in the same group of investment companies as the feeder Fund in reliance on section 12(d)(1)(E) of the Act (''Underlying Feeder Fund''). Applicants also represent that if a Money Market Fund offers more than one class of shares, and Investing Portfolio will invest its Cash Balances only in the class with the lowest expense ratio (taking into account the expected impact of the Investing Portfolio's investment) at the time of investment.

4. Section 17(a) of the Act makes it unlawful for any affiliated person of a registered investment company, or an affiliated person of such person, acting as principal, to sell or purchase any security to or from the company. Section 2(a)(3) of the Act defines an ''affiliated person'' of another person to include, among others: (a) Any person directly or indirectly owning, controlling, or holding with power to vote 5% or more of the outstanding voting securities of the other person; (b) any person 5% or more of whose securities are directly or indirectly owned, controlled, or held with power to vote by the other person; and (c) any person directly or indirectly controlling, controlled by, or under common control with the other person. Applicants state that, because the Investing Portfolios and the Money Market Funds share a common investment adviser and a common board of directors/trustees, each Investing Portfolio may be deemed to be under common control with each of the Money Market Funds. Furthermore, an Investing Portfolio may own more than 5% of the outstanding voting securities of a Money Market Fund, thus making the Investing Portfolio an affiliated person of the Money Market Fund. As a result of these affiliations, section 17(a) would prohibit the sale of the shares of the Money Market Funds to the Investing Portfolios, and the redemption of the shares by the Money Market Funds.

5. Section 17(b) of the Act authorizes the Commission to exempt a transaction from section 17(a) if the terms of the proposed transaction, including the consideration to be paid or received, are reasonable and fair and do not involve overreaching on the part of any person concerned, and the proposed transaction is consistent with the general purposes of the Act. Section 6(c) of the Act permits the Commission to exempt any persons or transactions from any provision of the Act, if the exemption is necessary or appropriate in the public interest and consistent with the protection of investors and the purposes fairly intended by the policy and provisions of the Act.

6. Applicants submits that their request for relief to permit the purchase and redemption of shares of the Money Market Funds by the Investing Portfolios satisfies the standards in sections 6(c) and 17(b) of the Act. Applicants note that shares of the Money Market Funds will be purchased and redeemed at their net asset value, the same consideration paid and received for these shares by any other shareholders. Applicants state that the Investing Portfolios will retain their ability to invest their Cash Balances directly in money market instruments as authorized by their respective investment objectives and policies if they believe they can obtain a higher rate of return, or for any other reason. Applicants also state that each Money Market Fund has the right to discontinue selling shares to any of the Investing Portfolios if the Money Market Fund's board of directors/trustees (''Board'') determines that such sale would adversely affect its portfolio management and operations.

7. Section 17(d) of the Act and rule 17d–1 under the Act prohibit an affiliated person of a registered investment company, acting as principal, from participating in or effecting any transaction in connection with any joint enterprise or other joint arrangement or profit sharing plan in which the investment company participates, without and order of the Commission. Applicants state that each Investing Portfolio, by purchasing and redeeming shares of the Money Market Funds, BGFA, by managing the assets of the Investing Portfolios investing in the Money Market Funds, and the Money Market Funds, by selling shares to, and redeeming them from, the Investing Portfolios, could be deemed to be participants in a joint enterprise or arrangement within the meaning of section 17(d) of the Act and rule 17d–1 under the Act.

8. Rule 17d–1 permits the Commission to approve a proposed joint transaction covered by the terms of section 17(d) of the Act. In determining whether to approve a transaction, the Commission is to consider whether the proposed transaction is consistent with the provisions, policies, and purposes of the Act, and the extent to which the participation is on a basis different from or less advantageous than that of other participants. Applicants submit that the Investing Portfolios will be treated like any other investor in the Money Market Funds. The Investing Portfolios will purchase and sell shares on the same terms and on the same basis as shares are purchased and sold by all other shareholders of the Money Market Funds.

Applicants' Conditions

Applicants agree that the order granting the requested relief will be subject to the following conditions:

1. The shares of the Money Market Funds sold to and redeemed from the Investing Portfolios will not be subject to a sales load, redemption fee, distribution fee under a 12b–1 plan, or service fee (as defined in rule 2830(b)(9) of the Conduct Rules of the NASD), or if such shares are subject to any such distribution fee or service fee, BGFA will waive its advisory fee for each Investing Portfolio in an amount that offsets the amount of such distribution and/or service fees incurred by the Investing Portfolio.

2. If BGFA or a person controlling, controlled by or under common control with BGFA receives a fee from any Money Market Fund for acting as its investment adviser with respect to assets invested by an Investing Portfolio, then before the next meeting of the Board of an Investing Portfolio is held for the purpose of voting on the Investing Portfolio's advisory contract pursuant to section 15 of the Act, BGFA will provide the Board with specific information regarding the approximate cost to BGFA for, or portion of the advisory fee under the existing advisory contract attributable to, managing the Uninvested Cash of the Investing Portfolio that can be expected to be invested in the Money Market Funds. Before approving any advisory contract for an Investing Portfolio pursuant to section 15, the Board, including a majority of the directors/trustees who are not ''interested persons'' within the meaning of section 2(a)(19) of the Act (''Independent Directors/Trustees''), shall consider to what extent, if any, the advisory fees charged to the Investing Portfolio by BGFA should be reduced to account for reduced services provided to the Investing Portfolio by BGFA as a result of Uninvested Cash being invested in the Money Market Funds. The minute books of the Investing

Portfolio will fully record the Board's consideration in approving the advisory contract, including the considerations relating to fees referred to above.

3. Each of the Investing Portfolios will invest Uninvested Cash in, and hold shares of, the Money Market Funds only to the extent that the Investing Portfolio's aggregate investment of Uninvested Cash in the Money Market Funds does not exceed 25% of the Investing Portfolio's total assets. For purposes of this limitation, each Investing Portfolio or series thereof will be treated as a separate investment company.

4. Investment by an Investing Portfolio of Cash Balances in shares of the Money Market Funds will be in accordance with each Investing Portfolio's respective investment restrictions and will be consistent with each Investing Portfolio's policies as set forth in its prospectus and statement of additional information.

5. Each Investing Portfolio, each Money Market Fund, and any future Fund that may rely on the order shall be advised by BGFA, or a person controlling, controlled by, or under common control with BGFA.

6. No Money Market Fund in which an Investing Portfolio invests shall acquire securities of any other investment company in excess of the percentage limits contained in section 12(d)(1)(A) of the Act, except to the extent a Money Market Fund is an Underlying Feeder Fund.

7. Before an Investing Portfolio may participate in the Securities Lending Program, a majority of the Board (including a majority of the Independent Directors/Trustees) of the Investing Portfolio will approve of the Investing Portfolio's participation in the Securities Lending Program. Such directors/trustees also will evaluate the securities lending arrangement and its results no less frequently than annually and determine that any investment of Cash Collateral in the Money Market Funds is in the best interests of the shareholders of the Investing Portfolio.

For the Commission, by the Division of Investment Management, under delegated authority.

Margaret H. McFarland,

Deputy Secretary.

[FR Doc. 01–21789 Filed 8–28–01; 8:45 am]

BILLING CODE 8010–01–M

SECURITIES AND EXCHANGE COMMISSION

[Release No. 34–44738; File No. SR–Amex–2001–60]

Self-Regulatory Organizations; Notice of Filing and Immediate Effectiveness of Proposed Rule Change by the American Stock Exchange LLC Suspending the Collection of a Marketing Fee From Specialists and Registered Options Traders

August 22, 2001.

Pursuant to Section 19(b)(1) of the Securities Exchange Act of 1934 (''Act''),[1] and Rule 19b–4 thereunder,[2] notice is hereby given that on August 7, 2001, the American Stock Exchange LLC (''Amex'') filed with the Securities and Exchange Commission (''Commission'') the proposed rule change as described in Items I, II, and III, below, which Items the Amex has prepared. The Commission is publishing this notice to solicit comments on the proposed rule change from interested persons.

I. Self-Regulatory Organization's Statement of the Terms of Substance of the Proposed Rule Change

The Amex proposes to suspend collection of the marketing fee that it currently imposes on equity options transactions of specialists and registered options traders (''ROTs''). The text of the proposed rule change is available at the principal offices of the Amex and at the Commission.

II. Self-Regulatory Organization's Statement of the Purpose of, and Statutory Basis for, the Proposed Rule Change

In its filing with the Commission, the Amex included statements concerning the purpose of and basis for the proposed rule change and discussed any comments it had received. The text of these statements may be examined at the places specified in Item IV below. The Amex has prepared summaries, set forth in Sections A, B, and C below, of the most significant aspects of such statements.

A. Self-Regulatory Organization's Statement of the Purpose of, and Statutory Basis for, the Proposed Rule Change

1. Purpose

The Amex proposes to suspend collection of the marketing fee that it currently imposes on equity options transactions of specialists and ROTs.

In July 2000, the Amex imposed a marketing fee of $0.40 per contract on the transactions of specialists and ROTs in equity options.[3] The Amex collects the fee and allocates the funds to the Amex's specialists, who may then use the funds to pay broker-dealers for orders that they direct to the Amex. The specialists, in their discretion, determine the specific terms governing the orders that qualify for payment and the amount of any payments. The Amex also instituted a rebate program whereby funds collected and unspent are returned to the specialists and ROTs.[4]

The Amex now proposes to suspend collection of the marketing fee for an indeterminate period of time. The Amex would also reserve the right to reinstate the program if it determines to do so. The Amex notes that the funds collected before the suspension of the program would continue to be allocated to the specialists and disbursed pursuant to the specialists' instructions. In addition, the rebate program mentioned above would remain in effect until all unspent money is returned to the specialists and ROTs.

2. Statutory Basis

The Amex believes that the proposed rule change is consistent with Section 6(b) of the Act[5] and furthers the objectives of Section 6(b)(4) of the Act[6] in that it is designed to provide for the equitable allocation of reasonable dues, fees, and other charges among its members and issuers and other persons using its facilitates.

B. Self-Regulatory Organization's Statement on Burden on Competition

The Amex does not believe that the proposed rule change will impose any inappropriate burden on competition.

C. Self-Regulatory Organization's Statement on Comments on the Proposed Rule Change Received From Members, Participants or Others

The Amex neither solicited nor received any written comments with respect to the proposal.

[1] 15 U.S.C. 78s(b)(1).

[2] 17 CFR 240.19b–4.

[3] *See* Securities Exchange Act Release No. 43228 (August 30, 2000), 65 FR 54330 (September 7, 2000) (SR–Amex–2000–38). Trades between ROTs and trades between specialists and ROTs were excluded from the marketing fee.

[4] *See* Securities Exchange Act Release No. 44598 (July 26, 2001), 66 FR 41071 (August 6, 2001) (SR–Amex–2001–38).

[5] 15 U.S.C. 78f(b).

[6] 15 U.S.C. 78f(b)(4).

III. Date of Effectiveness of the Proposed Rule Change and Timing for Commission Action

The Amex has designated the foregoing proposed rule change as a fee change pursuant to Section 19(b)(3)(A)(ii) of the Act [7] and Rule 19b–4(f)(2) thereunder,[8] and therefore the proposal has become effective upon filing with the Commission. At any time within 60 days after the filing of the proposed rule change, the Commission may summarily abrogate the rule change if it appears to the Commission that such action is necessary or appropriate in the public interest, for the protection of investors, or otherwise in furtherance of the purposes of the Act.

IV. Solicitation of Comments

Interested persons are invited to submit written data, views, and arguments concerning the foregoing, including whether the proposed rule change is consistent with the Act. Persons making written submissions should file six copies thereof with the Secretary, Securities and Exchange Commission, 450 Fifth Street, NW, Washington, D.C. 20549–0609. Copies of the submission, all subsequent amendments, all written statements with respect to the proposed rule change that are filed with the Commission, and all written communications relating to the proposed rule change between the Commission and any person, other than those that may be withheld from the public in accordance with the provisions of 5 U.S.C. 552, will be available for inspection and copying in the Commission's Public Reference Room. Copies of such filing will also be available for inspection and copying at the principal office of the Amex. All submissions should refer to File No. SR–Amex–2001–60 and should be submitted by September 19, 2001.

For the Commission, by the Division of Market Regulation, pursuant to delegated authority.[9]

Margaret H. McFarland,

Deputy Secretary.

[FR Doc. 01–21792 Filed 8–28–01; 8:45 am]

BILLING CODE 8010–01–M

[7] 15 U.S.C. 78s(b)(3)(A)(ii).

[8] 17 CFR 240.19b–4(f)(2).

[9] 17 CFR 200.30–3(a)(12).

SECURITIES AND EXCHANGE COMMISSION

[Release No. 34–44741; File No. SR–CBOE–2001–14]

Self Regulatory Organizations; Chicago Board Options Exchange, Inc.; Order Granting Approval to Proposed Rule Change Amending Rules Regarding Jurisdiction Over Former Members and Associated Persons for Failure To Honor an Exchange Arbitration Award

August 23, 2001.

On March 27, 2001, the Chicago Board Options Exchange, Inc. (''CBOE'' or ''Exchange'') filed with the Securities and Exchange Commission (''Commission''), pursuant to Section 19(b)(1) of the Securities Exchange Act of 1934 (''Act'') [1] and Rule 19b–4 thereunder,[2] a proposed rule change to make amendments to its disciplinary and arbitration rules to extend the CBOE's disciplinary jurisdiction to cover former members and associated persons subject to CBOE arbitration awards. In particular, the proposed rule change provides that the failure to honor a CBOE arbitration award by a former CBOE member or associated person would subject former member or associated person to the disciplinary jurisdiction of the Exchange regardless of the date of termination of membership.

The proposed rule change was published for comment in the **Federal Register** on June 18, 2001.[3] The Commission received no comments on the proposal.

The Commission finds that the proposed rule change is consistent with the requirements of the Act and the rules and regulations thereunder applicable to a national securities exchange [4] and, in particular, the requirements of Section 6 of the Act [5] and the rules and regulations thereunder. The Commission finds specifically that the proposed rule change is consistent with Sections 6(b)(1) and Section 6(b)(6) of the Act,[6] respectively, in that the proposed rule change satisfies the requirement that: (1) An exchange is so organized and has the capacity to be able to carry out the purposes of Section 6 of the Act and to enforce compliance by its members and persons associated with its members with the provisions of Section 6 of the Act, the rules and regulations thereunder, and the rules of the exchange; and (2) the rules of an exchange provide that its members and persons associated with its members shall be appropriately disciplined for violation of the Act, the rules and regulations thereunder, or the rules of the exchange.

It Is Therefore Ordered, pursuant to Section 19(b)(2) of the Act,[7] that the proposed rule change (File No. SR–CBOE–2001–04) be, and it hereby is, approved.

For the Commission, by the Division of Market Regulation, pursuant to delegated authority.[8]

[FR Doc. 01–21793 Filed 8–28–01; 8:45 am]

BILLING CODE 8010–01–M

[1] 15 U.S.C. 78s(b)(1).

[2] 17 CFR 240.19b–4.

[3] *See* Securities Exchange Act Release No. 44408 (June 11, 2001), 66 FR 32853.

[4] In approving this proposed rule change, the Commission notes that it has considered the proposed rule's impact on efficiency, competition, and capital formation. 15 U.S.C. 78c(f).

[5] 15 U.S.C. 78f.

[6] 15 U.S.C. 78f(b)(1); (b)(6).

[7] 15 U.S.C. 78s(b)(2).

[8] 17 CFR 200.30–3(a)(12).

SECURITIES AND EXCHANGE COMMISSION

[Release No. 34–44739; File No. SR–ISE–00–22]

Self-Regulatory Organizations; International Securities Exchange LLC; Order Approving Proposed Rule Change and Notice of Filing and Order Granting Accelerated Approval of Amendments Nos. 1 and 2 to the Proposed Rule Change Relating to Market Maker Financial Requirements

August 22, 2001.

1. Introduction

On November 28, 2000, the International Securities Exchange LLC (''Exchange'' or ''ISE'') filed with the Securities and Exchange Commission (''Commission''), pursuant to section 19(b)(1) of the Securities Exchange Act of 1934 (''Act'') [1] and Rule 19b–4 thereunder,[2] a proposed rule change to amend and further define the calculations necessary to determine the minimum financial requirements for the Exchange's market makers, and specify certain reporting requirements when a market maker fails to maintain the minimum financial requirements. The proposed rule change was published for comment in the **Federal Register** on February 9, 2001.[3] No comments were received on the proposed rule change. On March 13, 2001, ISE filed

[1] 15 U.S.C. 78s(b)(1).

[2] 17 CFR 240.19b–4.

[3] *See* Securities Exchange Act Release No. 43922 (February 2, 2001), 66 FR 9735.

Amendment No. 1[4] and on August 8, 2001, ISE filed Amendment No. 2 to its proposal.[5] This notice and order approves the proposed rule change, as amended, and solicits comments from interested persons on Amendments Nos. 1 and 2.

II. Description

Exchange Rule 809 sets forth the minimum financial requirements for market makers. Currently, Exchange Rule 809 provides that every PMM maintain a cash or liquid asset position equal to the greater of $5 million or an amount sufficient to assume a position of twenty options contracts of each class in which the PMM is appointed. Exchange Rule 809 similarly provides that every CMM maintain a cash or liquid asset position equal to the greater of $1 million or an amount sufficient to assume a position of ten options contracts in each class of options to which the CMM is appointed.

The Exchange proposes to eliminate the option position component in calculating the minimum equity. With respect to CMMs, the proposed rule change would require CMMs to maintain net liquidating equity of not less than $1 million. With respect to PMMs, the proposed amendment would require PMMs to maintain net liquidating equity of not less than $3.25 million plus $25,000 excess equity for each issue over 10. According to the Exchange, when the Exchange phases-in trading in 600 options with approximately 60 options trading in each of its 10 groups or ''bins,'' this requirement would equal $4.5 million for PMMs trading in one bin, and $6.0 million for a PMM trading in two bins.[6]

Under the proposed rule change, the Exchange would also replace the phrase ''cash or liquid asset position'' with ''net liquidating equity,'' and define the later term to conform to the Chicago Board Options Exchange's (''CBOE'') rule.[7] The proposed definition of net liquidating equity, which is the sum of positive cash balances and long securities positions less negative cash balances and short securities positions, is the same as the CBOE definition of the term in CBOE Rule 12.3(f)(1)(F).

The Exchange further proposes to adopt notification requirements. A market maker that falls below the equity requirement must immediately notify the Exchange of the deficiency and submit a plan for raising its equity to the appropriate level if the deficiency cannot be rectified immediately. According to the Exchange, this will allow the Exchange to monitor carefully any firm that might be experiencing financial difficulties and to take actions to minimize any potential risk to the Exchange or investors.[8] ISE will review the adequacy of all business plans submitted by a deficient market maker,[9] as well as review a market maker's continued compliance with the provisions of the plan.[10] Finally, in the case of a PMM with a deficient net liquidating equity, the Exchange may determine to appoint an interim PMM to assure fair and orderly markets.[11]

III. Discussion

For the reasons discussed below, the Commission finds that the proposed rule change is consistent with the Act and the rules and regulations thereunder.[12] Specifically, the Commission finds that the proposed rule change is consistent with the requirements of section 6(b)(5) of the Act[13] that the rules of an exchange be designed to promote just and equitable principles of trade, to remove impediments to and perfect the mechanism of a free and open market, and to protect investors and the public interest.

ISE proposes to amend its rule to revise the minimum financial requirements for market makers. Under the proposal, the minimum net liquidating equity for PMMs will be $3.25 million plus $25,000 excess equity for each underlying security upon which appointed options are open for trading in excess of the initial ten underlying securities. The minimum net liquidating equity for CMMs will be $1 million.

The Commission believes that the proposed net liquidating equity requirements are designed to assure that ISE market makers are capable of making liquid and competitive markets. Although the proposal may reduce the minimum financial requirements for PMMs and CMMs, the Commission believes, based on the representations of ISE, that there are sufficient safeguards (in addition to the proposed minimum financial requirements) to assure that ISE's PMMs and CMMs are adequately capitalized. In this regard, the ISE has represented that it will separately monitor market makers to determine whether a market maker has fallen below the minimum net liquidating equity required by ISE Rule 809 and will notify the market maker if the market maker has failed to notify the Exchange of its deficiency.[14] If the deficiency cannot be rectified immediately, the market maker must submit within five business days, a business plan for raising its equity to the appropriate level. ISE will review all business plans submitted by a deficient market maker,[15] as well as review a market maker's continued compliance with the provisions of the plan.[16] If the Exchange determines that summary suspension is necessary under ISE Rule 1500, given the facts and circumstances, it will appoint an interim PMM to

[4] In Amendment No. 1, the Exchange clarified that it would be reviewing the adequacy of any business plans submitted under the proposed rule change, as well as clarified why it is unnecessary for ISE to appoint interim competitive market makers (''CMMs''). *See* letter from Michael Simon, Senior Vice President and General Counsel, ISE, to Kathy England, Assistant Director, Division of Market Regulation (''Division''), Commission, dated March 12, 2001 (''Amendment No. 1'').

[5] In Amendment No. 2, the Exchange deleted supplemental materials .02 and .03 to ISE Rule 809, which required, in part, that a member (1) notify the Exchange when it equity falls below the minimum requirement, and (2) submit a business plan for raising its equity to comply with ISE Rule 809, as well as allowed the Exchange to appoint an interim Primary Market Maker (''PMM''). In lieu of the supplemental materials, the Exchange submitted a draft Regulatory Information Circular specifying the foregoing requirements in greater detail. ISE has represented that it will submit any changes to the Regulatory Information Circular to the Commission pursuant to Rule 19b–4, 17 CFR 240.19b–4. *See* letter from Michael Simon, Senior Vice President and General Counsel, ISE, to Nancy Sanow, Assistant Director, Division, Commission, dated August 7, 2001 (''Amendment No. 2''). The Exchange also clarified that if the Exchange appoints an interim PMM, ISE will appoint the interim PMM in accordance with ISE Rule 802. An interim PMM will have the same responsibilities and obligations as a regular PMM. Telephone conversation between Jennifer M. Lamie, Assistant General Counsel, ISE, and Terri L. Evans, Special Counsel, Division, Commission, on August 15, 2001.

[6] Pursuant to Exchange Rule 317(a), a member cannot be approved to trade in more than two bins as a PMM.

[7] *See* CBOE Rule 8.86, which states that ''[e]ach DPM shall maintain (i) net liquidating equity in its DPM account of not less than $100,000, and in conformity with such guidelines as the MTS Committee may establish from time to time.* * *''

[8] ISE has represented that it also will separately monitor a market maker's net liquidating equity and notify a market maker if its net liquidating equity falls below the minimum level required by ISE Rule 809. Telephone conversation between Jennifer M. Lamie, Assistant General Counsel, ISE, and Terri L. Evans, Special Counsel, Division, Commission, on August 15, 2001.

[9] *See* Amendment No. 1, *supra* note 4.

[10] Telephone conversation between Jennifer M. Lamie, Assistant General Counsel, ISE, and Terri L. Evans, Special Counsel, Division, Commission, on August 15, 2001.

[11] *See* Amendment No. 2, *supra* note 5.

[12] In approving this rule, the Commission has considered its impact on efficiency, competition, and capital formation. 15 U.S.C. 78c(f).

[13] 15 U.S.C. 78f(b)(5).

[14] *See* Amendment No. 2, *supra* note 5, and telephone conversation between Jennifer M. Lamie and Terri L. Evans, *supra* note 8.

[15] *See* Amendment No. 1, *supra* note 4.

[16] Telephone conversation between Jennifer M. Lamie, Assistant General Counsel, ISE, and Terri L. Evans, Special Counsel, Division Commission, on August 15, 2001.

assure that fair and orderly markets are continued in the PMM's assigned options.[17]

The Commission also believes that the proposed financial requirements are comparable to the financial requirements at other options exchanges. For example, generally, on the American Stock Exchange (''Amex''), the financial requirement for options specialists is equal to a minimum of $600,000, plus $25,000 for each option issue in excess of the initial ten issues in which such specialist is registered,[18] while on CBOE, a designated primary market maker (''DPM'') must maintain, in part, net liquidating equity in its DPM account of not less than $100,000, as well as conform to guidelines established by the MTS Committee, which require $350,000 plus $25,000 in excess equity for each class or product allocated in excess of the initial eight products.[19] On the Pacific Exchange (''PCX''), lead market makers that perform the function of an Order Book Official (''OBO'') must maintain, in part, a cash or liquid asset position of at least $500,000 plus $25,000 for each issue over five issues for which they perform the function of an OBO,[20] while LMMs that do not perform the function of an OBO must maintain a cash or liquid asset position of at least $350,000 plus $25,000 for each issue over eight issues that has been allocated to the LMM.[21] Finally, on the Philadelphia Stock Exchange (''Phlx'') members that are exempt from Rule 15c3–1 must generally maintain net liquid assets of $25,000.[22] Phlx also has specific provisions applicable to FLEX and foreign currency options ROTs. For example, a specialist in FLEX index options must maintain a minimum of $1 million in net capital and an assigned ROT in foreign currency options must maintain a minimum $1 million in net liquid assets.[23] Accordingly, the Commission believes that the proposal will help ISE market makers compete effectively with specialists at other exchanges. Increased competition, in turn, should benefit investors by producing a more efficient marketplace.

The Commission finds good cause for accelerating approval of Amendments Nos. 1 and 2 to the proposed rule change prior to the thirtieth day after the date of publication in the **Federal Register**. The Commission finds that Amendments Nos. 1 and 2 clarify ISE's proposal by providing additional information and representations regarding the operation of the proposed rule and guidance to be provided to members. Accordingly, the Commission believes that granting accelerated approval of Amendments Nos. 1 and 2 is appropriate and consistent with sections 6(b)(5) and 19(b)(2) of the Act.[24] in that it should promote just and equitable principles of trade and, in general, protect investors and the public interest.

IV. Solicitation of Comments

Interested persons are invited to submit written data, views and arguments concerning Amendment Nos. I and 2, including whether the Amendments are consistent with the Act. Persons making written submissions should file six copies thereof with the Secretary, Securities and Exchange Commission, 450 Fifth Street, NW., Washington, D.C. 20549–0609. Copies of the submission, all subsequent amendments, all written statements with respect to the proposed rule change that are filed with the Commission, and all written communications relating to the proposed rule change between the Commission and any person, other than those that may be withheld from the public in accordance with the provisions of 5 U.S.C. 552, will be available for inspection and copying in the Commission's Public Reference Room. Copies of such filing will also be available for inspection and copying at the principal office of the above-referenced self-regulatory organization. All submissions should refer to File No. SR–ISE–00–22 and should be submitted by September 19, 2001.

V. Conclusion

It is therefore ordered, pursuant to section 19(b)(2) of the Act,[25] that the proposed rule change (SR–NYSE–00–22), as amended, is approved.

For the Commission, by the Division of Market Regulation, pursuant to delegated authority.[26]

Margaret H. McFarland,

Deputy Secretary.

[FR Doc. 01–21739 Filed 8–28–01; 8:45 am]

BILLING CODE 8010–01–M

[17] *See supra* note 5.

[18] *See* Amex Rule 950(h).

[19] *See* CBOE Rule 8.86 and CBOE DPM Equity Guidelines 00–111.

[20] *See* PCX Rule 6.82 Commentary .03.

[21] *See* PCX Rule 6.82(c)(11).

[22] *See* Phlx Rule 703.

[23] *See* Phlx Rule 1079(c)(2) and Phlx Rule 1069(d), respectively.

[24] 15 U.S.C. 78f(b)(5) and 78s(b)(2).

[25] 15 U.S.C. 78s(b)(2).

[26] 17 CFR 200.30–3(a)(12).

SECURITIES AND EXCHANGE COMMISSION

[Release No. 34–44736; File No. SR–NSCC–2001–07]

Self-Regulatory Organizations; National Securities Clearing Corporation; Notice of Filing of Proposed Rule Change Relating to Buy-In Rules and Procedures

August 22, 2001.

Pursuant to Section 19(b)(1) of the Securities Exchange Act of 1934 (''Act''),[1] notice is hereby given that on April 27, 2001, the National Securities Clearing Corporation (''NSCC'') filed with the Securities and Exchange Commission (''Commission'') and on April 30, 2001, amended the proposed rule change as described in Items I, II, and III below, which items have been prepared primarily by NSCC. The Commission is publishing this notice to solicit comments on the proposed rule change from interested parties.

I. Self-Regulatory Organization's Statement of the Terms of Substance of the Proposed Rule Change

The proposed rule change (i) further automates the buy-in process of CNS positions, (ii) allows for a Notice of Intention to Buy-In (''Buy-In Notice'') to be filed on successive days provided that the quantity of securities representing the sum of the Buy-In Notices does not exceed the member's total long position, and (iii) revises Retransmittal Notices to include the identity of the member with the long position (''originator'').

II. Self-Regulatory Organization's Statement of the Purpose of, and Statutory Basis for, the Proposed Rule Change

In its filing with the Commission, NSCC included statements concerning the purpose of and basis for the proposed rule change and discussed any comments it received on the proposed rule change. The text of these statements may be examined at the places specified in Item IV below. NSCC has prepared summaries, set forth in sections (A), (B), and (C) below, of the most significant aspects of these statements.[2]

(A) Self-Regulatory Organization's Statement of the Purpose of, and Statutory Basis for, the Proposed Rule Change

NSCC is modifying its buy-in rules and procedures to further automate and

[1] 15 U.S.C. 78s(b)(1).

[2] The Commission has modified the text of the summaries prepared by NSCC.

improve the processing of buy-ins of CNS positions.[3] The proposed procedures provide that a Buy-In Notice may be filed by an originator on successive days provided the succeeding Buy-In Notice does not specify a quantity of securities covered by the prior Buy-In Notice and the quantity of securities representing the sum of all Buy-In Notices does not exceed the member's total long position.[4]

The Retransmittal Notice would be revised to include the identity of the originator on the Retransmittal Notice so that the member owing securities can contact the originator to arrange delivery.[5] Regardless of any agreements that may have been entered into between a member owing securities and an originator, unless the originator notifies NSCC in a timely manner that its Buy-In Order should not be executed, members who receive Retransmittal Notices and do not satisfy them assume liability for the loss, if any, which occurs as a result of an originator's Buy-In Order.[6]

The proposed rule change also would require members to electronically transmit Buy-In Notices and Buy-In Orders through an automated format determined by NSCC thereby eliminating the practice of hand and facsimile deliveries. Similarly, NSCC proposes to transmit through an automated format Retransmittal Notices to members.[7]

NSCC has determined that subject to SEC approval it will target implementation of the proposed Buy-In changes for the third quarter of 2001. Members will be advised of the specific date prior to implementation.[8]

NSCC believes that the proposed rule change is consistent with the requirements of Section 17A of the Act[9] and the rules and regulations thereunder applicable to NSCC because it will facilitate the prompt and accurate clearance and settlement of buy-in transactions by automating and improving the processing of buy-ins.

(B) Self-Regulatory Organization's Statement on Burden on Competition

NSCC does not believe that the proposed rule change will have an impact on or impose a burden on competition.

(C) Self-Regulatory Organization's Statement on Comments on the Proposed Rule Change Received From Members, Participants or Others

No written comments relating to the proposed rule change have been solicited or received.[10] NSCC will notify the Commission of any written comments received by NSCC.

III. Date of Effectiveness of the Proposed Rule Change and Timing for Commission Action

Within thirty-five days of the date of publication of this notice in the **Federal Register** or within such longer period (i) as the Commission may designate up to ninety days of such date if it finds such longer period to be appropriate and publishes its reasons for so finding or (ii) as to which the self-regulatory organization consents, the Commission will:

(A) By order approve such proposed rule change or

(B) Institute proceedings to determine whether the proposed rule change should be disapproved.

IV. Solicitation of Comments

Interested persons are invited to submit written data, views, and arguments concerning the foregoing, including whether the proposed rule change is consistent with the Act. Persons making written submissions should file six copies thereof with the Secretary, Securities and Exchange Commission, 450 Fifth Street, N.W., Washington, D.C. 20459–0609. Copies of the submission, all subsequent amendments, all written statements with respect to the proposed rule change that are filed with the Commission, and all written communications relating to the proposed rule change between the Commission and any person, other than those that may be withheld from the public in accordance with the provisions of 5 U.S.C. 552, will be available for inspection and copying in the Commission's Public Reference Section, 450 Fifth Street, NW., Washington, DC 20549. Copies of such filing also will be available for inspection and copying at the principal office of NSCC. All submissions should refer to File No. SR–NSCC–2001–07 and should be submitted by September 19, 2001.

For the Commission by the Division of Market Regulation, pursuant to delegated authority.[11]

Margaret H. McFarland,

Deputy Secretary.

[FR Doc. 01–21790 Filed 8–28–01; 8:45 am]

BILLING CODE 8010–01–M

[3] Proposed changes to NSCC Rule 11, Sections 7(b) and (c); NSCC Procedure VII, Section J; and NSCC Procedure X, Section A. Also, proposed changes to NSCC Procedure VII, Section E3 to conform its language to the language proposed in NSCC Procedure VII, Section J.

[4] Proposed changes to NSCC Procedure VII, Section J.

[5] Proposed changes to NSCC Rule 11, Section 7(b).

[6] Proposed changes to NSCC Procedure X, Section A 1.

[7] Proposed changes to NSCC Rule 11, Sections 7(b) and (c).

[8] As originally filed, the proposed Buy-In changes were to be implemented by NSCC on June 8, 2001.

[9] 15 U.S.C. 78q–1.

[10] In 1998 the Securities Operations Division of the Securities Industry Association formed a committee that studied, worked with, and supported NSCC in its enhancement of the its buy-in rules and procedures.

[11] 17 CFR 200.30–3(a)(12).

SECURITIES AND EXCHANGE COMMISSION

[Release No. 34–44733; File No. SR–Phlx–99–52]

Self-Regulatory Organizations; Notice of Filing of Proposed Rule Change and Amendment No. 1 Thereto by the Philadelphia Stock Exchange, Inc. Adopting Rule 51, Enforcement of Capital Funding Fee

August 22, 2001.

Pursuant to Section 19(b)(1) of the Securities Exchange Act of 1934 (''Act''),[1] and Rule 19b-4 thereunder,[2] notice is hereby given that on December 6, 1999, the Philadelphia Stock Exchange, Inc. (''Phlx'' or ''Exchange'') filed with the Securities and Exchange Commission (''SEC'' or ''Commission'') the proposed rule change as described in Items I, II, and III, below, which Items have been prepared by the Exchange. The Phlx filed an amendment to the proposal on August 9, 2001.[3] The Commission is publishing this notice to solicit comments on the proposed rule change from interested persons.

1. Self-Regulatory Organization's Statement of the Terms of Substance of the Proposed Rule Change

A. The Rule Language

The Phlx proposes to adopt new Rule 51, enforcement of Capital Funding Fee, which relates to the ability of the Exchange to take certain specified

[1] 15 U.S.C. 78s(b)(1).

[2] 17 CFR 240.19b-4.

[3] *See* Letter from Cynthia Hoekstra, Counsel, Phlx, to Nancy Sanow, Assistant Director, dated August 8, 2001 (''Amendment No. 1''). In Amendment No. 1 the Phlx represented that the proposed Rule 51 complies with Delaware corporate law, Pennsylvania contract law, and the Exchange's Certificate of Incorporation, by-laws, and rules. In addition, the Phlx modified the timing of the enforcement procedures for failure to pay the capital funding fee and included a provision for equitable reversion.

measures if an owner of a membership [4] fails to pay (of have paid on its behalf) any capital funding fee imposed by the Exchange when due. [5] New language in italics.

Rule 51. Enforcement of Capital Funding Fee.

Notice and Late Charges

(a) The Exchange shall issue invoices to each owner (for purposes of this Rule, an ''Obligor'') providing notice of the obligation to pay the capital funding fee within twenty days from the invoice date. If an Obligor fails to pay the Exchange the capital funding fee by the due date, the Exchange shall provide a written Late Notice of such failure (the ''Late Notice'') and, subject to subsection (b), impose a late charge at a monthly rate of 1 percent (simple interest) for each thirty-day period or fraction thereof, calculated on a daily basis, commencing with the twenty-first day.

Waiver of Late Charges

(b) The Finance Committee or its Designee may waive the amount of the late charge, or a portion thereof, if good cause is shown.

For purposes of this Rule, any determination of ''good cause'' shall be based upon the following factors: consideration of the lateness of the payment, the frequency of the late payments by a particular Obligor, the reason for the late payment, the amount outstanding, the existence and reasonableness of a payment plan proposed by the Obligor, and the financial hardship that the remedy would cause the Obligor.

Suspension of Obligor and Rights of Lessee

(c) If an Obligor fails to pay any portion of the capital funding fee, including the late charge described in subsection (a) above, within 30 days after the date of the Late Notice, the Board of Governors (or, if authorized by the Board, a committee of the Board, the Chairman of the Board, or a Designee of the Board) (collectively, ''the Board or its Designee''), shall suspend the right to trade or otherwise conduct business at the exchange, and suspend the Obligor's right to lease the relevant membership, subject to the ability of the current lessee to continue leasing to the extent provided in this paragraph and paragraph (d), below.

The Exchange shall provide the lessee with notice of the provisions contained in subparagraphs (c)(i) and (c)(ii) and paragraph (d) below, at the same time it provides the Obligor with the Late Notice.

Within 25 days after the date of the Late Notice, the Obligor may request in writing that the Board or its Designee postpone suspending the Obligor's rights, and the Board or its Designee postpone these remedies, with or without qualification, if it decides that good cause has been shown by the Oligor. The Obligor's rights shall not be deemed suspended pending consideration by the Exchange of the request.

The Exchange shall provide the Obligor with notice that the Board or its Designee shall take any of the above-referenced action at the same time as it provides the Obligor with the Late Notice.

Lessee Elects to Pay Capital Funding Fee

(i) For a period of up to three months from the date that the Obligor is suspended from the right to lease, the lessee may pay the capital funding fee plus any applicable late charges owed the Exchange by the Obligor in respect to that membership, and set off such amounts from the amounts due the Obligor in accordance with Rule 930(k).

The lessee's authority to pay the capital funding fee pursuant to this Rule is without prejudice to any right of the Obligor or lessee to terminate the lease agreement for other reasons pursuant to its terms or Rule 930(e). Absent such termination, the existing lease agreement shall remain in effect for the months for which the capital funding fee charges are paid by the lessee pursuant to this subsection and shall then terminate unless the delinquency has been cured.

Lessee Does Not Elect to Pay Capital Funding Fee

(ii) If the lessee does not elect to pay the capital funding fee, plus any applicable late charges, the lease agreement shall terminate 30 days from the date of the Late Notice (absent earlier termination by the Obligor or lessee), notwithstanding the provisions in Rule 930(b) and (e) unless the delinquency has been fully cured. The lessee shall remit the amount of the capital funding fee plus late charges to the Exchange, up to the amount of his or her outstanding lease payment(s) due during this 30 day period, and set off such amount from the lease payment(s).

Temporary Trading Privileges

(d) The lessee may apply in writing to the Exchange no later than 10 days prior to the termination of the lease agreement pursuant to subparagraphs (c)(i) or (ii) above to continue trading under temporary trading privileges for a period of up to three months from the Obligor's suspension. The Exchange shall approve or disapprove a properly submitted application within 10 days of receiving the written application unless such approval violates Exchange rules or By-Laws or its Certificate of Incorporation.

(i) If a lease agreement terminates while an application for temporary trading privileges is pending, the lessee may trade as though approval has been granted, but for no more than ten days after the Exchange received the application, pending the approval or disapproval by the Exchange of the application.

(ii) The economic terms of the temporary trading privileges shall be at the current prevailing rate for lease agreements on the Exchange (as determined by the Board or its Designee). A lessee trading under temporary trading privileges continues the rights of a member, including the right to vote (if applicable) and the duty to continue paying to the Exchange any fees or dues otherwise applicable. While trading privileges are extended to the lessee, the Obligor shall be unable to lease the relevant membership.

(iii) The lessee, while trading under temporary privileges, shall be subject to the obligations and entitled to the rights of a member, but shall not be entitled to any rights of an owner of a membership with respect to that membership.

Reversion of Equitable Title

(e) If any portion of the capital funding fee in respect of a membership, including the late charge, is not paid (or payment of the late charge has not been waived or the obligation to pay has not been suspended as provided herein), within 30 days after the date of the Late Notice, the Obligor shall be notified by certified mail that the Board of its Designee shall authorize the reversion of equitable title for such membership to the Exchange, followed by sale of the equitable title for such membership by the Exchange, or any other action it

[4] The term ''owner'' is defined as any person who or which is a holder of equitable title to a membership in the Exchange. *See* Exchange Certificate of Incorporation, Article Twentieth.

[5] On January 5, 2000, the Commission approved as a three-month pilot program, a capital funding fee applicable to owners of memberships. *See* Securities Exchange Act Release No. 42318 (January 5, 2000), 65 FR 2216 (January 13, 2000) (SR–Phlx–99–49). On April 24, 2000, the Commission approved the extension of the three-month pilot program until July 6, 2000. *See* Securities Exchange Act Release No. 42714 (April 24, 2000), 65 FR 25782 (May 3, 2000) (SR–Phlx–00–29). Permanent approval of the capital funding fee was received on June 29, 2000. *See* Securities Exchange Act Release No. 42993 (June 29, 2000), 65 FR 42415 (July 10, 2000) (SR–Phlx–99–51).

deems appropriate if the capital funding fee, including any applicable late charges, are not received by the Exchange within 90 days after the date of the original invoice or such longer period for which a lease agreement is in effect as a result of the election by a lessee to continue paying the capital funding fee as described in (c)(i) above.

(i) The Obligor may request in writing at least 10 days before the 90 day deadline identified above in subparagraph (e) that the Board or its Designee suspend these remedies or impose an alternate remedy proposed by the Obligor, and the Board or its Designee may do so if it decides that good cause is shown by the Obligor.

(ii) If the Obligor has timely submitted a request for suspension of the sale of the Obligor's equitable title or for imposition of an alternate remedy, the Exchange shall not take steps to sell the Obligor's equitable title until the Board or its Designee decides the request in accordance with the guidelines for demonstrating good cause and provides written notice to the Obligor of its decision.

(f) Any excess monies realized by the Exchange from the sale of the delinquent membership over all amounts owed to the Exchange and to others in accordance with the provisions provided in Exchange By-Law Article XV, Section 15–3 and, in the case of a membership that was subject to a lease, to the lessee (if the payments made by the lessee on behalf of the Obligor as described in paragraph (i) exceeded the monthly lease payment amounts), shall be paid to the Obligor.

Miscellaneous

(g) For purposes of this Rule, any notices, applications, or requests to the Exchange or Board or its Designee by the Obligor or lessee must be received in writing by the Secretary of the Exchange during regular business hours.

(h) The provisions and penalties authorized by this Rule shall be in addition to any other penalties, fines or other charges that may be assumed pursuant to Rule 50, the Exchange's By-Laws or otherwise.

B. Discussion of Authority

1. *Authority Under Delaware Law*

The Exchange states that as a non-stock corporation organized under the Delaware General Corporation Law (''DGCL''), it has the authority to adopt proposed rule 51. The exchange states that Article Twentieth of its Certificate of Incorporation expressly empowers the Board of the Exchange to determine and assess penalties for nonpayment of fees, including cancellation of a membership and forfeiture of all rights as an owner, lessor, lessee or member. Article Twentieth provides:

Twentieth: In addition to all other powers granted to the Board of Governors by law, this Certificate of Incorporation or otherwise, the Board of Governors shall have the power (i) to assess such fees, dues and other charges upon members, member organizations, owners (as defined below), lessors and lessees of memberships and holders of permits (or any of them) as the Board of Governors may from time to time adopt by resolution or set forth in the Rules of the Board of Governors, and (ii) to assess penalties for failure to pay any fees, dues or other charges owed to the Corporation, including, without limitation, cancellation of a membership or permit (which membership or permit may be reissued) and forfeiture of all rights as a member, member organization, owner (as defined below), lessor, lessee or holder of a permit. The Board of Governors may authorize any committee thereof or the Chairman of the Board of Governors to exercise any powers of the Board of Governors with respect to the assessment of fees, dues, other charges and penalties. The fees, dues, other charges and penalties authorized in accordance with this Article shall be in addition to any fees, dues, other charges or penalties imposed pursuant to any provision of the By-Laws of the Corporation. For purposes of this Certificate of Incorporation and (unless otherwise expressly stated therein) the rules of the Corporation and any schedule of fees, dues, other charges or penalties which the Corporation may establish, the term ''owner'' (whether or not capitalized) shall mean any person or entity who or which is a holder of equitable title to a membership in the Exchange.[6]

In addition, the Exchange represents that Section 141(j) of the DGCL empowers the Board to direct the business and affairs of the Exchange, and the Exchange's by-laws give the Board broad power to adopt rules of the Exchange. 8 *Del. C.* § 141(j);[7] By-Law Art. IV, § 4–4.

The Exchange states that numerous provisions of the Exchange's by-laws and rules already address matters similar to those addressed by proposed Rule 51.[8] Moreover, the Exchange states that its by-laws require lessors and lessees (as members) to pledge to abide by the rules as they may be amended from time to time.[9]

Accordingly, under the DGCL and the Exchange's Certificate of Incorporation, by-laws and rules, the Board of Governors of the Exchange has the authority to adopt Rule 51.

2. Permissibility Under Pennsylvania Contract Law

The Exchange contends that proposed Rule 51, relating to the suspension of a lessor's right to lease, termination of lease agreements, issuance of temporary trading privileges, and collection of fees from members and set off as described in Rule 930(k),[10] is also permissible as a matter of Pennsylvania contract law for two primary reasons. First, the Exchange states that it may adopt by-laws, rules, or regulations that affect lessors and members pursuant to the express terms of its contractual relationships with the lessors and members and thus any interference with or alteration of extant lease agreements by proposed Rule 51 would be contractually permissible. Second, the Exchange states that it is a third party beneficiary of the lease agreements, and this status provides an additional contractual basis for the collection and set off provisions of proposed Rule 51. (The Exchange states that future lease agreements would of course be deemed

[6] *See* Securities Exchange Act Release No. 42773 (May 11, 2000), 65 FR 31622 (May 18, 2000) (SR–Phlx–00–30).

[7] *See also* 8 *Del. C.* § 121(a) (providing that in addition to powers expressly granted by law or the Certificate of Incorporation, the corporation and its directors may exercise ''any powers incidental thereto, so far as such powers and privileges are necessary or convenient to the conduct, promotion or attainment of the business or purposes set forth in its certificate of incorporation''); Certificate of Incorporation Article Third (stating, in part, that the Exchange may operate as and perform all functions of a national securities exchange and engage in any lawful act or activity for which corporations may be organized under the DGCL).

[8] *See, e.g.,* By-Law Art. XIV § 14–5 (providing that membership may be ''disposed of'' by Admissions Committee in certain circumstances for nonpayment of dues or fines); By-Law Art. XIV, § 14–2 (authorizing Board to fix and impose charges upon members and member organizations); Rule 50 (authorizing suspension of members or member organizations for nonpayment of charges); By-Law Art. XV, § 15–1(a) (providing that a membership may be leased in accordance with such rules as the Board may adopt); Rule 930 (setting forth required terms of a lease agreement and providing, among other things, that the Exchange may dispose of a membership subject to a lease agreement); Rule 960.1 (providing that all members, member organizations, and any persons associated with any member are subject to expulsion, suspension, termination as to activities at the Exchange or any other fitting sanction for violation of the Rules of the Exchange).

[9] *See* By-Law Art. XII, § 12–9. As a condition of the right to lease their seats, lessors agree ''to abide by the [Exchange's] By-Laws as they have or shall be from time to time amended, and by all rules and regulations adopted pursuant to the By-Laws.'' Lessees, as members, likewise make the same commitment.

[10] *See* Securities Exchange Act Release No. 443865 (June 4, 2001), 66 FR 30971 (June 8, 2001) (approving SR–Phlx–2001–45).

to incorporate the terms of Rule 930(k) within them, obviating any contract law question.)

a. Lease Terms Incorporate Relevant Terms of Exchange Articles of Incorporation, By-Laws, and Rules

The Exchange represents that, under the terms and conditions pursuant to which the Exchange awards the privileges of membership and approves the right of an owner to lease a seat, it reserves the right to adopt authorized by-laws, rules, or regulations that affect those lessors and lessees, and, accordingly, any potential impact on lease agreements of Rule 51 would be contractually permissible.[11] The Exchange states that both lessors and lessees (as members) agree respectively as a condition of approval of the right to lease seats and as a condition of approval for membership that the Exchange may effectuate changes to their lease agreements. The Exchange represents that, as a condition of the right to lease their seats, lessors agree ''to abide by the [Exchange's] By-Laws as they have or shall be from time to time amended, and by all rules and regulations adopted pursuant to the By-Laws.'' *See* By-Law Art. XII, § 12–9(b). Lessees (as members) likewise make the same commitment. *See id.* at 12–9(a). It argues that, by agreeing to abide by future by-laws, rules, and regulations, lessors and lessees necessarily grant permission to the Exchange to adopt rules pursuant to which their lease agreements may be affected.[12] Accordingly, it argues that Rule 51, which would provide in express form the authorization for the alteration of or interference with lease agreements, would simply authorize that which is countenanced by the terms of the Exchange's existing relationships with lessors and lessees, and is thereby permissible as a matter of Pennsylvania contract law.

b. The Exchange Is a Third Party Beneficiary of All Lease Agreements

Moreover, the Exchange states that it is already, as a matter of Pennsylvania law, a third party beneficiary of lease agreements and would as such be entitled to provide for collection of Exchange fees from a lessee upon the default of a lessor, and to permit set-off by the lessee. The Exchange states that Pennsylvania law provides that as a third party beneficiary the Exchange is entitled to enforce, in its own name, as a real party in interest, the rights that accrue to it under the lease agreement. Generally, a non-party to a contract is a third party beneficiary either (i) when the parties to contract express an intention in the contract itself to benefit the third party, or (ii) if the surrounding circumstances are sufficiently compelling that recognition of the beneficiary's right is appropriate to effectuate the intention of the parties, and the performance satisfies an obligation of the parties to pay money to the beneficiary or the circumstances indicate that the parties intend to give the beneficiary the benefit of the promised performance.

Here, the Exchange argues that it is a third party beneficiary of lease agreements in accordance with the intention expressed in the lease agreements themselves. It states that Rule 930(c) already provides that the lease agreement ''shall require a lessee to pay the Corporation [the Exchange] * * * all applicable dues, fees, charges, and other debts arising from the use of membership.'' The Exchange represents that, as the purpose of the lease agreement is to permit the lessee the ''use of membership,'' proposed Rule 930(k) simply specifies the circumstances in which the Exchange, rather than requiring payment by the lessee of one such fee, is imposing the lesser obligation of allowing the payment by a lessee. The Exchange also states that likewise, many of the other mandatory terms of the lease agreements, imposed by Exchange rule, also manifest the parties' clear intent to make the Exchange a beneficiary. *See* Rule 930(a) (the Exchange must approve the transfer of membership); 930(d) (the lessee may not encumber legal title to the membership during the lease agreement); 930(e) (legal title to the membership must be transferred to the lessor in accordance with the Exchange's by-laws upon the expiration of the lease agreement or other such event); and 930(j) (the Exchange may dispose of a membership subject to a lease agreement in accordance with its by-laws and rules).

Moreover, the Exchange represents that, in addition to the intent manifested in the lease agreements, which is itself sufficient to render the Exchange a third party beneficiary, the circumstances surrounding the lease agreements independently compel the same conclusion. As noted, the Exchange states that the lease agreements are pursuant to Exchange rules, replete with references to the Exchange, *see* Rule 930, and reference to a third party in the contract itself is a strong indication that the party is a third party beneficiary. The Exchange also notes that it exercises numerous rights related to the lease agreements. The Exchange states that it approves lessors, as well as lessees. *See* Rule 931 (approval of lessors); and By-Law Art. XV, § 15–1 (approval of lessees). The Exchange represents that it also requires lessors and lessees to abide by the Exchange's by-laws. *See* By-Law Art. XII, §§ 12–9 (a), (b); and Rule 930(j). Indeed, the Exchange states that the purpose of the lease agreement is to permit trading on the Exchange. *See* By-Law Art. XII, § 12–1 (a member conducts business on the Exchange). The Exchange also represents that it reserves the right to approve all transfers of membership pursuant to a lease agreement. Rule 930 (a), (d) and (e). Finally, as noted, the Exchange represents that Rule 930 already requires that lessees be responsible for payment to the Exchange of all applicable dues, fees, charges and other debts, and proposed Rule 51 identifies under what circumstances the lessee may, at his or her option, remit one such fee to the Exchange.[13]

The Exchange argues that it is, accordingly, a third party beneficiary to the lease agreements with the right to allow the provision of payment of fees and set off in proposed Rule 51.

Therefore, the Exchange states that, as a condition of membership and of the right to lease seats, the Exchange's adoption of Rule 51 is a permissible alternation or interference with extant lease agreements, and, as a third party beneficiary, the Exchange's provision for collection and set off in proposed Rule 51 are contractually permissible under Pennsylvania law.

In sum, the Exchange contends that adoption by the Exchange of proposed Rule 51 would be consistent with applicable corporate governance and contract law.

[11] *See* footnote 9, *supra*, for various rules that are lawful in accordance with the conditions of membership and of the right to lease.

[12] We note that the Exchange has also previously explained to the Commission when proposing Article Nineteenth and Rule 930(k) that that Article and Rule are likewise consistent with Pennsylvania contract law for this same reason. *See* Securities Exchange Act Releases Nos. 43987 (February 20, 2001), 66 FR 12582 (February 27, 2001) (SR–Phlx–99–50) and 43865 (June 4, 2001), 66 FR 30971 (June 8, 2001) (SR–Phlx–2001–45).

[13] Indeed, the Exchange may well be a constructive party to the lease agreement. While Pennsylvania courts have not had the opportunity to address the issue of constructive parties, there exists persuasive case law elsewhere that when the contracting parties, and a third party have a sufficiently intertwined business relationship, the third party is deemed to be a constructive party to the contract. Here, for the various reasons outlined in the text, the Exchange, lessors, and lessees, possess such an extraordinarily intertwined business relationship that the Exchange could be considered a constructive party to lease agreements. This would provide yet another alternative basis for the legal adequacy of the Exchange's provision for collection and set off in proposed Rule 51.

II. Self-Regulatory Organization's Statement of the Purpose of, and Statutory Basis for, the Proposed Rule Change

In its filing with the Commission, the Phlx included statements concerning the purpose of and basis for the proposed rule change and discussed any comments it received on the proposed rule change. The text of these statements may be examined at the places specified in Item IV below. The Phlx has prepared summaries, set forth in sections A, B, and C below, of the most significant aspects of such statements.

A. Self-Regulatory Organization's Statement of the Purpose of, and Statutory Basis for, the Proposed Rule Change

The Exchange states that the purpose of the proposed rule change is to adopt new Rule 51, which specifies what enforcement action may be taken against an owner for failure to pay any capital funding fee imposed by the Exchange. The Exchange represents that a new rule is required because existing Exchange rules do not comprehensively address situations in which owners, as opposed to members or member organizations, are required to pay the Exchange any fees. In addition, the Exchange states that capital funding fee invoices are sent out separately from other Exchange invoices and are subject to a different payment schedule. Therefore, the Exchange represents that the remedies of late payments that are addressed in current Exchange Rule 50 are not appropriate.[14]

In addition, the Exchange notes that proposed Rule 51 delineates the remedies that shall be taken by the Board if the capital funding fee is not paid. The Exchange notes that the rule allows for a variety of remedies ranging from the imposition of a late fee to reversion and sale by the Exchange of the equitable title to a membership. The Exchange notes that the remedies are set forth in such a way as to apply the less onerous remedies (*i.e.*, like fees) first and the more serious remedies (*i.e.*, suspension of right to trade or lease and reversion of membership) only after the Exchange has not received payment within 90 days after the date of the original time period (or such longer period as necessary if a lease is in effect as a result of the election by a lessee to continue paying the capital funding fee). The Exchange represents that, by allowing this graduated scale of remedies, the owners are put on notice as to what remedies will be imposed if payment is not received in a timely manner, with the more serious remedies being applied after a longer period of time. In addition, the Exchange represents that proposed Rule 51 delineates the Board's responsibilities and authority for handling instances when an owner fails to pay the capital funding fee when due. The Exchange states that the Rule is designed to protect innocent lessees from being unexpectedly dispossessed from their memberships and trading rights in the event of a nonpayment by their lessors. The Exchange represents, that, by electing to pay the capital funding fee on behalf of an owner, the lessee may continue trading under his/her existing membership for up to three months. The Exchange states that, at the end of this period, or in the event that the lessee elects not to pay the fee on behalf of the lessor, the lessee may apply for temporary trading privileges.

The Exchange states that the amount and capital contribution structure of this fee are vastly different from other Exchange fees, as is the purpose. In fact, the Exchange represents that the Board determined that the enforcement mechanisms outlined in proposed Rule 51 were necessary to effectuate the Exchange's capital funding fee, a central aspect of the Exchange's capital plan, for the continued viability and competitiveness of the Exchange.

The Exchange believes that the proposed rule change is consistent with Section 6 of the Act,[15] in general, and with Section 6(b)(5),[16] in particular because it promotes just and equitable principles of trade and protects investors and the public interest by providing an enforcement mechanism which should, in turn, ensure prompt payment of capital funding fees to the Exchange by an owner.

B. Self-Regulatory Organization's Statement on Burden on Competition

The Exchange believes that the proposed rule change will not impose any inappropriate burden on competition.

C. Self-Regulatory Organization's Statement on Comments on the Proposed Rule Change Received From Members, Participants or Others

No written comments were either solicited or received.

III. Date of Effectiveness of the Proposed Rule Change and Timing for Commission Action

Within 35 days of the date of publication of this notice in the **Federal Register** or within such longer period (i) as the Commission may designate up to 90 days of such date if it finds such longer period to be appropriate and publishes its reasons for so finding or (ii) as to which Phlx consents, the Commission will:

A. By order approve such proposed rule change, or

B. Institute proceedings to determine whether the proposed rule change should be disapproved.

IV. Solicitation of Comments

Interested persons are invited to submit written data, views, and arguments concerning the foregoing, including whether the proposed rule change, as amended, is consistent with the Act. Persons making written submissions should file six copies thereof with the Secretary, Securities and Exchange Commission, 450 Fifth Street, NW., Washington, DC 20549–0609. Copies of the submission, all subsequent amendments, all written statements with respect to the proposed rule change that are filed with the Commission, and all written communications relating to the proposed rule change between the Commission and any person, other than those that may be withheld from the public in accordance with the provisions of 5 U.S.C. 552, will be available for inspection and copying in the Commission's Public Reference Room. Copies of such filing will also be available for inspection and copying at the principal office of the Phlx. All submissions should refer to File No. SR–Phlx–99–52 and should be submitted by September 19, 2001.

For the Commission, by the Division of Market Regulation, pursuant to delegated authority.[17]

Margaret H. McFarland,

Deputy Secretary.

[FR Doc. 01–21740 Filed 8–28–01; 8:45 am]

BILLING CODE 8010–01–M

[14] *See* Phlx Rule 50, Late Charge.

[15] 15 U.S.C. 78f(b).

[16] 15 U.S.C. 78f(b)(5).

[17] 17 CFR 200.30–3(a)(12).

SECURITIES AND EXCHANGE COMMISSION

[Release No. 34–44740; File No. SR–Phlx–2001–61]

Self-Regulatory Organizations; Notice of Filing and Immediate Effectiveness of Proposed Rule Change by the Philadelphia Stock Exchange, Inc. Relating to Solicited Orders and Anticipatory Hedging Activity

August 23, 2001.

Pursuant to Section 19(b)(1) of the Securities Exchange Act of 1934 (''Act''),[1] and Rule 19b–4 thereunder,[2] notice is hereby given that on July 10, 2001, the Philadelphia Stock Exchange, Inc. (''Phlx'' or ''Exchange'') filed with the Securities and Exchange Commission (''Commission'') the proposed rule change as described in Items I, II, and III below, which Items have been prepared by the Phlx. On August 7, 2001, the Phlx submitted to the Commission Amendment No. 1 to the proposed rule change.[3] The proposed rule change, as amended, has been filed by the Phlx as a ''non-controversial'' rule change under Rule 19b–4(f)(6) under the Act.[4] The Commission is publishing this notice to solicit comments on the proposed rule change from interested persons.

I. Self-Regulatory Organization's Statement of the Terms of Substance of the Proposed Rule Change

The Phlx proposes to amend Phlx Rule 1064, ''Crossing, Facilitation and Solicited Orders'' by: (1) Amending Phlx Rule 1064(c) to permit a member or member organization representing an order (''originating order'') to solicit another member, member organization, or non-member broker-dealer outside the trading crowd to participate in a transaction with the originating order provided that certain specified procedures are followed; and (2) adopting new Phlx Rule 1064(d) to prohibit a member or person associated with a member from using non-public information regarding crossing, facilitation, and solicited orders for the member's benefit by trading in the underlying stock or in related instruments prior to exposing the order to the trading crowd. The Phlx is also proposing corresponding changes to Options Floor Procedure Advice (''OFPA'') B–11(c) and (d) and a conforming amendment to OFPA C–7.

The text of the proposed rule change is available at the Phlx and at the Commission.

II. Self-Regulatory Organization's Statement of the Purpose of, and Statutory Basis for, the Proposed Rule Change

In its filing with the Commission, the Phlx included statements concerning the purpose of and basis for the proposed rule change and discussed any comments it received on the proposed rule change. The text of these statements may be examined at the places specified in Item IV below. The Exchange has prepared summaries, set forth in sections A, B, and C below, of the most significant aspects of such statements.

A. Self-Regulatory Organization's Statement of the Purpose of, and Statutory Basis for, the Proposed Rule Change

1. Purpose

The purpose of the proposed rule change is to set forth specific procedures and guidelines to be followed respecting solicited orders, and to prohibit the use of non-public information received during the crossing, facilitation, and solicitation processes.

a. *Solicited Orders.* Currently, Phlx Rule 1064(c) provides that, if a member appears in the trading crowd in response to a solicitation, other trading crowd participants must be given a reasonable opportunity to respond to the order which prompted the solicitation before the solicited member may respond to the order. The proposed rule change would add paragraph (c)(ii) to the current rule and to OFPA B–11 to permit a member or member organization representing an originating order to solicit another member, member organization, or non-member broker-dealer outside the trading crowd (''solicited party'') to participate in the transaction on a proprietary basis, provided, however, that the trading crowd is given an opportunity to participate in the transaction by matching or improving the terms of the transaction.

Proposed Phlx Rule 1064(c)(ii) and OFPA B–11(c)(ii) further set forth the procedures to be followed when an Exchange member solicits another member, member organization, or non-member broker-dealer outside the trading crowd. The rule would require the member representing the originating order, upon entering the trading crowd to execute the transaction, to: (a) Announce to the trading crowd the same terms of the originating order that were disclosed to the solicited party; (b) bid at the price he/she is prepared to buy from the solicited party or offer at the price he/she is prepared to sell to the solicited party; and (c) give the trading crowd a reasonable opportunity to accept the bid or offer. If a member in the trading crowd decides to match or improve the terms of the transaction, the proposed rule would grant such member in the trading crowd priority over the solicited party.

In order to ensure full disclosure of such orders, proposed Phlx Rule 1064(c)(iii) and OFPA B–11(c)(iii) would require that the word ''Solicited'' be written clearly and legibly on the order ticket of the solicited order.

The purpose of proposed Phlx Rule 1064(c)(ii) and OFPA B–11(c)(ii) is to allow an Exchange member representing an options order to solicit a third party outside the trading crowd. The member, however, would still have the obligation to represent the originating order to the trading crowd prior to execution.

The purpose of the proposed provision requiring an Exchange member representing a solicited order to announce the terms of the order to the trading crowd prior to executing that order is to ensure that the members of the trading crowd have a reasonable opportunity to participate in the transaction by improving or matching the proposed price.

In addition, this provision would benefit the customer whose order is represented by the soliciting member by allowing for the possible improvement of the ultimate price at which such an order is executed.

The Exchange believes that granting members in the trading crowd priority over the solicited party should ensure that crowd members that wish to participate in such a transaction are given a reasonable opportunity to do so. The Exchange believes that full disclosure to the trading crowd of the terms of orders that comprise solicited transactions allows the trading crowd to give full consideration to, and the opportunity for improvement of, such terms.

b. *Prohibition Against Anticipatory Hedging.* Proposed Phlx Rule 1064(d) and OFPA B–11(d) would expressly prohibit any member or person associated with a member who has knowledge of the material terms and

[1] 15 U.S.C. 78s(b)(1).

[2] 17 CFR 240.19b–4.

[3] *See* letter from Richard S. Rudolph, Counsel, Phlx, to Nancy Sanow, Assistant Director, Division of Market Regulation (''Division''), Commission, dated August 6, 2001. The substance of Amendment No. 1 is incorporated in the description of the proposed rule change in Section II below. For purposes of calculating the 60-day period within which the Commission may summarily abrogate the proposed rule change under Section 19(b)(3)(C) of the Act, 15 U.S.C. 78s(b)(3)(C), the Commission considers that period to commence on August 7, 2001, the date the Phlx filed Amendment No. 1.

[4] 17 CFR 240.19b–4(f)(6).

conditions of a solicited order, an order being facilitated, or orders being crossed, the execution of which are imminent, from entering, based on such knowledge, an order to buy or sell an option for the same underlying security; an order to buy or sell the security underlying such class; or an order to buy or sell any related instrument. The prohibition would remain in effect until the terms of such solicited, facilitated, or crossed order are disclosed to the trading crowd, or until the trade can no longer reasonably be considered imminent in view of the passage of time since the order was received.

In order to allow crowd participants to know what constitutes a ''related instrument'' in reference to an index option, the proposed rule and OFPA clarify that an order to buy or sell a related instrument means, in reference to an index option, an order to buy or sell securities comprising 10% or more of the component securities in the index or an order to buy or sell a futures contract on an economically equivalent index.

The Phlx also proposes new Commentary .01 to Rule 1064 and OFPA B–11, stating that a violation of this rule may be considered conduct inconsistent with just and equitable principles of trade.[5] The purpose of the proposed rule is to expressly prohibit anticipatory hedging that is based on inside information. The Exchange believes that a codified prohibition, and the proposed Commentary stating that a violation of the rule may be considered conduct inconsistent with just and equitable principles of trade, should function as a deterrent against possible manipulative practices based on inside information.[6]

c. *Conforming Amendment to OFPA C–7.* Currently, OFPA C–7, ''Responsibility to Represent Orders to the Trading Crowd,'' requires that, once an option order has been received on the floor, it must be represented to the trading crowd before it may be represented away from the crowd.[7]

Phlx is proposing an amendment to OFPA C–7 to provide that, except as otherwise provided in OFPA B–11(c) and Phlx Rule 1064(c), once an option order has been received on the floor, it must be represented to the trading crowd before it may be represented away from the crowd. This would provide Floor Brokers with the ability to solicit third parties outside the trading crowd before representing the order in the trading crowd.

The purpose of this amendment is to maintain consistency in the Phlx's rules and OFPAs concerning orders represented away from the trading crowd.

2. Statutory Basis

The Phlx believes that the proposed rule change, as amended, is consistent with Section 6 of the Act,[8] in general, and with Section 6(b)(5) of the Act,[9] specifically, in that it is designed to perfect the mechanisms of a free and open market and the national market system, protect investors and the public interest, and promote just and equitable principles of trade by ensuring that crowd participants are given a reasonable opportunity to participate in, and potentially improve the bids and/or offers of, solicited orders, and by specifically prohibiting anticipatory hedging activity based on inside information.

B. Self-Regulatory Organization's Statement on Burden on Competition

Phlx does not believe that the proposed rule change, as amended, will impose any inappropriate burden on competition.

C. Self-Regulatory Organization's Statement on Comments on the Proposed Rule Change Received From Members, Participants or Others

No written comments were solicited or received.

III. Date of Effectiveness of the Proposed Rule Change and Timing for Commission Action

Because the foregoing proposed rule change does not significantly affect the protection of investors or the public interest and does not impose any significant burden on competition and because the Phlx provided the Commission with written notice of its intent to file the proposed rule change at least five business days prior to the filing date, the proposed rule change has become effective pursuant to Section 19(b)(3)(A) of the Act[10] and Rule 19b–4(f)(6)[11] thereunder.

A proposed rule change filed under Rule 19b–4(f)(6) normally does not become operative prior to 30 days after the date of filing.[12] However, Rule 19b–4(f)(6)(iii) permits the Commission to designate a shorter time if such action is consistent with the protection of investors and the public interest.[13] The Phlx has requested that the Commission accelerate the operative date of the proposal so that the Exchange may remain competitive with other exchanges that currently have similar rules in effect. The Commission, consistent with the protection of investors and the public interest, has determined to make the proposed rule change operative as of the date August 23, 2001.[14]

At any time within 60 days of August 7, 2001, the Commission may summarily abrogate such rule change if it appears to the Commission that such action is necessary or appropriate in the public interest, for the protection of investors, or otherwise in furtherance of the purposes of the Act.

IV. Solicitation of Comments

Interested persons are invited to submit written data, views, and arguments concerning the foregoing, including whether the proposed rule change, as amended, is consistent with the Act. Persons making written submissions should file six copies thereof with the Secretary, Securities and Exchange Commission, 450 Fifth Street, N.W., Washington, D.C. 20549–0609. Copies of the submission, all subsequent amendments, all written statements with respect to the proposed rule change, as amended, that are filed with the Commission, and all written communications relating to the proposed rule change, as amended, between the Commission and any person, other than those that may be withheld from the public in accordance with the provisions of 5 U.S.C. 552, will be available for inspection and copying in the Commission's Public Reference Room. Copies of such filing will also be available for inspection and copying at

[5] *See* Phlx Rule 707, stating that a member, member organization, or person associated with or employed by a member or member organization shall not engage in conduct inconsistent with just and equitable principles of trade. Other Phlx rules expressly reference just and equitable principles of trade. *See, e.g.,* Phlx Rules 1015(b), 1042.02 and 1051(a). The Phlx states that the lack of express reference in other Phlx rules should not be construed as waiving the ability to make a violation of Phlx Rule 707 co-exist with any other violation, depending on the facts and circumstances of the case. The Exchange believes that a violation of the existing crossing, facilitation and solicitation provisions of its rules could be a violation of just and equitable principles of trade and could be subject to disciplinary action as such. In addition, the Phlx states a violation of Phlx Rule 1064, OFPA B–11, or OFPA C–7, for instance, can be in and of itself a stand-alone violation.

[6] The Phlx states that depending on the facts and circumstances surrounding individual cases, anticipatory hedging activity may be a violation of other Phlx rules or rules under the Act.

[7] *See* Securities Exchange Act Release No. 24309 (April 7, 1987), 52 FR 11894 (April 13, 1987).

[8] 15 U.S.C. 78f

[9] 15 U.S.C. 78f(b)(5).

[10] 15 U.S.C. 78s(b)(3)(A).

[11] 17 CFR 240.19b–4(f)(6).

[12] *See* 17 CFR 240.19b–4(f)(6)(iii).

[13] *Id.*

[14] For purposes only of accelerating the operative date of this proposal, the Commission has considered the proposed rule's impact on efficiency, competition, and capital formation. 15 U.S.C. 78c(f).

the principal office of the Phlx. All submissions should refer to File No. SR–Phlx–2001–61 and should be submitted by September 19, 2001.

For the Commission, by the Division of Market Regulation, pursuant to delegated authority.[15]

Margaret H. McFarland,

Deputy Secretary.

[FR Doc. 01–21791 Filed 8–28–01; 8:45 am]

BILLING CODE 9010–01–M

DEPARTMENT OF STATE

[Public Notice 3538]

Department of State Performance Review Board Members (At-Large Board)

In accordance with Section 4314(c)(4) of the Civil Service Reform Act of 1978 (Pub. L. 95–454), the Executive Resources Board of the Department of State has appointed the following individuals to the Department of State Performance Review Board (At-Large Board) register:

Samuel M. Witten, Assistant Legal Advisor for Law Enforcement and Intelligence, Office of the Legal Advisor, Department of State

Patrick R. Hayes, Executive Director, Bureau of Western Hemisphere Affairs, Department of State

LeRoy Lowery, III, Senior Inspector, Office of the Inspector General, Department of State

Frank E. Moss, Executive Director, Bureau of Consular Affairs, Department of State

Brenda Saunders Sprague, Director, Office of Language Services, Bureau of Administration, Department of State

Christopher Flaggs, Director, Domestic Financial Service, Bureau of Finance and Management Policy, Department of State

Dated: August 14, 2001.

Alex De La Garza,

Deputy Assistant Secretary, Bureau of Human Resources, Department of State.

[FR Doc. 01–21798 Filed 8–28–01; 8:45 am]

BILLING CODE 4710–15–P

[15] 17 CFR 200.30–3(a)(12).

OFFICE OF THE UNITED STATES TRADE REPRESENTATIVE

Trade Policy Staff Committee (TPSC): Request for Identification of Private Sector Experts In Electronic Commerce Who May Wish To Participate in the Work of the Free Trade Area of the Americas (FTAA) Joint Government-Private Sector Committee of Experts on Electronic Commerce (Joint E-Commerce Committee)

AGENCY: Office of the United States Trade Representative.

ACTION: Request for identification of private sector experts on electronic commerce.

SUMMARY: The TPSC seeks to identify U.S. private sector experts on issues related to electronic commerce who may be interested in participating in the work of the FTAA Joint E-Commerce Committee. Interested members of the public are invited to submit written notice of their interest and their qualifications.

DATES: Written expressions of interest in participating in the work of the Joint Committee should be submitted no later than noon on September 13, 2001.

ADDRESSES: Expressions of interest (original plus 20 copies) should be submitted to Gloria Blue, Executive Secretary, Trade Policy Staff Committee, Office of the U.S. Trade Representative, 1724 F St., Fifth Floor, NW, Washington, D.C., 20508. Attn: FTAA Joint E-Commerce Committee-Private Sector Participation.

FOR FURTHER INFORMATION CONTACT: For procedural questions concerning public comments, contact Gloria Blue, Executive Secretary, Trade Policy Staff Committee, Office of the United States Trade Representative, (202) 395–3475. All other questions concerning the Joint E-Commerce Committee may be directed to Walter Bastian, Acting Deputy Assistant Secretary for the Western Hemisphere, U.S. Department of Commerce (202) 482–4325, Walter_Bastian@ita.doc.gov.

SUPPLEMENTARY INFORMATION:

1. Background

At the Second Summit of the Americas in April 1998, in Santiago, Chile, the 34 democratically-elected Western Hemisphere leaders initiated negotiations to create the FTAA no later than the year 2005. They established nine negotiating groups, a consultative group, and two non-negotiating committees, one of which is the Joint E-Commerce Committee, which began its work in August 1998. The trade ministers mandated that both government and private sector experts meet as the Joint E-Commerce Committee to make recommendations on how to increase and broaden the benefits of electronic commerce; the Joint E-Commerce Committee is not a negotiating group.

During 1998–1999, the Government of Barbados chaired the Joint E-Commerce Committee. During 2000–2001, a Uruguayan private sector representative chaired. The Government of Canada is currently chairing the Committee through October 2002 with a Peruvian private sector representative serving as Vice Chair. Acting Deputy Assistant Secretary of Commerce for the Western Hemisphere, Walter Bastian, is leading the U.S. Government-private sector delegation to the Joint E-Commerce Committee.

Status of Work in the Joint Committee: At each of the past two FTAA Ministerial meetings, in Toronto, Canada in November 1999 and Buenos Aires, Argentina in April 2001, trade ministers received, and released to the public, reports prepared by the Joint E-Commerce Committee reflecting the culmination of its discussions over the preceding 18 months on a broad range of electronic commerce issues. The Joint E-Commerce Committee's recommendations on increasing and broadening the benefits of electronic commerce were drafted with the full participation of government and private sector experts from every region in the Hemisphere. FTAA trade ministers committed to share the report and its recommendations with other relevant authorities within their governments. They also instructed the Joint E-Commerce Committee to continue its work as a non-negotiating group and produce further recommendations over the next 18-month period. The ''Second Report with Recommendations to Ministers April 9, 2001,'' is available in English and Spanish on the USTR website (*www.ustr.gov*), the official FTAA website (*http://www.ftaa-alca.org*) and the U.S. Government Electronic Commerce website (*http://www.ecommerce.gov*).

The Joint E-Commerce Committee met most recently on July 23–24, 2001 in Panama City, Panama. At this meeting, the Joint E-Commerce Committee's government and private sector representatives identified issues to be discussed during the next phase of its work. Over the next year, the Joint E-Commerce Committee will focus on the digital divide (including issues related to access and infrastructure, small and medium sized enterprises, education

and training); consumer protection; and e-government. The Joint E-Commerce Committee will make further recommendations to trade ministers for their consideration at the next FTAA Ministerial meeting in October 2002.

2. Private Sector Participation

During 1998–1999, 13 U.S. private sector representatives, reflecting a balance of interests and electronic commerce issue expertise, participated in the work of the Joint E-Commerce Committee. Nineteen (19) U.S. private sector representatives participated during 2000–2001. All had responded to notices in the **Federal Register** (63 FR 42090, August 6, 1998, 64 FR 26811, May 17, 1999, 65 FR 40, February 29, 2000 and 65 FR 150, August 3, 2000) or to requests to official trade advisors inviting expressions of interest and qualifications to participate in the work of the Joint E-Commerce Committee.

As the Joint E-Commerce Committee focuses on its work for 2001–2002, the TPSC is seeking to solicit interest in new U.S. private sector participation on the Joint E-Commerce Committee. In order to assist the TPSC in identifying U.S. private sector experts on issues related to the Joint E-Commerce Committee's upcoming work, members of the public are invited to submit written notice of their interest and describe their qualifications. Qualifications of interest include: demonstrated expertise in one or more aspects of electronic commerce, such as the digital divide, consumer protection, e-government; knowledge of the Western Hemisphere, including established contacts with foreign private sector interests in the region; an ability and willingness to broadly solicit views from and disseminate information to private sector interests; and familiarity with U.S. and foreign trade and investment policies and obligations and developments in electronic commerce fora.

Written Expression of Interest

Persons wishing to make written expressions of interest should provide the original plus twenty (20) typed copies, to Gloria Blue, Executive Secretary, Trade Policy Staff Committee, Office of the U.S. Trade Representative, 1724 F St., NW, Washington, D.C., 20508, (202) 395–3475, no later than noon, September 6, 2001. If possible, expressions of interest should be submitted before this date.

Business confidential information will be subject to the requirements of 15 CFR 2003.6. Any business confidential material must be clearly marked as such on the cover letter or page and each succeeding page, and must be accompanied by a nonconfidential summary thereof. If the submission contains business confidential information, twenty copies of a public version that does not contain confidential information must be submitted. A justification as to why the information contained in the submission should be treated confidentially must be included in the submission. In addition, any submissions containing business confidential information must be clearly marked ''Confidential'' at the top and bottom of the cover page (or letter) and each succeeding page of the submission. The version that does not contain confidential information should also be clearly marked, at the top and bottom of each page, ''public version'' or ''non-confidential.''

Nonconfidential submissions will be available for public inspection in the USTR Reading Room in the Annex of the Office of the USTR, 1724 F Street, N.W., Room Three, Washington, DC. An appointment to review the file may be made by calling Brenda Webb (202) 395–6186. The Reading Room is open to the public from 10:00 a.m. to 12 noon, and from 1 p.m. to 4 p.m. Monday through Friday.

To be assured of consideration for participation in this round of discussions, expressions of interest should be submitted no later than 12 noon on September 13, 2001.

Carmen Suro-Bredie,

Chair, Trade Policy Staff Committee.

[FR Doc. 01–21735 Filed 8–28–01; 8:45 am]

BILLING CODE 3190–01–P

OFFICE OF THE UNITED STATES TRADE REPRESENTATIVE

[Docket No. WTO/DS–___]

WTO Dispute Settlement Proceeding Regarding the U.S. Department of Commerce Preliminary Countervailing Duty Determination and Preliminary Critical Circumstances Determination Concerning Certain Softwood Lumber From Canada, and Section 777a(e)(2)(A) and (B) of the Tariff Act of 1930

AGENCY: Office of the United States Trade Representative.

ACTION: Notice; request for comments.

SUMMARY: The Office of the United States Trade Representative (USTR) is providing notice that on August 21, 2001, the United States received from Canada a request for consultations under the Marrakesh Agreement Establishing the World Trade Organization (WTO Agreement) regarding the U.S. Department of Commerce (DOC) preliminary countervailing duty determination and preliminary critical circumstances determination concerning certain softwood lumber from Canada, as well as section 777a(e)(2)(A) and (B) of the Tariff Act of 1930 (19 U.S.C. 1677f–1(e)(2)(A) and (B)). Canada alleges that:

- DOC's preliminary countervailing duty determination is inconsistent with Articles 1, 2, 10, 14, 17.1, 17.5, 19.4, and 32.1 of the Agreement on Subsidies and Countervailing Measures (SCM Agreement) and Article VI:3 of the General Agreement on Tariffs and Trade 1994 (GATT 1994);
- DOC's preliminary critical circumstances determination is inconsistent with Articles 17.1, 17.3, 17.4, 19.4, and 20.6 of the SCM Agreement; and
- Section 777A(e)(2)(A) and (B) of the Tariff Act of 1930, 19 CFR §§ 351.214(k) and 351.213(b) and (k), and the operation of these provisions in the DOC countervailing duty investigation of certain softwood lumber products from Canada are inconsistent with U.S. obligations under Article XVI:4 of the WTO Agreement, Article VI:3 of the GATT 1994, and Articles 10, 19.3, 19.4, 21.1, 21.2, 32.1, and 32.5 of the SCM Agreement.

USTR invites written comments from the public concerning the issues raised in this dispute.

DATES: Although USTR will accept any comments received during the course of the dispute settlement proceedings, comments should be submitted on or before September 20, 2001 to be assured of timely consideration by USTR.

ADDRESSES: Submit comments to Sandy McKinzy, Monitoring and Enforcement Unit, Office of the General Counsel, Room 122, Office of the United States Trade Representative, 600 17th Street, N.W., Washington, D.C., 20508, Attn: Softwood Lumber dispute. Telephone: (202) 395–3582.

FOR FURTHER INFORMATION CONTACT: Willis S. Martyn, Associate General Counsel, Office of the United States Trade Representative, 600 17th Street, N.W., Washington, D.C., (202) 395–3582.

SUPPLEMENTARY INFORMATION: Section 127(b) of the Uruguay Round Agreements Act (URAA) (19 U.S.C. 3537(b)(1)) requires that notice and opportunity for comment be provided after the United States submits or receives a request for the establishment of a WTO dispute settlement panel. Consistent with this obligation, but in

an effort to provide additional opportunity for comment, USTR is providing notice that consultations have been requested pursuant to the WTO Dispute Settlement Understanding. If such consultations should fail to resolve the matter and a dispute settlement panel is established pursuant to the DSU, such panel, which would hold its meetings in Geneva, Switzerland, would be expected to issue a report on its findings and recommendations within six to nine months after it is established.

Major Issues Raised by Canada

The notice of the DOC preliminary countervailing duty determination and preliminary critical circumstances determination concerning certain softwood lumber from Canada was published in the **Federal Register** on August 17, 2001. The notice explains the basis for DOC's preliminary determinations that Canada provides countervailable subsidies to the Canadian lumber industry and that critical circumstances exist. The notice further states that DOC will instruct the U.S. Customs Service to suspend liquidation of all entries of certain softwood lumber from Canada that are entered, or withdrawn from warehouse, for consumption on or after May 19, 2001. In addition, importers will be required to post a cash deposit or bond equal to the 19.31 percent ad valorem subsidy rate calculated by DOC for all imports that are entered, or withdrawn from warehouse, for consumption on or after August 17, 2001. In its panel request, Canada describes its claims against DOC's determinations in the following manner:

Regarding the preliminary countervailing duty determination, Canada considers this determination to be inconsistent with U.S. obligations under Articles 1, 2, 10, 14, 17.1, 17.5, 19.4, and 32.1 of the SCM Agreement and Article VI(3) of GATT 1994. Such inconsistencies include the determination's treatment of stumpage as a ''financial contribution'', its finding that stumpage is ''specific'', its presumption that an alleged benefit from stumpage passes through an arm's-length transaction to a downstream recipient, its measurement of the ''adequacy of remuneration'' by reference to conditions in another country rather than prevailing market conditions in Canada, and its inflation of the subsidy found by calculating a ''weighted average country-wide rate'' based upon only a portion of Canadian exports of softwood lumber to the United States.

With respect to the preliminary critical circumstances determination, Canada considers this determination to be inconsistent with Articles 17.1, 17.3, 17.4, 19.4, and 20.6 of the SCM Agreement because it is based upon an alleged export subsidy that was found to be *de minimis,* purports to apply a rate that is in excess of the rate determined for subsidies found to have been bestowed inconsistently with GATT 1994 and the SCM Agreement, was made without the requisite finding of injury caused by massive imports of softwood lumber benefiting from this alleged export subsidy, and was based on a distorted finding of ''massive imports''. Furthermore, there is no basis in the SCM Agreement for the application of provisional measures pursuant to such a determination.

Section 777a(e)(2)(A) and (B) of the Tariff Act of 1930 provides that, in certain situations, DOC may limit its investigation to less than all known exporters or producers of the subject merchandise or calculate a single, country-wide subsidy rate to be applied to all exporters and producers. The regulations at 19 CFR 351.214(k) and § 351.213(b) and (k) concern administrative reviews of countervailing duty orders. In its panel request, Canada describes its claims against section 777a(e)(2)(A) and (B) and the regulations in the following manner:

The U.S. measures at issue with regard to expedited and administrative reviews are section 777A(e)(2)(A) and (B) of the Tariff Act of 1930, U.S. Department of Commerce regulations at 19 CFR 351.214(k) and § 351.213(b) and (k), and the operation of these measures in the ongoing U.S. countervailing duty proceeding against certain softwood lumber products from Canada. Canada considers these measures to be inconsistent with U.S. obligations under Article VI:3 of the GATT 1994 and Articles 10, 19.3, 19.4, 21.1, 21.2 and 32.1 of the SCM Agreement. Canada also considers that the United States has failed to ensure that its laws and regulations are in conformity with its WTO obligations as required by Article 32.5 of the SCM Agreement and Article XVI:4 of the WTO Agreement.

Public Comment: Requirements for Submissions

Interested persons are invited to submit written comments concerning the issues raised in the dispute. Comments must be in English and provided in fifteen copies. A person requesting that information contained in a comment submitted by that person be treated as confidential business information must certify that such information is business confidential and would not customarily be released to the public by the commenter. Confidential business information must be clearly marked ''BUSINESS CONFIDENTIAL'' in a contrasting color ink at the top of each page of each copy.

Information or advice contained in a comment submitted, other than business confidential information, may be determined by USTR to be confidential in accordance with section 135(g)(2) of the Trade Act of 1974 (19 U.S.C. 2155(g)(2)). If the submitter believes that information or advice may qualify as such, the submitter—

(1) Must so designate the information or advice;

(2) Must clearly mark the material as ''SUBMITTED IN CONFIDENCE'' in a contrasting color ink at the top of each page of each copy; and

(3) Is encouraged to provide a non-confidential summary of the information or advice.

Pursuant to section 127(e) of the URAA (19 U.S.C. 3537(e)), USTR will maintain a file on this dispute settlement proceeding, accessible to the public, in the USTR Reading Room, which is located at 1724 F Street, N.W., Washington, D.C. 20508. The public file will include non-confidential comments received by USTR from the public with respect to the dispute; if a dispute settlement panel is convened, the U.S. submissions to that panel, the submissions, or non-confidential summaries of submissions, to the panel received from other participants in the dispute, as well as the report of the panel; and, if applicable, the report of the Appellate Body. An appointment to review the public file (Docket WTO/DS-__, Softwood Lumber Dispute) may be made by calling Brenda Webb, (202) 395–6186. The USTR Reading Room is open to the public from 9:30 a.m. to 12 noon and 1 p.m. to 4 p.m., Monday through Friday.

Julia Christine Bliss,

Acting Assistant United States Trade Representative for Monitoring and Enforcement.

[FR Doc. 01–21832 Filed 8–28–01; 8:45 am]

BILLING CODE 3190–01–M

DEPARTMENT OF TRANSPORTATION

Federal Aviation Administration

Notice of Availability of a Tier 1 Draft Environmental Impact Statement (DEIS) for FAA Site Approval and Land Acquisition by the State of Illinois for a Proposed South Suburban Airport, and Notice of Public Comment Period and Schedule of Public Hearing

AGENCY: Federal Aviation Administration (FAA), DOT.

ACTION: Notice of availability, notice of public comment period, notice of public hearing.

SUMMARY: The Federal Aviation Administration (FAA) is issuing this notice to advise the public that a Tier 1 Draft Environmental Impact Statement (DEIS)—FAA Site Approval and Land Acquisition by the State of Illinois for a

Proposed South Suburban Airport, has been prepared and is available for public review and comment. Written requests for the Tier 1 DEIS and written comments on the Tier 1 DEIS can be submitted to the individual listed in the section **FOR FURTHER INFORMATION CONTACT**. A public hearing will be held on October 4, 2001. The public comment period will commence on August 31, 2001 and will close on October 23, 2001.

PUBLIC COMMENT AND A WORKSHOP/MEETING: The start of the public comment period on the Tier 1 DEIS will be August 31, 2001 and will end on October 23, 2001 (which includes the Council on Environmental Quality's required 45 day public comment period). A Public Hearing will be held on October 4, 2001. Public comments will begin at 4:00 p.m. The public hearing will last till 8:00 p.m. The location for the public hearing is the Holiday Inn, 500 Holiday Plaza Drive, Matteson, Illinois.

Copies of the Tier 1 DEIS may be viewed during regular business hours at the following locations:

1. Chicago Airports District Office, Room 312, Federal Aviation Administration, 2300 East Devon Avenue, Des Plaines, Illinois 60018.
2. Governors State University Library, Governors State University, University Park, Illinois 60466.
3. Joliet Public Library, 150 North Ottawa Street, Joliet, Illinois 60432.
4. Northwestern University Library, 1935 Sheridan Road, Evanston, Illinois 60202.
5. Harold Washington Public Library, 400 South State Street, Chicago, Illinois 60605.
6. Kankakee Public Library, 304 South Indiana, Kankakee, Illinois 60901.
7. Matteson Public Library, 801 South School Avenue, Matteson, Illinois 60443.
8. Crete Public Library, 1177 North Main Street, Crete, Illinois 60417.
9. Indiana University Northwest Library, 3400 Broadway, Gary, Indiana 46408.
10. Purdue University, Calumet Campus Library, 2200 169th Street, Hammond, Indiana 46323.
11. Village of Manteno, Village Hall, 269 North Main Street, Manteno, Illinois 60950.
12. Village of Monee, Village Hall, 5130 West Court Street, Monee, Illinois 60449.
13. Village of Beecher, Village Hall, 724 Penfield, Beecher, Illinois 60401.
14. Village of Peotone, Village Hall, 208 East Main Street, Peotone, Illinois 60468.
15. College of DuPage, Learning Resources Center (Library), 425 Second Street, Glen Ellyn, Illinois 60137.
16. Chicago Southland Development Inc., Third Airport Information Clearinghouse, 1655 Union Avenue, Chicago Heights, Illinois 60411.
17. Illinois Department of Transportation, 310 South Michigan Avenue, Chicago, Illinois 60604.
18. Illinois Department of Transportation, Illinois Division of Aeronautics, One Langhorne Bond Drive/Capital Airport, Springfield, Illinois 62707.
19. Illinois Department of Transportation, South Suburban Airport Program Office, 4749 Lincoln Mall Drive, Suite 501, Matteson Illinois 60443.

FOR FURTHER INFORMATION, CONTACT: Denis R. Rewerts, Capacity Officer, Federal Aviation Administration, Chicago Airports District Office, Room 312, 2300 East Devon Avenue, Des Plaines, Illinois 60018. Mr. Rewerts can be contacted at (847) 294–7195 (voice), (847) 294–7046 (facsimile) or by e-mail at 9–AGL–SSA–EIS–PROJECT@faa.gov.

SUPPLEMENTARY INFORMATION: At the request of the State of Illinois, Department of Transportation, the FAA is preparing a tiered Environmental Impact Statement for site approval of a potential future air carrier airport in the south suburban area of Chicago. FAA Site approval and acquisition of land by the State of Illinois would preserve the option of developing a potential, future air carrier airport to serve the greater Chicago region if determined necessary and appropriate to meet future aviation capacity needs in the region. All reasonable alternatives will be considered including the no-action option. No use of Federal funds or Airport Layout Plan approval nor approval of any airport facilities is contemplated under this action. A subsequent tier, or tiers, may be prepared and considered at a later date to assess the potential impacts resulting from development of aviation facilities, as these issues become ripe for decision.

Comments from interested parties on the Tier 1 DEIS are encouraged and may be presented verbally at a public hearing or may be submitted in writing to the FAA at the address listed in section entitled **FOR INFORMATION CONTACT**. The comment period will close on October 23, 2001.

Issued in Des Plaines, Illinois, on August 22, 2001.

Philip M. Smithmeyer,

Manager, Chicago Airports District Office, FAA, Great Lakes Region.

[FR Doc. 01–21827 Filed 8–28–01; 8:45 am]

BILLING CODE 4910–13–M

DEPARTMENT OF TRANSPORTATION

Surface Transportation Board

[STB Finance Docket No. 34082]

Union Pacific Railroad Company—Trackage Rights Exemption—The Burlington Northern and Santa Fe Railway Company

The Burlington Northern and Santa Fe Railway Company (BNSF) has agreed to grant temporary overhead trackage rights to Union Pacific Railroad Company (UP) over approximately 129.2 miles of BNSF trackage extending from BNSF milepost 218.1, near Temple, TX, to BNSF milepost 6.1, near Fort Worth, TX.[1]

The transaction was scheduled to be consummated on August 20, 2001. The temporary trackage rights will facilitate maintenance work on UP's lines.

As a condition to this exemption, any employees affected by the trackage rights will be protected by the conditions imposed in *Norfolk and Western Ry. Co.—Trackage Rights—BN,* 354 I.C.C. 605 (1978), as modified in *Mendocino Coast Ry., Inc.—Lease and Operate,* 360 I.C.C. 653 (1980).

This notice is filed under 49 CFR 1180.2(d)(7). If it contains false or misleading information, the exemption is void *ab initio*. Petitions to revoke the exemption under 49 U.S.C. 10502(d) may be filed at any time. The filing of a petition to revoke will not automatically stay the transaction.

An original and 10 copies of all pleadings, referring to STB Finance Docket No. 34082 must be filed with the Surface Transportation Board, Office of the Secretary, Case Control Unit, 1925 K Street, N.W., Washington, DC 20423–0001. In addition, one copy of each pleading must be served on Robert T. Opal, Esq., Union Pacific Railroad Company, 1416 Dodge Street, Room 830, Omaha, NE 68179.

[1] On August 9, 2001, UP concurrently filed a petition for exemption in STB Finance Docket No. 34082 (Sub-No. 1), *Union Pacific Railroad Company—Trackage Rights Exemption—The Burlington Northern and Santa Fe Railway Company*, wherein UP requests that the Board permit the proposed temporary overhead trackage rights arrangement described in the present proceeding to expire on September 23, 2001. That petition will be addressed by the Board in a separate decision.

Board decisions and notices are available on our website at *www.stb.dot.gov.*

Decided: August 22, 2001.

By the Board, David M. Konschnik, Director, Office of Proceedings.

Vernon A. Williams,

Secretary.

[FR Doc. 01–21684 Filed 8–28–01; 8:45 am]

BILLING CODE 4915–00–P

DEPARTMENT OF TRANSPORTATION

Surface Transportation Board

[STB Docket Nos. AB–590X and AB–193 (Sub-No. 2X)]

Maryland Mass Transit Administration—Abandonment Exemption in Baltimore City, Baltimore County, and Anne Arundel County, MD and Canton Railroad Company—Discontinuance of Trackage Rights Exemption

Maryland Mass Transit Administration (MTA) and Canton Railroad Company (Canton) have filed a notice of exemption under 49 CFR 1152 Subpart F—*Exempt Abandonments and Discontinuances of Trackage Rights* for MTA to abandon and Canton to discontinue trackage rights over MTA's line of railroad known as the South Line-Central Light Rail Line (Line) from the Line's point of connection with CSX Transportation, Inc. (CSXT) at Patapsco Avenue in Baltimore City, MD (CSXT milepost 0.0, Clifford Junction, MD), to the end of the Line at Dorsey (Dorsey Road), in Glen Burnie, MD, within Baltimore City, Baltimore County, and Anne Arundel County, MD. The line traverses United States Postal Service Zip Codes 21225, 21227, 21090, and 21061.

MTA and Canton have certified that: (1) No local traffic has moved over the line for at least 2 years; (2) there is no overhead traffic that is to be rerouted over other lines; (3) no formal complaint filed by a user of rail service on the line (or by a state or local government entity acting on behalf of such user) regarding cessation of service over the line either is pending with the Surface Transportation Board (Board) or with any U.S. District Court or has been decided in favor of complainant within the 2-year period; and (4) the requirements at 49 CFR 1105.7 (environmental reports), 49 CFR 1105.8 (historic reports), 49 CFR 1105.11 (transmittal letter), 49 CFR 1105.12 (newspaper publication), and 49 CFR 1152.50(d)(1) (notice to governmental agencies) have been met.

As a condition to these exemptions, any employee adversely affected by the abandonment or discontinuance shall be protected under *Oregon Short Line R. Co.—Abandonment—Goshen,* 360 I.C.C. 91 (1979). To address whether this condition adequately protects affected employees, a petition for partial revocation under 49 U.S.C. 10502(d) must be filed. Provided no formal expression of intent to file an offer of financial assistance (OFA) has been received, these exemptions will be effective on September 28, 2001, unless stayed pending reconsideration. Petitions to stay that do not involve environmental issues,[1] formal expressions of intent to file an OFA under 49 CFR 1152.27(c)(2)[2] and trail use/rail banking requests under 49 CFR 1152.29 must be filed by September 10, 2001. Petitions to reopen or requests for public use conditions under 49 CFR 1152.28 must be filed by September 18, 2001, with: Surface Transportation Board, Office of the Secretary, Case Control Unit, 1925 K Street, N.W., Washington, DC 20423.

MTA states that the line is suitable for the public purpose of light rail mass transportation, and it will continue to use the right-of-way for provision of such service after the abandonment and discontinuance take effect. MTA also states that the Line is not suitable for any other concurrent use, public or private and it is not willing to transfer title to the right-of-way or use the property for other than light rail purposes.

A copy of any petition filed with the Board should be sent to applicants' representative: Jamie P. Rennert, Esq., Foley & Lardner, 888 Sixteenth Street, N.W., Washington, DC 20006.

If the verified notice contains false or misleading information, the exemption is void *ab initio.*

MTA and Canton have filed an environmental report which addresses the abandonment's effects, if any, on the environment and historic resources. SEA will issue an environmental assessment (EA) by August 31, 2001. Interested persons may obtain a copy of the EA by writing to SEA (Room 500, Surface Transportation Board, Washington, DC 20423) or by calling SEA, at (202) 565–1545. Comments on environmental and historic preservation matters must be filed within 15 days after the EA becomes available to the public.

Pursuant to the provisions of 49 CFR 1152.29(e)(2), MTA shall file a notice of consummation with the Board to signify that it has exercised the authority granted and fully abandoned its line. If consummation has not been effected by MTA's filing of a notice of consummation by August 29, 2002, and there are no legal or regulatory barriers to consummation, the authority to abandon will automatically expire.

Board decisions and notices are available on our website at ''WWW.STB.DOT.GOV.''

Decided: August 22, 2001.

By the Board, David M. Konschnik, Director, Office of Proceedings.

Vernon A. Williams,

Secretary.

[FR Doc. 01–21794 Filed 8–28–01; 8:45 am]

BILLING CODE 4915–00–P

[1] The Board will grant a stay if an informed decision on environmental issues (whether raised by a party or by the Board's Section of Environmental Analysis (SEA) in its independent investigation) cannot be made before the exemption's effective date. *See Exemption of Out-of-Service Rail Lines,* 5 I.C.C.2d 377 (1989). Any request for a stay should be filed as soon as possible so that the Board may take appropriate action before the exemption's effective date.

[2] Each offer of financial assistance must be accompanied by the filing fee, which currently is set for $1000. *See* 49 CFR 1002.2(f)(25).

DEPARTMENT OF THE TREASURY

Fiscal Service

Surety Companies Acceptable on Federal Bonds: Termination—Star Insurance Company

AGENCY: Financial Management Service, Fiscal Service, Department of the Treasury.

ACTION: Notice.

SUMMARY: This is Supplement No. 2 to the Treasury Department Circular 570; 2001 Revision, published July 2, 2001 at 66 FR 35024.

FOR FURTHER INFORMATION CONTACT: Surety Bond Branch at (202) 874–7102.

SUPPLEMENTARY INFORMATION: Notice is hereby given that the Certificate of Authority issued by the Treasury to the above named Company, under the United States Code, Title 31, Sections 9304–9308, to qualify as an acceptable surety on Federal bonds is hereby terminated effective today.

The Company was last listed as an acceptable surety on Federal bonds at 66 FR 35055, July 2, 2001.

With respect to any bonds, including continuous bonds, currently in force with the above listed Company, bond-approving officers should secure new bonds with acceptable sureties in those instances where a significant amount of liability remains outstanding. In addition, in no event, should bonds that are continuous in nature be renewed.

The Circular may be viewed and downloaded through the Internet at http://www.fms.treas.gov.c570/index.html. A hard copy may be purchased from the Government Printing Office (GPO) Subscription Service, Washington, DC, Telephone (202) 512–1800. When ordering the Circular from GPO, use the following stock number: 769–004–04067–1.

Questions concerning this Notice may be directed to the U.S. Department of the Treasury, Financial Management Service, Financial Accounting and Service Division, Surety Bond Branch, 3700 East-West Highway, Room 6A04, Hyattsville, MD 20782.

Dated: August 22, 2001.

Judith R. Tillman,

Assistant Commissioner, Financial Operations, Financial Management Service.

[FR Doc. 01–21797 Filed 8–28–01; 8:45 am]

BILLING CODE 4810–35–M

DEPARTMENT OF VETERANS AFFAIRS

National Research Advisory Council; Notice of Meeting

The Department of Veterans Affairs (VA) gives notice under Public Law 92–463 (Federal Advisory Committee Act) that the Veterans Affairs National Research Advisory Council will meet at the Residence Inn by Marriott, Pentagon City in the Eisenhower Ballroom, 550 Army Navy Drive, Arlington, VA 22202, on September 5, 2001, from 8 a.m. to 1 a.m. The agenda for this session of the meeting will include the minutes from the previous meeting and overview of the VA Career Development Program, research infrastructure needs, and the Rehabilitation Research and Development Service. Established by the Secretary of the VA, the purpose of the Council is to provide external advice and review for VA's research mission. Those planning to attend the open meeting should contact Ms. Lisa Gilbert, Office of Research and Development at (202) 273–8243.

Dated: August 21, 2001.

Nora E. Egan,

Committee Management Officer.

[FR Doc. 01–21803 Filed 8–28–01; 8:45 am]

BILLING CODE 8320–01–M

DEPARTMENT OF VETERANS AFFAIRS

President's Task Force To Improve Health Care Delivery for Our Nation's Veterans; Notice of Meeting

The Department of Veterans Affairs (VA) gives notice under Public Law 92–463 that a meeting of the President's Task Force to Improve Health Care Delivery for Our Nation's Veterans will take place on Wednesday, September 12, 2001. The meeting will be held in the Polaris Room at the Ronald Reagan International Trade Center, 1300 Pennsylvania Avenue, NW., Washington, DC. The meeting will convene at 8:30 a.m., adjourn at 5:30 p.m. and is open to the general public.

The purpose of the President's Task Force to Improve Health Care Delivery for Our Nation's Veterans is to:

(a) Identify ways to improve benefits and services for Department of Veterans Affairs (VA) beneficiaries and for Department of Defense (DoD) military retirees who are also eligible for benefits from VA, through better coordination of the activities of the two departments;

(b) Review barriers and challenges that impede VA and DoD coordination, including budgeting processes, timely billing, cost accounting, information technology, and reimbursement. Identify opportunities to improve such business practices to ensure high quality and cost effective health care; and

(c) Identify opportunities for improved resource utilization through partnership between VA and DoD to maximize the use of resources and infrastructure, including: buildings, information technology and data sharing systems, procurement of supplies, equipment and services, and delivery of care.

The meeting will commence with the formal administration of the oath to the appointed Task Force members followed by further introductions and discussion of administrative and substantive issues. Such issues will include dates and locations of future meetings, potential topics and similar matters pertaining to the official organization and charge of the Task Force.

The VA and DoD will separately brief the Task Force on existing VA–DoD joint-venture initiatives and other practices currently being undertaken within VA and DoD concerning the Task Force's designated mission under Executive Order 13214.

Representatives of the General Accounting Office (GAO) will provide a synopsis of their findings from GAO's studies of VA–DoD joint ventures and opportunities for sharing initiatives.

Task Force members will conduct brief question and answer sessions with VA, DoD and GAO officials following their respective presentations.

Interested parties can provide written comments to Mr. Richard Larson, Staff Assistant, Department of Veterans Affairs, Office of the Secretary, 810 Vermont Avenue, NW., Washington, DC 20420.

Dated: August 24, 2001.

By Direction of the Secretary.

Nora E. Egan,

Committee Management Officer.

[FR Doc. 01–21805 Filed 8–28–01; 8:45 am]

BILLING CODE 8320–01–M

DEPARTMENT OF VETERANS AFFAIRS

Special Medical Advisory Group; Notice of Meeting

As required by the Federal Advisory Committee Act, VA hereby gives notice that the Special Medical Advisory Group has scheduled a meeting on September 12, 2001. The meeting will convene at 9 a.m. and end at 2 p.m. The meeting will be held in Room 830 at VA Central Office, 810 Vermont Avenue, N.W., Washington, D.C. The purpose of the meeting is to advise the Secretary and Under Secretary for Health relative to the care and treatment of disabled veterans, and other matters pertinent to the Department's Veterans Health Administration (VHA).

The agenda for the meeting will include an update on VHA Communication Plans; Capital Asset Realignment for Enhanced Services (CARES) update; Graduation Medical Education update; and an overview on the Mental Health Program.

All sessions will be open to the public. Those wishing to attend should contact Celestine Brockington, Office of the Under Secretary for Health, Department of Veterans Affairs at (202) 273–5878.

Dated: August 23, 2001.

By direction of the Secretary of Veterans Affairs.

Nora E. Egan,

Committee Management Officer.

[FR Doc. 01–21804 Filed 8–28–01; 8:45 am]

BILLING CODE 8320–01–M

Federal Register

Wednesday,
August 29, 2001

Part II

Department of the Interior

Fish and Wildlife Service

50 CFR Part 20

Migratory Bird Hunting; Early Seasons and Bag and Possession Limits for Certain Migratory Game Birds in the Contiguous United States, Alaska, Hawaii, Puerto Rico, and the Virgin Islands; Final Rule

DEPARTMENT OF THE INTERIOR

Fish and Wildlife Service

50 CFR Part 20

RIN 1018–AH79

Migratory Bird Hunting; Early Seasons and Bag and Possession Limits for Certain Migratory Game Birds in the Contiguous United States, Alaska, Hawaii, Puerto Rico, and the Virgin Islands

AGENCY: Fish and Wildlife Service, Interior.

ACTION: Final rule.

SUMMARY: This rule prescribes the hunting seasons, hours, areas, and daily bag and possession limits of mourning, white-winged, and white-tipped doves; band-tailed pigeons; rails; moorhens and gallinules; woodcock; common snipe; sandhill cranes; sea ducks; early (September) waterfowl seasons; migratory game birds in Alaska, Hawaii, Puerto Rico, and the Virgin Islands; and some extended falconry seasons. Taking of migratory birds is prohibited unless specifically provided for by annual regulations. This rule permits taking of designated species during the 2001–02 season.

DATES: This rule is effective on September 1, 2001.

FOR FURTHER INFORMATION CONTACT: Jonathan Andrew, Chief, or Ron W. Kokel, Division of Migratory Bird Management, U.S. Fish and Wildlife Service, (703) 358–1714.

SUPPLEMENTARY INFORMATION:

Regulations Schedule for 2001

On April 30, 2001, we published in the **Federal Register** (66 FR 21298) a proposal to amend 50 CFR part 20. The proposal provided a background and overview of the migratory bird hunting regulations process, and dealt with the establishment of seasons, limits, and other regulations for migratory game birds under §§ 20.101 through 20.107, 20.109, and 20.110 of subpart K. On June 14, 2001, we published in the **Federal Register** (66 FR 32297) a second document providing supplemental proposals for early- and late-season migratory bird hunting regulations frameworks and the proposed regulatory alternatives for the 2001–02 duck hunting season. The June 14 supplement also provided detailed information on the 2001–02 regulatory schedule and announced the Service Migratory Bird Regulations Committee (SRC) and Flyway Council meetings.

On June 20–21, we held open meetings with the Flyway Council Consultants at which the participants reviewed information on the current status of migratory shore and upland game birds and developed recommendations for the 2001–02 regulations for these species plus regulations for migratory game birds in Alaska, Puerto Rico, and the Virgin Islands, special September waterfowl seasons in designated States, special sea duck seasons in the Atlantic Flyway, and extended falconry seasons. In addition, we reviewed and discussed preliminary information on the status of waterfowl as it relates to the development and selection of the regulatory packages for the 2001–02 regular waterfowl seasons. On July 24, we published in the **Federal Register** (66 FR 38494) a third document specifically dealing with the proposed frameworks for early-season regulations and the final regulatory alternatives for the 2001–02 duck hunting season.

On August 1–2, 2001, we held a public meeting in Washington, DC, as announced in the April 30, and June 14 **Federal Registers,** to review the status of waterfowl. Proposed hunting regulations were discussed for late seasons. On August 21, 2001, we published a fourth document in the **Federal Register** (66 FR 44010) which contained final frameworks for early migratory bird hunting seasons from which wildlife conservation agency officials from the States, Puerto Rico, and the Virgin Islands selected early-season hunting dates, hours, areas, and limits. We published proposed frameworks for the 2001–02 late-season migratory bird hunting regulations on August 28, 2001, in the **Federal Register**.

The final rule described here is the sixth in the series of proposed, supplemental, and final rulemaking documents for migratory game bird hunting regulations and deals specifically with amending subpart K of 50 CFR 20. It sets hunting seasons, hours, areas, and limits for mourning, white-winged, and white-tipped doves; band-tailed pigeons; rails; moorhens and gallinules; woodcock; common snipe; sandhill cranes; sea ducks; early (September) waterfowl seasons; mourning doves in Hawaii; migratory game birds in Alaska, Puerto Rico, and the Virgin Islands; youth waterfowl hunting day; and some extended falconry seasons.

NEPA Consideration

NEPA considerations are covered by the programmatic document, ''Final Supplemental Environmental Impact Statement: Issuance of Annual Regulations Permitting the Sport Hunting of Migratory Birds (FSES 88–14),'' filed with the Environmental Protection Agency on June 9, 1988. We published a Notice of Availability in the **Federal Register** on June 16, 1988 (53 FR 22582). We published our Record of Decision on August 18, 1988 (53 FR 31341). Copies are available from the address indicated under the caption **ADDRESSES**.

Endangered Species Act Consideration

We have considered provisions of the Endangered Species Act of 1973, as amended, (16 U.S.C. 1531–1543; hereinafter the Act) to ensure that hunting is not likely to jeopardize the continued existence of any species designated as endangered or threatened or modify or destroy its critical habitat and that the action is consistent with conservation programs for those species.

Executive Order (E.O.) 12866

This rule was reviewed by the Office of Management and Budget (OMB). The migratory bird hunting regulations are economically significant and are annually reviewed by OMB under E.O. 12866.

Regulatory Flexibility Act

These regulations have a significant economic impact on substantial numbers of small entities under the Regulatory Flexibility Act (5 U.S.C. 601 *et seq.*). We analyzed the economic impacts of the annual hunting regulations on small business entities in detail and issued a Small Entity Flexibility Analysis (Analysis) in 1998. The Analysis documented the significant beneficial economic effect on a substantial number of small entities. The primary source of information about hunter expenditures for migratory game bird hunting is the National Hunting and Fishing Survey, which is conducted at 5-year intervals. The Analysis was based on the 1996 National Hunting and Fishing Survey and the U.S. Department of Commerce's County Business Patterns, from which it was estimated that migratory bird hunters would spend between $429 million and $1.084 billion at small businesses in 1998. Copies of the Analysis are available upon request from the address indicated under the caption **ADDRESSES**.

Small Business Regulatory Enforcement Fairness Act

This rule is a major rule under 5 U.S.C. 804(2), the Small Business Regulatory Enforcement Fairness Act. For the reasons outlined above, this rule has an annual effect on the economy of $100 million or more. However, because

this rule establishes hunting seasons, we do not plan to defer the effective date under the exemption contained in 5 U.S.C. 808(1).

Paperwork Reduction Act

We examined these regulations under the Paperwork Reduction Act of 1995. We utilize the various recordkeeping and reporting requirements imposed under regulations established in 50 CFR part 20, Subpart K, in the formulation of migratory game bird hunting regulations. Specifically, OMB has approved the information collection requirements of the Migratory Bird Harvest Information Program and assigned control number 1018–0015 (expires 9/30/2001). This information is used to provide a sampling frame for voluntary national surveys to improve our harvest estimates for all migratory game birds in order to better manage these populations. OMB has also approved the information collection requirements of the Sandhill Crane Harvest Questionnaire and assigned control number 1018–0023 (expires 7/31/2003). The information from this survey is used to estimate the magnitude and the geographical and temporal distribution of harvest, and the portion it constitutes of the total population. A Federal agency may not conduct or sponsor, and a person is not required to respond to, a collection of information unless it displays a currently valid OMB control number.

Unfunded Mandates Reform Act

We have determined and certify, in compliance with the requirements of the Unfunded Mandates Reform Act, 2 U.S.C. 1502 *et seq.*, that this rulemaking will not ''significantly or uniquely'' affect small governments, and will not produce a Federal mandate of $100 million or more in any given year on local or State government or private entities. Therefore, this rule is not a ''significant regulatory action'' under the Unfunded Mandates Reform Act.

Civil Justice Reform—Executive Order 12988

The Department, in promulgating this rule, has determined that this rule will not unduly burden the judicial system and meets the requirements of sections 3(a) and 3(b)(2) of Executive Order 12988.

Takings Implication Assessment

In accordance with Executive Order 12630, this rule, authorized by the Migratory Bird Treaty Act, does not have significant takings implications and does not affect any constitutionally protected property rights. This rule will not result in the physical occupancy of property, the physical invasion of property, or the regulatory taking of any property. In fact, this rule will allow hunters to exercise otherwise unavailable privileges, and, therefore, reduces restrictions on the use of private and public property.

Federalism Effects

Due to the migratory nature of certain species of birds, the Federal Government has been given responsibility over these species by the Migratory Bird Treaty Act. We annually prescribe frameworks from which the States make selections and employ guidelines to establish special regulations on Federal Indian reservations and ceded lands. This process preserves the ability of the States and Tribes to determine which seasons meet their individual needs. Any State or Tribe may be more restrictive than the Federal frameworks at any time. The frameworks are developed in a cooperative process with the States and the Flyway Councils. This allows States to participate in the development of frameworks from which they will make selections, thereby having an influence on their own regulations. These rules do not have a substantial direct effect on fiscal capacity, change the roles or responsibilities of Federal or State governments, or intrude on State policy or administration. Therefore, in accordance with Executive Order 13132, these regulations do not have significant federalism effects and do not have sufficient federalism implications to warrant the preparation of a Federalism Assessment.

Government-to-Government Relationship With Tribes

In accordance with the President's memorandum of April 29, 1994, ''Government-to-Government Relations with Native American Tribal Governments'' (59 FR 22951), E.O. 13175, and 512 DM 2, we have evaluated possible effects on Federally recognized Indian tribes and have determined that there are no effects.

Energy Effects—E.O. 13211

On May 18, 2001, the President issued E.O. 13211 on regulations that significantly affect energy supply, distribution, and use. E.O. 13211 requires agencies to prepare Statements of Energy Effects when undertaking certain actions. While this rule is a significant regulatory action under E.O. 12866, it is not expected to adversely affect energy supplies, distribution, or use. Therefore, this action is not a significant energy action and no Statement of Energy Effects is required.

Regulations Promulgation

The rulemaking process for migratory game bird hunting must, by its nature, operate under severe time constraints. However, we intend that the public be given the greatest possible opportunity to comment on the regulations. Thus, when the preliminary proposed rulemaking was published, we established what we believed were the longest periods possible for public comment. In doing this, we recognized that when the comment period closed, time would be of the essence. That is, if there were a delay in the effective date of these regulations after this final rulemaking, the States would have insufficient time to implement their selected season dates and limits and start their seasons in a timely manner.

We therefore find that ''good cause'' exists, within the terms of 5 U.S.C. 553(d)(3) of the Administrative Procedure Act, and these regulations will, therefore, take effect immediately upon publication. Accordingly, with each conservation agency having had an opportunity to participate in selecting the hunting seasons desired for its State or Territory on those species of migratory birds for which open seasons are now prescribed, and consideration having been given to all other relevant matters presented, certain sections of title 50, chapter I, subchapter B, part 20, subpart K, are hereby amended as set forth below.

List of Subjects in 50 CFR Part 20

Exports, Hunting, Imports, Reporting and recordkeeping requirements, Transportation, Wildlife.

Dated: August 23, 2001.

Joseph E. Doddridge,

Acting Assistant Secretary for Fish and Wildlife and Parks.

PART 20—[AMENDED]

For the reasons set out in the preamble, title 50, chapter I, subchapter B, Part 20, subpart K of the Code of Federal Regulations is amended as follows:

1. The authority citation for Part 20 continues to read as follows:

Authority: 16 U.S.C. 703–712 and 16 U.S.C. 742 a-j, Pub. L. 106–108.

BILLING CODE 4310–55–P

Note - The following annual hunting regulations provided for by §§20.101 through 20.106 and 20.109 of 50 CFR 20 will not appear in the Code of Federal Regulations because of their seasonal nature.

2. Section 20.101 is revised to read as follows:

§20.101 Seasons, limits, and shooting hours for Puerto Rico and the Virgin Islands

Subject to the applicable provisions of the preceding sections of this part, areas open to hunting, respective open seasons (dates inclusive), shooting and hawking hours, and daily bag and possession limits for the species designated in this section are prescribed as follows:

Shooting and hawking hours are one-half hour before sunrise until sunset.

CHECK COMMONWEALTH REGULATIONS FOR AREA DESCRIPTIONS AND ANY ADDITIONAL RESTRICTIONS.

(a) Puerto Rico

	Season Dates	Limits Bag	Limits Possession
Doves and Pigeons			
Zenaida, white-winged, and mourning doves	Sept. 1-Oct. 30	10	10
Scaly-naped pigeons	Sept. 1-Oct. 30	5	5
Ducks	Nov. 3-Dec. 10 &	6	12
	Jan. 12-Jan. 28	6	12
Common Moorhens	Nov. 3-Dec. 10 &	6	12
	Jan. 12-Jan. 28	6	12
Common Snipe	Nov. 3-Dec. 10 &	8	16
	Jan. 12-Jan. 28	8	16

Restrictions: In Puerto Rico, the season is closed on the ruddy duck, white-cheeked pintail, West Indian whistling duck, fulvous whistling duck, masked duck, purple gallinule, American coot, and Caribbean coot, white-crowned pigeon and plain pigeon. Hunting is closed in the area known an Caño Tiburones.

Closed Areas: Closed areas are described in the August 21, 2001, Federal Register (66 FR 44010).

(b) Virgin Islands

	Season Dates	Limits Bag	Limits Possession
Zenaida doves	Sept. 1-Sept. 30	10	10
Ducks	CLOSED		

Restrictions: In the Virgin Islands, the seasons are closed for ground or quail doves, pigeons, ruddy duck, white-cheeked pintail, West Indian whistling duck, fulvous whistling duck, masked duck, and purple gallinule.

Closed Areas: Ruth Cay, just south of St. Croix, is closed to the hunting of migratory game birds.

3. Section 20.102 is revised to read as follows:

§20.102 Seasons, limits, and shooting hours for Alaska.

Subject to the applicable provisions of the preceding sections of this part, areas open to hunting, respective open seasons (dates inclusive), shooting and hawking hours, and daily bag and possession limits for the species designated in this section are prescribed as follows:

Shooting and hawking hours are one-half hour before sunrise until sunset. Area descriptions were published in the August 21, 2001, Federal Register (66 FR 44010).

CHECK STATE REGULATIONS FOR AREA DESCRIPTIONS AND ANY ADDITIONAL RESTRICTIONS.

Area Seasons	Dates
North Zone	Sept. 1-Dec. 16
Gulf Coast Zone	Sept. 1-Dec. 16
Southeast Zone	Sept. 1-Dec. 16
Pribilof & Aleutian Islands Zone	Oct. 8-Jan. 22
Kodiak Zone	Oct. 8-Jan. 22

Daily Bag and Possession Limits

Area	Ducks(1)	Dark Geese(2)(3)	Light Geese (2)	Brant	Common Snipe	Sandhill Cranes(4)
North Zone	10-30	4-8	3-6	2-4	8-16	3-6
Gulf Coast Zone	8-24	4-8	3-6	2-4	8-16	2-4
Southeast Zone	7-21	4-8	3-6	2-4	8-16	2-4
Pribilof and Aleutian Islands Zone	7-21	4-8	3-6	2-4	8-16	2-4
Kodiak Zone	7-21	4-8	3-6	2-4	8-16	2-4

(1) The basic duck bag limits may include no more than 1 canvasback daily and 3 in possession, and may not include sea ducks. In addition to the basic duck limits, Alaska may select sea duck limits of 10 daily, 20 in possession, singly or in the aggregate, including no more than 6 each of either harlequin or long-tailed ducks. Sea ducks include scoters, common and king eiders, harlequin ducks, long-tailed ducks, and common and red-breasted mergansers. The season is closed for Steller's and spectacled eiders.

(2) Dark geese include Canada and white-fronted geese. Light geese include snow geese and Ross' geese. Separate limits apply to brant. The season for emperor geese is closed Statewide.

(3) In Units 5 and 6, the taking of Canada geese is only permitted from September 28 through December 16. In Unit 9(d) and the Unimak Island portion of Unit 10, the limits for dark geese are 6 daily and 12 in possession. In the Middleton Island portion of Unit 6, the taking of Canada geese is by special permit only, with a daily bag and possession limit of 1.

(4) In Unit 17, the daily bag limit for sandhill cranes is 2 and the possession limit is 4.

Falconry: The total combined bag and possession limit for migratory game birds taken with the use of a falcon under a falconry permit is 3 per day, 6 in possession, and may not exceed a more restrictive limit for any species listed in this subsection.

Special Tundra Swan Season: In Units 18, 22, and 23, there will be a tundra swan season from September 1 through October 31 with a season limit of 3 tundra swans per hunter. This season is by registration permit only; hunters will be issued 1 permit allowing the take of up to 3 tundra swans. Hunters will be required to file a harvest report after the season is completed. Up to 500 permits may be issued in Unit 18 and 300 permits each in Units 22 and 23. In Unit 17, there will be an experimental tundra swan season from September 1 through October 31, with a season limit of 3 tundra swans per hunter. This season is by registration permit only; hunters will be issued 1 permit allowing the take of up to 3 tundra swans. Hunters will be required to file a harvest report after the season is completed. Up to 200 permits may be issued. Season evaluation to adhere to guidelines for experimental seasons as described in the Pacific Flyway Management Plan for the Western Population of (Tundra) swans.

4. Section 20.103 is revised to read as follows:

§20.103 Seasons, limits, and shooting hours for doves and pigeons.

Subject to the applicable provisions of the preceding sections of this part, areas open to hunting, respective open seasons (dates inclusive), shooting and hawking hours, and daily bag and possession limits for the species designated in this section are prescribed as follows:

Shooting and hawking hours are one-half hour before sunrise until sunset except as otherwise noted. Area descriptions were published in the August 21, 2001, Federal Register (66 FR 44010).

CHECK STATE REGULATIONS FOR AREA DESCRIPTIONS AND ANY ADDITIONAL RESTRICTIONS.

(a) Doves

Note: Unless otherwise specified, the seasons listed below are for mourning doves only.

	Season Dates	Limits Bag	Limits Possession
EASTERN MANAGEMENT UNIT			
Alabama			
North Zone			
12 noon to sunset	Sept. 15 only	15	15
1/2 hour before sunrise to sunset	Sept. 16-Oct. 28 &		
	Dec. 22-Jan. 6	15	15
South Zone			
12 noon to sunset	Oct. 6-Nov. 25 &	12	12
	Dec. 22-Jan. 9	12	12
Delaware			
12 noon to sunset	Sept. 1-Sept. 22	12	24
1/2 hour before sunrise to sunset	Oct. 15-Oct. 27 &	12	24
	Dec. 10-Jan. 12	12	24
Florida (1)			
12 noon to sunset	Oct. 6-Oct. 29	12	24
1/2 hour before sunrise to sunset	Nov. 10-Nov. 25 &	12	24
	Dec. 8-Jan. 6	12	24
Georgia			
Zone 1			
12 noon to sunset	Sept. 1 only	12	24
1/2 hour before sunrise to sunset	Sept. 2-Sept. 30 &	12	24
	Nov. 22-Nov. 24 &	12	24
	Dec. 10-Jan. 15	12	24
Zone 2			
12 noon to sunset	Sept. 22 only	12	24
1/2 hour before sunrise to sunset	Sept. 23-Oct. 21 &	12	24
	Nov. 22-Nov. 24 &	12	24
	Dec. 10-Jan. 15	12	24
Illinois			
sunrise to sunset	Sept. 1-Oct. 17 &	15	30
	Nov. 3-Nov. 15	15	30
Indiana	Sept. 1-Oct. 16 &	15	30
	Nov. 9-Nov. 18 &	15	30
	Nov. 22-Nov. 25	15	30

	Season Dates	Limits Bag	Limits Possession
Kentucky			
11 a.m. to sunset	Sept. 1-Oct. 24	15	30
1/2 hour before sunrise to sunset	Nov. 22-Nov. 27	15	30
Louisiana			
12 noon to sunset	Sept. 1-Sept. 2 &	15	30
	Oct. 13-Oct. 14 &	15	30
	Dec. 22-Dec. 23	15	30
1/2 hour before sunrise to sunset	Sept. 3-Sept. 9 &	15	30
	Oct. 15-Nov. 18 &	15	30
	Dec. 24-Jan. 4	15	30
Maryland			
12 noon to sunset	Sept. 1-Oct. 21	12	24
1/2 hour before sunrise to sunset	Nov. 13-Nov. 18 &	12	24
	Dec. 18-Dec. 30	12	24
Mississippi	Sept. 1-Sept. 23 &	15	30
	Oct. 13-Oct. 27 &	15	30
	Dec. 22-Jan. 12	15	30
North Carolina			
12 noon to sunset	Sept. 1-Sept. 7	12	24
1/2 hour before sunrise to sunset	Sept. 8-Oct. 6 &	12	24
	Nov. 19-Nov. 24 & Dec. 19-Jan. 15	12	24
Ohio	Sept. 1-Oct. 16 &	12	24
	Nov. 2-Nov. 25	12	24
Pennsylvania			
12 noon to sunset	Sept. 1-Oct. 5 &	12	24
	Oct. 27-Nov. 24 &	12	24
	Dec. 26-Dec. 31	12	24
Rhode Island			
12 noon to sunset	Sept. 13-Sept. 30	12	24
1/2 hour before sunrise to sunset	Oct. 20-Nov. 17 &	12	24
	Dec. 22-Jan. 13	12	24
South Carolina			
12 noon to sunset	Sept. 1-Sept. 3	12	24
1/2 hour before sunrise to sunset	Sept. 4-Oct. 6 &	12	24
	Nov. 17-Nov. 24 &	12	24
	Dec. 21-Jan. 15	12	24
Tennessee			
12 noon to sunset	Sept. 1 only	15	30
1/2 hour before sunrise to sunset	Sept. 2-Sept. 26 &	15	30
	Oct. 13-Oct. 28 &	15	30
	Dec. 15-Jan. 1	15	30
Virginia			
12 noon to sunset	Sept. 1-Sept. 29	12	24
1/2 hour before sunrise to sunset	Oct. 13-Nov. 10 &	12	24
	Dec. 29-Jan. 9	12	24
West Virginia			
12 noon to sunset	Sept. 1 only	12	24
1/2 hour before sunrise to sunset	Sept. 2-Oct. 6 &	12	24
	Oct. 28-Nov. 10 &	12	24
	Dec. 17-Jan. 5	12	24
Wisconsin	Sept. 1-Oct. 30	15	30
CENTRAL MANAGEMENT UNIT			
Arkansas	Sept. 1-Sept. 23 &	15	30
	Oct. 6-Oct. 21 &	15	30
	Dec. 15-Jan. 4	15	30
Colorado	Sept. 1-Oct. 30	15	30
Kansas	Sept. 1-Oct. 30	15	30
Missouri	Sept. 1-Nov. 9	12	24
Montana	Sept. 1-Oct. 30	15	30
Nebraska	Sept. 1-Oct. 30	15	30
New Mexico (2)			
North Zone	Sept. 1-Oct. 30	15	30
South Zone	Sept. 1-Sept. 30 &	15	30
	Dec. 1-Dec. 30	15	30

	Season Dates	Limits Bag	Possession
North Dakota	Sept. 1-Oct. 28	15	30
Oklahoma	Sept. 1-Oct. 30	15	30
South Dakota (3)	Sept. 1-Oct. 19	15	30
Texas (4)			
North Zone	Sept. 1-Oct. 30	15	30
Central Zone	Sept. 1-Oct. 28 &	12	24
	Dec. 26-Jan. 6	12	24
South Zone			
Special Area	Sept. 21-Nov. 4 &	12	24
	Dec. 22-Jan. 11	12	24
(Special Season)			
12 noon to sunset	Sept. 1-Sept. 2 &	10	20
	Sept. 8-Sept. 9	10	20
Remainder of the South Zone	Sept. 21-Nov. 4 &	12	24
	Dec. 22-Jan. 15	12	24
Wyoming	Sept. 1-Oct. 30	15	30
WESTERN MANAGEMENT UNIT			
Arizona (5)	Sept. 1-Sept. 15 &	10	20
	Nov. 23-Jan. 6	10	20
California (6)	Sept. 1-Sept. 15 &	10	20
	Nov. 11-Dec. 25	10	20
Idaho	Sept. 1-Sept. 30	10	20
Nevada (6)	Sept. 1-Sept. 30	10	20
Oregon	Sept. 1-Sept. 30	10	20
Utah	Sept. 1-Sept. 30	10	20
Washington	Sept. 1-Sept. 15	10	20
OTHER POPULATIONS			
Hawaii (7)	Nov. 3-Nov. 25 &	10	10
	Dec. 1-Dec. 30 &	10	10
	Jan. 1-Jan. 21	10	10

(1) In Florida, the daily bag limit is 12 mourning and white-winged doves in the aggregate, of which not more than 4 may be white-winged doves. The possession limit is twice the daily bag limit.

(2) In New Mexico, the daily bag limit is 15 and the possession limit is 30 mourning and white-winged doves in the aggregate.

(3) In South Dakota, shooting hours are from sunrise to sunset.

(4) In Texas, the daily bag limit is 15 mourning, white-winged, and white-tipped doves in the aggregate, of which no more than 2 may be white-tipped doves. Possession limits are twice the daily bag limit. During the special season in the Special White-winged Dove Area of the South Zone, the daily bag limit is 10 mourning, white-winged, and white-tipped doves in the aggregate, of which no more than 5 may be mourning doves and 2 may be white-tipped doves. Possession limits are twice the daily bag limit.

(5) In Arizona, during September 1 through 15, the daily bag limit is 10 mourning and white-winged doves in the aggregate, of which no more than 6 may be white-winged doves. During November 23 through January 6, the daily bag limit is 10 mourning doves. The possession limit is twice the daily bag limit. See State regulations for restrictive shooting hours in certain areas.

(6) In the areas of California and Nevada open to white-winged dove hunting, the daily bag limit is 10 and the possession limit is 20 mourning and white-winged doves in the aggregate.

(7) In Hawaii, the season is only open on the island of Hawaii. The daily bag and possession limits are 10 mourning doves, spotted doves and chestnut-bellied sandgrouse in the aggregate. Shooting hours are from one-half hour before sunrise through one-half hour after sunset. Hunting is permitted only on weekends and State holidays.

(b) Band-tailed Pigeons

	Season Dates	Limits Bag	Possession
Arizona	Sept. 28-Oct. 8	5	10
California			
North Zone	Sept. 15-Sept. 23	2	4
South Zone	Dec. 15-Dec. 23	2	4
Colorado	Sept. 1-Sept. 30	5	10
New Mexico			
North Zone	Sept. 1-Sept. 20	5	10
South Zone	Oct. 1-Oct. 20	5	10
Oregon	Sept. 15-Sept. 23	2	4
Utah	Sept. 1-Sept. 30	5	10

5. Section 20.104 is revised to read as follows:

§20.104 Seasons, limits, and shooting hours for rails, woodcock, and common snipe.

Subject to the applicable provisions of the preceding sections of this part, areas open to hunting, respective open seasons (dates inclusive), shooting and hawking hours, and daily bag and possession limits for the species designated in this section are prescribed as follows:

Shooting and hawking hours are one-half hour before sunrise until sunset except as otherwise noted. Area descriptions were published in the August 21, 2001, Federal Register (66 FR 44010).

CHECK STATE REGULATIONS FOR AREA DESCRIPTIONS AND ANY ADDITIONAL RESTRICTIONS.

Note: States with deferred seasons may select those seasons at the same time they select waterfowl seasons in August. Consult late-season regulations for further information.

	Sora and Virginia Rails	Clapper and King Rails	Woodcock	Common Snipe
Daily bag limit	25 (1)	15 (2)	3	8
Possession limit	25 (1)	30 (2)	6	16
ATLANTIC FLYWAY				
Connecticut (3)	Sept. 1-Nov. 4	Sept. 1-Nov. 4	Oct. 27-Nov. 24	Oct. 27-Nov. 24
Delaware	Sept. 1-Nov. 9	Sept. 1-Nov. 9	Nov. 19-Dec. 7 & Dec. 19-Dec. 29	Nov. 19-Jan.31
Florida	Sept. 1-Nov. 9	Sept. 1-Nov. 9	Dec. 15-Jan. 13	Nov. 1-Feb. 15
Georgia	Sept. 8-Nov. 16	Sept. 8-Nov. 16	Dec. 22-Jan. 20	Nov. 15-Feb. 28
Maine	Sept. 1-Nov. 9	Closed	Oct. 6-Nov. 3	Sept. 1-Dec. 15
Maryland	Sept. 1-Nov. 9	Sept. 1-Nov. 9	Oct. 20-Nov. 10 & Jan. 12-Jan. 19	Sept. 19-Nov. 23 & Dec. 10-Jan. 19
Massachusetts (4)	Sept. 1-Nov. 9	Closed	Deferred	Sept. 1-Dec. 15
New Hampshire	Closed	Closed	Oct. 6-Nov. 4	Sept. 15-Nov. 4
New Jersey (5)				
North Zone	Sept. 1-Nov. 9	Sept. 1-Nov. 9	Oct. 18-Nov. 10	Sept. 22-Jan. 6
South Zone	Sept. 1-Nov. 9	Sept. 1-Nov. 9	Nov. 10-Nov. 24 & Dec. 21-Dec. 29	Sept. 21-Jan. 5
New York (6)	Sept. 1-Nov. 9	Closed	Oct. 6-Nov. 4	Sept. 1-Nov. 9
North Carolina	Sept. 1-Nov. 9	Sept. 1-Nov. 9	Dec. 17-Jan. 15	Nov. 14-Feb. 28
Pennsylvania	Sept. 1-Nov. 9	Closed	Oct. 20-Nov. 17	Oct. 20-Nov. 24
Rhode Island (7)	Sept. 8-Nov. 16	Sept. 8-Nov. 16	Nov. 1-Nov. 30	Sept. 8-Nov. 14
South Carolina	Sept. 16-Sept. 23 & Oct. 15-Dec. 15	Sept. 16-Sept. 23 & Oct. 15-Dec. 15	Jan. 2-Jan. 31	Nov. 14-Feb. 28
Vermont	Closed	Closed	Deferred	Deferred
Virginia	Sept. 11-Nov. 19	Sept. 11-Nov. 19	Nov. 3-Nov. 17 & Dec. 22-Jan. 5	Oct. 10-Oct. 13 & Oct. 22-Jan. 31
West Virginia	Sept. 1-Nov. 9	Closed	Oct. 13-Nov. 11	Sept. 1-Dec. 16
MISSISSIPPI FLYWAY				
Alabama (8)	Sept. 8-Sept. 23 & Nov. 28-Jan. 20	Sept. 8-Sept. 23 & Nov. 28-Jan. 20	Dec. 18-Jan. 31	Nov. 14-Feb. 28
Arkansas	Sept. 1-Nov. 9	Closed	Nov. 10-Dec. 9 & Dec. 29-Jan. 12	Nov. 3-Feb. 17
Illinois (9)	Sept. 1-Nov. 9	Closed	Oct. 20-Dec. 3	Sept. 1-Dec. 16
Indiana (10)	Sept. 1-Nov. 9	Closed	Oct. 5-Nov. 18	Sept. 1-Dec. 16
Iowa (11)	Sept. 1-Nov. 9	Closed	Oct. 6-Nov. 19	Sept. 1-Nov. 30
Kentucky	Sept. 1-Nov. 9	Closed	Oct. 20-Dec. 3	Sept. 19-Nov. 4 & Nov. 22-Jan. 20
Louisiana (12)	Sept. 15-Sept. 30	Sept. 15-Sept. 30	Dec. 15-Jan. 28	Deferred
Michigan (13)	Sept. 15-Nov. 14	Closed	Sept. 22-Nov. 5	Sept. 15-Nov. 14
Minnesota	Sept. 1-Nov. 4	Closed	Sept. 22-Nov. 5	Sept. 1-Nov. 4
Mississippi	Oct. 12-Dec. 20	Oct. 12-Dec. 20	Dec. 18-Jan. 31	Nov. 14-Feb. 28
Missouri	Sept. 1-Nov. 9	Closed	Oct. 15-Nov. 28	Sept. 1-Dec. 16
Ohio	Sept. 1-Nov. 9	Closed	Oct. 12-Nov. 25	Sept. 1-Nov. 25 & Dec. 3-Dec. 23
Tennessee	Deferred	Closed	Oct. 27-Dec. 10	Nov. 14-Feb. 28
Wisconsin	Deferred	Closed	Sept. 22-Nov. 5	Deferred

	Sora and Virginia Rails	Clapper and King Rails	Woodcock	Common Snipe
CENTRAL FLYWAY				
Colorado	Sept. 1-Nov. 9	Closed	Closed	Sept. 1-Dec. 16
Kansas	Sept. 1-Nov. 9	Closed	Oct. 12-Nov. 25	Sept. 1-Dec. 16
Montana	Closed	Closed	Closed	Sept. 1-Dec. 16
Nebraska (14)	Sept. 1-Nov. 9	Closed	Sept. 22-Nov. 5	Sept. 1-Dec. 16
New Mexico	Oct. 6-Dec. 14	Closed	Closed	Oct. 6-Jan. 20
North Dakota	Closed	Closed	Sept. 22-Nov. 4	Sept. 15-Nov. 25
Oklahoma	Sept. 1-Nov. 9	Closed	Nov. 1-Dec. 15	Oct. 1-Jan. 15
South Dakota (15)	Closed	Closed	Closed	Sept. 1-Oct. 31
Texas	Sept. 15-Sept. 30 & Oct. 27-Dec. 19	Sept. 15-Sept. 30 & Oct. 27-Dec. 19	Dec. 18-Jan. 31	Oct. 20-Feb. 3
Wyoming	Sept. 1-Nov. 9	Closed	Closed	Sept. 1-Dec. 16
PACIFIC FLYWAY				
Arizona	Closed	Closed	Closed	Oct. 12-Jan. 20
Colorado	Sept. 1-Nov. 9	Closed	Closed	Sept. 1-Dec. 16
Idaho:				
Area 1	Closed	Closed	Closed	Oct. 6-Jan. 18
Area 2	Closed	Closed	Closed	Oct. 6-Oct. 17 & Oct. 20-Jan. 20
Montana	Closed	Closed	Closed	Sept. 1-Dec. 16
New Mexico	Oct. 6-Dec. 14	Closed	Closed	Oct. 6-Jan. 20
Wyoming	Sept. 1-Nov. 9	Closed	Closed	Sept. 1-Dec. 16

NOTE: For all other States in the Pacific Flyway, snipe seasons have been deferred and no seasons are prescribed for woodcock and rails.

(1) The bag and possession limits for sora and Virginia rails apply singly or in the aggregate of these species.

(2) All bag and possession limits for clapper and king rails apply singly or in the aggregate of the two species and, unless otherwise specified, the limits are in addition to the limits on sora and Virginia rails in all States. In Connecticut, Delaware, Maryland, and New Jersey, the limits for clapper and king rails are 10 daily and 20 in possession.

(3) In Connecticut, the daily bag and possession limits may not contain more than 1 king rail. The common snipe daily bag and possession limits are 3 and 6, respectively.

(4) In Massachusetts, the sora rail limits are 5 daily and 5 in possession; the Virginia rail limits are 10 daily and 10 in possession.

(5) In New Jersey, the season for king rails is closed by State regulation.

(6) In New York, the rail daily bag and possession limits are 8 and 16, respectively. Seasons for sora and Virginia rails and common snipe are closed on Long Island.

(7) In Rhode Island, the sora and Virginia rails limits are 5 daily and 10 in possession, singly or in the aggregate; the clapper and king rail limits are 5 daily and 10 in possession, singly or in the aggregate; the common snipe limits are 5 daily and 10 in possession.

(8) In Alabama, the rail limits are 15 daily and 15 in possession, singly or in the aggregate.

(9) In Illinois, shooting hours are from sunrise to sunset.

(10) In Indiana, the sora rail limit is 25 daily and 25 in possession. The season on Virginia rails is closed.

(11) In Iowa, the limits for sora and Virginia rails are 12 daily and 24 in possession.

(12) Additional days occurring after September 30 will be published with the late season selections.

(13) In Michigan, the aggregate limits for sora and Virginia rails are 8 daily and 16 in possession.

(14) In Nebraska, the rail limits are 10 daily and 20 in possession.

(15) In South Dakota, the snipe limits are 5 daily and 15 in possession.

6. Section 20.105 is amended by revising paragraphs (a) through (f) to read as follows:

§20.105 Seasons, limits, and shooting hours for waterfowl, coots, and gallinules.

Subject to the applicable provisions of the preceding sections of this part, areas open to hunting, respective open seasons (dates inclusive), shooting and hawking hours, and daily bag and possession limits for the species designated in this section are prescribed as follows:

Shooting and hawking hours are one-half hour before sunrise until sunset, except as otherwise noted. Area descriptions were published in the August 21, 2001, Federal Register (66 FR 44010).

CHECK STATE REGULATIONS FOR AREA DESCRIPTIONS AND ANY ADDITIONAL RESTRICTIONS.

Note: States with deferred seasons may select those seasons at the same time they select waterfowl seasons in August. Consult late-seasons regulations for further information.

(a) Common Moorhens and Purple Gallinules

	Season Dates	Limits Bag	Limits Possession
ATLANTIC FLYWAY			
Delaware	Sept. 1-Nov. 9	15	30
Florida (1)	Sept. 1-Nov.9	15	30
Georgia	Nov. 17-Nov. 25 & Dec. 1-Jan. 20	15 15	30 30
Maine	Sept. 1-Nov. 9	15	30
New Jersey	Sept. 1-Nov. 9	10	20
New York			
Long Island	Closed	--	--
Remainder of State	Sept. 1-Nov. 9	8	16
North Carolina	Sept. 1-Nov. 9	15	30
Pennsylvania	Sept. 1-Nov. 9	15	30
South Carolina	Sept. 16-Sept. 23 & Oct. 15-Dec. 15	15 15	30 30
Virginia	Deferred	--	--
West Virginia	Deferred	--	--
MISSISSIPPI FLYWAY			
Alabama	Sept. 8-Sept. 23 & Nov. 28-Jan. 20	15 15	15 15
Arkansas	Sept. 1-Nov. 9	15	30
Indiana	Sept. 1-Nov. 9	15	30
Kentucky	Sept. 1-Nov. 9	15	30
Louisiana (2)	Sept. 15-Sept. 30	15	30
Michigan	Deferred	--	--
Minnesota	Deferred	--	--
Mississippi	Oct. 12-Dec. 20	15	30
Ohio	Sept. 1-Nov. 9	15	30
Tennessee	Deferred	--	--
Wisconsin	Deferred	--	--
CENTRAL FLYWAY			
New Mexico			
Zone 1	Oct. 6-Dec. 14	1	2
Zone 2	Oct. 6-Dec. 14	1	2
Oklahoma	Sept. 1-Nov. 9	15	30
Texas	Sept. 15-Sept. 30 & Oct. 27-Dec. 19	15 15	30 30
Wyoming	Deferred	--	--
PACIFIC FLYWAY			
All States	Deferred	--	--

(1) The season applies to common moorhens only.

(2) Additional days occurring after September 30 will be published with the late season selections.

(b) Sea Ducks (scoter, eider, and oldsquaw ducks in Atlantic Flyway).

Within the special sea duck areas, the daily bag limit is 7 scoter, eider, and oldsquaw ducks, singly or in the aggregate, of which no more than 4 may be scoters. Possession limits are twice the daily bag limit. These limits may be in addition to regular duck bag limits only during the regular duck season in the special sea duck hunting areas.

	Season Dates	Limits Bag	Limits Possession
Connecticut	Sept. 18-Jan. 19	7	14
Delaware	Sept. 20-Jan. 20	7	14
Georgia	Nov. 17-Nov. 25 & Dec. 1-Jan. 20	7 7	14 14
Maine	Deferred	--	--

	Season Dates	Limits Bag	Limits Possession
Maryland	Deferred	--	--
Massachusetts	Deferred	--	--
New Hampshire (1)	Sept. 15-Dec. 30	7	14
New Jersey	Sept. 18-Jan. 19	7	14
New York	Oct. 6-Jan. 20	7	14
North Carolina	Deferred	--	--
Rhode Island	Oct. 6-Jan. 20	7	14
South Carolina	Deferred	--	--
Virginia	Deferred	--	--

NOTE: Notwithstanding the provisions of this Part 20, the shooting of crippled waterfowl from a motorboat under power will be permitted in Maine, Massachusetts, New Hampshire, Rhode Island, Connecticut, New York, Delaware, Virginia and Maryland in those areas described, delineated, and designated in their respective hunting regulations as special sea duck hunting areas.

(1) In New Hampshire, the daily bag limit may include no more than 4 scoters, 4 eiders, or 4 oldsquaws.

(c) Early (September) Duck Seasons.

Note: Unless otherwise specified, the seasons listed below are for teal only.

	Season Dates	Limits Bag	Limits Possession
ATLANTIC FLYWAY			
Delaware (1)(2)	Sept. 6-Sept. 15	4	8
Florida (3)	Sept. 22-Sept. 26	4	8
Georgia	Sept. 15-Sept. 23	4	8
Maryland (1)	Sept. 13-Sept. 22	4	8
North Carolina (1)	Sept. 6-Sept. 15	4	8
South Carolina (4)	Sept. 22-Sept. 30	4	8
Virginia (1)	Sept. 15-Sept. 25	4	8
MISSISSIPPI FLYWAY			
Alabama	Sept. 8-Sept. 23	4	8
Arkansas (4)	Sept. 15-Sept. 30	4	8
Illinois (4)	Sept. 1-Sept. 16	4	8
Indiana (4)	Sept. 1-Sept. 16	4	8
Iowa (5)			
North Zone	Sept. 22-Sept. 26	--	--
South Zone	Sept. 22-Sept. 26	--	--
Kentucky (6)	Sept. 19-Sept. 23	4	8
Louisiana	Sept. 15-Sept. 30	4	8
Mississippi	Sept. 8-Sept. 23	4	8
Missouri (4)	Sept. 8-Sept. 23	4	8
Ohio (4)	Sept. 1-Sept. 16	4	8
Tennessee (7)	Sept. 8-Sept. 12	4	8
CENTRAL FLYWAY			
Colorado	Sept. 8-Sept. 16	4	8
Kansas			
Low Plains	Sept. 15-Sept. 30	4	8
High Plains	Sept. 15-Sept. 22	4	8
Nebraska (1)	Sept. 8-Sept. 16	4	8
New Mexico	Sept. 15-Sept. 23	4	8
Oklahoma			
Low Plains	Sept. 8-Sept. 23	4	8
High Plains	Sept. 8-Sept. 16	4	8
Texas	Sept. 15-Sept. 30	4	8

(1) Area restrictions. See State regulations.

(2) In Delaware, the shooting hours are from ½ hour before sunrise to 10:00 a.m.

(3) In Florida, the daily bag limit is 4 wood ducks and teal in the aggregate, no more than 2 of which may be wood ducks. The possession limit is twice the daily bag limit.

(4) Shooting hours are from sunrise to sunset.

(5) In Iowa, the September season is part of the regular season, and limits will conform to those set for the regular season.

(6) In Kentucky and Tennessee, the daily bag limit is 4 wood ducks and teal in the aggregate, of which no more than 2 may be wood ducks. The possession limit is twice the daily bag limit.

(d) Special Early Canada Goose Seasons.

	Season Dates	Limits Bag	Limits Possession
ATLANTIC FLYWAY			
Connecticut			
North Zone	Sept. 4-Sept. 25	5	10
South Zone	Sept. 17-Sept. 25	5	10
Delaware	Sept. 1-Sept. 15	5	10
Maine	Sept. 4-Sept. 25	3	6
Maryland			
Eastern Unit	Sept. 1-Sept. 15	5	10
Western Unit	Sept. 1-Sept. 25	5	10
Massachusetts (1)			
Central Zone	Sept. 4-Sept. 25	5	10
Coastal Zone	Sept. 4-Sept. 25	5	10
Western Zone	Sept. 4-Sept. 25	5	10
New Hampshire	Sept. 4-Sept. 25	3	6
New Jersey	Sept. 1-Sept. 29	5	10
New York			
Lake Champlain Zone	Sept. 4-Sept. 25	2	4
Northeastern Zone	Sept. 1-Sept. 25	5	10
Western Zone	Sept. 1-Sept. 25	5	10
Montezuma Zone	Sept. 1-Sept. 25	5	10
Southeastern Zone	Sept. 1-Sept. 25	5	10
Long Island Zone (2)	Sept. 4-Sept. 30	5	10
North Carolina			
Northeast Hunt Unit (3)	Sept. 1-Sept. 20	5	10
Rest of State	Sept. 4-Sept. 29	5	10
Pennsylvania			
Southeast Hunt Area	Sept. 1-Sept. 25	5	10
Rest of State	Sept. 1-Sept. 25	5	10
Rhode Island	Sept. 1-Sept. 30	5	10
South Carolina			
Early-Season Hunt Unit	Sept. 15-Sept. 30	5	10
Vermont			
Lake Champlain Zone	Sept. 4-Sept. 25	2	4
Interior Vermont Zone:			
Bennington, Rutland, & Windham Counties	Sept. 4-Sept. 25	5	10
Rest of Zone	Sept. 4-Sept. 25	2	4
Virginia	Sept. 1-Sept. 25	5	10
West Virginia	Sept. 1-Sept. 16	5	10
MISSISSIPPI FLYWAY			
Alabama	Sept. 1-Sept. 15	5	10
Illinois			
Northeast Zone	Sept. 1-Sept. 15	5	10
North Zone	Sept. 1-Sept. 15	2	4
Central Zone	Sept. 1-Sept. 15	2	4
South Zone	Sept. 1-Sept. 15	2	4
Indiana	Sept. 1-Sept. 15	5	10
Kentucky	Sept. 8-Sept. 12	2	4
Michigan			
Upper Peninsula	Sept. 1-Sept. 10	5	10
Lower Peninsula:			
Huron, Saginaw, and Tuscola Counties	Sept. 1-Sept. 10	2	4
Remainder	Sept. 1-Sept. 15	5	10
Minnesota			
Twin Cities Metro Zone	Sept. 1-Sept. 22	5	10
Southeast Goose Zone	Sept. 1-Sept. 22	2	4
Five Goose Zone	Sept. 1-Sept. 22	5	10
Northwest Goose Zone	Sept. 1-Sept. 15	2	4

	Season Dates	Limits Bag	Limits Possession
Mississippi (4)	Sept. 1-Sept. 15	5	10
Ohio (2)	Sept. 1-Sept. 15	5	10
Tennessee			
Middle Tennessee Zone	Sept. 1-Sept. 15	3	6
East Tennessee Zone	Sept. 1-Sept. 15	5	10
Wisconsin			
Early-Season Subzone A	Sept. 4-Sept. 15	5	10
Early-Season Subzone B	Sept. 4-Sept. 15	3	6
CENTRAL FLYWAY			
Kansas:			
Sept. Canada Goose Units	Sept. 6-Sept. 15	3	6
North Dakota	Sept. 1-Sept. 21	5	10
Oklahoma	Sept. 15-Sept. 23	3	6
South Dakota (2):			
West Unit (5)	Sept. 1-Sept. 14	5	10
North Unit	Sept. 1-Sept. 28	5	10
South Unit	Sept. 15-Sept. 28	5	10
PACIFIC FLYWAY			
California:			
Humboldt County	Sept. 1-Sept. 9	2	2
Idaho			
Nez Perce County (1)(2)	Sept. 8-Sept. 14	4	8
Oregon:			
Northwest Zone	Sept. 8-Sept. 20	5	10
Southwest Zone	Sept. 8-Sept. 14	5	10
East Zone	Sept. 8-Sept. 14	5	10
Washington:			
Mgmt. Area 2B	Sept. 1-Sept. 15	5	10
Mgmt. Areas 1 & 3	Sept. 8-Sept. 13	5	10
Rest of State	Sept. 8-Sept. 13	3	6
Wyoming (1)	Sept. 1-Sept. 7	3	6 per season

(1) State permit required.

(2) See State regulations for additional information.

(3) In North Carolina, in Currituck and Dare Counties, the daily bag and possession limits are 2 and 4, respectively.

(4) In Mississippi, the season is closed on Roebuck Lake in Leflore County.

(5) The West Unit includes Brown, Campbell, Edmunds, Faulk, McPherson, Spink, and Walworth Counties.

(e) Regular Goose Seasons.

Note: Bag and possession limits will conform to those set for the regular season.

	Season Dates
MISSISSIPPI FLYWAY	
Michigan (1)	
Canada:	
MVP Zone	Sept. 17-Oct. 3
SJBP Zone	Sept. 17-Oct. 7 & Dec. 15-Dec. 23
White-fronted and Brant	Sept. 17-Dec. 2
Light geese	Sept. 17-Dec. 2
Wisconsin	
Horicon Zone	Sept. 17-Sept. 30
Collins Zone	Sept. 17-Sept. 30

(1) In Michigan, season dates for the Muskegon Wastewater, Saginaw County, Allegan County, Tuscola/Huron Goose Management Units in the South Zone will be established in the late-season regulatory process.

(f) Youth Waterfowl Hunting Days

The following seasons are open only to youth hunters. Youth Hunters must be accompanied into the field by an adult at least 18 years of age. This adult can not duck hunt but may participate in other open seasons.

Definitions

Youth Hunters: Includes youths 15 years of age or younger.

The Atlantic Flyway: Includes Connecticut, Delaware, Florida, Georgia, Maine, Maryland, Massachusetts, New Hampshire, New Jersey, New York, North Carolina, Pennsylvania, Rhode Island, South Carolina, Vermont, Virginia, and West Virginia.

The Mississippi Flyway: Includes Alabama, Arkansas, Illinois, Indiana, Iowa, Kentucky, Louisiana, Michigan, Minnesota, Mississippi, Missouri, Ohio, Tennessee, and Wisconsin.

The Central Flyway: Includes Colorado (east of the Continental Divide), Kansas, Montana (Blaine, Carbon, Fergus, Judith Basin, Stillwater, Sweetgrass, Wheatland, and all counties east thereof), Nebraska, New Mexico (east of the Continental Divide except that the Jicarilla Apache Indian Reservation is in the Pacific Flyway), North Dakota, Oklahoma, South Dakota, Texas, and Wyoming (east of the Continental Divide).

The Pacific Flyway: Includes the States of Arizona, California, Colorado (west of the Continental Divide), Idaho Montana (including and to the west of Hill, Chouteau, Cascade, Meagher, and Park Counties), Nevada, New Mexico (the Jicarilla Apache Indian Reservation and west of the Continental Divide), Oregon, Utah, Washington and Wyoming (west of the Continental Divide including the Great Divide Basin).

Note: Bag and possession limits will conform to those set for the regular season.

	Season Dates
ATLANTIC FLYWAY	
Connecticut	Deferred
Delaware	
Ducks, geese, and coots	Oct. 20
Florida	Deferred
Georgia	
Ducks, geese, mergansers, coots, moorhens and gallinules	Nov. 10 & 11
Maine	
Ducks, mergansers, and coots	Sept. 22
Maryland (1)	
Ducks, mergansers, coots, and Canada geese	Sept. 29
Massachusetts	Deferred
New Hampshire	
Ducks, geese, mergansers, and coots	Sept. 22 & 23
New Jersey	
Ducks, geese, mergansers, coots, moorhens and gallinules	Sept. 22
New York	
Ducks, mergansers, coots, and Canada geese (2)	
Long Island Zone	Deferred
Lake Champlain Zone	Sept. 22 & 23
Northeastern Zone	Sept. 29 & 30
Southeastern Zone	Sept. 29 & 30
Western Zone	Deferred
North Carolina	Deferred
Pennsylvania	
Ducks, mergansers, coots and moorhens	Sept. 22
Rhode Island	
Ducks, mergansers and coots	Nov. 3 & 4
South Carolina	Deferred

	Season Dates
Vermont	
Ducks, mergansers and coots	Sept. 22 & 23
Virginia	Deferred
West Virginia (3)	
Ducks, geese, mergansers, coots, moorhens, and gallinules	Sept. 22 & 23
MISSISSIPPI FLYWAY	
Alabama	
Ducks, mergansers, coots, geese, moorhens and gallinules	Feb. 9 & 10
Arkansas	Deferred
Illinois	Deferred
Indiana	Deferred
Iowa	
Ducks, geese, mergansers and coots	Oct. 6 & 7
Kentucky	
Ducks, geese, mergansers, coots, moorhens, and gallinules	
East Zone	Oct. 13 & 14
West Zone	Feb. 2 & 3
Louisiana	Deferred
Michigan	
Ducks, geese, mergansers, coots, moorhens and gallinules	Sept. 15 & 16
Minnesota (4)	
Ducks, geese, mergansers, coots, moorhens and gallinules	Sept. 15
Mississippi	Deferred
Missouri	Deferred
Ohio	Deferred
Tennessee	Deferred

	Season Dates
Wisconsin	
Ducks, geese, mergansers, coots, moorhens and gallinules	Sept. 15 & 16
CENTRAL FLYWAY	
Colorado	
Ducks, dark geese, mergansers and coots	Sept. 22 & 23
Kansas (5)	
Ducks, dark geese, mergansers and coots	
High Plains	Sept. 29 & 30
Low Plains	
Early Zone	Deferred
Late Zone	Deferred
Montana	
Ducks, geese, mergansers and coots	Sept. 22 & 23
Nebraska (6)	
Ducks, mergansers, coots, and geese	Sept. 22 & 23
New Mexico	
Ducks, mergansers, and coots	
North Zone	Sept. 29 & 30
South Zone	Oct. 13 & 14
North Dakota	
Ducks, geese, mergansers and coots	Sept. 22 & 23
Oklahoma	
Ducks, geese, mergansers, coots	
High Plains	Sept. 29 & 30
Low Plains	Deferred
South Dakota (7)	
Ducks, Canada geese, mergansers, and coots	Sept. 22 & 23
Texas	Deferred
Wyoming	
Ducks, geese, mergansers and coots	Sept. 22

	Season Dates
PACIFIC FLYWAY	
Arizona	
Ducks, geese, mergansers, coots, moorhens and gallinules	
North Zone	Oct. 6
South Zone	Jan. 26
California	
Ducks, geese, mergansers, coots, moorhens and gallinules	
Northeastern Zone	Sept. 29 & 30
Colorado River Zone	Jan. 26
Southern Zone	Jan. 26 & 27
Southern San Joaquin Valley Zone	Jan. 26 & 27
Balance-of-State Zone	Jan. 26 & 27
Colorado	
Ducks, dark geese, mergansers, coots, moorhens and gallinules	Sept. 22 & 23
Idaho	
Ducks, Canada geese, mergansers, coots, moorhens and gallinules	Sept. 22 & 23
Montana	
Ducks, geese, mergansers, coots, moorhens and gallinules	Sept. 22 & 23
Nevada	
Ducks, geese, mergansers, coots, moorhens and gallinules	
Clark and Lincoln Counties	Jan. 26 & 27
Rest of State	Sept. 29
Oregon (8)	
Ducks, Canada geese, mergansers, coots, moorhens and gallinules	Sept. 22 & 23
Utah	
Ducks, geese, mergansers, coots, moorhens and gallinules	Sept. 29
Washington	
Ducks, Canada geese, mergansers, coots, moorhens and gallinules	Sept. 22 & 23
Wyoming	
Ducks, dark geese, mergansers, coots, moorhens and gallinules	Sept. 22

(1) In Maryland, the accompanying adult must be at least 21 years of age and possess a valid Maryland hunting license (or be exempt from the license requirement). This accompanying adult may not shoot or possess a firearm.

(2) In New York, the daily bag limit for Canada geese is 2.

(3) In West Virginia, the accompanying adult must be at least 21 years of age.

(4) In Minnesota, the Canada goose limit is 1, except that in the West Goose Zone, the limit is 5.

(5) In Kansas, the adult accompanying the youth must possess any licenses and/or stamps required by law for that individual to hunt waterfowl.

(6) In Nebraska, see State regulations for additional information on the daily bag limit.

(7) In South Dakota, the limit for Canada geese is 3, except in areas where the Special Early Canada goose season is open. In those areas, the limit is the same as for that special season.

(8) In Oregon, the Canada goose season is closed for the youth hunt in Western Washington Goose Management Area 2.

7. Section 20.106 is revised to read as follows:

§20.106 Seasons, limits, and shooting hours for sandhill cranes.

Subject to the applicable provisions of the preceding sections of this part, areas open to hunting, respective open seasons (dates inclusive), shooting and hawking hours, and daily bag and possession limits on the species designated in this section are as follows:

Shooting and Hawking hours are one-half hour before sunrise until sunset, except as otherwise noted. Area descriptions were published in the August 21, 2001, Federal Register (66 FR 44010).

CHECK STATE REGULATIONS FOR AREA DESCRIPTIONS AND ANY ADDITIONAL RESTRICTIONS.

Note: States with deferred seasons may select those seasons at the same time they select waterfowl seasons in August. Consult late-season regulations for further information.

	Season Dates	Limits Bag	Limits Possession
CENTRAL FLYWAY			
Colorado (1)	Oct. 7-Dec. 3	3	6
Kansas (2)	Nov. 3-Dec. 30	2	4
Montana			
Regular Season Area (1)	Sept. 29-Nov. 25	3	6
Special Season Area (3)	Sept. 8-Sept. 16	1 per season	
New Mexico			
Regular Season Area (1)	Oct. 31-Jan. 31	3	6
Middle Rio Grande Valley Area (3)(4)(5)	Oct. 27-Oct. 28 &	2	3
	Nov. 17-Nov. 18 &	2	3
	Dec. 8-Dec. 9 &	2	3
	Jan. 12-Jan. 13	2	3
Southwest Area (3)(4)(5)	Nov. 3-Nov. 4 &	2	4
	Jan. 5-Jan. 6	2	4
Estancia Valley (3)	Oct. 27-Oct. 28	2	4
North Dakota (2)			
Area 1	Sept. 15-Nov. 11	3	6
Area 2	Sept. 15-Oct. 21	2	4
Oklahoma (1)	Deferred	--	--
South Dakota (1)	Sept. 22-Nov. 18	3	6
Texas (1)			
Zone A	Deferred	--	--
Zone B	Deferred	--	--
Zone C	Deferred	--	--
Wyoming			
Regular Season Area (1)	Sept. 15-Nov. 11	3	6
Riverton-Boysen Unit (3)	Sept. 15-Oct. 5	1 per season	
Big Horn and Park Counties (3)	Sept. 15-Sept. 30	1 per season	
PACIFIC FLYWAY			
Arizona (3)	Nov. 1-Nov. 3 &	2 per season	
	Nov. 5-Nov. 7 &	2 per season	
	Nov. 9-Nov. 11 &	2 per season	
	Nov. 13-Nov. 15 &	2 per season	
	Nov. 17-Nov. 19	2 per season	
Idaho (3)	Sept. 1-Sept. 15	2	9 per season
Montana			
Special Season Area (3)	Sept. 8-Sept. 9 &	1 per season	
	Sept. 15-Sept. 16	1 per season	
Utah (3)			
Rich County	Sept. 1-Sept. 9	1 per season	
Cache County	Sept. 15-Sept. 23	1 per season	
Box Elder County	Sept. 1-Sept. 9	1 per season	

	Season Dates	Limits Bag	Limits Possession
Wyoming (3)			
Bear River Area	Sept. 1-Sept. 14	1 per season	
Salt River Area	Sept. 1-Sept. 7	1 per season	
Eden-Farson Area	Sept. 1-Sept. 7	1 per season	

(1) Each hunter participating in a regular sandhill crane hunting season must obtain and carry in his possession while hunting sandhill cranes a valid Federal sandhill crane hunting permit available without cost from conservation agencies in the States where crane hunting seasons are allowed. The permit must be displayed to any authorized law enforcement official upon request.

(2) In Kansas and North Dakota, each hunter participating in a regular sandhill crane hunting season must obtain and carry in his possession while hunting sandhill cranes a valid Federal sandhill crane hunting permit issued and validated by the State. The permit must be displayed to any authorized law enforcement official upon request.

(3) Hunting is by State permit only.

(4) In New Mexico, the seasonal bag limit is 3 in the Middle Rio Grande Valley Area and 8 in the Southwest Area.

(5) Shooting hours are sunrise to sunset.

8. Section 20.109 is revised to read as follows:

§20.109 Extended seasons, limits, and hours for taking migratory game birds by falconry.

Subject to the applicable provisions of the preceding sections of this part, areas open to hunting, respective open seasons (dates inclusive), hawking hours, and daily bag and possession limits for the species designated in this section are prescribed as follows:

Hawking hours are one-half hour before sunrise until sunset except as otherwise noted. Area descriptions were published in the August 21, 2001, Federal Register (66 FR 44010). For those extended seasons for Ducks, Mergansers, and Coots, area descriptions were published in the September 28, 2000, Federal Register (65 FR 58314) and will be published again in a September 2001 Federal Register.

CHECK STATE REGULATIONS FOR AREA DESCRIPTIONS AND ANY ADDITIONAL RESTRICTIONS.

Daily bag limit . . . . . 3 migratory birds, singly or in the aggregate.

Possession limit . . . . . 6 migratory birds, singly or in the aggregate.

These limits apply to falconry during both regular hunting seasons and extended falconry seasons -- unless further restricted by State regulations. The falconry bag and possession limits are not in addition to regular season limits. Unless otherwise specified, extended falconry for ducks does not include sea ducks within the special sea duck areas. Only extended falconry seasons are shown below. Many States permit falconry during the gun seasons. Please consult State regulations for details.

For ducks, mergansers, coots, geese, and some moorhen seasons; additional season days occurring after September 30 will be published with the late-season selections. Some States have deferred selections. Consult late-season regulations for further information.

	Extended Falconry Dates
ATLANTIC FLYWAY	
Delaware	
Mourning dove	Sept. 24-Oct. 13 & Oct. 29-Nov. 8 & Jan. 28-Feb. 2
Rail	Nov. 10-Dec. 16
Woodcock	Oct. 1-Nov. 8 & Dec. 31-Feb. 6
Snipe	Feb. 2-Mar. 6
Florida	
Mourning and white-winged doves	Oct. 30-Nov. 9 & Nov. 26-Dec. 7 & Jan. 7-Jan. 20
Rails	Nov. 10-Dec. 16
Woodcock	Nov. 24-Dec. 14 & Jan. 14-Mar. 10
Common moorhens	Nov. 10-Dec. 14
Georgia	
Moorhens, gallinules, and sea ducks	Nov. 10-Nov. 16 & Nov. 26-Nov. 30 & Jan. 21-Feb. 15
Maryland	
Mourning doves	Oct. 22-Nov. 12 & Dec. 9-Dec. 17 & Dec. 31-Jan. 5
Rails	Nov. 10-Dec. 16
Woodcock	Oct. 1-Oct. 19 & Jan. 20-Mar. 10

	Extended Falconry Dates
Pennsylvania	
Mourning doves	Oct. 6-Oct. 26 & Nov. 26-Dec. 11
Virginia	
Doves	Sept. 30-Oct. 12 & Dec. 15-Dec. 28 & Jan. 10-Jan. 19
Woodcock	Oct. 29-Nov. 2 & Nov. 18-Dec. 21 & Jan. 6-Jan. 31
MISSISSIPPI FLYWAY	
Illinois	
Mourning doves	Oct. 18-Nov. 2 & Nov. 16-Dec. 16
Rails	Nov. 10-Dec. 16
Woodcock	Sept. 1-Oct. 19 & Dec. 4-Dec. 16
Indiana	
Mourning doves	Oct. 17-Nov. 1 & Jan. 1-Jan. 31
Woodcock	Sept. 22-Oct. 4 & Nov. 19-Jan. 6
Ducks, mergansers, and coots (1) North Zone	Sept. 29-Sept. 30
Michigan	
Rails and snipe	Sept. 7-Sept. 14 & Nov. 15-Dec. 10 & Mar. 1-Mar. 10
Ducks, mergansers, coots, and moorhens (1)	Sept. 7-Sept. 28
Woodcock	Sept. 7-Sept. 21 & Nov. 6-Dec. 10 & Mar. 1-Mar. 10

	Extended Falconry Dates
Minnesota	
Woodcock	Sept. 1-Sept. 21 & Nov. 6-Dec. 16
Rails and snipe	Nov. 5-Dec. 16
Missouri	
Mourning doves	Nov. 10-Dec. 16
Ducks, mergansers, and coots	Sept. 8-Sept. 23
Tennessee	
Mourning doves	Sept. 27-Oct. 12 & Oct. 29-Nov. 27
Ducks (1)	Sept. 13-Sept. 30
Wisconsin	
Rails, snipe, moorhens, and gallinules (1)	Sept. 1-Sept. 28
Woodcock	Sept. 1-Sept. 21
Ducks, mergansers, and coots	Sept. 15-Sept. 16
CENTRAL FLYWAY	
Montana (2)	
Ducks, mergansers, and coots (1)	Sept. 19-Sept. 30
Nebraska	
Ducks, mergansers, and coots	
High Plains	Sept. 8-Sept. 16 & Sept. 22-Sept. 23
Low Plains	Sept. 8-Sept. 28
New Mexico	
Doves	
North Zone	Oct. 31-Nov. 12 & Nov. 27-Dec. 30
South Zone	Oct. 1-Nov. 12 & Nov. 27-Nov. 30
Band-tailed pigeons	
North Zone	Sept. 21-Dec. 16
South Zone	Oct. 21-Jan. 15

	Extended Falconry Dates
New Mexico (cont.)	
Sandhill cranes	
Regular Season Area	Oct. 17-Oct. 30
Ducks and coots	Sept. 15-Sept. 23
Moorhens and sora and Virginia rails	Dec. 15-Jan. 20
North Dakota	
Ducks, mergansers, and coots	Sept. 17-Sept. 28
Snipe	Sept. 1-Sept. 14
South Dakota	
Ducks, mergansers, and coots (1)	
High Plains	Sept. 4-Sept. 11
Low Plains	
North & Middle Zones	Sept. 4-Sept. 21 & Sept. 24-Sept. 28
South Zone	Sept. 11-Sept. 21 & Sept. 24-Sept. 30
Texas	
Mourning and white-winged doves	Nov. 19-Dec. 25
Rails and gallinules	Dec. 20-Jan. 25
Woodcock	Nov. 24-Dec. 17 & Feb. 1-Mar. 10
Wyoming	
Rails	Nov. 10-Dec. 16
Ducks, mergansers, and coots (1)	
Zone 1	Sept. 22-Oct. 1
Zone 2	Sept. 19-Sept. 28
PACIFIC FLYWAY	
Arizona	
Doves	Sept. 14-Oct. 30
Idaho	
Mourning doves	Nov. 1-Jan. 16
New Mexico	
Doves	
North Zone	Oct. 31-Nov. 12 & Nov. 27-Dec. 30
South Zone	Oct. 1-Nov. 12 & Nov. 27-Nov. 30
Band-tailed pigeons	
North Zone	Sept. 21-Dec. 16
South Zone	Oct. 21-Jan. 15
Oregon (3)	
Mourning doves	Oct. 1-Dec. 16
Band-tailed pigeons	Sept. 1-Sept. 14 & Sept. 24-Dec. 16
Utah	
Mourning doves and band-tailed pigeons	Oct. 1-Dec. 16
Washington	
Mourning doves	Oct. 1-Dec. 31
Wyoming	
Rails	Nov. 10-Dec. 16

(1) Additional days occurring after September 30 will be published with the late-season selections.

(2) In Montana, the bag limit is 2 and the possession limit is 6.

(3) In Oregon, no more than 1 pigeon daily in bag or possession.

[FR Doc. 01–21836 Filed 8–28–01; 8:45 am]

BILLING CODE 4310–55–C

Reader Aids

Federal Register

Vol. 66, No. 168

Wednesday, August 29, 2001

CUSTOMER SERVICE AND INFORMATION

Federal Register/Code of Federal Regulations

General Information, indexes and other finding aids	**202–523–5227**
Laws	**523–5227**
Presidential Documents	
Executive orders and proclamations	**523–5227**
The United States Government Manual	**523–5227**
Other Services	
Electronic and on-line services (voice)	**523–4534**
Privacy Act Compilation	**523–3187**
Public Laws Update Service (numbers, dates, etc.)	**523–6641**
TTY for the deaf-and-hard-of-hearing	**523–5229**

ELECTRONIC RESEARCH

World Wide Web

Full text of the daily Federal Register, CFR and other publications:

http://www.access.gpo.gov/nara

Federal Register information and research tools, including Public Inspection List, indexes, and links to GPO Access:

http://www.nara.gov/fedreg

E-mail

PENS (Public Law Electronic Notification Service) is an E-mail service for notification of recently enacted Public Laws. To subscribe, send E-mail to

listserv@listserv.gsa.gov

with the text message:

subscribe PUBLAWS-L your name

Use listserv@www.gsa.gov only to subscribe or unsubscribe to PENS. We cannot respond to specific inquiries.

Reference questions. Send questions and comments about the Federal Register system to:

info@fedreg.nara.gov

The Federal Register staff cannot interpret specific documents or regulations.

FEDERAL REGISTER PAGES AND DATE, AUGUST

39615–40106 1
40107–40572 2
40573–40838 3
40839–41128 6
41129–41438 7
41439–41754 8
41755–42104 9
42105–42412 10
42413–42597 13
42587–42728 14
42729–42928 15
42929–43064 16
43065–43460 17
43461–43760 20
43761–44024 21
44025–44290 22
44291–44520 23
44521–44944 24
44945–45150 27
45151–45562 28
45563–45748 29

CFR PARTS AFFECTED DURING AUGUST

At the end of each month, the Office of the Federal Register publishes separately a List of CFR Sections Affected (LSA), which lists parts and sections affected by documents published since the revision date of each title.

1 CFR

11 44523

3 CFR

Proclamations:
7458 45563
Executive Orders:
12002 (See EO 13222) 44025
12214 (See EO 13222) 44025
12722 (See Notice of July 31, 2001) 40105
12724 (See Notice of July 31, 2001) 40105
12735 (See EO 13222) 44025
12755 (See EO 13222) 44025
12851 (See Eo 13222) 44025
13026 (See EO 13222) 44025
13221 40571
13222 44025
Administrative Orders:
Presidential Determinations:
No. 2001-22 of July 26, 2001 40107
No. 2001-23 of August 9, 2001 44521
Notices:
Notice of July 31, 2001 40105

5 CFR

1605 44276
1606 44276
1650 43461

7 CFR

20 44291
300 45151
301 ..... 40573, 40923, 41439, 43065
319 45151
457 42729
916 39615
917 39615
924 42413
959 39621
989 39623
1744 41755
1755 ..... 43310, 43314
Proposed Rules:
56 42456
58 42458
70 42456
246 40152
319 45637
911 40923
916 39690
944 ..... 40845, 40923
948 ..... 40153, 40155
966 40158
982 44086
993 43534
1205 42464
1219 45188
1230 42469

8 CFR

212 42587
214 42587
245 42587
248 42587
274a 42587
Proposed Rules:
103 41456

9 CFR

54 43964
79 43964
94 42595
95 42595
130 39628
317 40843
381 40843
Proposed Rules:
317 41160
327 ..... 41160, 42472

10 CFR

72 43761
Proposed Rules:
50 40626
72 43810
430 ..... 43123, 45188, 45189

12 CFR

202 41439
205 41439
208 42929
213 41439
220 44525
226 ..... 41439, 43463
230 41439
709 40574
712 40575
721 40845
749 40578
1411 44027
Proposed Rules:
611 43536
614 43536
701 40641
702 40642
741 40642
925 ..... 41462, 43961
930 ..... 41462, 41474, 43961
931 ..... 41462, 43961
932 ..... 41462, 41474, 43961
933 ..... 41462, 43961

14 CFR

23 40580
39 ....39632, 40109, 40582, 40850, 40860, 40863, 40864, 40867, 40869, 40870, 40872, 40874, 40876, 40878, 40880, 40893, 41129, 41440, 41443, 42105, 42586, 42937, 42939, 43066, 43068, 43070, 43072, 43074, 43076, 43463, 43465, 43467, 43471, 43475, 43763, 43766, 43768, 43770, 44027, 44030, 44032, 44034, 44035, 44039, 44041, 44043, 44044, 44046, 44047, 44291, 44293, 44295, 44297, 44945, 44947, 44950, 44954, 44957, 44958, 45565, 45568, 45570, 45572, 45573, 45575, 45577, 45579, 45581, 45584, 45594
71 ....42107, 42108, 43078, 43079, 43080, 44049, 44050, 45162, 45596, 45597, 45598, 45599, 45600, 45601, 45603, 45604
73 45604
91 41088
95 39633
97 ....41772, 41774, 44299, 44301
121 ....41088, 41955, 41959, 44050, 44270
125 44270
135 ....41088, 44050, 44270
145 41088
187 43680

Proposed Rules:

39 ....40161, 40162, 40645, 40646, 40926, 41808, 42970, 43124, 43126, 43128, 43130, 43811, 43814, 43815, 44089, 44093, 44311, 44313, 44316, 44319, 44320, 44321, 44323, 44326, 44553, 44556, 44558, 44550, 44561, 44562, 44988, 44990, 45190, 45192, 45194, 45196, 45648, 45651, 45653, 45655, 45657
71 ....42618, 42619, 43121, 44327, 44993, 44994, 45198, 45199, 45200, 45659, 45660
121 42807
139 42807
217 45201
241 45201
291 45201
298 45201

15 CFR

734 42108
740 42108

Proposed Rules:

801 45219
922 43135

16 CFR

305 40110
1700 40111

Proposed Rules:

314 41162
1500 39692

17 CFR

1 ....41131, 42256
3 43080
5 42256
15 42256
36 42256
37 42256
38 42256
39 45604
40 ....42256, 42289
41 ....42256, 43083, 44490, 44960
100 42256
140 ....43080, 44960
166 42256
170 ....42256, 43080
180 42256
200 ....40885, 43720
202 43721
232 42941
240 ....43721, 44490, 45138
248 45138
249 ....43721, 45138

Proposed Rules:

1 45221
3 45221
4 45221
140 45221
155 45221

18 CFR

Proposed Rules:

2 40929
35 40929
37 40929

19 CFR

Proposed Rules:

12 42163
113 42163
122 40649
123 40649
151 42163
162 42163
177 45235

20 CFR

404 45162
656 40584

Proposed Rules:

404 43136
422 43136

21 CFR

510 43773
520 43773
524 42730
558 45167
606 40886
640 40886
1308 42943
1310 42944

Proposed Rules:

500 42167
874 42809

22 CFR

Ch. XIII 42731
62 43087

24 CFR

300 44258
320 44258
330 44258
350 44258
887 42731

Proposed Rules:

903 42926

25 CFR

151 42415

Proposed Rules:

151 42474
502 41810

26 CFR

1 ....40590, 41133
31 39638
40 41775
301 ....41133, 41778
602 43478

Proposed Rules:

1 ....40659, 41169, 44565
5c 41170
5f 41170
18 41170
301 ....41169, 41170

27 CFR

1 42731
4 42731
5 42731
7 42731
12 42731
17 42735
18 42735
19 ....42731, 42735
20 ....42731, 42735
22 ....42731, 42735
24 ....42731, 42735
25 42735
29 42735
40 ....42731, 43478
44 ....43478, 45613
46 ....43478, 45613
55 42731
70 ....42731, 42735, 43478
71 42731
170 42735
178 ....40596, 42586
179 ....40596, 42586
200 42731
275 ....42731, 45613
290 ....42731, 43478

28 CFR

16 ....41445, 43308

29 CFR

697 44967
4022 42737
4044 42737

30 CFR

42 45167
47 45167
56 45167
57 45167
77 45167
904 42739
914 42743
938 42750
946 43480

Proposed Rules:

250 45236
913 42813
917 42815

31 CFR

357 44526

32 CFR

153 45169
199 ....40601, 45171
311 41779
323 41780
326 41783

Proposed Rules:

199 39699
320 41811
326 43138
505 ....41814, 43818
701 43141
806b 43820

33 CFR

100 ....41137, 41138, 41140, 41141, 41142, 44050
117 ....40116, 40117, 40118, 41144, 42110, 42601, 42602, 44969, 44971
164 42753
165 ....40120, 41784, 41786, 41787, 42602, 42604, 42753, 42755, 42946, 42948, 43088, 43774, 43776, 44302, 44971, 45619

Proposed Rules:

117 42972
157 42170
165 41170
334 ....42475, 42477, 42478

34 CFR

674 44006
682 44006
685 44006

36 CFR

211 43778

Proposed Rules:

242 45082
1228 40166

37 CFR

10 44526
202 40322

Proposed Rules:

201 45241

38 CFR

Ch. I 44052
3 ....44527, 45620
21 42586

Proposed Rules:

3 ....41483, 44095
19 40942
20 40942

39 CFR

20 42112
266 40890

Proposed Rules:

111 ....40663, 41485, 42817, 42820, 45245

40 CFR

9 ....40121, 42122
51 40609
52 ....40137, 40609, 40616, 40891, 40895, 40898, 40901, 41789, 41793, 42123, 42126, 42128, 42133, 42136, 42415, 42418, 42425, 42427, 42605, 42756, 42949, 42956, 43484, 43485, 43488, 43492, 43497, 43502, 43779, 43783, 43788, 43795, 43796, 43797, 44053, 44057, 44303, 44528, 44532,

44538, 44544, 44547, 44973, 44974, 45632
60 .....42425, 42427, 42608, 44978
61.....42425, 42427
62 .....41146, 42425, 42427, 43509
63 .....40121, 40903, 41086, 44218
70.....40901, 42439
72.....42761
81 .....40908, 44060, 44304
96.....40609
97.....40609
180 .....39640, 39648, 39651, 39659, 39666, 39675, 40140, 40141, 41446, 42761, 42765, 42772, 42776, 42957
258.....42441, 44061
261.....41796, 43054
271 .....40911, 42140, 42962, 43798, 44071, 44307
300 .....40912, 42610, 43806, 44073, 45634

Proposed Rules:
9.....41817
52 .....40168, 40664, 40802, 40947, 40947, 40953, 41174, 41486, 41822, 41823, 42172, 42185, 42186, 42187, 42479, 42487, 42488, 42620, 42831, 42974, 43549, 43550, 43552, 43822, 43823, 44096, 44097, 44568, 44571, 44574, 44578, 44580, 44581, 44582, 44995, 44997, 45661
60.....42488, 44997
61.....42488
62 .....41176, 42488, 43552, 44582
63 .....40166, 40324, 41664, 43141, 43142
70 .....40953, 42490, 42496, 45253
81 .....40953, 42187, 44097, 44329
86.....40953
122.....41817
123.....41817
124.....41817
130.....41817
140.....44585
141.....42974
142.....42974
152.....45661
153.....40170
156.....45661
174.....43552
180 .....39705, 39709, 40170
247.....45256
260.....42193
261.....42193, 43823
262.....42193
263.....42193
264.....42193, 43142
265.....42193, 43142
266.....43142
270.....43142
271 .....42193, 42194, 42975, 43143, 43831, 44107, 44329
281.....40954
300 .....40957, 41177, 41179, 42620, 43831
372.....44107
721.....42976, 42978

42 CFR

57.....44981
58.....44981
400.....43090
405.....39828
410.....39828
412.....39828, 41316
413.....39828, 41316
414.....45173
430.....43090
431.....43090
434.....43090
435.....43090
438.....43090
440.....43090
447.....43090
482.....39828
485.....39828
486.....39828

Proposed Rules:
400.....43614
405.....40372
410.....40372
411.....40372
413.....44672
414.....40372
415.....40372
416.....44585
419.....44672
430.....43614
431.....43614
434.....43614
435.....43614
438.....43614
440.....43614
447.....43614
482.....44585
485.....44585
489.....44672

43 CFR

3160.....41149

44 CFR

62.....40916
64.....43091
65.....43095, 44984
67.....42146

Proposed Rules:
67.....41182, 41186
204.....39715

45 CFR

672.....42450
673.....42450

46 CFR

1.....44985
4.....41955, 42964
5.....41955, 42964
16.....41955, 42964
502.....43511

Proposed Rules:
221.....40664

47 CFR

0.....42552
51.....43516
54.....41149
63.....41801
68.....42779, 42780
73 .....39682, 39683, 42612, 44586, 44587, 44588
76.....45177

Proposed Rules:
51.....42499
63.....41823
64.....40666
73 .....39726, 39727, 40174, 40958, 40959, 40960, 41489, 41490, 42621, 42622, 42623, 44588

48 CFR

1822.....41804
1845.....41805
1852.....41805

Proposed Rules:
2.....42922, 44518
7.....44518
8.....44518
16.....44518
17.....42922, 44518
27.....42102
31.....40838
33.....42922
49.....42922
52 .....42102, 42922, 44288
232.....44588
252.....44588

49 CFR

40.....41944, 41955
107.....45177, 45376
110.....45376
130.....45376
171 .....44252, 45177, 45376
172 .....44252, 45177, 45376
173.....45177, 45376
174.....45376
175.....45177, 45376
176.....45177, 45376
177.....45177, 45376
178.....45177, 45376
179.....45177, 45376
180.....45177, 45376
192.....43523
195.....43523
199.....41955
219.....41955, 41969
232.....39683
382.....41955, 43097
541.....40622
571.....42613, 43113
578.....41149
653.....41955, 41996
654.....41955, 41996
655.....41955, 41996

Proposed Rules:
71.....40666
171.....40174
172.....41490
173.....40174
174.....40174
175.....40174
176.....40174
177.....40174
178.....40174
209.....42352
234.....42352
236.....42352
544.....41190
571 .....40174, 42982, 42985
624.....44552

50 CFR

17.....43808
20.....44010, 45730
216.....43442
223.....44549
224.....44549
229.....42780
300.....42154
635 .....40151, 42801, 42805
648 .....41151, 41454, 42156, 43122, 45187
660 .....40918, 41152, 42453, 44552, 44986, 45634
679 .....41455, 41806, 42455, 42969, 43524, 44073, 45635

Proposed Rules:
14.....43554
17 .....40960, 42318, 43145, 45662
20.....42712, 45516
21.....45274
84.....43555
100.....45082
216.....44109
223 .....40176, 42499, 43150
224.....42499
226.....42499
600.....42832
622.....40187
660.....40188
679.....41718, 42833
697.....42832

REMINDERS

The items in this list were editorially compiled as an aid to Federal Register users. Inclusion or exclusion from this list has no legal significance.

RULES GOING INTO EFFECT AUGUST 29, 2001

ENVIRONMENTAL PROTECTION AGENCY

Superfund program:
- National oil and hazardous substances contingency plan—
  - National priorities list update; published 8-29-01

TRANSPORTATION DEPARTMENT

Coast Guard

Ports and waterways safety:
- Gulf of Alaska, Narrow Cape, Kodiak Island, AK; safety zone
  - Correction; published 8-29-01

TRANSPORTATION DEPARTMENT

Federal Aviation Administration

Airworthiness directives:
- Aerospatiale; published 7-25-01
- Dornier; published 7-25-01

VETERANS AFFAIRS DEPARTMENT

Adjudication; pensions, compensation, dependency, etc.:
- Application for benefits; duty to assist; published 8-29-01

COMMENTS DUE NEXT WEEK

AGRICULTURE DEPARTMENT

Agricultural Marketing Service

Limes grown in Florida and imported; comments due by 9-5-01; published 8-6-01

Potatoes (Irish) grown in—
- Colorado; comments due by 9-4-01; published 8-2-01

AGRICULTURE DEPARTMENT

Food and Nutrition Service

Child nutrition programs:
- Women, infants, and children; special supplemental nutrition programs—
  - Vendor management systems; mandatory selection criteria, limitation of vendors, training requirements, high-risk vendors identification criteria, etc.; comments due by 9-4-01; published 8-2-01

COMMERCE DEPARTMENT

National Oceanic and Atmospheric Administration

Endangered and threatened species:
- Gulf of Maine/Bay of Fundy population of harbor porpoise; comments due by 9-4-01; published 8-2-01

Fishery conservation and management:
- Alaska; fisheries of Exclusive Economic Zone—
  - Crab and groundfish; reporting and recordkeeping requirements; comments due by 9-7-01; published 8-8-01

Marine mammals:
- Protected species special exception permits; comments due by 9-4-01; published 7-3-01

COMMERCE DEPARTMENT

Patent and Trademark Office

Patent cases:
- Utility and plant applications; elimination of continued prosecution application practice; comments due by 9-7-01; published 7-9-01

ENVIRONMENTAL PROTECTION AGENCY

Air pollutants, hazardous; national emission standards:
- Pharmaceuticals production; comments due by 9-4-01; published 8-2-01

Air programs:
- Stratospheric ozone protection—
  - Hydrochlorofluorocarbons (HCFCs); production and consumption control; allowance system; comments due by 9-4-01; published 7-20-01

Air programs; approval and promulgation; State plans for designated facilities and pollutants:
- New York; comments due by 9-6-01; published 8-7-01

Air quality implementation plans:
- Interstate ozone transport reduction—
  - Nitrogen Oxides State Implementation Plan Call; electric generating units; seasonal heat input growth rates; response to remands in court cases; comments due by 9-4-01; published 8-3-01

Air quality implementation plans; approval and promulgation; various States:
- California; comments due by 9-4-01; published 8-2-01
- Colorado and Montana; comments due by 9-7-01; published 8-8-01
- Indiana; comments due by 9-4-01; published 8-3-01
- Maryland; comments due by 9-5-01; published 8-6-01
- Michigan; comments due by 9-5-01; published 8-6-01
- Missouri; comments due by 9-5-01; published 8-6-01
- Oregon; comments due by 9-4-01; published 8-3-01
- Pennsylvania; comments due by 9-5-01; published 8-6-01

Air quality planning purposes; designation of areas:
- California; comments due by 9-4-01; published 8-6-01

Hazardous waste:
- Identification and listing—
  - Spent catalysts from dual-purpose petroleum hydroprocessing reactions; comments due by 9-4-01; published 7-5-01

Superfund program:
- National oil and hazardous substances contingency plan—
  - National priorities list update; comments due by 9-5-01; published 8-6-01
  - National priorities list update; comments due by 9-5-01; published 8-6-01
  - National priorities list update; comments due by 9-6-01; published 8-7-01
  - National priorities list update; comments due by 9-6-01; published 8-7-01

FEDERAL COMMUNICATIONS COMMISSION

Common carrier services:
- Satellite communications—
  - Satellite and terrestrial operations; 36.0-43.5 GHz band; spectrum allocation and designation; comments due by 9-4-01; published 7-5-01

Radio stations; table of assignments:
- Texas; comments due by 9-4-01; published 7-24-01
- Texas and Arizona; comments due by 9-4-01; published 7-27-01

FEDERAL HOUSING FINANCE BOARD

Federal home loan bank system:
- Capital requirements; comments due by 9-7-01; published 8-8-01
  - Correction; comments due by 9-7-01; published 8-21-01
- Uninsured credit limits; comments due by 9-7-01; published 8-8-01
  - Correction; comments due by 9-7-01; published 8-21-01

HEALTH AND HUMAN SERVICES DEPARTMENT

Health Care Financing Administration

Medicare and Medicaid:
- Anesthesia services; hospital participation conditions; comments due by 9-4-01; published 7-5-01

HEALTH AND HUMAN SERVICES DEPARTMENT

Protection of human subjects:
- Pregnant women and human fetuses as research subjects and pertaining to human in vitro fertilization; comments due by 9-4-01; published 7-6-01

HOUSING AND URBAN DEVELOPMENT DEPARTMENT

Community facilities:
- Urban empowerment zones and renewal communities; Round III designation; comments due by 9-7-01; published 7-9-01

INTERIOR DEPARTMENT

Fish and Wildlife Service

Endangered and threatened species:
- Critical habitat designations—
  - Oahu elepaio; comments due by 9-5-01; published 8-6-01

Migratory bird hunting:
- Seasons, limits, and shooting hours; establishment, etc.; comments due by 9-7-01; published 8-28-01

JUSTICE DEPARTMENT
National Instant Criminal Background Check System:
Law-abiding firearms purchasers' legitimate privacy interests and DOJ's obligation to enforce laws preventing prohibited firearms purchases; balance; comments due by 9-4-01; published 7-6-01

LABOR DEPARTMENT
Occupational Safety and Health Administration
Occupational injuries and illnesses; recording and reporting requirements
Effective date delay; comment request; comments due by 9-4-01; published 7-3-01

POSTAL SERVICE
Domestic Mail Manual:
5% error limit for sequenced mailings; revision; comments due by 9-7-01; published 8-8-01

SECURITIES AND EXCHANGE COMMISSION
Securities:
Broker and dealer definitions; bank, savings association, and savings bank exemptions; comments due by 9-4-01; published 7-24-01
National securities exchanges; registration (Form 1-N); comments due by 9-4-01; published 8-20-01

TRANSPORTATION DEPARTMENT
Coast Guard
Ports and waterways safety:
Puget Sound and Strait of Juan De Fuca, WA; Naval Submarine Base Bangor and submarines; security zones; comments due by 9-7-01; published 7-9-01
Vessel documentation and measurement:
Lease-financing for vessels engaged in coastwise trade; comments due by 9-4-01; published 6-29-01

TRANSPORTATION DEPARTMENT
Federal Aviation Administration
Airworthiness directives:
Airbus; comments due by 9-4-01; published 8-3-01
Boeing; comments due by 9-6-01; published 7-23-01
Bombardier; comments due by 9-5-01; published 8-6-01
Fokker; comments due by 9-4-01; published 8-3-01
Israel Aircraft Industries, Ltd.; comments due by 9-5-01; published 8-6-01
McDonnell Douglas; comments due by 9-6-01; published 7-23-01
Rockwell Collins, Inc.; comments due by 9-7-01; published 7-31-01
Class E airspace; comments due by 9-6-01; published 7-23-01

TRANSPORTATION DEPARTMENT
National Highway Traffic Safety Administration
Motor vehicle safety standards:
Defective or non-compliant tires; sale or lease; reporting requirement; comments due by 9-6-01; published 7-23-01
Tire pressure monitoring systems; controls and displays; comments due by 9-6-01; published 7-26-01

VETERANS AFFAIRS DEPARTMENT
Board of Veterans Appeals:
Appeals regulations and rules of practice—
Evidence gathering and curing procedural defects without remanding; comments due by 9-5-01; published 8-6-01

LIST OF PUBLIC LAWS

This is a continuing list of public bills from the current session of Congress which have become Federal laws. It may be used in conjunction with "P L U S" (Public Laws Update Service) on 202–523–6641. This list is also available online at http://www.nara.gov/fedreg.

The text of laws is not published in the **Federal Register** but may be ordered in "slip law" (individual pamphlet) form from the Superintendent of Documents, U.S. Government Printing Office, Washington, DC 20402 (phone, 202–512–1808). The text will also be made available on the Internet from GPO Access at http://www.access.gpo.gov/nara/index.html. Some laws may not yet be available.

H.R. 93/P.L. 107–27
Federal Firefighters Retirement Age Fairness Act (Aug. 20, 2001; 115 Stat. 207)

H.R. 271/P.L. 107–28
To direct the Secretary of the Interior to convey a former Bureau of Land Management administrative site to the city of Carson City, Nevada, for use as a senior center. (Aug. 20, 2001; 115 Stat. 208)

H.R. 364/P.L. 107–29
To designate the facility of the United States Postal Service located at 5927 Southwest 70th Street in Miami, Florida, as the "Marjory Williams Scrivens Post Office". (Aug. 20, 2001; 115 Stat. 209)

H.R. 427/P.L. 107–30
To provide further protections for the watershed of the Little Sandy River as part of the Bull Run Watershed Management Unit, Oregon, and for other purposes. (Aug. 20, 2001; 115 Stat. 210)

H.R. 558/P.L. 107–31
To designate the Federal building and United States courthouse located at 504 West Hamilton Street in Allentown, Pennsylvania, as the "Edward N. Cahn Federal Building and United States Courthouse". (Aug. 20, 2001; 115 Stat. 213)

H.R. 821/P.L. 107–32
To designate the facility of the United States Postal Service located at 1030 South Church Street in Asheboro, North Carolina, as the "W. Joe Trogdon Post Office Building". (Aug. 20, 2001; 115 Stat. 214)

H.R. 988/P.L. 107–33
To designate the United States courthouse located at 40 Centre Street in New York, New York, as the "Thurgood Marshall United States Courthouse". (Aug. 20, 2001; 115 Stat. 215)

H.R. 1183/P.L. 107–34

To designate the facility of the United States Postal Service located at 113 South Main Street in Sylvania, Georgia, as the "G. Elliot Hagan Post Office Building". (Aug. 20, 2001; 115 Stat. 216)

H.R. 1753/P.L. 107–35

To designate the facility of the United States Postal Service located at 419 Rutherford Avenue, N.E., in Roanoke, Virginia, as the "M. Caldwell Butler Post Office Building". (Aug. 20, 2001; 115 Stat. 217)

H.R. 2043/P.L. 107–36

To designate the facility of the United States Postal Service located at 2719 South Webster Street in Kokomo, Indiana, as the "Elwood Haynes 'Bud' Hillis Post Office Building". (Aug. 20, 2001; 115 Stat. 218)

Last List August 21, 2001

Public Laws Electronic Notification Service (PENS)

PENS is a free electronic mail notification service of newly enacted public laws. To subscribe, go to http://hydra.gsa.gov/archives/publaws-l.html or send E-mail to **listserv@listserv.gsa.gov** with the following text message:

SUBSCRIBE PUBLAWS-L
Your Name.

Note: This service is strictly for E-mail notification of new laws. The text of laws is not available through this service. **PENS** cannot respond to specific inquiries sent to this address.