AUTHENTICATED
U.S. GOVERNMENT
INFORMATION
GPO

Federal Register

12–13–01 Thursday
Vol. 66 No. 240 Dec. 13, 2001
Pages 64349–64734

The **FEDERAL REGISTER** is published daily, Monday through Friday, except official holidays, by the Office of the Federal Register, National Archives and Records Administration, Washington, DC 20408, under the Federal Register Act (44 U.S.C. Ch. 15) and the regulations of the Administrative Committee of the Federal Register (1 CFR Ch. I). The Superintendent of Documents, U.S. Government Printing Office, Washington, DC 20402 is the exclusive distributor of the official edition.

The **Federal Register** provides a uniform system for making available to the public regulations and legal notices issued by Federal agencies. These include Presidential proclamations and Executive Orders, Federal agency documents having general applicability and legal effect, documents required to be published by act of Congress, and other Federal agency documents of public interest.

Documents are on file for public inspection in the Office of the Federal Register the day before they are published, unless the issuing agency requests earlier filing. For a list of documents currently on file for public inspection, see http://www.nara.gov/fedreg.

The seal of the National Archives and Records Administration authenticates the Federal Register as the official serial publication established under the Federal Register Act. Under 44 U.S.C. 1507, the contents of the **Federal Register** shall be judicially noticed.

The **Federal Register** is published in paper and on 24x microfiche. It is also available online at no charge as one of the databases on GPO Access, a service of the U.S. Government Printing Office.

The online edition of the **Federal Register** is issued under the authority of the Administrative Committee of the Federal Register as the official legal equivalent of the paper and microfiche editions (44 U.S.C. 4101 and 1 CFR 5.10). It is updated by 6 a.m. each day the **Federal Register** is published and it includes both text and graphics from Volume 59, Number 1 (January 2, 1994) forward.

GPO Access users can choose to retrieve online **Federal Register** documents as TEXT (ASCII text, graphics omitted), PDF (Adobe Portable Document Format, including full text and all graphics), or SUMMARY (abbreviated text) files. Users should carefully check retrieved material to ensure that documents were properly downloaded.

On the World Wide Web, connect to the **Federal Register** at http://www.access.gpo.gov/nara. Those without World Wide Web access can also connect with a local WAIS client, by Telnet to swais.access.gpo.gov, or by dialing (202) 512-1661 with a computer and modem. When using Telnet or modem, type swais, then log in as guest with no password.

For more information about GPO Access, contact the GPO Access User Support Team by E-mail at gpoaccess@gpo.gov; by fax at (202) 512–1262; or call (202) 512–1530 or 1–888–293–6498 (toll free) between 7 a.m. and 5 p.m. Eastern time, Monday–Friday, except Federal holidays.

The annual subscription price for the **Federal Register** paper edition is $699, or $764 for a combined **Federal Register, Federal Register** Index and List of CFR Sections Affected (LSA) subscription; the microfiche edition of the **Federal Register** including the **Federal Register** Index and LSA is $264. Six month subscriptions are available for one-half the annual rate. The charge for individual copies in paper form is $10.00 for each issue, or $10.00 for each group of pages as actually bound; or $2.00 for each issue in microfiche form. All prices include regular domestic postage and handling. International customers please add 25% for foreign handling. Remit check or money order, made payable to the Superintendent of Documents, or charge to your GPO Deposit Account, VISA, MasterCard or Discover. Mail to: New Orders, Superintendent of Documents, P.O. Box 371954, Pittsburgh, PA 15250–7954.

There are no restrictions on the republication of material appearing in the **Federal Register.**

How To Cite This Publication: Use the volume number and the page number. Example: 66 FR 12345.

SUBSCRIPTIONS AND COPIES

PUBLIC	
Subscriptions:	
Paper or fiche	**202–512–1800**
Assistance with public subscriptions	**512–1806**
General online information	**202–512–1530; 1–888–293–6498**
Single copies/back copies:	
Paper or fiche	**512–1800**
Assistance with public single copies	**512–1803**
FEDERAL AGENCIES	
Subscriptions:	
Paper or fiche	**523–5243**
Assistance with Federal agency subscriptions	**523–5243**

What's NEW!

Federal Register Table of Contents via e-mail

Subscribe to FEDREGTOC, to receive the **Federal Register** Table of Contents in your e-mail every day.

If you get the HTML version, you can click directly to any document in the issue.

To subscribe, go to **http://listserv.access.gpo.gov** and select:

Online mailing list archives
FEDREGTOC-L
Join or leave the list

Then follow the instructions.

Printed on recycled paper.

Contents

Federal Register

Vol. 66, No. 240

Thursday, December 13, 2001

Agriculture Department
See Forest Service

Centers for Disease Control and Prevention
NOTICES
Agency information collection activities:
Submission for OMB review; comment request, 64433–64437
30763

Children and Families Administration
NOTICES
Grants and cooperative agreements; availability, etc.:
Family Violence Prevention and Services Program, 64437–64449

Civil Rights Commission
NOTICES
Meetings:
Environmental justice; hearing, 64397

Commerce Department
See International Trade Administration
See National Oceanic and Atmospheric Administration
NOTICES
Agency information collection activities:
Submission for OMB review; comment request, 64397–64398

Commodity Futures Trading Commission
PROPOSED RULES
Security futures products:
Large trader reports; reporting levels, 64383–64385
NOTICES
Meetings; Sunshine Act, 64403–64404

Corporation for National and Community Service
NOTICES
Agency information collection activities:
Proposed collection; comment request, 64404–64405

Defense Department
See Navy Department

Drug Enforcement Administration
NOTICES
Schedules of controlled substances; production quotas:
Schedules I and II—
2002 aggregate, 64456–64459

Education Department
NOTICES
Agency information collection activities:
Proposed collection; comment request, 64406

Energy Department
See Federal Energy Regulatory Commission
NOTICES
Environmental statements; availability, etc.:
Oak Ridge Reservation, TN; transportation of low-level radioactive waste to off-site treatment or disposal facilities, 64406–64407

Environmental Protection Agency
RULES
Superfund program:
National oil and hazardous substances contingency plan—
National priorities list update, 64357–64358
PROPOSED RULES
Superfund program:
National oil and hazardous substances contingency plan—
National priorities list update, 64387–64391

Executive Office of the President
See Presidential Documents

Federal Aviation Administration
RULES
Airworthiness standards:
Special conditions—
Canadair Model CL-600-2A12 airplanes, 64349–64351

Federal Deposit Insurance Corporation
NOTICES
Meetings; Sunshine Act, 64416

Federal Emergency Management Agency
NOTICES
Reports and guidance documents; availability, etc.:
Portable (hand-held) radiological instruments; use, 64416–64417

Federal Energy Regulatory Commission
NOTICES
Environmental statements; availability, etc.:
Georgia Strait Crossing Pipeline LP, 64413–64414
Hydroelectric applications, 64414–64415
Practice and procedure:
Off-the-record communications, 64415–64416
Applications, hearings, determinations, etc.:
International Transmission Co. et al., 64407
Midwest Independent Transmission System Operator, Inc., 64408
Nevada Power Co., 64408
Nevada Power Co. et al., 64408–64409
Niagara Mohawk Power Corp. Operator Corp., 64409
NSTAR Electric & Gas Corp., 64409–64410
Texas Eastern Transmission, LP, 64410–64411
Texas Gas Transmission Corp., 64411–64412
Williston Basin Interstate Pipeline Co., 64412–64413

Federal Maritime Commission
NOTICES
Agreements filed, etc., 64417
Ocean transportation intermediary licenses:
Global Kwon Yoon et al., 64417–64418

Federal Railroad Administration
NOTICES
Exemption petitions, etc.:
Union Pacific Railroad; hearing, 64492–64493

Federal Reserve System
PROPOSED RULES
Truth in lending (Regulation Z):
Official staff commentary; amendments, 64381–64383
NOTICES
Banks and bank holding companies:
Change in bank control, 64418
Formations, acquisitions, and mergers, 64418–64419
Permissible nonbanking activities, 64419
Reports and guidance documents; availability, etc.:
Payments system risk; policy statements—
Foreign banking organizations; daylight overdraft capacity; modifications, 64419–64433

Fish and Wildlife Service
NOTICES
Environmental statements; availability, etc.:
Recovery plans—
Multi-island plants (Hawaiian Islands, Maui Nui group), 64451–64452

Food and Drug Administration
NOTICES
Food additive petitions:
Ciba Specialty Chemicals Corp.; withdrawn, 64450
Reports and guidance documents; availability, etc.:
Veterinary Medicinal Products, International Cooperation on Harmonisation of Technical Requirements for Registration—
Veterinary medicinal products; pharmacovigilance; periodic summary update reports management; comment request, 64450–64451

Forest Service
NOTICES
Meetings:
Eastern Washington Cascades Provincial Advisory Committee et al., 64397

Health and Human Services Department
See Centers for Disease Control and Prevention
See Children and Families Administration
See Food and Drug Administration

Indian Affairs Bureau
NOTICES
Agency information collection activities:
Submission for OMB review; comment request, 64452–64453

Interior Department
See Fish and Wildlife Service
See Indian Affairs Bureau
See Land Management Bureau
See Reclamation Bureau

Internal Revenue Service
RULES
Procedure and administration:
Returns and return information disclosure by other agencies, 64351–64353
PROPOSED RULES
Income taxes:
Corporate reorganizations involving disregarded entities; withdrawn
Correction, 64385–64386
Procedure and administration:
Returns and return information disclosure by other agencies; cross-reference, 64386–64387

International Trade Administration
NOTICES
Countervailing duties:
Pasta from—
Turkey, 64398–64399
Grants and cooperative agreements; availability, etc.:
New Independent States; Special American Business Internship Training Program, 64399–64402

Justice Department
See Drug Enforcement Administration
See Parole Commission

Labor Department
See Pension and Welfare Benefits Administration

Land Management Bureau
NOTICES
Realty actions; sales, leases, etc.:
Alaska, 64453–64454

National Aeronautics and Space Administration
PROPOSED RULES
Acquisition regulations:
Safety and health, 64391–64392

National Highway Traffic Safety Administration
RULES
Anthropomorphic test devices:
Occupant crash protection—-
Hybrid III test dummies; 3-year-old child dummy; design and performance specifications, 64368–64377
Motor vehicle safety standards:
School bus body joint strength, 64358–64367

National Oceanic and Atmospheric Administration
RULES
Fishery conservation and management:
Alaska; fisheries of Exclusive Economic Zone—
Pacific cod, 64380
Atlantic highly migratory species—
Pelagic longline fishery; sea turtle protection measures, 64378–64379
Whaling provisions:
Aboriginal subsistence whaling quotas, 64378
PROPOSED RULES
Fishery conservation and management:
Northeastern United States fisheries—
Summer flounder, scup, and black sea bass, 64392–64396
NOTICES
Coastal zone management programs and estuarine sanctuaries:
State programs—
Intent to evaluate performance, 64402
Reports and guidance documents; availability, etc.:
Harbor porpoise bycatch estimates (2000 CY), 64403

Navy Department
NOTICES
Ships available for donation:
Harbor tug ex-HOGA, 64405–64406

Nuclear Regulatory Commission
NOTICES
Environmental statements; availability, etc.:
Entergy Operations, Inc., 64480–64481

Parole Commission
NOTICES
Meetings; Sunshine Act, 64459

Pension and Welfare Benefits Administration
NOTICES
Employee benefit plans; prohibited transaction exemptions:
Rockford Corp. et al., 64459–64480

Postal Service
RULES
International Mail Manual:
Postal rates; changes, 64353–64357

Presidential Documents
PROCLAMATIONS
Jordan; free trade agreement (Proc. 7512), 64495–64734

Public Health Service
See Centers for Disease Control and Prevention
See Food and Drug Administration

Reclamation Bureau
NOTICES
Agency information collection activities:
Proposed collection; comment request, 64454
Environmental statements; notice of intent:
Tualatin River Basin, Portland, OR; water supply feasibility study, 64454–64456

Securities and Exchange Commission
NOTICES
Investment Company Act of 1940:
Shares substitution applications—
Nationwide Life Insurance Co. et al., 64481–64485
United Investors Life Insurance Co. et al., 64485–64489
Self-regulatory organizations; proposed rule changes:
National Association of Securities Dealers, Inc., 64490–64491

Surface Transportation Board
NOTICES
Railroad services abandonment:
Norfolk Southern Railway Co., 64493

Tennessee Valley Authority
NOTICES
Environmental statements; availability, etc.:
Patton Island bridge and approaches crossing Tennessee River and connecting Florence and Muscle Shoals, AL, 64491–64492

Transportation Department
See Federal Aviation Administration
See Federal Railroad Administration
See National Highway Traffic Safety Administration
See Surface Transportation Board

Treasury Department
See Internal Revenue Service
NOTICES
Agency information collection activities:
Submission for OMB review; comment request, 64493–64494

Separate Parts In This Issue

Part II
Executive Office of the President, Presidential Documents, 64495–64734

Reader Aids
Consult the Reader Aids section at the end of this issue for phone numbers, online resources, finding aids, reminders, and notice of recently enacted public laws.

To subscribe to the Federal Register Table of Contents LISTSERV electronic mailing list, go to http://listserv.access.gpo.gov and select Online mailing list archives, FEDREGTOC-L, Join or leave the list (or change settings); then follow the instructions.

CFR PARTS AFFECTED IN THIS ISSUE

A cumulative list of the parts affected this month can be found in the Reader Aids section at the end of this issue.

3 CFR
Proclamations:
7512.....64497

12 CFR
Proposed Rules:
226.....64381

14 CFR
25.....64349

17 CFR
Proposed Rules:
15.....64383

26 CFR
301.....64351
602.....64351
Proposed Rules:
1.....64385
301.....64386
602.....64386

39 CFR
20.....64353

40 CFR
300.....64357
Proposed Rules:
300.....64387

48 CFR
Proposed Rules:
1823.....64391
1836.....64391
1852.....64391

49 CFR
571.....64358
572.....64368

50 CFR
230.....64378
635.....64378
679.....64380
Proposed Rules:
648.....64392

Rules and Regulations

Federal Register
Vol. 66, No. 240
Thursday, December 13, 2001

This section of the FEDERAL REGISTER contains regulatory documents having general applicability and legal effect, most of which are keyed to and codified in the Code of Federal Regulations, which is published under 50 titles pursuant to 44 U.S.C. 1510.

The Code of Federal Regulations is sold by the Superintendent of Documents. Prices of new books are listed in the first FEDERAL REGISTER issue of each week.

DEPARTMENT OF TRANSPORTATION

Federal Aviation Administration

14 CFR Part 25

[Docket No. NM203; Special Conditions No. 25–193–SC]

Special Conditions: Canadair Model CL–600–2A12, High-Intensity Radiated Fields (HIRF)

AGENCY: Federal Aviation Administration (FAA), DOT.

ACTION: Final special conditions; request for comments.

SUMMARY: These special conditions are issued for Canadair Model CL–600–2A12 airplanes modified by Gulfstream Aerospace. These modified airplanes will have a novel or unusual design feature when compared to the state of technology envisioned in the airworthiness standards for transport category airplanes. The modification incorporates the installation of an electronic flight instrument system that performs critical functions. The applicable airworthiness regulations do not contain adequate or appropriate safety standards for the protection of this system from the effects of high-intensity-radiated fields (HIRF). These special conditions contain the additional safety standards that the Administrator considers necessary to establish a level of safety equivalent to that established by the existing airworthiness standards.

DATES: The effective date of these special conditions is November 30, 2001. Comments must be received on or before January 14, 2002.

ADDRESSES: Comments on these special conditions may be mailed in duplicate to: Federal Aviation Administration, Transport Airplane Directorate, Attention: Rules Docket (ANM–113), Docket No. NM203, 1601 Lind Avenue SW., Renton, Washington 98055–4056; or delivered in duplicate to the Transport Airplane Directorate at the above address. All comments must be marked: *Docket No. NM203*. Comments may be inspected in the Rules Docket weekdays, except Federal holidays, between 7:30 a.m. and 4 p.m.

FOR FURTHER INFORMATION CONTACT: Meghan Gordon, FAA, Standardization Branch, ANM–113, Transport Airplane Directorate, Aircraft Certification Service, 1601 Lind Avenue SW., Renton, Washington 98055–4056; telephone (425) 227–2138; facsimile (425) 227–1149.

SUPPLEMENTARY INFORMATION:

Comments Invited

The FAA has determined that good cause exists for making these special conditions effective upon issuance; however, interested persons are invited to submit such written data, views, or arguments, as they may desire. Communications should identify the regulatory docket number and be submitted in duplicate to the address specified above. All communications received on or before the closing date for comments will be considered by the Administrator. These special conditions may be changed in light of the comments received. All comments received will be available in the Rules Docket for examination by interested persons, both before and after the closing date for comments. A report summarizing each substantive public contact with FAA personnel concerning this rulemaking will be filed in the docket. Commenters wishing the FAA to acknowledge receipt of their comments submitted in response to these special conditions must include a self-addressed, stamped postcard on which the following statement is made: ''Comments to Docket No. NM203.'' The postcard will be date stamped and returned to the commenter.

Background

On July 27, 2001, Gulfstream Aerospace, W 6365 Discovery Drive, Appleton, WI, 54914, applied for a Supplemental Type Certificate (STC) to modify Canadair Model CL–600–2A12 airplanes. The Model CL–600–2A12 is a small transport category airplane, powered by two General Electric CF–34–1A engines, with a maximum takeoff weight of 42,100 pounds. This airplane operates with a 2-pilot crew and can hold up to 20 passengers. The modification incorporates the installation of a Collins Electronic Flight Instrument System. The avionics/electronics and electrical systems installed in this airplane have the potential to be vulnerable to high-intensity radiated fields (HIRF) external to the airplane.

Type Certification Basis

Under the provisions of 14 CFR 21.101, Gulfstream Aerospace must show that the Model CL–600–2A12, as changed, continues to meet the applicable provisions of the regulations incorporated by reference in Type Certificate No. A21EA, or the applicable regulations in effect on the date of application for the change. The regulations incorporated by reference in the type certificate are commonly referred to as the ''original type certification basis.'' The regulations included in the certification basis for the Model CL–600–2A12 include 14 CFR part 25, dated February 1, 1965, including amendments 25–1 through 25–37, plus §§ 25.675(a), 25.685(a), 25.733(c), 25.775(e), 25.787(c), 25.815, 25.841(b), 25.951(a), 25.979(d) and (e), 25.1041, 25.1143(e), 25.1303(a), 25.1322, 25.1385(c), 25.1557(b), 25.1583(a), as amended by 25–38; §§ 25.901(b) and (c), 25.903(c) and (e), 25.933(a), 25.943, 25.959, 25.1091(a) and (d), 25.1145(c), 25.1199(b) and (c), 25.1207, 25.1549, 25.1585(a)(9), as amended by 25–40; § 25.1309, as amended by 25–41; § 25.1353(c), as amended by 25–42; §§ 25.571 and 25.629(d)(4) (v), as amended by 25–45; §§ 25.351 and 25.603, as amended by 25–46; and Special Condition 25–ANM–01, dated March 8, 1983.

If the Administrator finds that the applicable airworthiness regulations (that is, part 25, as amended) do not contain adequate or appropriate safety standards for the Model CL–600–2A12 airplanes modified by Gulfstream Aerospace because of a novel or unusual design feature, special conditions are prescribed under the provisions of § 21.16.

In addition to the applicable airworthiness regulations and special conditions, the Model CL–600–2A12 must comply with the fuel vent and exhaust emission requirements of part 34 and the noise certification requirements of part 36.

Special conditions, as defined in § 11.19, are issued in accordance with § 11.38, and become part of the airplane's type certification basis in accordance with § 21.101(b)(2).

Special conditions are initially applicable to the model for which they are issued. Should Gulfstream Aerospace apply at a later date for a supplemental type certificate to modify any other model included on the same type certificate to incorporate the same novel or unusual design feature, these special conditions would also apply to the other model under the provisions of § 21.101(a)(1).

Novel or Unusual Design Features

As noted earlier, the Model CL–600–2A12 airplanes modified by Gulfstream Aerospace will incorporate a Collins Electronic Flight Instrument System that will perform critical functions. This system may be vulnerable to high-intensity radiated fields (HIRF) external to the airplane. The current airworthiness standards of part 25 do not contain adequate or appropriate safety standards for the protection of this equipment from the adverse effects of HIRF. Accordingly, this system is considered to be a novel or unusual design feature.

Discussion

There is no specific regulation that addresses protection requirements for electrical and electronic systems from HIRF. Increased power levels from ground-based radio transmitters and the growing use of sensitive avionics/electronics and electrical systems to command and control airplanes have made it necessary to provide adequate protection.

To ensure that a level of safety is achieved that is equivalent to that intended by the regulations incorporated by reference, special conditions are needed for the Model CL–600–2A12 airplanes modified by Gulfstream Aerospace. These special conditions require that new avionics/electronics and electrical systems that perform critical functions be designed and installed to preclude component damage and interruption of function due to both the direct and indirect effects of HIRF.

High-Intensity Radiated Fields (HIRF)

With the trend toward increased power levels from ground-based transmitters, plus the advent of space and satellite communications coupled with electronic command and control of the airplane, the immunity of critical avionics/electronics and electrical systems to HIRF must be established.

It is not possible to precisely define the HIRF to which the airplane will be exposed in service. There is also uncertainty concerning the effectiveness of airframe shielding for HIRF. Furthermore, coupling of electromagnetic energy to cockpit-installed equipment through the cockpit window apertures is undefined. Based on surveys and analysis of existing HIRF emitters, an adequate level of protection exists when compliance with the HIRF protection special condition is shown with either paragraph 1 or 2 below:

1. A minimum threat of 100 volts rms per meter electric field strength from 10 KHz to 18 GHz.

a. The threat must be applied to the system elements and their associated wiring harnesses without the benefit of airframe shielding.

b. Demonstration of this level of protection is established through system tests and analysis.

2. A threat external to the airframe of the following field strengths for the frequency ranges indicated. Both peak and average field strength components from the Table are to be demonstrated.

Frequency	Field strength (volts per meter)	
	Peak	Average
10 kHz–100 kHz	50	50
100 kHz–500 kHz	50	50
500 kHz–2 MHz	50	50
2 MHz–30 MHz	100	100
30 MHz–70 MHz	50	50
70 MHz–100 MHz	50	50
100 MHz–200 MHz	100	100
200 MHz–400 MHz	100	100
400 MHz–700 MHz	700	50
700 MHz–1 GHz	700	100
1 GHz–2 GHz	2000	200
2 GHz–4 GHz	3000	200
4 GHz–6 GHz	3000	200
6 GHz–8 GHz	1000	200
8 GHz–12 GHz	3000	300
12GHz–18 GHz	2000	200
18 GHz–40 GHz	600	200

The field strengths are expressed in terms of peak of the root-mean-square (rms) over the complete modulation period.

The threat levels identified above are the result of an FAA review of existing studies on the subject of HIRF, in light of the ongoing work of the Electromagnetic Effects Harmonization Working Group of the Aviation Rulemaking Advisory Committee.

Applicability

As discussed above, these special conditions are applicable to Canadair Model CL–600–2A12 airplanes modified by Gulfstream Aerospace. Should Gulfstream Aerospace apply at a later date for a supplemental type certificate to modify any other model included on the same type certificate to incorporate the same novel or unusual design feature, these special conditions would apply to that model as well under the provisions of § 21.101(a)(1).

Conclusion

This action affects only certain novel or unusual design features on Canadair Model CL–600–2A12 airplanes modified by Gulfstream Aerospace. It is not a rule of general applicability and affects only the applicant who applied to the FAA for approval of these features on the airplane.

The substance of these special conditions has been subjected to the notice and comment period in several prior instances and has been derived without substantive change from those previously issued. It is unlikely that prior public comment would result in a significant change from the substance contained herein. For this reason, and because a delay would significantly affect the certification of the airplane, which is imminent, the FAA has determined that prior public notice and comment are unnecessary and impracticable, and good cause exists for adopting these special conditions upon issuance. The FAA is requesting comments to allow interested persons to submit views that may not have been submitted in response to the prior opportunities for comment described above.

List of Subjects in 14 CFR Part 25

Aircraft, Aviation safety, Reporting and recordkeeping requirements.

The authority citation for these special conditions is as follows:

Authority: 49 U.S.C. 106(g), 40113, 44701, 44702, 44704.

The Special Conditions

Accordingly, pursuant to the authority delegated to me by the Administrator, the following special conditions are issued as part of the supplemental type certification basis for Canadair Model CL–600–2A12 airplanes modified by Gulfstream Aerospace.

1. *Protection from Unwanted Effects of High-Intensity Radiated Fields (HIRF).* Each electrical and electronic system that performs critical functions must be designed and installed to ensure that the operation and operational capability of these systems to perform critical functions are not adversely affected when the airplane is exposed to high-intensity radiated fields.

2. For the purpose of these special conditions, the following definition applies: *Critical Functions*: Functions

whose failure would contribute to or cause a failure condition that would prevent the continued safe flight and landing of the airplane.

Issued in Renton, Washington, on November 30, 2001.

Ali Bahrami,

Acting Manager, Transport Airplane Directorate, Aircraft Certification Service.

[FR Doc. 01–30638 Filed 12–12–01; 8:45 am]

BILLING CODE 4910–13–P

DEPARTMENT OF THE TREASURY

Internal Revenue Service

26 CFR Parts 301 and 602

[TD 8968]

RIN 1545–AY78

Disclosure of Returns and Return Information by Other Agencies

AGENCY: Internal Revenue Service (IRS), Treasury.

ACTION: Temporary regulation.

SUMMARY: This temporary regulation relates to the disclosure of returns and return information by Federal, state and local agencies other than the IRS. The temporary regulation permits the IRS to authorize agencies with access to returns and return information under section 6103 of the Internal Revenue Code (Code) to redisclose returns and return information, with the Commissioner's approval, to any authorized recipient set forth in section 6103, subject to the same conditions and restrictions, and for the same purposes, as if the recipient had received the information from the IRS directly.

DATES: This regulation is effective December 13, 2001.

FOR FURTHER INFORMATION CONTACT: Julie C. Schwartz, 202–622–4570 (not a toll-free number).

SUPPLEMENTARY INFORMATION:

Paperwork Reduction Act

These temporary regulations are being issued without prior notice and public procedure pursuant to the Administrative Procedure Act (5 U.S.C. 553). For this reason, the collection of information contained in these regulations has been reviewed and, pending receipt and evaluation of public comments, approved by the Office of Management and Budget under control number 1545–1757. Responses to this collection of information are required if the Commissioner is to authorize the disclosure of returns and return information from agencies with access to returns and return information under section 6103 to other authorized recipients of returns and return information in accordance with section 6103.

An agency may not conduct or sponsor, and a person is not required to respond to, a collection of information unless the collection of information displays a valid OMB control number.

For further information concerning this collection of information, and where to submit comments on the collection of information and the accuracy of the estimated burden, and suggestions for reducing this burden, please refer to the preamble to the cross-referencing notice of proposed rulemaking published in the Proposed Rules section of this issue of the **Federal Register**.

Books or records relating to a collection of information must be retained as long as their contents may become material in the administration of any internal revenue law. Generally, tax returns and return information are confidential, as required by 26 U.S.C. 6103.

Background

Section 6103(p)(2)(B) provides that return information disclosed pursuant to the Code may be disclosed by any mode or means that the Secretary determines necessary or appropriate. 26 CFR section 301.6103(p)(2)(B)–1 currently permits certain recipients of returns and return information under section 6103, with the Commissioner's approval, to disclose returns and return information to certain other permissible recipients under section 6103. Specifically, the existing regulation permits disclosure by Federal agencies, with the Commissioner's approval, to (1) other Federal agencies, (2) state tax agencies, (3) the General Accounting Office, (4) Federal, state and local child support enforcement agencies, (5) persons described in section 6103(c) (person designated in a taxpayer consent), and 6) persons described in section 6103(e) (person with a material interest).

The Consolidated Appropriations Act, 2001, Pub. L. 106–554 (114 Stat. 2763), was signed into law on December 21, 2000. Section 1 of that Act enacted into law H.R. 5662, the Community Renewal Tax Relief Act of 2000. Section 310 of the Community Renewal Tax Relief Act of 2000 added section 6103(j)(6) to the Code, authorizing the Commissioner to disclose return information to the Congressional Budget Office (CBO) for the purpose of, but only to the extent necessary for, long term models of the Social Security and Medicare programs. The conference report, H.R. Conf. Rep. No. 106–1033, at 1020–21 (2000), provides that it is the intent of Congress that all requests for information made by CBO under this provision be made to the Commissioner, who will use his authority under section 6103(p)(2) such that the Social Security Administration (SSA) or other agency can furnish the information directly to CBO for the purpose of CBO's long term models of Social Security and Medicare. SSA, not IRS, collects and maintains much of the information sought by CBO and also receives the tax information CBO seeks under other provisions of section 6103. However, section 301.6103(p)(2)(B)–1 in its current form would not allow the Commissioner to authorize SSA to redisclose return information properly in its possession to CBO, an authorized recipient of the information under section 6103(j)(6). The temporary regulation allows SSA to make return information in its possession available to CBO to the extent authorized by section 6103(j)(6).

There are other situations, similar to that found under section 6103(j)(6), where it is more efficient for returns and return information in the possession of one authorized agency recipient, to be disclosed by such agency to another statutorily authorized recipient. The inability of agencies, including Federal, state and local agencies, to share returns and return information between themselves or even inside a single agency, even where the information is more readily available from an agency other than the IRS, was highlighted by the Department of the Treasury on pages 89–90 of its October 2000 Report to the Congress on the Scope and Use of Taxpayer Confidentiality and Disclosure Provisions. The report notes, for example, that currently a single agency within a state (or even a single caseworker) may be administering both child support under Title IV–D of the Social Security Act and welfare under Title IV–A of the Social Security Act. The agency may receive return information under both section 6103(l)(6) and section 6103(l)(7) to aid the agency in making determinations of eligibility for these programs, but the current regulation does not permit even intra-agency pooling or sharing of these data. The report notes that both intra- and inter-agency data sharing with respect to common data elements could be authorized by amendment to the Treasury regulations. The temporary regulation allows the IRS to authorize redisclosure in appropriate situations.

Explanation of Provisions

The temporary regulation expands the agencies that may redisclose returns and return information if authorized by the Commissioner of Internal Revenue to any Federal, state or local agency that receives information under section 6103. Similarly, it expands the authorized recipients of returns and return information pursuant to this redisclosure authority to any recipient authorized to receive returns and return information in accordance with section 6103. All redisclosures by agencies pursuant to this regulation will be made subject to the same conditions, restrictions, safeguards, recordkeeping requirements, and civil and criminal penalties that would apply if the disclosure were made by the IRS. The reference in the existing regulation excepting redisclosures of return information under section 6103(m) from the recordkeeping requirements has been deleted as unnecessary because section 6103(p)(3) does not require recordkeeping by the IRS of section 6103(m) disclosures. As under the existing regulation, Federal, state and local agencies making disclosures of return information under the temporary regulation will continue to provide to the IRS certain information regarding disclosures made pursuant to this authority, in order for the IRS to fulfill its reporting requirements under section 6103(p).

Special Analyses

It has been determined that this Treasury Decision is not a significant regulatory action as defined in Executive Order 12866. Therefore, a regulatory assessment is not required. It has also been determined that section 553(b) of the Administrative Procedure Act (5 U.S.C. chapter 5) and the Regulatory Flexibility Act (5 U.S.C. chapter 6) do not apply to these regulations, and, therefore, a Regulatory Flexibility Analysis is not required. Pursuant to section 7805(f) of the Internal Revenue Code, these temporary regulations will be submitted to the Chief Counsel of the Small Business Administration for comment on their impact on small businesses.

Drafting Information

The principal author of these regulations is Julie C. Schwartz, Office of the Associate Chief Counsel (Procedure and Administration), Disclosure and Privacy Law Division.

List of Subjects

26 CFR Part 301

Employment taxes, Estate taxes, Excise taxes, Gift taxes, Income taxes, Penalties, Reporting and recordkeeping requirements.

26 CFR Part 602

Reporting and recordkeeping requirements.

Amendments to the Regulations

Accordingly, 26 CFR parts 301 and 602 are amended as follows:

PART 301—PROCEDURE AND ADMINISTRATION

Paragraph 1. The authority citation for part 301 is amended by adding an entry in numerical order to read as follows:

Authority: 26 U.S.C. 7805 * * *
Section 301.6103(p)(2)(B)–1T also issued under 26 U.S.C. 6103(p)(2); * * *

§ 301.6103(p)(2)(B)–1 [Removed]

Par. 2. Section 301.6103(p)(2)(B)–1 is removed.

Par. 3. Section 301.6103(p)(2)(B)–1T is added to read as follows:

§ 301.6103(p)(2)(B)–1T Disclosure of Returns and Return Information by Other Agencies

(a) *General rule.* Subject to the requirements of paragraphs (b), (c), and (d) of this section, returns or return information that have been obtained by a Federal, state or local agency, or its agents or contractors in accordance with section 6103 (the ''first recipient'') may be disclosed by the first recipient to another recipient authorized to receive such returns or return information under section 6103 (the ''second recipient'').

(b) *Approval by Commissioner.* A disclosure described in paragraph (a) of this section may be made if the Commissioner of Internal Revenue (the ''Commissioner'') determines, after receiving a written request under this section, that such returns or return information are more readily available from the first recipient than from the Internal Revenue Service. The disclosure authorization by the Commissioner shall be directed to the head of the first recipient and may contain such conditions or restrictions as the Commissioner may prescribe. The disclosure authorization may be revoked by the Commissioner at any time.

(c) *Requirements and restrictions.* The second recipient may only receive returns or return information as authorized by the provision of section 6103 applicable to such second recipient. Any returns or return information disclosed may only be used by the second recipient for a purpose authorized by and subject to any conditions imposed by section 6103 and the regulations thereunder, including, if applicable, safeguards imposed by section 6103(p)(4).

(d) *Records and reports of disclosure.* The first recipient shall maintain to the satisfaction of the Internal Revenue Service a permanent system of standardized records regarding such disclosure authorization described in paragraph (a) of this section and any disclosure of returns and return information made pursuant to such authorization, and shall provide such information as prescribed by the Commissioner in order to enable the Internal Revenue Service to comply with its obligations under section 6103(p)(3) to keep accountings for disclosures and to make annual reports of disclosures to the Joint Committee on Taxation. The information required for reports to the Joint Committee on Taxation must be provided within 30 days after the close of each calendar year. The requirements of this paragraph do not apply to the disclosure of returns and return information as provided by paragraph (a) of this section which, had such disclosures been made directly by the Service, would not have been subject to the recordkeeping requirements imposed by section 6103(p)(3)(A).

(e) *Effective date.* This section is applicable on December 13, 2001.

PART 602—OMB CONTROL NUMBERS UNDER THE PAPERWORK REDUCTION ACT

Paragraph 4. The authority citation for part 602 continues to read as follows:

Authority: 26 U.S.C. 7805 * * *

Paragraph 5. In § 602.101, paragraph (b) is amended by adding an entry to the table in numerical order to read as follows:

§ 602.101 OMB Control Numbers.

* * * * *

(b) * * *

CFR part or section where identified and described	Current OMB control No.
* * * * *	
301.6103(p)(2)(B)–1T	1545–1757
* * * * *	

Approved: December 4, 2001.

Robert E. Wenzel,

Deputy Commissioner of Internal Revenue.

Mark Weinberger,

Assistant Secretary (Tax Policy), Department of the Treasury.

[FR Doc. 01–30619 Filed 12–12–01; 8:45 am]

BILLING CODE 4830–01–P

POSTAL SERVICE

39 CFR Part 20

International Mail Postal Rates

AGENCY: Postal Service.

ACTION: Final rule.

SUMMARY: The Postal Service, after considering the comments submitted in response to its request published in the **Federal Register** on October 16, 2001 (66 FR 52555–52560), for comments on proposed changes in international postage rates, hereby gives notice that it is implementing the proposed rates.

EFFECTIVE DATE: 12:01 a.m., Sunday, January 13, 2002.

FOR FURTHER INFORMATION CONTACT: Walter J. Grandjean at (703) 292–3579.

SUPPLEMENTARY INFORMATION: On October 16, 2001, the Postal Service published in the **Federal Register** a notice of proposed changes in international postage rates (66 FR 52555–52560). The Postal Service requested comments by November 15, 2001, and by that date received two comments. Both were from the same publisher using the publishers' periodical rates.

Both commenters stated that if the rates were to be implemented in January 2002, not enough time would be allowed to change software, either company specific proprietary or industry-wide software. Both suggested that the rates not be implemented before March 31, 2002, at the earliest. Both stated that implementation concurrent with the domestic rates in R2001–1 would be appropriate. One commenter noted the dramatic increase in some rate cells for items to Mexico and questioned why these rates would be higher than rates to more distant countries.

The Postal Service understands that many mailers will be required to make software changes. The Postal Service itself must make changes. However, the Postal Service believes that it has provided adequate time for mailers to make changes given that notice of the proposed change was given on October 16, 2001.

Rates are based on the cost of providing service to the countries in a rate group. Where there is more than one country in a rate group, the costs are an average. Where there is a single country in a rate group, the rate reflects the cost of providing service to that country. The publishers' periodical rates to Mexico are currently higher than the rates to Canada and all other countries. Separating the rates for all other countries into three rate groups does not alter the costs of providing service to Mexico. It should be noted that while the first two weight increments for Mexico increased by 25 percent, this is a smaller increase than the increases for the same weight increments for rate groups 3, 4, and 5. The rate increase for Mexico is not out of line with the overall increase to other countries.

After reviewing and considering the comments received, the Postal Service adopts the following postage rates and amends the *International Mail Manual* (IMM), which is incorporated by reference in the *Code of Federal Regulations*. See 39 CFR 20.1.

List of Subjects in 39 CFR Part 20

Foreign relations, International postal services.

PART 20—[AMENDED]

1. The authority citation for 39 CFR part 20 continues to read as follows:

Authority: 5 U.S.C. 552(a); 39 U.S.C. 401, 404, 407, 408.

2. The *International Mail Manual* (IMM) is amended to incorporate the following postage rates:

INTERNATIONAL PRIORITY AIRMAIL RATES

Rate group	Per piece rate	Drop shipment per pound	Full service per pound
1 (Canada)	$0.28	$2.60	$3.60
2 (Mexico)	0.12	4.60	5.60
3	0.25	4.00	5.00
4	0.25	5.50	6.50
5	0.12	4.85	5.85
6	0.12	4.75	5.75
7	0.12	6.25	7.25
8	0.12	7.25	8.25
Worldwide	0.20	7.00	8.00

INTERNATIONAL SURFACE AIR LIFT RATES

Rate group	Per piece rate	Full service per pound		Direct shipment per pound		ISC drop shipment per pound	
		Regular	M-bag	Regular	M-bag	Regular	M-bag
1 (Canada)	$0.28	$3.05	$1.50	$2.55	$1.50	$2.05	$1.40
2 (Mexico)	0.12	4.35	1.60	3.85	1.60	3.35	1.50
3	0.25	3.40	1.75	2.90	1.75	2.40	1.50
4	0.25	3.75	2.50	3.25	2.50	2.75	2.50
5	0.12	4.65	2.25	4.15	2.25	3.65	2.00
6	0.12	4.55	2.25	4.05	2.25	3.55	2.00
7	0.12	4.65	2.50	4.15	2.50	3.65	2.25
8	0.12	6.50	3.25	6.00	3.25	5.50	3.00

Note: M-bags are subject to the minimum rate for 11 pounds.

PUBLISHERS' PERIODICAL RATES

Weight not over (oz.)	Rate group 1 (Canada)	Rate group 2 (Mexico)	Rate group 3	Rate group 4 (Australia, Japan, New Zealand)	Rate group 5
1	$0.45	$0.60	$0.60	$0.60	$0.60
2	0.51	0.75	0.71	0.71	0.74
3	0.57	0.90	0.82	0.82	0.88
4	0.63	1.05	0.93	0.93	1.02
5	0.69	1.20	1.04	1.04	1.16
6	0.75	1.35	1.15	1.15	1.30
7	0.81	1.50	1.26	1.26	1.44
8	0.87	1.65	1.37	1.37	1.58
12	1.15	2.13	1.81	1.81	2.02
16	1.43	2.61	2.25	2.25	2.46
20	1.59	3.09	2.69	2.69	2.90
24	1.75	3.57	3.13	3.13	3.34
28	1.91	4.05	3.57	3.57	3.78
32	2.07	4.53	4.01	4.01	4.22
36	3.87	5.01	4.45	4.45	4.66
40	3.99	5.49	4.89	4.89	5.10
44	4.11	5.97	5.33	5.33	5.54
48	4.23	6.45	5.77	5.77	5.98
52	4.39	6.93	6.21	6.21	6.42
56	4.55	7.41	6.65	6.65	6.86
60	4.71	7.89	7.09	7.09	7.30
64	4.87	8.37	7.53	7.53	7.74

$0.25 per pound discount for drop shipments tendered at the New Jersey International and Bulk Mail Center.

COUNTRY RATE GROUPS

Country	Rate Groups		
	IPA	ISAL	Publishers' periodicals
Afghanistan	8		5
Albania	5	5	5
Algeria	8	8	5
Andorra	3		3
Angola	8	8	5
Anguilla	6		5
Antigua and Barbuda	6		5
Argentina	6	6	5
Armenia	8		5
Aruba	6	6	5
Ascension	5		5
Australia	4	4	4
Austria	3	3	5
Azerbaijan	8		5
Bahamas	6		5
Bahrain	8	8	5
Bangladesh	8	8	5
Barbados	6		5
Belarus	5		5
Belgium	3	3	3
Belize	6	6	5
Benin	8	8	5
Bermuda	6		5
Bhutan	8		5
Bolivia	6	6	5
Bosnia-Herzegovina	5		5
Botswana	8		5
Brazil	6	6	5
British Virgin Islands	6		5
Brunei Darussalam	7		5
Bulgaria	5	5	5
Burkina Faso	8	8	5
Burma (Myanmar)	8		5
Burundi	8		5
Cambodia	7		5
Cameroon	8	8	5
Canada	1	1	1
Cape Verde	8		5

COUNTRY RATE GROUPS—Continued

Country	Rate Groups		
	IPA	ISAL	Publishers' periodicals
Cayman	6		5
Central African Republic	8	8	5
Chad	8		5
Chile	6	6	5
China	7	7	5
Colombia	6	6	5
Comoros Islands	8		5
Congo (Brazzaville), Republic of the	8		5
Congo (Kinshasa), Democratic Republic of the	8	8	5
Costa Rica	6	6	5
Côte d'Ivoire (Ivory Coast)	8	8	5
Croatia	5		5
Cuba	6	6	5
Cyprus	8		5
Czech Republic	5	5	5
Denmark	3	3	3
Djibouti	8		5
Dominica	6		5
Dominican Republic	6	6	5
Ecuador	6	6	5
Egypt	8	8	5
El Salvador	6	6	5
Equatorial Guinea	8		5
Eritrea	8		5
Estonia	5		5
Ethiopia	8	8	5
Falkland Islands	6		5
Faroe Islands	5		3
Fiji	7	7	5
Finland	3	3	3
France (Includes Corsica & Monaco)	3	3	3
French Guiana	6	6	5
French Polynesia (Includes Tahiti)	7		5
Gabon	8	8	5
Gambia	8		5
Georgia, Republic of	8		5
Germany	3	3	3
Ghana	8	8	5
Gibraltar	3		3
Great Britain and Northern Ireland	3	3	3
Greece	3	3	3
Greenland	3		3
Grenada	6		5
Guadeloupe	6		5
Guatemala	6	6	5
Guinea	8		5
Guinea-Bissau	8		5
Guyana	6	6	5
Haiti	6	6	5
Honduras	6	6	5
Hong Kong	7	7	5
Hungary	5	5	5
Iceland	3	3	3
India	8	8	5
Indonesia (Includes East Timor)	7	7	5
Iran	8	8	5
Iraq	8		5
Ireland	3	3	3
Israel	3	3	3
Italy	3	3	3
Jamaica	6	6	5
Japan	4	4	4
Jordan	8	8	5
Kazakhstan	8		5
Kenya	8	8	5
Kiribati	7		5
Korea, Dem. People's Rep. of (North)	7		5
Korea, Republic of (South)	7	7	5
Kuwait	8	8	5

COUNTRY RATE GROUPS—Continued

Country	Rate Groups		
	IPA	ISAL	Publishers' periodicals
Kyrgyzstan	5		5
Laos	7		5
Latvia	5		5
Lebanon	8	8	5
Lesotho	8		5
Liberia	8		5
Libya	8		5
Liechtenstein	3	3	3
Lithuania	5		5
Luxembourg	3	3	3
Macao	5		5
Macedonia, Republic of	5		5
Madagascar	8	8	5
Malawi	8		5
Malaysia	7	7	5
Maldives	8		5
Mali	8	8	5
Malta	8		5
Martinique	6		5
Mauritania	8	8	5
Mauritius	8	8	5
Mexico	2	2	2
Moldova	8		5
Mongolia	7		5
Montserrat	6		5
Morocco	8	8	5
Mozambique	8	8	5
Namibia	8		5
Nauru	7		5
Nepal	7		5
Netherlands	3	3	3
Netherlands Antilles	6	6	5
New Caledonia	7		5
New Zealand	4	4	4
Nicaragua	6	6	5
Niger	8	8	5
Nigeria	8	8	5
Norway	3	3	3
Oman	8	8	5
Pakistan	8	8	5
Panama	6	6	5
Papua New Guinea	7	7	5
Paraguay	6	6	5
Peru	6	6	5
Philippines	7	7	5
Pitcairn Island	7		5
Poland	5	5	5
Portugal (Includes Azores & Madeira Islands)	3	3	3
Qatar	8	8	5
Reunion	8	8	5
Romania	5	5	5
Russia	5	5	5
Rwanda	8		5
Saint Christopher (St. Kitts) and Nevis	6		5
Saint Helena	8		5
Saint Lucia	6		5
Saint Pierre & Miquelon	6		5
Saint Vincent and the Grenadines	6		5
San Marino	3		3
Sao Tome and Principe	5		5
Saudi Arabia	8	8	5
Senegal	8	8	5
Serbia-Montenegro (Yugoslavia)	5		5
Seychelles	8		5
Sierra Leone	8		5
Singapore	7	7	5
Slovak Republic (Slovakia)	5		5
Slovenia	5		5
Solomon Islands	7		5

COUNTRY RATE GROUPS—Continued

Country	Rate Groups		
	IPA	ISAL	Publishers' periodicals
Somalia	8		5
South Africa	8	8	5
Spain (Includes Canary Islands)	3	3	3
Sri Lanka	8	8	5
Sudan	8	8	5
Suriname	6	6	5
Swaziland	8		5
Sweden	3	3	3
Switzerland	3	3	3
Syria	8	8	5
Taiwan	7	7	5
Tajikistan	8		5
Tanzania	8	8	5
Thailand	7	7	5
Togo	8	8	5
Tonga	7		5
Trinidad and Tobago	6	6	5
Tristan da Cunha	8		5
Tunisia	8	8	5
Turkey	5	5	5
Turkmenistan	5		5
Turks and Caicos Islands	6		5
Tuvalu	7		5
Uganda	8	8	5
Ukraine	8		5
United Arab Emirates	8	8	5
Uruguay	6	6	5
Uzbekistan	8		5
Vanuatu	7		5
Vatican City	3		3
Venezuela	6	6	5
Vietnam	7		5
Wallis and Futuna Islands	7		5
Western Samoa	7		5
Yemen	8	8	5
Zambia	8	8	5
Zimbabwe	8	8	5

Stanley F. Mires,

Chief Counsel, Legislative.

[FR Doc. 01–30626 Filed 12–12–01; 8:45 am]

BILLING CODE 7710–12–P

ENVIRONMENTAL PROTECTION AGENCY

40 CFR Part 300

[FRL–7117–9]

National Oil and Hazardous Substance Pollution Contingency Plan; National Priorities List Update

AGENCY: Environmental Protection Agency.

ACTION: Notice of deletion of the McAdoo Associates Superfund Site from the National Priorities List.

SUMMARY: The Environmental Protection Agency (EPA) Region III announces the deletion of the McAdoo Associates Superfund Site (Site), located in McAdoo Borough, Schuylkill County, Commonwealth of Pennsylvania, from the National Priorities List (NPL).

The NPL, promulgated pursuant to section 105 of the Comprehensive Environmental Response, Compensation, and Liability Act of 1980, as amended (CERCLA), 33 U.S.C. 9605, is appendix B of the National Oil and Hazardous Substances Pollution Contingency Plan (NCP), 40 CFR part 300. EPA and the Commonwealth of Pennsylvania, through the Pennsylvania Department of Environmental Protection, have determined that the site no longer poses a significant threat to public health or the environment and that all appropriate response actions under CERCLA have been completed. Monitoring of on-site wells, and five-year reviews to ensure that the site remains protective of public health and the environment will continue to be conducted.

EFFECTIVE DATE: December 13, 2001.

ADDRESSES: Comprehensive information on this site is available for viewing at the Site Information Repositories at the following locations: U.S. EPA, Region III, Regional Center for Environmental Information, 1650 Arch Street, Philadelphia, Pennsylvania 19103, (215) 814–5254 or (800) 553–2509, Monday through Friday 8 a.m. to 4:30 p.m.; McAdoo-Kelayers Library, 15 Kelayers Road, McAdoo, Pennsylvania 18237, (570) 929–1120;

FOR FURTHER INFORMATION CONTACT: Eugene Dennis (3HS21), Remedial Project Manager, U.S. Environmental Protection Agency, Region III, 1650 Arch Street, Philadelphia, PA 19103–2029; (215) 814–3202 or 1–800–553–2509; e-mail address: *dennis.eugene@epa.gov*.

SUPPLEMENTARY INFORMATION: The site to be deleted from the NPL is: McAdoo Associates Site, McAdoo Borough, Schuylkill County, Commonwealth of Pennsylvania.

A Notice of Intent to Delete for this site was published in the **Federal Register** on October 3, 2001, 66 FR 48018. The closing date for comments on the Notice of Intent to Delete was November 2, 2001. EPA received no comments during the comment period.

EPA identifies sites that appear to present a significant risk to public health, welfare, or the environment and it maintains the NPL as the list of those sites. Any site deleted from the NPL remains eligible for Fund-financed remedial actions in the unlikely event that conditions at the site warrant such action. Section 300.425(e)(3) of the NCP states that Fund-financed actions may be taken at sites deleted from the NPL. Deletion of a site from the NPL does not affect responsible party liability or impede agency efforts to recover costs associated with response efforts.

List of Subjects in 40 CFR Part 300

Environmental protection, Air pollution control, Chemicals, Hazardous waste, Hazardous substances, Intergovernmental relations, Penalties, Reporting and recordkeeping requirements, Superfund, Water pollution control, Water supply.

Dated: November 21, 2001.

Abraham Ferdes,

Acting Regional Administrator, Region III.

For the reasons set out in this document, 40 CFR part 300 is amended as follows:

PART 300—[AMENDED]

1. The authority citation for part 300 continues to read as follows:

Authority: 33 U.S.C. 1321(c)(2); 42 U.S.C. 9601–9657; E.O. 12777, 56 FR 54757, 3 CFR, 1991 Comp., p.351; E.O. 12580, 52 FR 2923, 3 CFR, 1987 Comp., p.193.

Appendix B—[Amended]

2. Table 1 of appendix B to part 300 is amended under Pennsylvania (''PA'') by removing the entry for ''McAdoo Associates, McAdoo Borough''.

[FR Doc. 01–30819 Filed 12–12–01; 8:45 am]

BILLING CODE 6560–50–P

DEPARTMENT OF TRANSPORTATION

National Highway Traffic Safety Administration

49 CFR Part 571

[Docket No. NHTSA–98–4662]

RIN 2127–AC19

Federal Motor Vehicle Safety Standards; School Bus Body Joint Strength

AGENCY: National Highway Traffic Safety Administration (NHTSA), Department of Transportation.

ACTION: Final rule; response to petitions for reconsideration.

SUMMARY: On November 5, 1998, NHTSA published a final rule that amended Federal Motor Vehicle Safety Standard No. 221, *School Bus Body Joint Strength,* with an effective date of May 5, 2000 for those amendments. The amendments extended the applicability of that standard to small school buses, narrowed the exclusion of maintenance access panels from the joint strength requirements, and made other changes to the standard. We delayed the effective date on two occasions, so that we would have time to analyze petitions for reconsideration. First, in a final rule published on March 6, 2000, we delayed the effective date to May 5, 2001, and corrected a typographical error. Second, in a final rule published on April 20, 2001, we delayed the effective date to June 1, 2002. We have now completed our analysis of the petitions, and are taking the following actions: making it clearer that the standard applies to small, curved and complex joints; excluding joints that are forward of the passenger component; and making various other changes to the standard. For purposes of clarity, we are withdrawing the earlier amendments, and are republishing them today as modified by the changes we decided to make in response to the petitions for reconsideration. The amendments will become effective on January 1, 2003.

DATES: The final rule published on November 5, 1998 (63 FR 59732) and amended and delayed March 6, 2000 (65 FR 11751), and delayed again on April 20, 2001 until June 1, 2002 (66 FR 20199) is withdrawn as of January 14, 2002. The amendments in this final rule are effective January 1, 2003. Any petitions for reconsideration of this final rule must be received by NHTSA not later than January 28, 2002.

ADDRESSES: Petitions for reconsideration should refer to the docket number for this action and be submitted to: Administrator, National Highway Traffic Safety Administration, 400 Seventh Street, SW., Washington, DC 20590. Copies of the Final Regulatory Evaluation for this rule can be obtained from: Docket Management, Room PL–401, 400 Seventh Street, SW., Washington, DC, 20590, telephone: (202) 366–9324. Docket hours are 10 a.m. to 5 p.m., Monday through Friday. The Docket is closed on Federal holidays.

FOR FURTHER INFORMATION CONTACT: For non-legal issues, you may call Mr. Charles R. Hott, Office of Crashworthiness Standards at (202) 366–0247. His fax number is (202) 493–2739.

For legal issues, you may call Ms. Dorothy Nakama, Office of the Chief Counsel at (202) 366–2992. Her fax number is (202) 366–3820.

You may send mail to both of these officials at National Highway Traffic Safety Administration, 400 Seventh Street SW., Washington, DC 20590.

SUPPLEMENTARY INFORMATION:

I. Background
II. Final Rule of November 1998
A. Applicability to Small School Buses
B. Maintenance Access Panels
1. Definition
2. Criteria to be Excluded
3. MAP Floor Panels
C. Engine Access Panels, Ventilation Panels, and Perforated Panels
1. Engine Panels
2. Ventilation Panels
3. Perforated Panels
D. Test Procedures
1. Small and Curved Joints
2. Complex Joints
3. ''Hour-Glass'' Shape of Specimens
4. Discontinuing Deduction of Total Area of Material Removed for Installation of Fasteners
E. Relative v. Minimum Body Joint Strength Requirements
III. Petitions for Reconsideration and Changes to Final Rule
A. Exclusion of Small, Curved, and Complex Joints
B. School Bus Joints Forward of the Passenger Compartment
C. Removing Cross-Sectional Area of Material in Tensile Strength Calculation
D. Degrees of Tolerance in the Testing Machine Grip Adjustment
E. Additional School Bus Issues Raised by Blue Bird Body Company
F. Effective Date of January 1, 2003
IV. Rulemaking Analyses and Notices
A. EO 12866; DOT Regulatory Policies and Procedures
B. Regulatory Flexibility Act
C. Paperwork Reduction Act
D. National Environmental Policy Act
E. Executive Order 13132 (Federalism)
F. Executive Order 12778 (Civil Justice Reform)
G. Unfunded Mandates Reform Act of 1995
H. Executive Order 13045 (Economically Significant Rules Affecting Children)

I. National Technology Transfer and Advancement Act
J. Plain Language
K. Regulation Identifier Number (RIN)

I. Background

NHTSA is authorized by 49 U.S.C. 30101, *et seq.*, to issue Federal motor vehicle safety standards for new motor vehicles, including school buses.[1] In 1974, Congress enacted the Motor Vehicle and Schoolbus Safety Amendments (Pub. L. 93–492), which directed NHTSA to issue Federal motor vehicle safety standards for various aspects of school bus safety, including interior protection for occupants, floor strength, and crashworthiness of body and frame. One of the actions that NHTSA took in response to that Congressional mandate was to issue Standard No. 221, *School Bus Body Joint Strength.*

Standard No. 221 requires the strengthening of school bus body panel joints to prevent them from separating during a crash, thereby exposing cutting edges that could cause serious injuries or allow passenger ejection through openings created by such panel separations. The Standard currently provides that each school bus body panel joint must be capable of holding the body panel to the member to which it is joined when subjected to a force of 60 percent of the tensile strength of the weakest body panel attached to the joint.

Excluded from this requirement are doors, windows, spaces designed for ventilation or another functional purpose, and maintenance access panels (MAPs). MAPs were excluded because they involve areas on the vehicle requiring frequent maintenance and thus needing easy accessibility. Although MAPs were not defined in the Standard, it was NHTSA's intent that manufacturers would limit MAPs to panels providing access to areas requiring routine maintenance.

II. Final Rule of November 1998

On November 5, 1998, NHTSA published in the **Federal Register** a final rule (63 FR 59732) (DMS Docket No. NHTSA–98–4662) that was intended to ''enhance the applicability and objectivity of Standard No. 221's school bus joint strength requirements.'' Before issuing this final rule, NHTSA issued an advance notice of proposed rulemaking (52 FR 23314, June 19, 1987) (No DMS Docket No.) and a notice of proposed rulemaking (56 FR 11142, March 15, 1991) (No DMS Docket No.). NHTSA received 37 comments in response to the ANPRM and 18 comments in response to the NPRM. Each comment was carefully considered before the final rule was issued.

Until the November 1998 final rule takes effect, Standard No. 221 will apply to only school buses over 4536 kg (10,000 lbs) gross vehicle weight rating (GVWR). In the November 1998 final rule, NHTSA extended the applicability of Standard No. 221 to small school buses (GVWR of 4536 kg or less), narrowed the exclusion of MAPs from the joint strength requirements, and made other changes to the Standard. The following summarizes the November 1998 final rule changes to Standard No. 221.

A. Applicability to Small School Buses

In the November 1998 final rule, NHTSA extended the applicability of Standard No. 221 to small school buses (GVWR of 4536 kg or less), after concluding that there is a safety need to extend the Standard to small school buses. The National Transportation Safety Board (NTSB) was concerned that small school buses experience higher crash forces in a crash than do large school buses, since size and mass are important factors in crash severity. NTSB studies on the crashworthiness of large and small school buses found that 6 of 19 small school bus crashes resulted in body panel joint separation (32 percent of the cases studied). In contrast, joint separations in large school buses occurred in MAPs and floor joints, while body panel joints maintained structural integrity very well, even in severe crash forces. These results indicate that the requirements of Standard 221 are very effective (see NTSB Safety Study: Crashworthiness of Small Poststandard School Buses, October 11, 1989). Further, these results led NHTSA to conclude that the structural integrity of small buses would be enhanced by extending the joint strength requirement of Standard 221 to those vehicles. NHTSA concluded that small school buses should at least be subject to the same joint strength requirements as large school buses. This will better help achieve the goal of providing children with equivalent levels of protection against injuries from joint separation, regardless of the GVWR of the vehicle transporting them.

Small school buses are becoming an increasingly larger part of the school bus fleet. From 1988 to 1993, the percentage of small school buses in the total school bus sales for rose from about 13 percent to about 19 percent (an increase of almost 50 percent in market share). From 1994 to 1998, the percentage of small school bus sales held steady at about 16 percent. This rise in sales concerns us because it indicates that crashes and resultant injuries involving small school buses are likely to increase.

B. Maintenance Access Panels

In the November 1998 final rule, NHTSA defined ''maintenance access panel'' to limit a manufacturer's latitude to designate panels as MAPs and thus have them excluded from the strength requirements of the standard. NHTSA determined that there was a safety need to restrict MAPs. After reviewing NTSB studies and recent NTSB school bus crash investigation reports, NHTSA found that 7 out of 80 crashes studied involved MAP separations, causing head laceration injuries in two of the cases. In 4 of the 20 crashes involving small school buses, body joint separations occurred, resulting in one occupant with multiple leg fractures. Further, NHTSA's own tests had shown that MAP joints were not strong and could separate easily. In order to be excluded from the requirements of Standard No. 221 as a ''maintenance access panel'' under this rule, a panel must meet the definition of a MAP, and must also meet certain criteria.

1. Definition

The final rule defined ''maintenance access panel'' as ''a body panel which must be moved or removed to provide access to one or more serviceable component(s).'' The rule also defined ''serviceable component'' as a part of the bus which is identified by the body or chassis manufacturer in the owners' or service manuals as requiring routine maintenance at least once each year. The definition specifies that ''serviceable component'' includes pneumatic and hydraulic devices, wiring harnesses, and tubing only at their attachments.

2. Criteria To Be Excluded

The final rule set criteria that a MAP must meet to be excluded from the requirements of Standard No. 221. To be excluded, the MAP must either: (1) Be located forward of the passenger seating area (the MAP must not lie between a vertical transverse plane located 762 mm (30 inches) in front of the forwardmost passenger seating reference point and a vertical transverse plane

[1] 49 U.S.C. 30125(a)(1) defines a ''schoolbus'' as a passenger motor vehicle designed to carry a driver and more than ten passengers that the Secretary of Transportation determines ''is likely to be used significantly to transport preprimary, primary, and secondary school students to or from school or an event related to school.'' NHTSA further defines a school bus as a bus that is sold or introduced in interstate commerce for purposes that include carrying students to and from school and related events, but does not include a bus that is designed and sold for operation as a common carrier in urban transportation. 49 CFR 571.3.

tangent to the rear interior wall of the bus at the vehicle's centerline); or (2) be located within the passenger seating area and have an opening that does not exceed 305 mm (12 inches) when measured across any two points diametrically on opposite sides of the opening.

The 305 mm measurement is independent of the serviceable component's perimeter and location. By adopting this restriction, NHTSA sought to ensure that each MAP is no larger than needed to provide access to the serviceable component(s) covered by the MAP.

3. MAP Floor Panels

MAPs that expose the bus interior to areas below the bus floor or within the engine compartment are excluded from Standard No. 221's requirements if the MAP meets the restrictions on either MAP location or size described above. In the November 1998 final rule, NHTSA determined that there is insufficient fire-related reason to require any MAP, regardless of its location outside the bus occupant space or insignificant size, to meet the joint strength requirement if it is on the floor.

C. Engine Access Panels, Ventilation Panels, and Perforated Panels

1. Engine Panels

In the November 1998 final rule, NHTSA excluded engine access panels from the requirements of the Standard. NHTSA believed that engine covers on most front engine buses are located outside the passenger compartment area and that maintenance on rear engine buses is routinely accomplished from the outside. The agency agreed with commenters that direct and often-recurring engine maintenance should be quickly and easily accomplished. This requires easy accessibility to the engine compartment by the driver who may not have an extensive array of tools available.

2. Ventilation Panels

Ventilation panels are used for heater housings, heater air diffusers, heater ducts, heater hose covers, and air conditioning ducts and diffusers. One commenter argued that all those components serve important functional purposes, that the components enclose no occupant air space, and are typically supported by panels that must meet Standard No. 221. After being persuaded that the ventilated panel exclusion is being utilized and that ventilation panels do serve important functional purposes, in the November 1998 final rule, NHTSA determined that ventilation panels should continue to be excluded from the joint strength requirements of Standard 221. Further, due to their size and location, ventilation panels are not so likely as first thought to cause occupant injuries in an accident. NHTSA expressed its belief that extending the joint strength requirements to these panels would result in increased costs for redesign and additional fasteners, as well as decreased serviceability for the end user, without a commensurate safety benefit.

3. Perforated Panels

A commenter stated that perforated metal sheets are widely used in the interior linings of school buses to reduce interior noise, and that the perforations do not extend into the joint area, making the joints stronger than the perforated portions of the panels. NHTSA stated that it was aware that perforated material is often used in school bus ceilings for noise reduction. The agency is unaware of any problems with perforated panels, such as instances in which perforations contributed to the failure of a joint or in which panels separated due to torn perforations. In the November 1998 final rule, NHTSA stated it will monitor the use of perforated panels and their performance in school buses to determine whether there is a safety need to limit or otherwise regulate their use.

D. Test Procedures

The November 1998 final rule made a number of revisions to Standard No. 221's test procedures, including excluding curved, small and complex joints from testing; adopting a provision that support members must remain attached to the specimen during testing; and deleting the term ''approximately perpendicular'' from S6.3.2 and replacing it by a provision stating that the joint be in stress at 90 degrees plus or minus 3 degrees from the joint centerline.

1. Curved and Small Joints

The November 1998 final rule excluded from the joint tensile strength requirement joints from which a test sample cannot be obtained because of the small size of the joint or the curvature of the panels comprising the joint.

In the NPRM, NHTSA proposed a procedure for testing curved joints, such as those found in roof or ceiling joints. The procedure would have specified that the test specimen be prepared by selecting a joint segment where the radius of curvature is at least 508 mm (20 inches). One commenter, Thomas Built Buses, suggested a method of testing a curved joint, but stated that in order to prevent distortion of the test results, the gripping devices must be able to grip the sample in the same radius as the sample curvature. To avoid such complex test procedures, Thomas strongly recommended that NHTSA approve the use of surrogate joints.

NHTSA recognized that the curved shape of such joints poses difficulty in obtaining accurate test results. The application of force on a curved surface would cause the surface to flatten, thus misrepresenting the actual force loading on the panel. Although NHTSA believes that it is possible to design and fabricate test fixtures and procedures capable of testing curved joints, such fixtures would involve additional certification costs for manufacturers and additional cost for NHTSA in the agency's compliance testing. In the November 1998 final rule, NHTSA stated that since it is not aware of any data indicating that injuries have been caused disproportionately by curved joint separation, NHTSA believes that the potential costs and technical difficulty of testing curved joints more than outweigh any potential safety benefits. However, the agency stated that it will continue to monitor this issue and initiate rulemaking should curved joint separation become a safety problem.

2. Complex Joints

Two commenters addressed NHTSA's proposals to test small and complex joints such as those taken from door, window, and other small or inaccessible body panel joints. General Motors Corporation (GM) stated that NHTSA's proposals regarding the testing of these joints did not fully clarify specimen preparation procedures for such joints found in passenger vans or van cutaways. The commenters contended that many of the joints in those vehicles cannot be tested under either current or proposed testing procedures. GM suggested that NHTSA further study such types of joints and either further clarify pertinent test procedures or exclude such joints from the requirements of Standard 221 as being nontestable. Thomas Built Buses asserted that the testing of very short pieces of frame that would require fittings would violate ASTM test principles. Thomas further argued that tests need not be performed in this manner if NHTSA would approve the use of surrogate sampling.

NHTSA agreed that it would be difficult to test complex joints such as those found in body panels configured to join two or more panels in a single plane in any manner other than linear,

as well as other small joints under either current or proposed testing procedures. Therefore, in the November 1998 final rule, NHTSA decided that test specimens from joints with discrete fasteners will be taken from 305 mm (12 inch) segments (203 mm (8 inches) at the neck) of flat body panels only. Small and complex joints, as well as trim, decorative parts, floor coverings, and molding strips will not be tested. The agency stated that it has no data indicating that any injuries have been caused by failure of those small and complex joints or components. NHTSA stated further that it believed the potential cost of trying to test them would far outweigh any potential safety benefits.

While curved, small and complex joints are excluded from the tensile test requirement because they cannot be accommodated in the test apparatus, they are nevertheless subject to the requirement in S5.1.1 that no body panel, when joined to another body panel, shall have an unattached segment at the joint longer than 203 mm (8 inches). Presumably, rivets or other fasteners will be used. In the November 1998 final rule, NHTSA indicated its belief that this requirement will increase the likelihood that the joints will maintain their integrity in a crash.

3. ''Hourglass'' Shape of Specimens

NHTSA had proposed that the existing ''hourglass'' shape of test specimens be eliminated in favor of straight sides because it believed that, with a simple rectangular shape, more joints could potentially be tested. A commenter stated that use of a straight-sided test specimen was contrary to the shape principles set forth in the ASTM sample testing procedures. Those principles were designed to ''even-out'' the force distortions induced by the testing device. Another commenter stated that the proposal to eliminate the hour glass shape was unacceptable, arguing that the test specimens need to be wider at the grips than at the joint section being tested. It said that this width is needed to allow for proper attachment of the specimen to the test grips and to ensure that adequate loading can be properly applied to the joint portion of the specimen.

In the November 1998 final rule, NHTSA said that it was persuaded by the comments and decided to retain the hourglass shape of test specimens. The ASTM Standards call for the shape of the test specimen to be narrower at the sample's longitudinal centerline than at the ends of the specimen where the grips are attached. That shape concentrates the load exerted by the grips in the center of the specimen rather than at the edges as in the case of a straight-sided specimen.

4. Discontinuing Deduction of Total Area of Material Removed for Installation of Fasteners

NHTSA had proposed to discontinue deduction of the total area of material removed for installation of fasteners (i.e., holes drilled for installation of rivets or screws) in calculating the tensile strength of each joined component. In a letter to Blue Bird Body Company dated November 28, 1978, NHTSA stated that subtracting the fastener holes was the proper procedure for calculating the correct area of the sample, but did not explain the basis for that conclusion.

NHTSA carefully considered the issue in light of public comments. NHTSA determined it is easier for a sample joint to meet the standard's tensile strength requirement when the deduction is made for fastener holes. The required strength of a given joint is based on the tensile strength of the weakest body panel attached at that joint. If the area for fastener holes were deducted from the total area of the test specimen when calculating the strength of the test specimen, the tensile strength of a sample joint could appear higher than the actual tensile strength of that joint. As a result, a given joint could meet the 60 percent tensile requirement of Standard 221 using fewer fasteners than those that would be necessary if the deduction were not made. In setting the 60 percent tensile requirement, the agency determined that minimum value met the need for motor vehicle safety. Since deducting for fastener holes can result in a joint being actually weaker than 60 percent of its weakest member, NHTSA determined that safety is better served if the deduction were not made. Accordingly, in the final rule, the letter of interpretation issued by NHTSA on November 28, 1978 that provided for the deduction was rescinded.

E. Relative vs. Minimum Body Joint Strength Requirements

In response to NHTSA's ANPRM of June 19, 1987, several commenters suggested that NHTSA replace the present relative body joint strength requirement (60 percent of the tensile strength of the weakest joined body panel) with an absolute minimum strength requirement. NHTSA carefully considered the comments on this issue and was persuaded by the commenters who argued that body panel joint strength should be consistent with the bus manufacturers' choice of body panel materials. In the November 1998 final rule, NHTSA determined that specifying a minimum absolute strength requirement by specifying a minimum steel gauge would be design restrictive and require significant changes in current industry design practices and procedures. NHTSA also perceived no safety basis for changing the current relative strength standard in favor of an absolute minimum standard.

III. Petitions for Reconsideration and Changes to Final Rule

In response to the November 5, 1998 final rule, NHTSA received petitions for reconsideration from three school bus manufacturers; American Transportation Corporation (AmTran), Blue Bird Body Co., and Thomas Built Buses. Each manufacturer raised similar concerns. The following summarizes each issue raised in the petitions for reconsideration and each manufacturers' arguments on the issue, and provides NHTSA's response:

A. Exclusion of Small, Curved, and Complex Joints

As noted above, in the November 1998 final rule, NHTSA amended Standard No. 221's tensile strength requirements to exclude joints from which a test sample cannot be obtained because of the joint's small size or because curvature or complexity of the panels comprising the joint made it unable to fit into the test apparatus. All three petitioners opposed this change, saying that the effect would be to remove from Standard No. 221's coverage, many small, curved and complex joints that have been subject to Standard No. 221.

AmTran asked that S5.1.2 be amended so that small, curved and complex joints must meet previous S5.1.2 requirements. AmTran noted that each of its school buses has over 100 joints that meet the previous S5.1.2 requirements, but changes in the November 5, 1998 final rule would permit AmTran to reduce to 14, the number of joints that must meet S5.1.2. AmTran also expressed concern that in the absence of Federal requirements, each State could specify its own joint strength requirements, adding to ''product complexity.'' Thomas Built argued that exclusion of such joints from S5.1.2 ''unnecessarily weakens the current standard strength requirement at curved, small and complex joints.'' Thomas Built asked that NHTSA consider an equipment standard to require fastener spacing on curved, small and complex joints equal to that used in the adjacent straight section of the same joint or basically a ''continuation of the spacing.''

Blue Bird stated that although it agreed with the exclusion of small joints (less than 8 inches in length), it believed that curved and complex joints should be required to meet Standard No. 221 joint strength requirements. Blue Bird said that there were two separate issues in the exclusion of curved and complex joints: (1) ''Testing accommodation'' which would include the problems associated with obtaining, preparing, and tensile testing curved and complex joints; and (2) Exclusion of ''automotive'' type body joints (which are small, curved or complex) that occur in van and van cutaway buses so that manufacturers of these vehicles could continue to modify such vehicles into school buses.

Addressing the first issue, Blue Bird asserted that allowing the manufacture of school buses without subjecting the curved and complex joints to joint strength testing would be ''a serious, albeit unintended, degradation of school bus safety.'' Blue Bird noted that since most joints in the passenger compartment area of school buses are either curved or complex, exclusion of such joints from joint strength requirements would allow the manufacture of school buses with only a few flat joints in the side walls required to meet the joint strength requirement. The school bus roof and ceiling joints are curved and would therefore be excluded. All the joints at the corners and the rear of the bus body are curved and/or complex, and most floor joints are complex and would be excluded.

Blue Bird stated its belief that certification documentation for curved and complex joints can be handled by surrogate sample testing and/or design calculations and analysis. For enforcement purposes, Blue Bird suggested that NHTSA could inspect test buses, measure and inspect joints and require manufacturers to document compliance to what is found. Blue Bird further suggested that NHTSA could review surrogate sample testing data, design calculations and analysis and the results of NHTSA inspections as a means of monitoring a manufacturer's fastening methodology to determine if it constitutes the exercise of due care in complying with the joint strength requirements.

As for the second issue regarding ''automotive-type'' body joints, Blue Bird suggested that exclusion of structures forward of the passenger compartment could resolve the problems that would arise from testing of automotive-type joints. Blue Bird stated that ''no safety problems have been documented'' that would justify automotive-type joints having to meet the joint strength requirements of Standard No. 221.

The petitioners expressed concern that the application of S5.2.2 may decrease the effectiveness of the standard. In the November 1998 final rule, S5.2.2 stated:

> S5.2.2 The requirements of S5.1.2 do not apply to joints from which a test specimen of the dimensions specified in Figure 1 can not be obtained.

The petitioners interpreted this section to exclude all joints that are curved and/or complex. The petitioners are aware that this is not the intent of the agency. Nevertheless, the agency agrees to remove S5.2.2 from the standard to avoid this possibility of a manufacturer's arguing, in the event of a compliance test failure, that the standard does not apply to the joint tested. Figure 1 does not provide a side view of the test specimen, and therefore does not indicate a maximum or minimum curvature of the tested components.

B. School Bus Joints Forward of the Passenger Compartment

In the November1998 final rule, NHTSA excluded from the joint test requirements, all interior maintenance access panels which lie forward of the passenger compartment. In doing so, NHTSA addressed MAPs only, not interior school bus joints forward of the passenger compartment.

In their petitions for reconsideration, petitioners asked that joints forward of the passenger compartment be excluded from joint strength testing requirements. AmTran asked that the exclusion be extended to ''structures'' forward of the passenger compartment. AmTran did not explain what it meant by ''structures,'' but we believe that AmTran was seeking the exclusion of joints forward of the passenger compartment. AmTran recommended that S5.2 and S4 be harmonized to standardize the area of application within the school bus industry, stating that locations of the windshield in relationship to body panels or panels supplied by the chassis manufacturer vary by body style and by manufacturer.

As explained in the previous section addressing the issue of small, curved and complex joints, Blue Bird asked that all joints that lie forward of the passenger compartment be excluded from the joint strength requirement in order to solve the problem of testing procedures for ''automotive-type'' joints. Blue Bird also recommended that ''bus body'' be redefined to exclude any structure forward of the passenger compartment. Blue Bird's rationale was that the redefinition ''greatly simplifies'' the standard by excluding many ''controversial and problematic'' joints, removes the need to exclude MAPs in this area and provides the desired exclusion for all joints in a cutaway van and most joints in a van-type school bus.

NHTSA agrees with petitioners that joints forward of the passenger compartment should be excluded from Standard No. 221's joint strength requirements. Over the years, we have had no information that ''automotive-type'' or other joints forward of the passenger compartment have posed safety-related problems that would necessitate ''automotive-type'' joints having to meet joint strength testing requirements. This is despite the fact that the smaller (4536 kg or less) school buses built on van and van cutaways (on which ''automotive-type'' joints are found) were not subject to Standard No. 221 until the November 5, 1998 final rule.

C. Removing Cross-Sectional Area of Material in Tensile Strength Calculation

In the final rule, NHTSA discontinued the deduction of the total area of material removed for installation of fasteners (i.e., holes drilled for installation of rivets or screws) in calculating the tensile strength of each joined component. In discontinuing the deduction, NHTSA's rationale was that it is easier for a sample joint to meet the standard's tensile strength requirement when the deduction is made for fastener holes. In setting the 60 percent tensile requirement, the agency determined that that minimum value meet the need for motor vehicle safety. Since deducting for fastener holes can result in a joint being actually weaker than 60 percent of its weakest member, safety is better served if the deduction were not made. Therefore, a letter of interpretation issued by NHTSA on November 28, 1978 that provided for the deduction was rescinded.

All three petitioners opposed the change in the deduction for the area for fastener holes and rescission of the November 28, 1978 interpretation letter. Both AmTran and Thomas Built cited an NTSB study that found that large school buses with body panel joints that met Standard No. 221 maintained structural integrity very well, even in severe crashes, thus providing effective protection to school bus occupants. Thomas Built added that this shows that current design practices have successfully maintained the integrity of body panel joints.

Blue Bird stated that approximately half of the joint designs used in manufacturing Blue Bird school buses use discrete fasteners and the majority of these will require redesign and testing. Blue Bird estimated that the number of required fasteners will increase between 12 and 25 percent. Blue Bird cited other negative factors resulting from the change in the calculation procedure as needing to change hard tooling with long lead times, increased material and labor costs, more noise and repetitive motion injuries in production, increased repair costs and little or no value added to the product. Thomas Built described the cost burden of the new calculation procedure as ''staggering,'' providing estimates of the cost increases due to the new joint strength calculation procedure. Thomas Built estimated that the cost per new school bus of the new calculation procedure was $155 extra for labor and fasteners and $40 extra for tooling and fixtures, totaling $195 more per school bus. Thomas Built also estimated that new calculation procedure also would result in additional costs of $25,000 for plant modifications and $1,050,000 for tooling, a total of $1,075,000.

Regarding Thomas Built's arguments, NHTSA does not agree with Thomas Built that deducting for holes in the test sample is the proper procedure for calculating joint efficiency. The references provided by Thomas are for calculating the tensile strength of the test sample, not joint efficiency. NHTSA notes the tensile strength of a lap joint with discrete fasteners is a function of the shear strength of the fasteners, hole spacing and edge distance on the base plates.

Upon careful consideration of the petitioners' arguments, NHTSA agrees that the deduction for holes in the test sample should be maintained because this change in calculation procedure increases the cost of a school bus while providing little, if any, demonstrable safety benefits. The interpretation letter of November 28, 1978 is also reinstated.

D. Degrees of Tolerance in the Testing Machine Grip Adjustment

Blue Bird Body Co. argued that the plus or minus 3 degrees of tolerance in S6.3.2 testing machine grip adjustment is too great in that it allows the direction of the applied force on the ends of the specimen to be more than one and one quarter inches from the specimen centerline. Stating that such a tolerance could result in inaccurate test results, Blue Bird recommended plus or minus 1 degree as an acceptable tolerance. NHTSA does not agree with Blue Bird, and does not believe that the plus or minus 3 degrees of tolerance would result in producing inaccurate test results. Therefore, S6.3.2 of the November 1998 final rule will remain as issued.

Blue Bird argued that there is an apparent oversight in S6.2(a) where the mechanical properties of materials are known. Blue Bird stated that S6.2(a) should address the minimum material thickness as well as the minimum tensile strength for calculating tensile force. The agency does not agree. The agency believes that it is relatively simple to make a thickness measurement from the test specimen. Unlike the other mechanical properties such as tensile strength, which involves cutting and testing a specimen, a thickness measurement can easily be obtained from the test specimen.

E. Additional School Bus Issues Raised by Blue Bird Body Company

In its petition for reconsideration, Blue Bird also raised the following issues. Because none of them was raised in the notice of proposed rulemaking, NHTSA is unable to adopt them in this final rule; response to petitions for reconsideration. However, depending on whether NHTSA determines that adopting each recommendation would promote safety or would otherwise be justified, each issue may be a subject for future Standard No. 221 rulemaking.

As its first issue, Blue Bird suggested that a design solution to providing maintenance access panels to wiring and other components could be ''non-metallic, non-hostile access panels.'' Blue Bird provided as an example the use of a continuous ''plastic'' extrusion above the window to replace existing wire molding. These access panels could be designed to provide needed access to wiring or other components that may require service, and yet would be light and flexible enough to not injure occupants in the event of a crash. Blue Bird asked NHTSA to consider the advantages of such designs and amend the final rule to permit their use. On a related issue, Blue Bird stated that in order to foster improvement in design and manufacture of school buses, Standard No. 221 should permit the use of plastic, fiber enforced resin, and other construction materials as well as the use of structural adhesives.

NHTSA notes that nothing in Standard No. 221 prohibits use of plastic, fiber enforced resin or ''other construction materials'' in the manufacture of school bus joints. Standard No. 221 specifies test procedures for school bus joint strength of ''joint component material.'' (See S6.2(a).) Also, because the issue of permitting ''non-metallic, non-hostile access panels'' was not raised in the notice of proposed rulemaking, it is outside the scope of the final rule. NHTSA agrees that the idea of access panels that are non-hostile to occupants in crashes is worthy of further investigation.

Blue Bird also stated that if curved and/or complex joints are addressed in Standard No. 221, definitions must be provided, or Figure 1 must show side and end views of the specimen with tolerances on critical dimensions. NHTSA agrees that if there are any unclear or unresolved areas in Standard No. 221, they should be addressed by notice and comment rulemaking, where the public will have an opportunity to present its views.

F. Effective Date of January 1, 2003

In the November 5, 1998 final rule, NHTSA announced an effective date of May 5, 2000 for those amendments. In a final rule published on March 6, 2000, NHTSA delayed the effective date of the November 1998 final rule to May 5, 2001, and corrected a typographical error in the November 1998 final rule. In a final rule published on April 20, 2001 (66 FR 20199) (DOT DMS No. NHTSA–2001–9440), delayed again the effective date of the November 1998 final rule until June 1, 2002.

June 1, 2002 will be less than a year away when this final rule; response to petitions for reconsideration is published. NHTSA seeks to ensure that the school bus industry has adequate notice of the changes in this document, and can make the die and tooling and other manufacturing changes necessary to meet this final rule. We also note that virtually all the changes to the November 1998 final rule were made because NHTSA was petitioned by industry to make these changes. Accordingly, in this final rule, we establish an effective date of January 1, 2003 for the November 1998 final rule, as amended by the changes made in today's final rule.

As advised to do so by **Federal Register** editors, for purposes of clarity, in this document we are withdrawing the November 1998 final rule, and are republishing it today, as modified by the changes we decided to make in response to the petitions for reconsideration.

IV. Rulemaking Analyses and Notices

A. Executive Order 12866; DOT Regulatory Policies and Procedures

Executive Order 12866, ''Regulatory Planning and Review'' (58 FR 51735, October 4, 1993), provides for making

determinations whether a regulatory action is ''significant'' and therefore subject to Office of Management and Budget (OMB) review and to the requirements of the Executive Order. The Order defines a ''significant regulatory action'' as one that is likely to result in a rule that may:

(1) Have an annual effect on the economy of $100 million or more or adversely affect in a material way the economy, a sector of the economy, productivity, competition, jobs, the environment, public health or safety, or State, local, or Tribal governments or communities;

(2) Create a serious inconsistency or otherwise interfere with an action taken or planned by another agency;

(3) Materially alter the budgetary impact of entitlements, grants, user fees, or loan programs or rights and obligations of recipients thereof; or

(4) Raise novel legal or policy issues arising out of legal mandates, the President's priorities, or the principles set forth in the Executive Order.

NHTSA has evaluated the impacts of this final rule under Executive Order 12866 and the Department of Transportation's regulatory policies and procedures. This rule is not considered a significant regulatory action under section 3(f) of Executive Order 12866. Consequently, it was not reviewed by the Office of Management and Budget. This final rule is also not considered to be significant under the Department's Regulatory Policies and Procedures (44 FR 11034; February 26, 1979).

The agency prepared a Final Regulatory Evaluation (FRE) for the final rule that was published on November 5, 1998 (63 FR 59732) and has placed a copy of that FRE in the public docket. A copy of the FRE may be obtained by contacting the Department's Docket at the address given at the beginning of this document. For the reasons explained below, we believe this final rule will have no additional cost effects on school bus manufacturers above those resulting from the 1998 final rule.

As explained in the FRE, for the November 1998 final rule, NHTSA estimated that the average consumer cost per vehicle affected by the November 1998 final rule is approximately $221 per large school bus and $343 per small school bus. Those retail price increases include variable costs, fixed factory overhead, tooling, and manufacturers' and dealers' profit margins. The difference in cost between large and small buses arises from the fact that large school buses, which already comply with the body panel joint strength standards of Standard 221, have only to bring their MAPs into compliance. Small school buses, on the other hand, which have heretofore been excluded from the joint strength requirements of Standard 221, must bring their body panel joints and their MAPs into compliance.

Information available to NHTSA indicates that the average combined total of annual sales of large and small school buses is approximately 35,000 units. Approximately 84 percent of those are large and 16 percent are small.

In the FRE for the November 1998 final rule, the estimated costs for small school buses were derived as follows. As discussed above, 21 states and the District of Columbia currently require small school buses to comply with the joint strength requirements of Standard No. 221. Sales within those jurisdictions represent 35 percent of small school bus sales. NHTSA estimates that the average cost of bringing body panel joints on 65 percent (@($414) joint strength upgrade) of the small school buses and MAPs on 100 percent (@($74) MAP redesign) of the small school buses into compliance with Standard No. 221 will be $343 per vehicle. (0.65($414) + 1.00($74) = $343.) The total annual consumer cost for implementing the terms of this final rule for small school buses, therefore, is estimated to be $1,920,800. ($343 × 16% of 35,000 school buses.) These costs are based on optional equipment costs and may be overstated when required on all vehicles.

As noted above, the agency estimated that the average cost per large school bus resulting from the November 1998 final rule to be $222. Thus, the total annual consumer cost of limiting the MAP exclusion in large school buses would average approximately $6,526,800 ($222 × 84% of 35,000 school buses).

In the FRE for the November 1998 final rule, the total annual consumer cost to implement the amendments promulgated by this final rule for both large and small school buses is estimated to be $8,447,600.

NHTSA notes that the FRE for the November 1998 final rule did not factor into the calculation the costs (per bus or for the industry) involved in discontinuing the deduction of the total area of material removed for installation of fasteners (i.e., holes drilled for installation of rivets or screws) in calculating the tensile strength of each joined component. In this final rule, we have reinstated the deduction of the total area of material removed for installation of fasteners. Therefore, since, in this final rule, manufacturers may continue to deduct the total area of material removed, there is no change in the calculation of costs resulting from this final rule.

In the FRE for the November 1998 final rule, NHTSA stated its belief that the provisions in the November 1998 final rule will reduce 6 to 46 minor-to-serious injuries (AIS 1–3) annually. It is estimated that 5 to 33 AIS 1–3 laceration-type injuries will be reduced on large school buses due to the narrowing of the MAPs requirements. It is also estimated that the injury reduction for small school buses will be 0 to 3 AIS 1–3 laceration-type injuries and 1 to 10 AIS–3 fracture-type injuries. The methodology used to obtain these benefits can be found in the Final Regulatory Evaluation available in the docket.

This estimate of injury reduction is unchanged by the issuance of this final rule; response to petitions for reconsideration.

B. Regulatory Flexibility Act

NHTSA has also considered the impacts of this final rule under the Regulatory Flexibility Act. For the following reasons, I certify that the amendments will not have a significant economic impact on a substantial number of small entities.

The Regulatory Flexibility Act of 1980 (Pub. L. 96–354) requires each agency to evaluate the potential effects of its rules on small businesses, small organizations, and small governmental jurisdictions. The small businesses and organizations most likely to be affected by this final rule are: (1) School bus manufacturers; (2) school bus dealers and distributors; and (3) public and private school bus transportation owners and operators.

The Small Business Administration (SBA) defines a bus manufacturer with fewer than 500 employees as a small business (13 CFR part 121). Using that definition, the agency believes that many of the school bus manufacturers qualify as small businesses. As discussed above, most bus manufacturers known by NHTSA to build small school buses currently offer small school buses with complying body panel joints as an option. The manufacturers produce these vehicles to accommodate the 21 states and the District of Columbia which require that all school buses comply with Standard No. 221. NHTSA believes, therefore, that, as was the case for the November 1998 final rule, this final rule will not require new manufacturing techniques or tooling to be used by school bus manufacturers in order to build school buses that comply with the requirements of Standard No. 221. Further, costs, as a percentage of the

total school bus manufacturing cost, will not increase from the November 1998 final rule. Thus, any impact on total school bus sales will be negligible. On balance, the agency anticipates little measurable impact on school bus manufacturers' revenue levels, profitability, or employment.

The SBA defines a motor vehicle retailer with less than $11,500,000 in annual receipts as a small business. There are approximately 465 school bus dealers and distributors in the United States. From 1991 to1996, an annual average of approximately 35,000 school buses were sold, representing an average of 75 buses per dealer. In order to reach the threshold of $11,500,000 in annual sales receipts, the average dealer would have to sell a much larger number (270) of large school buses annually, assuming a cost of $45,280 per unit. Thus, most school bus dealers are probably small businesses. Because there are no cost effects on manufacturers, the agency also anticipates little measurable impact on retailers' revenue levels, profitability, or employment, as a result of this final rule.

NHTSA has no evidence that this final rule will have a ''significant economic impact'' on public and private school bus transportation owners and operators, small school districts, or other small school bus purchasers. As discussed above, this final rule will not increase manufacturing costs on school bus manufacturers. Therefore there would be no additional manufacturing costs that would be passed on to school bus purchasers.

C. Paperwork Reduction Act

In accordance with the Paperwork Reduction Act (44 U.S.C. 3501 *et seq.*), the agency notes that there are no collection of information requirements associated with this final rule. Nothing in this final rule imposes a recordkeeping or filing requirement on any manufacturer or any other party. For this reason, we discuss neither electronic recordkeeping nor electronic filing nor do we discuss a fully electronic filing option by October 2003.

D. National Environmental Policy Act

NHTSA has analyzed this final rule for the purposes of the National Environmental Policy Act. The agency has determined that implementation of this action will not have any significant impact on the quality of the human environment.

E. Executive Order 13132, Federalism

Executive Order 13132 requires us to develop an accountable process to ensure ''meaningful and timely input by State and local officials in the development of regulatory policies that have federalism implications.'' ''Policies that have federalism implications'' is defined in the Executive Order to include regulations that have ''substantial direct effects on the States, on the relationship between the national government and the States, or on the distribution of power and responsibilities among the various levels of government.'' Under Executive Order 13132, we may not issue a regulation with Federalism implications, that imposes substantial direct compliance costs, and that is not required by statute, unless the Federal government provides the funds necessary to pay the direct compliance costs incurred by State and local governments, or unless we consult with State and local officials early in the process of developing the proposed regulation. We also may not issue a regulation with Federalism implications and that preempts State law unless we consult with State and local officials early in the process of developing the proposed regulation.

This final rule; response to petitions for reconsideration would not have substantial direct effects on the States, on the relationship between the national government and the States, or on the distribution of power and responsibilities among the various levels of government, as specified in Executive Order 13132. The reason is that this final rule applies to manufacturers of motor vehicles or motor vehicle equipment, and not to the States or local governments. Thus, the requirements of Section 6 of the Executive Order would not apply.

F. Civil Justice Reform

This final rule does not have any retroactive effect. Under 49 U.S.C. 30103(b), whenever a Federal motor vehicle safety standard is in effect, a state or political subdivision may prescribe or continue in effect a standard applicable to the same aspect of performance of a motor vehicle only if the standard is identical to the Federal standard. However, the United States Government, a state or political subdivision of a state may prescribe a standard for a motor vehicle or motor vehicle equipment obtained for its own use that imposes a higher performance requirement than that required by the Federal standard. 49 U.S.C. 30161 sets forth a procedure for judicial review of final rules establishing, amending or revoking Federal motor vehicle safety standards. A petition for reconsideration or other administrative proceedings is not required before parties may file suit in court.

G. Unfunded Mandates Reform Act of 1995

The Unfunded Mandates Reform Act of 1995 requires agencies to prepare a written assessment of the costs, benefits and other effects of proposed or final rules that include a Federal mandate likely to result in the expenditure by State, local or tribal governments, in the aggregate, or by the private sector, of more than $100 million annually (adjusted for inflation with base year of 1995). The agency has determined that this final rule will not result in the expenditure by State, local or tribal governments, or by the private sector of $100 million annually.

H. Executive Order 13045 (Economically Significant Rules Affecting Children)

Executive Order 13045 (62 FR 19885, April 23, 1997) applies to any rule that: (1) Is determined to be ''economically significant'' as defined under E.O. 12866, and (2) concerns an environmental, health or safety risk that NHTSA has reason to believe may have a disproportionate effect on children. If the regulatory action meets both criteria, we must evaluate the environmental health or safety risk that NHTSA has reason to believe may have a disproportionate effect on children, and explain why the planned regulation is preferable to other potentially effective and reasonably feasible alternatives considered by us.

Since this final rule is not ''significant'' and since it does not concern any environmental, health or safety risk with a disproportionate effect on children, E.O. 13045 does not apply.

I. National Technology Transfer and Advancement Act

Section 12(d) of the National Technology Transfer and Advancement Act (NTTAA) requires NHTSA to evaluate and use existing voluntary consensus standards [1] in its regulatory activities unless doing so would be inconsistent with applicable law (e.g., the statutory provisions regarding NHTSA's vehicle safety authority) or otherwise impractical. In meeting that requirement, we are required to consult with voluntary, private sector, consensus standards bodies. Examples

[2] Voluntary consensus standards are technical standards developed or adopted by voluntary consensus standards bodies. Technical standards are defined by the NTTAA as ''performance-based or design-specific technical specifications and related management systems practices.'' They pertain to ''products and processes, such as size, strength, or technical performance of a product, process, or material.''

of organizations generally regarded as voluntary consensus standards bodies include the American Society for Testing and Materials (ASTM), the Society of Automotive Engineers (SAE), and the American National Standards Institute (ANSI). If NHTSA does not use available and potentially applicable voluntary consensus standards, we are required by the Act to provide Congress, through OMB, an explanation of the reasons for not using the standards.

Because no voluntary consensus standards were applicable to the issues addressed in this final rule, we did not use any in the promulgation of this final rule.

J. Plain Language

Executive Order 12866 requires each agency to write all rules in plain language. Application of the principles of plain language includes consideration of the following questions:

—Have we organized the material to suit the public's needs?
—Are the requirements in the rule clearly stated?
—Does the rule contain technical language or jargon that is not clear?
—Would a different format (grouping and order of sections, use of headings, paragraphing) make the rule easier to understand?
—Would more (but shorter) sections be better?
—Could we improve clarity by adding tables, lists, or diagrams?
—What else could we do to make this rulemaking easier to understand?

If you have any responses to these questions, please include them in comments to the docket number specified in the heading of this notice.

K. Regulation Identifier Number (RIN)

The Department of Transportation assigns a regulation identifier number (RIN) to each regulatory action listed in the Unified Agenda of Federal Regulations. The Regulation Information Service Center publishes the Unified Agenda in April and October of each year. You may use the RIN contained in the heading at the beginning of this document to find this action in the Unified Agenda.

List of Subjects in 49 CFR Part 571

Motor vehicle safety, Reporting and recordkeeping requirements, Tires.

In consideration of the foregoing, the final rule published November 5, 1998 (63 FR 59732) and amended and delayed March 6, 2000 (65 FR 11751), and delayed again April 20, 2001 until June 1, 2002 (66 FR 20199) is withdrawn, and 49 CFR part 571 is amended as follows:

PART 571—FEDERAL MOTOR VEHICLE SAFETY STANDARDS

1. The authority citation for part 571 continues to read as follows:

Authority: 49 U.S.C. 322, 30111, 30115, 30117, and 30166; delegations of authority at 49 CFR 1.50.

2. Section 571.221 is amended by revising S3; revising the definitions of ''body panel joint'' and ''bus body'' in S4; adding, in alphabetical order, the definitions of ''maintenance access panel'', ''passenger compartment'' and ''serviceable component'' to S4; and revising S5 and S6 to read as follows:

§ 571.221 Standard No. 221, School Bus Body Joint Strength.

* * * * *

S3. Application. This standard applies to school buses.

S4. Definitions.

Body panel joint means the area of contact or close proximity between the edges of a body panel and another body component, including but not limited to floor panels, and body panels made of composite materials such as plastic or plywood, excluding trim and decorative parts which do not contribute to the strength of the bus body, members such as rub rails which are entirely outside of body panels, ventilation panels, components provided for functional purposes, and engine access covers.

Bus body means that portion of a bus that encloses the bus occupant space, including the floor, but excluding the bumpers and chassis frame and any structure forward of the passenger compartment.

* * * * *

Maintenance access panel means a body panel which must be moved or removed to provide access to one or more serviceable component(s).

Passenger compartment means space within the school bus interior that is between a vertical transverse plane located 762 mm in front of the forwardmost passenger seating reference point and including a vertical transverse plane tangent to the rear interior wall of the bus at the vehicle centerline.

Serviceable component means any part of the bus, of either a mechanical or electrical nature, which is explicitly identified by the bus chassis and/or body manufacturer in the owner's manual or factory service manual as requiring routine maintenance actions at intervals of one year or less. Tubing, wires and harnesses are considered to be serviceable components only at their attachments.

S5 Requirements.

S5.1 Except as provided in S5.2, each body panel joint, including small, curved, and complex joints, when tested in accordance with the procedure of S6, shall hold the body panel to the member to which it is joined when subjected to a force of 60 percent of the tensile strength of the weakest joined body panel determined pursuant to S6.2.

S5.1.1 Body panels attached to each other shall have no unattached segment at the joint longer than 203 mm.

S5.2 Exclusions

S5.2.1 The requirements of S5.1 do not apply to—

(a) Any interior maintenance access panel or joint which lies forward of the passenger compartment.

(b) Any interior maintenance access panel within the passenger compartment that does not exceed 305 mm when measured across any two points diametrically on opposite sides of the opening.

(c) Trim and decorative parts which do not contribute to the strength of the joint, support members such as rub rails which are entirely outside of body panels, doors and windows, ventilation panels, and engine access covers.

S6 Procedure

S6.1 Preparation of the test specimen.

S6.1.1 If a body panel joint is 203 mm or longer, cut a test specimen that consists of any 203 mm segment of the joint, together with a portion of the bus body whose dimensions are those specified in Figure 1, so that the specimen's centerline is perpendicular to the joint at the midpoint of the joint segment. Where the body panel joint is not fastened continuously, select the segment so that it does not bisect a spot weld or a discrete fastener. Support members which contribute to the strength of a body panel joint, such as rub rails on the outside of body panels or underlying structure attached to joint members, shall remain attached to the test specimen, except that material may be removed from the support members as necessary to clear the gripping areas of the joint members being tested.

S6.1.2 If a joint is less than 305 mm long, cut a test specimen with enough of the adjacent material to permit it to be held in the tension testing machine specified in S6.3.

S6.1.3 Prepare the test specimen in accordance with the preparation procedures specified in the 1989 edition of the Annual Book of American Society for Testing and Materials (ASTM) Standards.

S6.2 *Determination of minimum allowable strength.* For purposes of determining the minimum allowable joint strength, determine the tensile strengths of the joined body components as follows:

(a) If the mechanical properties of a joint component material are specified by the ASTM in the 1989 Annual Book of ASTM Standards, the lowest value of that material's thickness and tensile strength per unit of area shown in that source shall be used.

(b) If the mechanical properties of a material are not specified by the ASTM in the 1989 Annual Book of ASTM Standards, determine its tensile strength by cutting a sheet specimen from outside the joint region of the bus body in accordance with Figure 1 of E 8–89 Standard Test Methods of Tension Testing of Metallic Materials, in Volume 03.01 of the 1989 Annual Book of ASTM Standards, and by testing it in accordance with S6.3.

(c) The cross sectional area of material removed to facilitate the installation of fasteners shall be subtracted from the cross-sectional area of the panel in the determination of the tensile strength of the weakest joined body panel.

S6.3 Strength Test.

S6.3.1 The joint specimen is gripped on opposite sides of the joint in a tension testing machine in accordance with the 1989 Annual Book of ASTM Standards.

S6.3.2 Adjust the testing machine grips so that the applied force on the joint is at 90 degrees plus or minus 3 degrees from the joint centerline, as shown in Figure 1.

S6.3.3 A tensile force is applied to the specimen by separating the heads of the testing machine at any uniform rate not less than 3 mm and not more than 10 mm per minute until the specimen separates.

3. Figure 1 is revised to read as follows:

BILLING CODE 4910–59–P

FIGURE 1

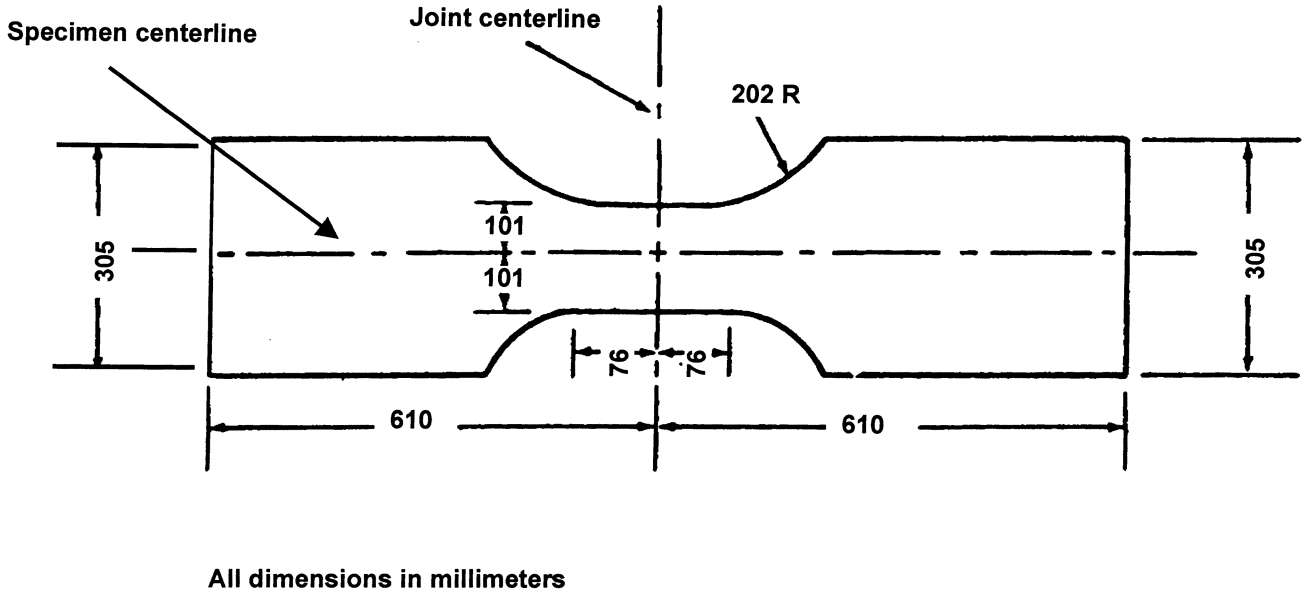

Issued on: December 5, 2001.

Jeffrey W. Runge,

Administrator.

[FR Doc. 01–30496 Filed 12–12–01; 8:45 am]

BILLING CODE 4910–59–C

DEPARTMENT OF TRANSPORTATION

National Highway Traffic Safety Administration

49 CFR Part 572

[Docket No. NHTSA–01–11111]

RIN 2127–AH02

Anthropomorphic Test Devices; 3-Year-Old Child Crash Test Dummy

AGENCY: National Highway Traffic Safety Administration (NHTSA), Department of Transportation.

ACTION: Final rule; response to petitions for reconsideration.

SUMMARY: On March 22, 2000, NHTSA published a final rule adding a new, more advanced 3-year-old child dummy to the regulation for Anthropomorphic Test Devices. Four organizations filed petitions for reconsideration of this rule. In response to these petitions, this document makes several minor changes to the final rule, including: Slightly raising the limit on the peak forces that occur in the transition compression zone referenced in calibration tests for the dummy's thorax response; revising the impact probe definition to include provisions for mounting suspension hardware if a cable system is used to suspend and guide the pendulum for impacts, to adopt a lower minimum mass moment of inertia, and to clarify the specification for free air resonant frequency; revising specifications in several drawings for the fabrication of load cells; and correcting several minor specification errors in these drawings. This document also denies a request to add a provision for post-test calibration of the dummy.

DATES: The amendment is effective on January 14, 2002.

Petitions for reconsideration of the final rule must be received by January 28, 2002.

ADDRESSES: Petitions for reconsideration should refer to the docket number of this document and be submitted to: Administrator, Room 5220, National Highway Traffic Safety Administration, 400 Seventh Street, SW., Washington, DC 20590.

FOR FURTHER INFORMATION CONTACT: For nonlegal issues: Stan Backaitis, Office of Crashworthiness Standards (telephone: 202–366–4912). For legal issues: Deirdre R. Fujita, Office of the Chief Counsel (202–366–2992). Both can be reached at the National Highway Traffic Safety Administration, 400 Seventh St., SW, Washington, DC 20590.

SUPPLEMENTARY INFORMATION:

Table of Contents

I. Background
II. Issues
a. Section 572.144 Thorax assembly and test procedure
b. Section 572.145 Torso flexion test procedure
c. Section 572. 146(a) Test probe for thoracic impacts
d. Section 572.146(l)(2) Instrumentation filter classes
e. Changes to drawings
f. Request to add provision for post-test calibration
g. Availability of drawings and PADI document
III. Rulemaking Analyses and Notices
a. Executive Order 12866 (Regulatory Planning and Review) and DOT Regulatory Policies and Procedures
b. Regulatory Flexibility Act
c. Executive Order 13132 (Federalism)
d. Executive Order 13045
e. Executive Order 12778
f. National Environmental Policy Act
g. Paperwork Reduction Act
h. National Technology Transfer and Advancement Act
i. Unfunded Mandates Reform Act

I. Background

On March 22, 2000, NHTSA published a final rule amending the regulation for Anthropomorphic Test Devices (49 CFR part 572), by adding specifications and calibration requirements for a new, advanced 3-year-old child dummy (65 FR 15254; docket number 2000–7051). The new dummy, part of the family of Hybrid III test dummies, is more representative of children than the existing 3-year-old child test dummy in Part 572, and allows the assessment of the potential for more types of injuries in automotive crashes. The new dummy is used to evaluate the effects of air bag deployment on out-of-position children, and can provide a fuller evaluation of the performance of child restraint systems in protecting young children. The new dummy is defined in part 572 subpart P (Sections 572.140–572.146).

The specifications for the Hybrid III type 3-year-old test dummy (hereinafter referred to as the H–III3C dummy) consist of three elements. First, there is a drawing package that shows the component parts, the subassemblies, and the assembly of the complete dummy. The drawing package also defines materials and, where practical, material treatment processes for all the dummy's component parts, including the dummy's crash sensors and their location and orientation in the dummy. Second, there is a manual containing disassembly, inspection, and assembly procedures, and a dummy parts list.

Third, there are the impact performance criteria and associated test procedures. These are specified to serve as calibration checks so as to assure the uniformity of the dummy's kinematics and impact response, and to reveal possible functional deficiencies from previous use. The tests address head, neck, and thorax impact responses and assess the resistance of the lumbar spine-abdomen region to upper torso flexion motion.

In addition, the final rule adopted generic specifications for all of the dummy-based sensors. For dummies incorporated into Part 572 through the 1990's, the agency specified sensors by make and model. However, the agency concluded that that approach was unnecessarily restrictive and limited innovation and competition. Accordingly, the final rule for the dummy, and those for all new dummies as of year 2000, specified sensors primarily by performance characteristics, and by their intended geometry, alignment and method of attachment within the dummy (see, NHTSA technical report ''Development and Evaluation of the Hybrid III 3-year-old Child Dummy'' (December 1998), Docket No. 99–5032).

NHTSA received petitions for reconsideration of the rule from First Technology Safety Systems (FTSS), Toyota Motor Corporation (Toyota); the Alliance of Automobile Manufacturers (Alliance) and Robert A. Denton, Inc. (Denton). The petitioners generally supported adopting the new dummy into Part 572, but believed that some technical issues, and one related to the agency's enforcement policy, had to be resolved. To support its suggested revisions, FTSS attached to its petition extracts from the Society of Automotive Engineers (SAE) Dummy Test Equipment Sub-Committee (DTES) meeting minutes pertaining to DTES's evaluation of the H–III3C dummy over the past several months. Similarly, the Alliance stated that its discussion of the calibration procedures of the final rule was based on the DTES's evaluation of the specifications of the rule and other data.

NHTSA has evaluated the petitions and is responding to the suggestions in this document. The agency is also correcting minor errors in the final rule and dummy drawings that we discovered during the review of these petitions.

II. Issues

a. Section 572.144 Thorax Assembly and Test Procedure

Section 572.144(b)(1) limited the peak force within a specified ''transition compression zone'' because excessively

large force, or acceleration, spikes in that zone might be indicative of deficiencies in the chest structure. The agency stated in the preamble to the final rule that, based on an analysis of the H–III3C dummy's thorax responses, statistically, the peak force of a well-functioning dummy in the transition compression zone of the rib cage could be as high as 860 N. Accordingly, the final rule specified an 860 N peak force limit for the transition compression zone bounded between 12.5 mm and 32 mm of sternum deflection.

The Alliance questioned the need for limiting the peak allowable thorax force, ''as it does not make the dummy response fit better into the biomechanical corridor.'' FTSS requested that the agency change the thoracic peak force requirement from 860 N to 910 N. The petitioner stated that, based on 34 DTES tests and applying a two standard deviation tolerance and rounding to the nearest 10 N, the peak force criterion should be 910 N instead of 860 N. The Alliance suggested that, if the agency retained the additional peak force specification, then the peak force criterion should be changed to 912 N based on the average (mean) of data, plus two standard deviations. These force values, the Alliance notes, were provided by DTES participants (FTSS, TRW and General Motors) following an April 14, 2000 DTES meeting.

NHTSA's Response: The basis for limiting the peak force was explained in the final rule. While this final rule increases the force limit in the transition compression zone, NHTSA confirms the rationale given in the rule for establishing a limit. A limit is needed to better ensure that the dummy's overall responses are reliable and repeatable. Forces within the transition compression zone should be limited because excessively large force spikes are indicative of potential deficiencies in the chest structure, which could affect the results of a compliance test. Biomechanical response corridors indicate that high peaks in the transition compression zone would not be humanlike and not likely to occur in a well functioning physical spring-mass system, which is representative of the dummy's rib cage. An excessively high peak force occurring in the transition compression zone would indicate a mechanical deficiency within the rib cage structure, even though the peak force requirement within the specified maximum allowable compression corridor is met. Accordingly, an additional upper force peak limit prior to reaching the specified maximum displacement corridor would provide significant assurance that the dummy's rib cage has human-like response and adequate structural integrity.[1]

The final rule limited the peak forces that occur in the transition compression zone to 860 N. The agency's analysis of SAE data and NHTSA data generated at the agency's Vehicle Research & Test Center (VRTC) indicated that statistically the peak force of a well-functioning dummy in the transition compression zone could be as high as 860 N. In its petition for reconsideration, FTSS submitted data from 34 tests that supported the petitioner's suggested force value of 912 N. After analyzing the data, NHTSA agrees that the recommended upper peak thorax force in the transition deflection corridor should be changed to a rounded value of 910 N. The 860 N value specified in the final rule was based on tests performed by the SAE using a higher mass pendulum, but at a slightly lower impact speed, than the pendulum and speed specified in the final rule. The ratio of impact energies between the Part 572 calibration test and the SAE biomechanical tests is 1.136. Because the Part 572 calibration test is performed at an approximately 13.6 percent higher energy level than the SAE biomechanical tests, an increase up to 13.6 percent of force in the transition zone is justified. Thus, petitioner FTSS's suggestion to increase the force level to 910 N in the transition zone is reasonable.[2] NHTSA has determined that 910 N is a sufficient and justifiable peak force limit. It is within 12.3 percent of the peak force value allowed at maximum sternum deflection, and well within the data dispersion of +2 standard deviations from the mean of 806 N rounded to the nearest 10 N.

b. Section 572.145 Torso Flexion Test Procedure

Section 572.145(c)(1) specifies that the temperature range for the torso flexion test is at 66° to 78° F (18.9° to 25.6° C). FTSS and the Alliance believed that the range was too wide and could cause test variability because of the sensitivity of the dummy's thorax and lumbar spine/abdomen materials to temperature. FTSS and the Alliance recommended reducing the temperature range to 69° to 72° F. FTSS stated that the narrower range would be consistent with other dummy component tests (see, e.g., 572.144(c)(2), thorax assembly test procedure).

NHTSA's Response: NHTSA is denying the request to change the specified torso flexion temperature range. After receiving the petitions for reconsideration of the final rule on the H-III3C dummy, the agency tested whether the dummy's torso flexion sensitivity is significantly affected by temperatures in the specified temperature range. NHTSA's Vehicle Research & Test Center performed two series of temperature sensitivity tests: one at a temperature range between 66° to 78° F and the other between 69° and 72° F. The change in average force needed to flex the dummy, normalized for the temperature range for each test series, showed very little difference in the two test series: 0.18 lbf/°F for the 66° to 78° F range and 0.17 lbf/°F for the 69° to 72° F range. Thus, the agency concludes, the torso flexion force is virtually unaffected by temperature variation within the specified range and thus should not be a significant factor having effects on crash test measurements, particularly given that the compliance tests are performed at a temperature range between 69° to 72° F. NHTSA has placed a copy of a memorandum in the docket (Docket No. NHTSA–2000–7051–7) documenting details and results of torso resistance to flexion vs. temperature sensitivity tests conducted by the agency in response to this petition.

[1] NHTSA limited the peak force measured during the sternum-to-spine displacement interval in response to a comment from TRC on the NPRM for the Hybrid III fifth percentile female dummy. TRC had stated that the thorax force response for that dummy included several peaks before it gets to the specified corridor, and asked for clarification of which of the forces should be considered and which should be disregarded. TRC had recommended that the final rule limit the peak force that occurs in the deflection interval between the first inertial spike and the peak force at the minimum/maximum required sternum displacement (transition zone) to a value 5 percent or less above the peak force measured within the required minimum/maximum compression corridor. NHTSA agreed with TRC that the initial force spike, occurring within 12.5 mm of impact, is an artifact of the inertial mass interaction between the impactor and the dummy. It has no biomechanical significance, and thus it is not an indicator of a bad ribcage. Thus, the final rule for the fifth percentile female adult dummy accommodated the existence of the initial data spike by limiting peak force measurements only to a specified sternum displacement after the initial force spike has occurred. Because the agency determined that the approach taken in that final rule constituted a good definition of the response force in the transition zone and provided control of the thorax force response levels, the final rule for the H–III3C dummy used the same approach in discounting the significance of the initial data spike. Accordingly, the final rule excluded consideration of force data from the first 12.5 mm of sternum compression and limited the peak allowable force after 12.5 mm (to 860 N).

[2] The increase in thorax force response by 50 N may result at its extreme in only an increase of chest acceleration of less than 1 g in compliance tests based on the upper torso-neck-and head weight of approximately 14 lb (50/4.448/14.00 = 0.8g).

c. Section 572.146(a) Test Probe for Thoracic Impacts

Concentric and Symmetric in Shape: Section 572.146(a) specified generic characteristics for the test probe for thoracic impacts. It specified, among other things, that the test probe ''shall be * * * concentric in shape, and symmetric about its longitudinal axis.''

The Alliance said that it believes that the requirements for concentricity and symmetry about the longitudinal axis ''are unrealistic since the pendulum is often fitted with velocity vanes, causing asymmetry.'' FTSS stated that the meaning of ''concentric in shape'' was unclear. FTSS believes that ''[c]oncentric means 'having the same center', but does not define the shape of an object'' and that, in any event, specifying concentricity was unnecessary. FTSS notes that NHTSA adopted the concentricity and symmetry requirements to locate the probe center of gravity (CG) on the longitudinal axis, passing through the center of the impacting face, and that the rule should therefore simply specify the CG location of the probe. Further, similar to the Alliance, FTSS stated that the addition of cable attachments and velocity vanes does not allow the probe to be symmetric in any one plane. FTSS thus suggested that a tolerance of 3.5 mm should be specified for locating the CG, such as by the statement: ''The probe center of gravity shall lie within 3.5 mm of the longitudinal axis passing through the center of the impacting face.''

NHTSA's Response: NHTSA agrees with the petitioners that the definition of the probe should include provisions for mounting velocity vanes, suspension hardware, and cable system if and when it is used to guide the pendulum for impacts. NHTSA agrees with the concerns about specifying concentricity and symmetry and has revised the test probe definition by removing the words ''* * * in shape and symmetric'' from the first sentence in ''571.146(a) and has added ''except for attachments'' to assure that attachments are not considered in evaluating the concentricity of the probe along the longitudinal axis. The sentence now reads: ''The test probe for thoracic impacts, except for attachments, shall be of rigid metallic construction and concentric about its longitudinal axis.''

Rather than itemizing all attachments, such as suspension hardware, suspension cables and velocity vanes, to specifications for concentricity, symmetry and dimensions, this rule specifies in a new paragraph in § 572.144(c)(7) that any attachments to the impactor (e.g., suspension hardware, suspension cables and velocity vanes) must not contact the dummy during the test.

The agency does not agree with FTSS that the CG offset from the longitudinal axis needs to be specified. To measure such an offset would be extremely difficult, and it would be virtually of no benefit to any user. The requirements in the final rule for moment of inertia in pitch and yaw and the specification of mass, as discussed immediately below, provide sufficient controls to assure stable kinematics during the probe's free flight and impact with the dummy.

Mass Moment of Inertia: Section 572.146(a) also specified that the probe must have a minimum mass moment of inertia 283 kg-cm^2 (0.25 lb-in-sec^2) in yaw and pitch about the CG of the probe, and a free air resonant frequency not less than 1000 Hz. The Alliance stated that it believes that NHTSA did not clearly explain the reason for these criteria. The Alliance stated that it could not determine the necessity of the criteria from data collected by the DTES following the April 2000 meeting. The Alliance further stated that, for thorax impact probes used at a number of test labs, the mass moments of inertia (MMI) values fell below the minimum requirement of 283 kg-cm^2. The petitioner said these probes were used to develop the data that formed the basis for the thorax calibration performance corridors of the final rule. The Alliance said that if NHTSA decides to retain the MMI specification, the impactor should be cylindrical since NHTSA had stated in a final rule for a previous dummy (fifth percentile female) that the ideal impactor is of cylindrical design, and that the following values should be specified: Mass 1.70 kg; MMI 138.4 kg-cm^2. FTSS stated that the specified values of MMI are arbitrary and that its thorax probe has a yaw MMI of 199 kg-cm^2 and pitch MMI of 201 kg-cm^2, which do not meet the specified criterion of 283 kg-cm^2. FTSS said that NHTSA presented no data to suggest that probes, such as those the petitioner uses, do not provide satisfactory performance.

NHTSA's Response: NHTSA defined the impactor in generic terms in response to industry comments on the NPRMs for both the 6-year-old and fifth percentile female dummies, stating that the impactor needed to be generic in definition and that the users desire to make them from building blocks, essentially, an assembly of multiple pieces. The commenters also requested that NHTSA not define the impactor by design. The agency believes that any impactor not defined by design to control its kinematics and response during impact, must be defined by engineering parameters, such as mass, stiffness, MMI and, if needed, CG location. As a result, the agency responded to the commenters' desire for a generic impactor and defined the impactor in engineering terms.

NHTSA notes that assembling impactors from multiple pieces may result in compositions with many forms and wide variations in the location of the CG, and the yaw and pitch MMI. These wide variations are evident in the Alliance's petition, in which the Alliance notes that its member companies have used different impactors with MMIs ranging from 122 to 572 kg-cm^2 (measured) and 138 to 199 kg-cm^2 (calculated).

To determine the effects on kinematics of low and high inertia impactors, in response to petitions for reconsideration of the final rules for the 6-year-old and fifth percentile female dummies, the agency studied the kinematics of impactors having low MMI and compared them with the kinematics of impactors having a much higher MMI. The evaluation revealed that low inertia impactors experienced considerable motion instability. In contrast, impactors with higher MMIs exhibited very stable free flight kinematics. This experiment shows that the use of impactors with low MMIs could lead to unstable kinematics. Inasmuch as the response of the dummy in calibration tests is used as a measure of the dummy's repeatability and objectivity, it is important that the impact probe kinematics not be a source of variability. (A discussion of NHTSA's evaluation of impact probes can be found at Docket No. NHTSA–00–6714–12.)

FTSS stated that its thorax probe has a yaw MMI of 199 kg-cm^2 and a pitch MMI of 201 kg-cm^2. We have determined that the FTSS measured MMI values reflect current industry practice, and, therefore, there are reasonably good grounds for their acceptance. In contrast, the agency believes that the calculated low MMI value of 138.4 kg-cm^2 suggested by the petitioner is considerably below the values of impactors currently used by the industry. The petitioner has not provided any evidence to support the validity of its suggestion. In a study related to moment of inertia specifications for impact probes, the agency found that a pendulum type impact probe must have at least 164 kg-cm^2 MMI value to assure stability during free flight and at impact with the dummy's sternum (ref. Technical Report, Docket No. NHTSA–1999–6714–12). Accordingly, the agency is

specifying, as the minimum, a measured MMI value of 164 kg-cm^2 (0.145 lb-in-sec^2), but not the calculated MMI of 138 kg-cm^2 (0.122 lb-in-sec^2) suggested by the Alliance. The 164 kg-cm^2 value was also cited by the Alliance in its May 15, 2000 submission to docket NHTSA–2000–7052–6. It should be noted that impactors with lower MMI than the inertia value specified in the final rule may produce motion instability and thus could create unreliable test results. In contrast, the impactors with a higher MMI exhibited very stable free flight kinematics. Accordingly, as a matter of caution, the agency is advising that test facilities conducting tests with impactors having a lower MMI value than the minimum specified in this rule, should exercise great care in the design of the impactor suspension and guidance systems to assure stable and consistent impact kinematics.

Mass (Weight) Distribution: Section 572.146(a) also specified that the test probe shall have a mass of 1.70 ± .01 [kilograms] kg (3.75 ± 0.02 (pounds)(lb)). The Alliance and FTSS believed that a weight tolerance of 10 grams is too small to be practically measured. The Alliance requested that the tolerance be increased to ±0.02 kg (±0.05 lb). FTSS recommended ±0.023 kg.

NHTSA's Response: NHTSA agrees that the tolerance of ± 0.02 lb might be difficult to achieve because some of the accelerometers used on the crash test equipment weigh as much as 0.02 lb while others are as low as 0.002 lb. The agency believes that the total impactor weight tolerance should, to the extent possible, take into account the weight differences between many possible types of accelerometers used on impactors. Accordingly, we agree with the Alliance recommendation to increase the overall weight tolerance to ± 0.02 kg (± 0.05 lb), which allows less than 3 percent variation in the overall weight of the impactor. The weight specification is also changed in Figure P4 of Part 572, Subpart P, titled ''Thorax Impact Test Set-Up Specifications.''

Effects of Attachments on Concentricity: Section 572.146(a) also specified that: ''No concentric portions of the impact probe may exceed the diameter of the impact face.'' Since the pendulum is often fitted with velocity vanes and cable attachments, the Alliance considered this requirement unrealistic. The Alliance recommended revising the test probe definition to: ''The primary test probe, less any additional hardware, for [body region] impacts shall be of rigid metallic construction, concentric in shape, and symmetric about its longitudinal axis.'' FTSS claimed that it does not know the meaning of ''concentric in shape.'' FTSS noted that necessary addition of cable attachments and velocity vanes means that the requirement cannot be met.

NHTSA Response: NHTSA agrees with the Alliance that addition of suspension hardward and velocity vanes would violate the specification that ''No concentric portions of the impact probe may exceed the diameter of the impact face.'' The agency's concern was that use of an unusually shaped impactor or attachments to it might cause other portions than the impact face to come into contact with the dummy during the impact, which may distort or modify the dummy's impact response. To overcome this concern and those of commenters that they would not be able to meet the concentricity requirements, we are limiting the impactor body's length at which it must not exceed the diameter of the impact face, for a minimum of 1 inch (25.4 mm) to the rear of the impact face. Also, to assure that attachments to the impactor do not contact the dummy during impact, we are including a specification in § 572.144(c)(7) that states that any attachments to the impactor, such as suspension hardware and impact vanes, must not contact the dummy during the test.

Probe Diameter Edge Radius: Another provision of § 572.146(a) specifies that the impacting end of the probe has a diameter face with a maximum edge radius of 12.7 mm (0.5 in). FTSS and the Alliance were concerned that specifying a maximum radius allows for smaller radii which may affect the probe's interaction with the dummy, resulting in differences in the initial contact area. Both petitioners recommended deleting the word ''maximum,'' so that the specification would read ''* * * diameter face with an edge radius of 12.7 mm (0.5 in).''

NHTSA's Response: NHTSA agrees with the concern that specifying a maximum radius without a minimum allows for smaller radii, which may affect the probe's interaction with the dummy, resulting in differences in the initial contact area. Also, if a minimum radius were not specified, at the extreme of the specification, the edge of the impactor face could be a sharp edge. If the alignment of the probe face to the dummy's thorax were not perfect, such an edge could produce significant variability in the dummy's impact response. However, we believe that simply deleting ''maximum'' could raise questions about permissible variations in edge radius from 12.7 mm (0.5 in) in either direction. We see no need to either control the impactor's edge to a great precision or to allow it to be sharp. We find that a commercial tolerance of ±0.1 inches would have minimal effects on the surface area of the impactor, and would preclude use of impactors with a sharp edge. Accordingly, to preclude the potential of large variations, we are specifying a min/max edge radius of 7.6/12.7 mm (0.3/0.5 in). This radius is based on dimensional tolerance of ±0.1 in from the mean of 10.2 mm (0.4 in) as a practical allowance for manufacturing and inspection, without any effects on the performance of the impact probe.

Free Air Resonant Frequency: Section 572.146(a) specifies that the test probe must have a free air resonant frequency not less than 1000 Hz.

In its petition for reconsideration of the requirement, FTSS stated:

> Section 572.146(a) establishes a requirement for the free air resonant frequency without specifying the methods to measure this frequency or with a rationale for the need of this requirement. FTSS [First Technology] has analyzed the probes used in its calibration laboratories, and the results show the first resonant modes of these probes are bending modes, which causes a lateral translation at the accelerometer location. Typical accelerometers have less than 3% cross-axis sensitivity, so if a probe was excited during a dummy test (which is unproven), the affect [sic] on the acceleration signal would be minimal. It may be more appropriate to specify a 1000Hz resonant frequency limit in the sensitive axis of the accelerometer. * * * Although the FTSS H3–3 thorax probe meets the 1000Hz minimum requirement, we still do not agree with this specification. We therefore petition the mass moment of inertia and free air resonance response criteria should be held in abeyance for a period of six months to allow time to develop reasonable and rational criteria for the probes and to develop and manufacture re-designed probes as necessary. * * *

The Alliance raised similar concerns and also suggested deleting the free air resonance frequency requirement until data are available that justify the need for the requirement.

NHTSA's Response: Commentors on the NPRMs for the 6-year-old and fifth percentile adult female dummies expressed a desire for generic impactor specifications to allow users the freedom to design impactors in a variety of ways, including constructing them from building blocks. As a result, the agency developed a generic engineering specification and inserted it in the final rules for these dummies. For the sake of consistency, the agency carried over this ''generic'' specification into the final rule for the H–III3C dummy.

The resonant frequency is a vital part of the generic specification of an impactor. It is necessary for three reasons: (1) Because the intent of users is to build a non-defined shape and multiple piece impactor of unknown

material, the natural resonant frequency of the impactor is a reliable indicator to assure that the impactor has sufficient structural rigidity, is capable of repeatable responses, and will not distort the responses produced by the dummy; (2) the specification will assure that a multiple piece impactor will not produce separate interactions between its constituent parts; and (3) the specification will ensure that the mounting structure for the accelerometer is sufficiently rigid and will not affect the accelerometer readings.

We agree with the FTSS argument that an impactor can have vibrations in several modes: The first mode of resonance is the bending mode of the probe transverse to the longitudinal axis and the second mode of resonance is the vibration along the longitudinal axis. We concur with the FTSS suggestion that it would be more appropriate to clarify the current specification by adding to the impactor definitions a note that the 1000 Hz minimum resonant frequency is limited only to the direction of the longitudinal axis of the impactor, rather than in any direction. The agency also agrees that a signal of low cross axis sensitivity accelerometer, whose sensitive axis is aligned with the longitudinal axis of the impactor, will be minimally affected by impactor vibrations in the first bending mode. To illustrate how the agency measures the free air second mode resonant frequency of an impactor, we have described a procedure in Docket No. NHTSA–6714–14 and have inserted it in the PADI (Procedures for Assembly, Disassembly and Inspection) document for this dummy.

However, NHTSA does not agree with the Alliance comment that the resonance specification is unnecessary. A multiple piece impact probe, if improperly constructed, may contain a series of resonances along its longitudinal axis which could affect the accelerometer measurement. The 1000 Hz minimum specification would preclude a user from using such a probe.

d. Section 572.146(l)(2) Instrumentation Filter Classes

FTSS and the Alliance stated that the rule did not specify a filter class for rotary potentiometers that some users employ in the pendulum neck test. They suggested adding a new paragraph (iv) to § 572.146(l)(2) to specify: ''(iv) Rotation potentiometer—Class 60''.

NHTSA's Response: In the regulatory text describing the H–III3C dummy, NHTSA did not specify use of mechanical test fixtures, including potentiometers to measure head rotation in the specified head-neck tests. The agency believed there were several methods for measuring this, and the method suggested in the regulatory text was not essential for the intended purpose. Subsequently, however, the Alliance noted in petitions for reconsideration of the final rules on the 6-year-old and fifth percentile adult female dummies that industry users have concluded that the CFC Channel Class 60 specification is appropriate if a potentiometer is used to measure head rotation. In addition, the agency's Vehicle Research and Testing Center (VRTC) used the CFC 60 to filter head rotations when rotary potentiometers are used in head-neck pendulum tests. VRTC review of raw data showed absence of high frequency signals which would obviate the need for a CFC specification greater than 60. In view of this information, NHTSA has no objection to specifying Channel Class 60 for this application if a potentiometer were used for measuring head rotation.

e. Changes to Drawings

This final rule changes six drawings of the drawing package for the H–III3C dummy in response to petitions for reconsideration and corrects minor errors and omissions in six other drawings that the agency uncovered on its own. Robert A. Denton, Inc. (Denton), a manufacturer of load cells used in crash dummies, petitioned to revise several specifications in the drawings of the load cells used in the dummy. The six drawings were: SA572–S17–L&R; SA572–S18; SA572–S19; SA572–S20; SA572–S21; and SA572–S22. Denton believed that each of the drawings had two problems. The first of these related to the output at capacity. The second related to a material specification requiring that the load cells be made of steel or similar material. NHTSA will address both of these issues below. Denton also pointed out other minor specification errors on drawings SA572–S18, SA572–S19, SA572–S20, and SA572–S21, which are addressed later in this section of the preamble. In its petition for reconsideration, the Alliance stated that it ''supports'' Denton's petition.

Load Cell Output at Capacity: The drawings had a specification that the output at capacity of the load cells must be 1.0 mV/V MIN. Denton requested that specification be changed to 0.75 mV/V. Denton stated that many of the load cells it has been producing for years have nominal 1.0 mV/V channels. However, the petitioner stated, due to manufacturing variations, load cells could have a sensitivity above or below the 1.0 mV/V level. Denton also believed that NHTSA has not provided data to justify the 1.0 mV/V specification. Denton stated that since load cells with outputs slightly below 1.0 mV/V have functioned satisfactorily for many years, the requirement should be changed to ''0.75 mV/V MIN.''

NHTSA's Response: NHTSA agrees to the suggested change. The agency has reviewed its data from VRTC and has determined that a minimum output of 0.75 mV/V will not affect the performance and quality of the resulting data channel or the quality and accuracy of the recorded data.

Load Cell Material: The drawings included a material specification indicating that the load cells are made of ''steel or similar material.'' Denton requested that the material specifications be removed from all load cell drawings. Denton questioned whether there was any point to specifying the material used to build load cells, as long as the load cells meet the functional, size and weight specifications listed in the drawings. The petitioner stated that most of the load cells used in the H–III3C dummy are made primarily from aluminum and asked whether NHTSA would consider aluminum to be a ''similar material'' to steel. Denton also asked: ''even if part of the load cell is steel, covers are usually made of aluminum or brass. Sometimes other materials are used internally to the load cells. Does this violate the material specification on the drawing?'' Denton stated that if the agency wanted to retain the material specification, the specification should be corrected (the petitioner did not describe the nature of the corrections).

NHTSA's Response: NHTSA does not agree with Denton's recommendation to remove the material specifications. Because the load cells have to be mounted within the structural part of the test dummy that interlinks the dummy's major body segments, load cells maintain a geometric relationship between the major body segments. Accordingly, the rigidity, strength and response of such connections must be compatible with the rest of the dummy. However, NHTSA does believe that specifying a specific load cell material may be too restrictive. The agency is aware that existing load-bearing structures of a load cell are based on metals with a high modulus of elasticity, such as aluminum and steel. As a result, instead of specifying one type of metal for a load cell, NHTSA is revising the load cell drawings to require that the load-bearing structure of the load cell, including provisions for mounting, be of metal or metal alloys. Further, the agency is specifying in the

drawings that non-load bearing parts of the load cell, internally and/or externally, may be made of any material suitable for the intended use, providing they do not interfere with the performance of the load cell.

Other Errors With Drawings SA572–S18, SA572–S19, SA572–S20, and SA572–S21

1. Drawing SA572–S18: Drawing SA572–S18 listed the thermal sensitivity specification as 60° to 90°F. Denton stated that this was an error, and that the correct specification was 60° to 80°F. NHTSA agrees that the correct specification is 60° to 80°F.

2. Drawing SA572–S19: Denton reported five errors in drawing SA572–S19. First, the drawing specified a load cell weight of 0.52 lb maximum, which included a retaining washer, flat head cap screws, and 8 inches of cable. Denton stated that this weight was too low, and that existing load cells will be obsoleted by this specification since the existing load cells have a nominal weight of 0.53 lb with the specified hardware and cable. Denton requested NHTSA to change the specification in any one of three possible ways: (a) Change the weight specification to 0.55 lb max (Denton stated this would ''match the NPRM''); (b) change the notes on the drawing to indicate that no cable is included; or (c) change the notes to indicate that the retaining washer and flat head cap screws are not included.

NHTSA agrees that the 0.52 lb maximum is too low and has decided to change the weight specification to 0.55 lb maximum (which is option (a) suggested by Denton).

Second, drawing SA572–S19 also showed the height specification of 1.250 inches as 31.37 mm. Denton pointed out that the correct metric equivalent for 1.250 inches is 31.75 mm. The agency has made the correction.

Third, the drawing showed the 120 lb-in torque specification on the ¼-20 x ⅝″ socket head cap screws used to attach the load cell to the neck as 16.56 N-m. Denton stated that the correct metric equivalent to 120 lb-in is 13.56 N-m. NHTSA has made the correction.

Fourth, drawing SA572–S19 showed the bolt circle diameter for the holes used to attach the load cell to the dummy neck as 2.177 inches (55.295 mm). Denton said that the load cells use a bolt circle diameter of 2.125 inches (53.98 mm), which matches the bolt pattern in the mating neck plates 210–2060 and 210–2030. NHTSA agrees and has changed the bolt circle diameter from 2.177 in (55.295 mm) to 2.125 in (53.98 mm).

Fifth, the drawing showed the counterbore for the holes used to attach the load cell to the neck as 0.438 inch diameter with a depth of 1.00 inches. Denton stated that existing load cells, used for both the H–III3C dummy and ''the older 3-Year-Old airbag dummy,'' actually use a bore diameter of ⅜ inch with a depth of 0.91 inches. Denton stated, ''Using a 0.438 inch diameter counterbore will make the load cell much more difficult and expensive to manufacture, due to several issues internal to the load cell.'' (The issues were not specifically identified.) Denton requested that the counterbore diameter be specified as 0.37 minimum with a depth of 1.01 maximum. NHTSA agrees and has made the corrections.

3. Drawing SA572–S20: Denton stated that drawing SA572–S20 contains two errors. First, Denton stated that the drawing showed the height of the load cell specified to a four decimal place dimension (1.5000 inches), which could be construed to imply a ±0.0005 inch tolerance. Denton states: ''That tight of a tolerance is not necessary for this application, is difficult to manufacture, and may obsolete many existing load cells.'' The petitioner requested that the specification be changed to a three decimal place dimension, 1.500 inches, which will have a default tolerance of ±0.005 inches. Second, Denton reported a typographical error in the thermal sensitivity specification. The range should be 15.6° to 26.7°C, not 15.6° to .7°C.

NHTSA agrees that the 1.5000 inches height specification is unnecessarily restrictive. Accordingly, the agency is changing the height specification to 1.500 inches. The agency also agrees that the metric range as well as the typographical error in the temperature sensitivity specification should be corrected as petitioner suggested.

In addition, during our review, we noticed that the diameter for the four through-holes for the mounting of the load cell to the lumbar spine was not specified. We measured the diameter of the through-holes and confirmed with the manufacturer that the hole diameters are 0.257 inch on the flange and in the body of the load cell. The holes in the body of the load cell are counterbored from the bottom with a diameter of 0.375 inch to a depth of 1.13 inches. A new drawing SA572–S20 incorporates this technical correction.

4. Drawing SA572–S21: This drawing specified that the center hole in the load cell is ''0.500 diameter thru.'' Denton stated that this will obsolete all existing load cells. In existing load cells, Denton reported, the hole diameter changes several times as the hole passes through the load cell. In addition, Denton states that the minimum diameter of the through-hole is 27/64 (0.422) inch. Thus, Denton requested that the diameter be changed to 0.410 inch minimum to allow for clearance to the mating part. This modification would not obsolete existing load cells. The petitioner stated that ''Since the dummy part which is inserted through the hole has a 0.390 inch diameter, the load cell [with a 0.410 hole] will provide sufficient clearance.'' Petitioner also noted that ''[t]hese load cells have been in use for years throughout the world.''

NHTSA is revising the drawing to specify that the minimum diameter of the through-hole is 0.410 in. However, the drawing retains the specification of a maximum diameter, because not having a maximum hole diameter could result in excessively large through-holes. A very large hole within the load cell would permit large variations in the placement of the arm on the dummy=s shoulder, which could produce problems in test repeatability. Accordingly, the upper limit to the hole diameter of 0.50 inches is needed to avoid the arm mis-location problem.

During the agency's review of the drawings following publication of the March 22, 2000 final rule, the agency identified a need to define four holes in the body of the load cell that are used to attach the load cell to the dummy. The drawing showed neither hole dimensions nor their alignment. This was an oversight by the originator of the drawing. New drawing SA572–S21 corrects this oversight by adding to the body of the load cell the note ''four 10–24 unc threaded holes equally spaced on a bolt circle of 1.062.''

Other Minor Changes in Drawings to Correct for Missing and/or Misplaced Dimensions and/or Notes: Uncovered During the Agency Review Process: The following minor changes are also made to some of the drawings, to correct for missing and/or misplaced dimensions and/or notes. The agency realized the need for these changes during a review of the drawings that we conducted in response to the petitions for reconsideration.

1. Drawing 210–4510. Added in top view to the specification ''machined after weldment'' the words ''parallel to surface B.''

2. Drawing 210–4511–1. Added radius dimension R.12 to the top corners of the iliac spine on the left side of the view of drawing.

3. Drawing 210–3731. Added missing dimensions: .99 and 5.68 to locate the center of cut-out radius on the right and left hand sides of the bib, respectively,

and 2.75 diameter dimension to define the head of the bib.

4. Drawings SA572–S4, –S17, –S18, –S19, –S20, –S21, –S22, –S23, –S50 and ''S80. Changed single place dimensional tolerance from ±0.1 inch (2.54 mm) to ±0.1 inch (2.5 mm), to correct for metric equivalence.

5. Drawings SA572–S80. Corrected location of accelerometer mounting holes and added dotted lines where those holes are located in all views.

f. Request To Add Provision for Post-Test Calibration

Toyota and the Alliance requested that a post-test calibration of the dummy be included in the performance specifications. A post-test calibration is an assessment of whether the dummy conforms to NHTSA specifications after it has been used in a crash test. Toyota and the Alliance said that a post-test calibration is necessary to provide an objective check of the validity of the test dummy data acquired during the test, particularly if the crash test results in an apparent non-compliance. Toyota and the Alliance argued that without a post-test calibration, ''neither a vehicle manufacturer nor a NHTSA test contractor can determine whether an apparent vehicle non-compliance is due to a test dummy anomaly during a test.''

Toyota and the Alliance previously raised the issue of post-test calibration of dummies in their comments on NHTSA proposals to establish Hybrid III dummies for a fifth percentile female (H–III5F), a six-year-old child (H–III6C), and a 12-month-old child (CRABI). Historically, NHTSA has provided that the structural properties of a dummy satisfy the specifications set out in the applicable regulation in every respect both before and after its use in any test in a Federal motor vehicle safety standard. However, in the notice of proposed rulemaking for the H–III5F dummy, the agency decided against a post-test dummy calibration provision for the following reasons:

> NHTSA is concerned that the post-test calibration requirement could handicap and delay its ability to resolve a potential vehicle or motor vehicle equipment test failure solely because the post-test dummy might have experienced a component failure and might no longer conform to all of the specifications. On several occasions during the past few years, a dummy has been damaged during a compliance test such that it could not satisfy all of the post-test calibration requirements. Yet the damage to the dummy did not affect its ability to accurately measure the performance requirements of the standard. The agency is also concerned that the interaction between the vehicle or equipment and the dummy could be directly responsible for the dummy's inability to meet calibration requirements. In such an instance, the failure of the test dummy should not preclude the agency from seeking compliance action. Thus, NHTSA has tentatively concluded that removal of the post-calibration requirement would be in the public interest, since it would permit the agency to proceed with a compliance investigation in those cases where the test data indicate that the dummy measurements were not markedly affected by the dummy damage or that some aspect of vehicle or equipment design was responsible for the dummy failure.

(63 FR 46981, 46983, September 3, 1998).

The agency believes this reasoning remains valid. Further, in their comments on this rulemaking, the Alliance and Toyota have not produced any new information that would support the reversal of the decision not to include a post-test calibration provision. Thus, the agency is denying the Toyota petition and that part of the Alliance petition relating to the requirement.

g. Availability of Drawings and PADI Document

The drawings and specifications package and the Procedure for Assembly, Disassembly and Inspection (PADI) document referenced in this final rule are accessible for viewing and copying at the DOT Docket Management System office, Plaza 401, 400 Seventh St., SW., Washington, DC 20590, and are downloadable at DMS.DOT.GOV. Upon access of the website, click ''search,'' under Search click ''Search Form,'' under Agency click ''NHTSA,'' under Category click ''Rulemaking,'' under Subcategory click ''Crashworthiness Drawings and Test Equipment Specifications,'' then click on search and select the desired file. The drawings and specifications package and the PADI document are also available from reprographic Technologies, 9107 Gaither Rd., Gaithersburg, MD 20877, telephone (301) 419–5070.

III. Regulatory Analyses and Notices

a. Executive Order 12866 and DOT Regulatory Policies and Procedures

This rulemaking document was not reviewed by the Office of Management and Budget under EO 12866, ''Regulatory Planning and Review.'' The rulemaking action is also not considered to be significant under the Department's Regulatory Policies and Procedures (44 FR 11034, February 26, 1979). This document amends 49 CFR part 572 by making relatively minor changes to the design and performance specifications for a 3-year-old child dummy. This rule affects only those businesses which choose to manufacture or test with the dummy, in that the agency will only use dummies for compliance testing that meet all of the criteria specified in this rule. It affects vehicle and air bag manufacturers only insofar as they choose to test with a dummy that meets all of the criteria specified in the agency's regulation. It may indirectly affect child restraint manufacturers in the same manner, if the dummy is incorporated into the child restraint system standard. (NHTSA anticipates publishing an NPRM in the near future that proposes to adopt the dummy into agency compliance tests.) Even then, the amendments made by this rule for the most part correct or clarify existing specifications for the dummy and will not have a significant impact on dummy manufacturers, or on manufacturers of motor vehicles, air bags or child restraints. Because the economic impacts of this final rule are minimal, no further regulatory evaluation is necessary.

b. Regulatory Flexibility Act

Pursuant to the Regulatory Flexibility Act (5 U.S.C. 601 *et seq.*, as amended by the Small Business Regulatory Enforcement Fairness Act (SBREFA) of 1996), whenever an agency is required to publish a notice of rulemaking for any proposed or final rule, it must prepare and make available for public comment a regulatory flexibility analysis that describes the effect of the rule on small entities (i.e., small businesses, small organizations, and small governmental jurisdictions). However, no regulatory flexibility analysis is required if the head of an agency certifies the rule will not have a significant economic impact on a substantial number of small entities. SBREFA amended the Regulatory Flexibility Act to require Federal agencies to provide a statement of the factual basis for certifying that a rule will not have a significant economic impact on a substantial number of small entities.

I have considered the effects of this rulemaking action under the Regulatory Flexibility Act (5 U.S.C. 601 *et seq.*) and certify that this rule will not have a significant economic impact on a substantial number of small entities. This rule only clarifies or corrects specifications for the H–III3C dummy. The rule does not impose or rescind any requirements for anyone. The Regulatory Flexibility Act does not, therefore, require a regulatory flexibility analysis for this action.

c. Executive Order 13132 (Federalism)

Executive Order 13132 requires NHTSA to develop an accountable

process to ensure ''meaningful and timely input by State and local officials in the development of regulatory policies that have federalism implications.'' ''Policies that have federalism implications'' is defined in the Executive Order to include regulations that have ''substantial direct effects on the States, on the relationship between the national government and the States, or on the distribution of power and responsibilities among the various levels of government.'' Under Executive Order 13132, the agency may not issue a regulation with Federalism implications, that imposes substantial direct compliance costs, and that is not required by statute, unless the Federal government provides the funds necessary to pay the direct compliance costs incurred by State and local governments, the agency consults with State and local governments, or the agency consults with State and local officials early in the process of developing the proposed regulation. NHTSA also may not issue a regulation with Federalism implications and that preempts State law unless the agency consults with State and local officials early in the process of developing the proposed regulation.

We have analyzed this rule in accordance with the principles and criteria set forth in Executive Order 13132 and have determined that this rule does not have sufficient Federal implications to warrant consultation with State and local officials or the preparation of a Federalism summary impact statement. The rule will not have any substantial impact on the States, or on the current Federal-State relationship, or on the current distribution of power and responsibilities among the various local officials.

d. Executive Order 13045

Executive Order 13045 (62 FR 19885, April 23, 1997) applies to any rule that: (1) Is determined to be ''economically significant'' as defined under EO 12866, and (2) concerns an environmental, health or safety risk that NHTSA has reason to believe may have a disproportionate effect on children. If the regulatory action meets both criteria, we must evaluate the environmental health or safety effects of the planned rule on children, and explain why the planned regulation is preferable to other potentially effective and reasonably feasible alternatives considered by us.

This rule is not subject to the Executive Order because it is not economically significant as defined in E.O. 12866. As noted above, the impacts of this rule are minimal. It also does not involve decisions based on health risks that disproportionately affect children. This rule only clarifies or corrects specifications for the H–III3C dummy.

e. Executive Order 12778

Pursuant to Executive Order 12778, ''Civil Justice Reform,'' we have considered whether this rule will have any retroactive effect. This rule does not have any retroactive effect. A petition for reconsideration or other administrative proceeding will not be a prerequisite to an action seeking judicial review of this rule. This rule does not preempt the states from adopting laws or regulations on the same subject, except that it does preempt a state regulation that is in actual conflict with the federal regulation or makes compliance with the Federal regulation impossible or interferes with the implementation of the Federal statute.

f. National Environmental Policy Act

We have analyzed this amendment for the purposes of the National Environmental Policy Act and determined that it will not have any significant impact on the quality of the human environment.

g. Paperwork Reduction Act

Under the Paperwork Reduction Act of 1995, a person is not required to respond to a collection of information by a Federal agency unless the collection displays a valid OMB control number. This rule does not have any new information collection requirements.

h. National Technology Transfer and Advancement Act

Section 12(d) of the National Technology Transfer and Advancement Act of 1995 (NTTAA), Public Law 104–113, section 12(d) (15 U.S.C. 272) directs us to use voluntary consensus standards in regulatory activities unless doing so would be inconsistent with applicable law or otherwise impractical. Voluntary consensus standards are technical standards (*e.g.*, materials specifications, test methods, sampling procedures, and business practices) that are developed or adopted by voluntary consensus standards bodies, such as the Society of Automotive Engineers (SAE). The NTTAA directs us to provide Congress, through OMB, explanations when we decide not to use available and applicable voluntary consensus standards.

The H–III3C dummy was developed under the auspices of the SAE. (All relevant SAE standards were reviewed as part of the development process: SAE Recommended Practice J211, Rev. Mar95 ''Instrumentation for Impact Tests''; and SAE J1733 of 1994–12 ''Sign Convention for Vehicle Crash Testing.'') In responding to the petitions for reconsideration, NHTSA made some of its decisions based on test data developed by the SAE Dummy Test Equipment Sub-Committee (DTES). In so doing, the agency complied with the NTTAA to the fullest extent possible.

i. Unfunded Mandates Reform Act

Section 202 of the Unfunded Mandates Reform Act of 1995 (UMRA) requires Federal agencies to prepare a written assessment of the costs, benefits and other effects of proposed or final rules that include a Federal mandate likely to result in the expenditure by State, local or tribal governments, in the aggregate, or by the private sector, of more than $100 million in any one year (adjusted for inflation with base year of 1995). Before promulgating a NHTSA rule for which a written statement is needed, section 205 of the UMRA generally requires us to identify and consider a reasonable number of regulatory alternatives and adopt the least costly, most cost-effective or least burdensome alternative that achieves the objectives of the rule.

This rule does not impose any unfunded mandates under the Unfunded Mandates Reform Act of 1995. This rule does not meet the definition of a Federal mandate because it does not impose requirements on anyone. Further, it will not result in costs of $100 million or more to either State, local, or tribal governments, in the aggregate, or to the private sector. Thus, this rule is not subject to the requirements of sections 202 and 205 of the UMRA.

Regulation Identifier Number (RIN)

The Department of Transportation assigns a regulation identifier number (RIN) to each regulatory action listed in the Unified Agenda of Federal Regulations. The Regulatory Information Service Center publishes the Unified Agenda in April and October of each year. You may use the RIN contained in the heading at the beginning of this document to find this action in the Unified Agenda.

List of Subjects in 49 CFR Part 572

Motor vehicle safety, Incorporation by reference.

In consideration of the foregoing, NHTSA amends 49 CFR Part 572 as follows:

PART 572—ANTHROPOMORPHIC TEST DUMMIES

1. The authority citation for Part 572 continues to read as follows:

Authority: 49 U.S.C. 322, 30111, 30115, 30117 and 30166; delegation of authority at 49 CFR 1.50.

2. Revise § 572.140(a)(1) introductory text, (a)(2), and (b)(1) to read as follows:

§ 572.140 Incorporation by reference.

(a) * * *

(1) A drawings and specifications package entitled, ''Parts List and Drawings, Subpart P Hybrid III 3-year-old child crash test dummy, (H–III3C, Alpha version) September 2001,'' incorporated by reference in § 572.141 and consisting of:

* * * * *

(2) A procedures manual entitled ''Procedures for Assembly, Disassembly and Inspection (PADI), Subpart P, Hybird III 3-year-old Child Crash Test Dummy, (H–III3C, Alpha Version) September 2001,'' incorporated by reference in § 572.141;

* * * * *

(b) * * *

(1) The drawings and specifications package referred to in paragraph (a)(1) of this section and the PADI document referred to in paragraph (a)(2) of this section are accessible for viewing and copying at the Department of Transportation's Docket public area, Plaza 401, 400 Seventh St., SW., Washington, DC 20590, and downloadable at *dms.dot.gov*. They are also available from Reprographic Technologies, 9107 Gaither Rd., Gaithersburg, MD 20877, (301) 419–5070.

* * * * *

3. In § 572.144, revise paragraph (b)(1) and add paragraph (c)(7) to read as follows:

§ 572.144 Thorax assembly and test procedure.

* * * * *

(b) * * *

(1) Maximum sternum displacement (compression) relative to the spine, measured with the chest deflection transducer (SA–572–S50), must not be less than 32mm (1.3 in) and not more than 38mm (1.5 in). Within this specified compression corridor, the peak force, measured by the probe-mounted accelerometer as defined in § 572.146(a) and calculated in accordance with paragraph (b)(3) of this section, shall be not less than 680 N and not more than 810 N. The peak force after 12.5 mm of sternum compression but before reaching the minimum required 32.0 mm sternum compression shall not exceed 910 N.

* * * * *

(c) * * *

(7) No suspension hardware, suspension cables, or any other attachments to the probe, including the velocity vane, shall make contact with the dummy during the test.

4. In § 572.146, revise paragraph (a), add paragraph (l)(2)(iv), and revise Figure P4 to read as follows:

§ 572.146 Test conditions and instrumentation.

(a) The test probe for thoracic impacts, except for attachments, shall be of rigid metallic construction and concentric about its longitudinal axis. Any attachments to the impactor such as suspension hardware, and impact vanes, must meet the requirements of § 572.144(c)(7) of this part. The impactor shall have a mass of 1.70 ± 0.02 kg (3.75 ± 0.05 lb) and a minimum mass moment of inertia 164 kg-cm^2 (0.145 lb-in-sec^2) in yaw and pitch about the CG of the probe. One-third (⅓) of the weight of suspension cables and any attachments to the impact probe must be included in the calculation of mass, and such components may not exceed five percent of the total weight of the test probe. The impacting end of the probe, perpendicular to and concentric with the longitudinal axis of the probe, has a flat, continuous, and non-deformable 50.8 ± 0.25 mm (2.00 ± 0.01 inch) diameter face with an edge radius of 7.6/12.7 mm (0.3/0.5 in). The impactor shall have a 53.3 mm (2.1 in) dia. cylindrical surface extending for a minimum of 25.4 mm (1.0 in) to the rear from the impact face. The probe's end opposite to the impact face has provisions for mounting an accelerometer with its sensitive axis collinear with the longitudinal axis of the probe. The impact probe has a free air resonant frequency not less than 1000 Hz limited to the direction of the longitudinal axis of the impactor.

* * * * *

(1) * * *

(2) * * *

(iv) Rotation potentiometer response (if used)—CFC 60.

* * * * *

BILLING CODE 4910–59–P

Figure P4

THORAX IMPACT TEST SET-UP SPECIFICATIONS

NOTES:
1) MIDDLE RIB LEVEL ± 1°
2) MIDSAGITTAL PLANE VERTICAL WITHIN ±1°
3) IMPACT POINT OF LONGITUDINAL CENTERLINE OF PROBE COINCIDES WITH MIDSAGITTAL PLANE OF DUMMY.
4) ALIGN PROBE TO CENTER OF MIDDLE RIB ±2.5mm (0.1in) WITHIN 0.5° OF HORIZONTAL PLANE.
5) UPPER BACK PLATE OF SPINE BOX AT 90° ±1° FROM HORIZONTAL

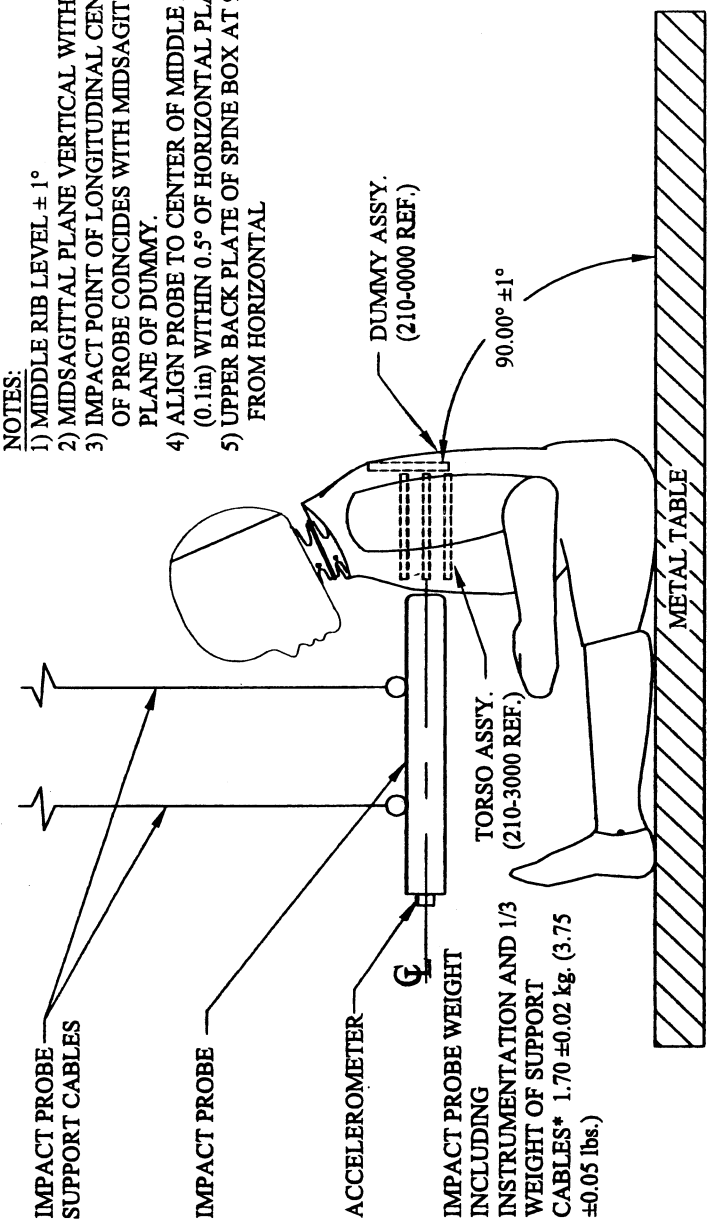

* 1/3 WEIGHT OF PROBE SUPPORT CABLES AND THEIR ATTACHMENTS TO THE IMPACT PROBE NOT TO EXCEED 5% OF THE TOTAL IMPACT PROBE WEIGHT.

Issued: December 5, 2001.

Jeffrey W. Runge,

Administrator.

[FR Doc. 01–30637 Filed 12–12–01; 8:45 am]

BILLING CODE 4910–59–C

DEPARTMENT OF COMMERCE

National Oceanic and Atmospheric Administration

50 CFR Part 230

[Docket No. 001120325–1290–03, I.D. 111901B]

Whaling Provisions: Aboriginal Subsistence Whaling Quotas

AGENCY: National Marine Fisheries Service (NMFS), National Oceanic and Atmospheric Administration (NOAA), Commerce.

ACTION: Aboriginal subsistence whaling quota.

SUMMARY: NMFS announces a 2001–2002 aboriginal subsistence whaling quota for gray whales of five gray whales landed. This quota and other management provisions govern the harvest of gray whales by members of the Makah Indian Tribe (Tribe).

DATES: Effective for 1 year beginning December 12, 2001.

ADDRESSES: Office of Protected Resources, National Marine Fisheries Service, 1315 East West Highway, Silver Spring, MD 20910.

FOR FURTHER INFORMATION CONTACT: Chris Yates, (301) 713–2322.

SUPPLEMENTARY INFORMATION: Aboriginal subsistence whaling in the United States is governed by the Whaling Convention Act (16 U.S.C. 916 *et seq.*) and by regulations at 50 CFR part 230. The rules require the Secretary of Commerce to publish, at least annually, aboriginal subsistence whaling quotas and any other limitations on aboriginal subsistence whaling deriving from regulations of the International Whaling Commission (IWC).

At the 1997 Annual Meeting of the IWC, the Commission set quotas for aboriginal subsistence use of gray whales from the Eastern stock in the North Pacific. This action by the IWC, thus, authorized aboriginal subsistence whaling by the Tribe for gray whales and is discussed in greater detail in the **Federal Register** notification of aboriginal subsistence whaling quotas for 1999 (64 FR 28413, May 26, 1999).

On June 9, 2000, the United States Court of Appeals for the Ninth Circuit ruled that the Department of Commerce's environmental assessment (EA) under the National Environmental Policy Act (NEPA) should have been completed before entering into a cooperative agreement with the Makah Tribe. The Court ordered the agency to prepare a new NEPA document under circumstances that would ensure an objective evaluation of the environmental consequences of the gray whale harvest.

NOAA set the 2000 quota at zero (65 FR 75186, December 1, 2000) and set the 2001 quota at zero (66 FR 14862, March 14, 2001) pending completion of the NEPA analysis.

NOAA completed a draft EA on January 12, 2001, and solicited public comments. A final EA was issued on July 12, 2001, and selected a preferred alternative allowing the take of up to five whales per year for the years 2001 and 2002. Following the completion of this EA, NOAA and the Tribe entered into a cooperative agreement governing the conduct of the hunt.

The agreement provides that the Makah Tribal Council, in cooperation with NOAA, will manage the gray whale hunts under the 1997 IWC quota and the aboriginal subsistence whaling regulations set forth at 50 CFR Part 230, and details inspection and reporting requirements and enforcement procedures. In addition, the Council will license and regulate Tribal whalers, according to the Management Plan for Makah Treaty Gray Whale Hunting for the Years 1998–2002, as amended by Council Resolution No. 57–01 on May 30, 2001.

Dated: December 7, 2001.

William T. Hogarth,

Assistant Administrator for Fisheries, National Marine Fisheries Service.

[FR Doc. 01–30827 Filed 12–12–01; 8:45 am]

BILLING CODE 3510–22–S

DEPARTMENT OF COMMERCE

National Oceanic and Atmospheric Administration

50 CFR Part 635

[Docket No. 010710169–1169–01; I.D. 060401B]

RIN 0648–AP31

Atlantic Highly Migratory Species; Pelagic Longline Fishery; Sea Turtle Protection Measures

AGENCY: National Marine Fisheries Service (NMFS), National Oceanic and Atmospheric Administration (NOAA), Commerce.

ACTION: Emergency rule; extension of expiration date; request for comments.

SUMMARY: NMFS extends the expiration date of the emergency rule that closed the Northeast Distant Statistical Reporting (NED) Area to pelagic longline fishing, required modifications in deploying pelagic longline fishing gear, and required sea turtle handling and release guidelines for bottom and pelagic longline fisheries to be posted in the wheelhouse. This extension is necessary to maintain the reduction in bycatch and bycatch mortality of loggerhead and leatherback sea turtles in the Atlantic bottom and pelagic longline fisheries as required by the June 14, 2001, Biological Opinion (BiOp).

DATES: The expiration date of the emergency rule published July 13, 2001 (66 FR 36711), is extended to July 8, 2002. Comments must be received no later than 5 p.m. on February 11, 2002.

ADDRESSES: Written comments on this action must be mailed to Christopher Rogers, Chief, NMFS Highly Migratory Species Management Division, 1315 East-West Highway, Silver Spring, MD 20910; or faxed to 301–713–1917. Comments will not be accepted if submitted via email or the Internet. Copies of the environmental assessment and regulatory impact review prepared for the July 13, 2001, emergency rule may be obtained from Tyson Kade at the same address.

FOR FURTHER INFORMATION CONTACT: Tyson Kade or Karyl Brewster-Geisz at 301–713–2347.

SUPPLEMENTARY INFORMATION: The Atlantic swordfish and tuna fisheries are managed under the authority of the Magnuson-Stevens Fishery Conservation and Management Act (Magnuson-Stevens Act) and the Atlantic Tunas Convention Act. Atlantic sharks are managed under the authority of the Magnuson-Stevens Act. The Fishery Management Plan for Atlantic Tunas, Swordfish, and Sharks (HMS FMP) is implemented by regulations at 50 CFR part 635.

Pelagic Longline Fishery

Pelagic longline gear is a type of commercial fishing gear used by U.S. fishermen in the Atlantic Ocean to target highly migratory species (HMS). The gear consists of a mainline, often many miles long, suspended in the water column by floats and from which baited hooks are attached on leaders (gangions). Though not completely selective, longline gear can be modified (e.g., gear configuration, hook depth, timing of sets) to target yellowfin tuna, bigeye tuna, sharks, or swordfish.

Data collected through observer and vessel logbook programs indicate that pelagic longline fishing for Atlantic swordfish and tunas often results in the catch of non-target finfish species, including sharks, bluefin tuna, billfish, undersized swordfish, and of protected species, including threatened and

endangered sea turtles. The bycatch of protected species (sea turtles or marine mammals) may significantly impair the recovery of these species. Consistent with national standard 9 of the Magnuson-Stevens Act, NMFS has implemented measures to reduce bycatch and bycatch mortality to the extent practicable in the Atlantic bottom and pelagic longline fisheries.

Area Closure and Gear Modifications

The intent of extending this emergency rule is to maintain the reduction in the incidental take and mortality of sea turtles captured by pelagic longlines. The first measure continues the closure of the NED area, which became effective July 15, 2001. The NED area has the highest incidental take rate of sea turtles by the U.S. pelagic longline fleet. This regulatory extension will close the NED area to vessels that have been issued, or are required to have, Federal HMS limited access permits and/or use pelagic longline gear. The closed area is bounded by the following coordinates: 35°00′ N. lat., 60°00′ W. long.; 55°00′ N. lat., 60°00′ W. long.; 55°00′ N. lat., 20°00′ W. long.; 35°00′ N. lat., 20°00′ W. long. This closure comprises an area of approximately 2,631,000 square nautical miles (nm^2), including the Grand Banks and other fishing locations. Only larger vessels, primarily fishing out of ports in the northeast, travel to this area on a seasonal basis, from June through October. Although the NED area is large, vessels fishing in that area primarily utilize less than 10 percent of the total area subject to the closure.

The second measure, which became effective August 1, 2001, is designed to reduce the mortality rate of captured sea turtles year-round and in all fishing areas. All Atlantic vessels that use pelagic longline gear and have been issued, or are required to have, Federal HMS limited access permits are prohibited from setting gangions within two gangion lengths of the floatline. Specifically, while the gear is deployed, gangions may not be attached to floatlines, nor to the mainline except at a distance from the attachment point of the floatline to the mainline of at least twice the length of the average gangion length in the set. Based on information from the Hawaii longline fleet, hooks that are beneath or adjacent to floatlines have a much higher incidental take of sea turtles than hooks one or more positions away from the floatline. NMFS projects that this measure will result in reductions of 22 percent for loggerhead interactions and 24 percent for leatherback interactions.

In addition to restricting the gangion placement relative to the floatline, all Atlantic vessels that use pelagic longline gear and have been issued, or are required to have, Federal HMS limited access permits must continue to deploy the gear during shallow sets so that the length of the gangion is greater than the length of the floatline. The intent of this requirement is to ensure that hooked or entangled turtles have sufficient slack line to be able to reach the surface and avoid drowning. For longline sets in which the combined depth of the floatline plus the gangion is 100 meters or less, the length of the gangion must be at least 10 percent longer than th e length of the floatline. For sets over 100 meters, the requirement does not apply.

Finally, all Atlantic bottom and pelagic longline vessels that have been issued, or are required to have, Federal HMS permits are required to post inside the wheelhouse the guidelines for the safe handling of sea turtles captured in a pelagic longline interaction. This measure allows vessel captains to refer to the appropriate handling and release guidelines in the event a sea turtle is accidentally hooked or entangled. The requirement to post sea turtle handling instructions became effective September 15, 2001. NMFS distributed the guidelines via mail to all HMS bottom and pelagic longline permit holders and announced this requirement and the availability of the guidelines via the fax network. If a vessel owner did not receive the document, it is available for downloading from the Internet at: http://www.nmfs.noaa.gov/sfa/hmspg.html, or NMFS can be contacted to request a copy (see **ADDRESSES**).

Classification

This emergency rule extension is issued under the authority of the Magnuson-Stevens Act and the Atlantic Tunas Convention Act. The Assistant Administrator for Fisheries, NOAA (AA) has determined that these regulations are necessary to comply with the requirements of the June 14, 2001, BiOp.

NMFS prepared an Environment Assessment for this emergency rule that describes the impact on the human environment and found that no significant impact would result. This emergency rule extension is of limited duration. NMFS is in the process of developing a rule, including an environmental impact statement, that will propose measures necessary to meet the requirements of the June 14, 2001, BiOp.

To comply with Executive Order 12866, NMFS also prepared a Regulatory Impact Review for this action which assesses the net economic costs and benefits of this action. Additional details concerning the basis for this action are contained in the initial emergency rule and are not repeated here.

The AA finds that there is good cause to waive the requirement to provide prior notice and an opportunity for public comment pursuant to authority set forth at 5 U.S.C. 553 (b)(B), as providing prior notice and an opportunity for public comment would be contrary to the public interest. Public comments were received regarding the April 11, 2001, draft BiOp which indicated the measures to be implemented by this emergency rule. These comments were addressed, as appropriate, by the final draft of the BiOp, issued June 14, 2001.

NMFS received two comments on the initial emergency rule. The first comment expressed concern over the effectiveness of making the gangions 110 percent of the floatline length. NMFS expects this issue to be addressed and assessed during the ongoing experimental fishery. The second comment expressed support for the measures implemented in the emergency rule as a means of reducing bycatch in the pelagic longline fishery. Comments received on this emergency rule extension will be responded to in the course of the upcoming proposed and final regulations.

The AA has determined that this emergency rule is consistent to the maximum extent practicable with the coastal zone management programs of those Atlantic, Gulf of Mexico, and Carribean coastal states that have approved coastal zone management programs. NMFS notified the states concerning the July 13, 2001, emergency rule and requested that they notify the agency with respect to concurrence with the consistency determination. All states that have replied agreed with this determination.

Dated: December 5, 2001.

William T. Hogarth,

Assistant Administrator for Fisheries, National Marine Fisheries Service.

[FR Doc. 01–30829 Filed 12–12–01; 8:45 am]

BILLING CODE 3510–22–S

DEPARTMENT OF COMMERCE

National Oceanic and Atmospheric Administration

50 CFR Part 679

[Docket No. 010112013–1013–01; I.D. 112301F]

Fisheries of the Exclusive Economic Zone Off Alaska; Pacific Cod by Vessels Using Hook-and-Line Gear in the Bering Sea and Aleutian Islands Management Area

AGENCY: National Marine Fisheries Service (NMFS), National Oceanic and Atmospheric Administration (NOAA), Commerce.

ACTION: Closure.

SUMMARY: NMFS is closing directed fishing for Pacific cod by vessels using hook-and-line gear in the Bering Sea and Aleutian Islands management area (BSAI). This action is necessary to prevent exceeding the 2001 bycatch allowance of halibut specified for the Pacific cod hook-and-line gear fishery category in the BSAI.

DATES: Effective 1200 hrs, Alaska local time (A.l.t.), December 10, 2001, until 2400 hrs, A.l.t., December 31, 2001.

FOR FURTHER INFORMATION CONTACT: Mary Furuness, 907–586–7228.

SUPPLEMENTARY INFORMATION: NMFS manages the groundfish fishery in the BSAI exclusive economic zone according to the Fishery Management Plan for the Groundfish Fishery of the Bering Sea and Aleutian Islands Area (FMP) prepared by the North Pacific Fishery Management Council under authority of the Magnuson-Stevens Fishery Conservation and Management Act. Regulations governing fishing by U.S. vessels in accordance with the FMP appear at subpart H of 50 CFR part 600 and 50 CFR part 679.

The 2001 halibut bycatch allowance specified for the Pacific cod hook-and-line gear fishery category, which is defined at § 679.21 (e)(4)(ii)(A), is 755 metric tons (66 FR 7276, January 22, 2001, and 66 FR 37167, July 17, 2001).

In accordance with § 679.21 (e)(8), the Administrator, Alaska Region, NMFS (Regional Administrator), has determined that the 2001 bycatch allowance of halibut specified for the Pacific cod hook-and-line gear fishery category in the BSAI has been caught. Consequently, the Regional Administrator is closing directed fishing for Pacific cod by vessels using hook-and-line gear in the BSAI.

Maximum retainable bycatch amounts may be found in the regulations at §§ 679.20 (e) and (f).

Classification

This action responds to the best available information recently obtained from the fishery. The Assistant Administrator for Fisheries, NOAA, finds that the need to immediately implement this action to avoid exceeding the halibut bycatch allowance for the Pacific cod hook-and-line gear fishery category constitutes good cause to waive the requirement to provide prior notice and opportunity for public comment pursuant to the authority set forth at 5 U.S.C. 553 (b)(3)(B) and 50 CFR 679.20 (b)(3)(iii)(A), as such procedures would be unnecessary and contrary to the public interest. Similarly, the need to implement these measures in a timely fashion to avoid exceeding the halibut bycatch allowance for the Pacific cod hook-and-line gear fishery category constitutes good cause to find that the effective date of this action cannot be delayed for 30 days. Accordingly, under 5 U.S.C. 553 (d), a delay in the effective date is hereby waived.

This action is required by 50 CFR 679.21 and is exempt from review under Executive Order 12866.

Authority: 16 U.S.C. 1801 *et seq.*

Dated: December 7, 2001.

Jonathan M. Kurland,

Acting Director, Office of Sustainable Fisheries, National Marine Fisheries Service.

[FR Doc. 01–30818 Filed 12–10–01; 2:34 pm]

BILLING CODE 3510–22–S

Proposed Rules

Federal Register
Vol. 66, No. 240
Thursday, December 13, 2001

This section of the FEDERAL REGISTER contains notices to the public of the proposed issuance of rules and regulations. The purpose of these notices is to give interested persons an opportunity to participate in the rule making prior to the adoption of the final rules.

FEDERAL RESERVE SYSTEM

12 CFR Part 226

[Regulation Z; Docket No. R–1118]

Truth in Lending

AGENCY: Board of Governors of the Federal Reserve System.

ACTION: Proposed rule; official staff commentary.

SUMMARY: The Board is publishing for comment proposed revisions to the official staff commentary to Regulation Z, which implements the Truth in Lending Act. The commentary applies and interprets the requirements of Regulation Z. The proposed update would clarify how creditors that place Truth in Lending Act disclosures on the same document with the credit contract may satisfy the requirement for providing the disclosures in a form the consumer may keep before consummation. In addition, the proposed revisions provide guidance on disclosing costs for certain credit insurance policies and on the definition of ''business day'' for purposes of the right to rescind certain home-secured loans.

DATES: Comments must be received on or before February 1, 2002.

ADDRESSES: Comments should refer to Docket No. R–1118 and should be mailed to Ms. Jennifer J. Johnson, Secretary, Board of Governors of the Federal Reserve System, 20th Street and Constitution Avenue, NW., Washington, DC 20551, or mailed electronically to *regs.comments@federalreserve.gov.* Comments addressed to Ms. Johnson may also be delivered, between 8:45 a.m. and 5:15 p.m., to the Board's mail facility in the West Courtyard, located on 21st Street between Constitution Avenue and C Street, NW. Members of the public may inspect comments in Room MP–500 of the Martin Building between 9 a.m. and 5 p.m. on weekdays pursuant to § 261.12, except as provided in § 261.14, of the Board's Rules Regarding Availability of Information, 12 CFR 261.12 and 261.14.

FOR FURTHER INFORMATION CONTACT: David A. Stein, Senior Attorney, or Dan S. Sokolov, Attorney; Division of Consumer and Community Affairs, Board of Governors of the Federal Reserve System, at (202) 452–3667 or 452–2412; for users of Telecommunications Device for the Deaf (''TDD'') only, contact (202) 263–4869.

SUPPLEMENTARY INFORMATION:

I. Background

The purpose of the Truth in Lending Act (TILA; 15 U.S.C. 1601 *et seq.*) is to promote the informed use of consumer credit by providing for disclosures about its terms and cost. The act requires creditors to disclose the cost of credit as a dollar amount (the finance charge) and as an annual percentage rate. Uniformity in creditors' disclosures is intended to assist consumers in comparison shopping for credit. TILA requires additional disclosures for loans secured by consumers' homes and permits consumers to rescind certain transactions that involve their principal dwelling. In addition, the act regulates certain practices of creditors.

TILA is implemented by the Board's Regulation Z (12 CFR part 226). The Board's official staff commentary (12 CFR part 226 (Supp. I)) interprets the regulation, and provides guidance to creditors in applying the regulation to specific transactions. Good faith compliance with the commentary affords protection from liability under section 130(f) of TILA. The commentary is a substitute for individual staff interpretations; it is updated periodically to address significant questions that arise. The Board expects to adopt final revisions to the commentary in March 2002; to the extent the revisions impose new requirements on creditors, compliance would be optional until October 1, 2002, the effective date for mandatory compliance.

II. Proposed Revisions

Subpart A—General

Section 226.2—Definitions and Rules of Construction

2(a) Definitions

2(a)(6) Business Day

Generally, when consumers have a right to rescind a home-secured loan, they may exercise the right until midnight of the third business day following consummation or the delivery of certain disclosures, whichever occurs last. Comment 2(a)(6)–2 provides that for purposes of rescission, ''business day'' means all calendar days except Sundays and the federal legal holidays listed in 5 U.S.C. 6103(a). Four legal holidays are identified in that statute by a specific date. Independence Day, July 4, is one example. The comment would be revised to clarify that only the date specified in the statute is considered a legal holiday for purposes of rescission. The proposed comment identifies the four legal holidays in 5 U.S.C. 6103(a) that are defined by a specific date, and provides an example to aid in compliance. The comment also would be amended to include a cross-reference to comment 31(c)(1)–1, which states that creditors may rely on the definition of ''business day'' used for the rescission rule for purposes of complying with the timing requirements in furnishing disclosures for high-cost loans covered by § 226.32.

Section 226.4—Finance Charge

4(d) Insurance and Debt Cancellation Coverage

Under § 226.4(d), amounts paid for credit insurance or debt cancellation coverage may be excluded from the finance charge if the creditor discloses the fee or premium for the initial term of coverage, among other conditions. Comment 4(d)–11 provides that the initial term is based on the period for which the insurer or creditor is initially obligated to provide coverage. Comment 4(d)–12 provides that creditors have the option of providing disclosures on the basis of one year of coverage, where the fee or premium for the coverage is assessed periodically and the consumer is under no obligation to continue the coverage after making the initial payment. Comment 4(d)–12 would be revised to clarify that this option applies even if the consumer can cancel the

coverage prior to making the initial payment.

Subpart C—Closed-End Credit

Section 226.17—General Disclosure Requirements

17(b) Time of Disclosures

Creditors must give the required disclosures to the consumer in writing, in a form that the consumer may keep, before consummation of the transaction. See § 226.17(a)(1) and (b). Comment 17(b)–3 would be added to clarify how creditors satisfy this timing requirement when TILA disclosures are placed on the same document with the credit contract, as permitted under comment 17(a)(1)–3.

Questions have been raised about whether creditors must provide consumers with a separate copy of the document to keep before providing a second copy that the consumer may execute to become obligated on the credit contract. The proposed comment would clarify that creditors are not required to provide two separate copies to the consumer. A creditor satisfies the timing requirements by giving the consumer one copy of the unexecuted credit contract containing the disclosures to read and sign. The proposed comment would also clarify that it is not sufficient, however, if the document containing the TILA disclosures is merely shown to the consumer (and not given to the consumer) before the consumer signs and becomes obligated.

III. Form of Comment Letters

Comment letters should refer to Docket No. R–1118, and, when possible, should use a standard typeface with a font size of 10 or 12. This will enable the Board to convert text submitted in paper form to machine-readable form through electronic scanning, and will facilitate automated retrieval of comments for review. Also, if accompanied by an original document in paper form, comments may be submitted on 3½ inch computer diskettes in any IBM-compatible DOS-or Windows-based format. Comments may also be mailed electronically to *regs.comments@federalreserve.gov.*

IV. Solicitation of Comments Regarding the Use of ''Plain Language''

Section 722 of the Gramm-Leach-Bliley Act of 1999 requires the Board to use ''plain language'' in all proposed and final rules published after January 1, 2000. The Board invites comments on whether the proposed commentary is clearly stated and effectively organized, and how the Board might make the commentary easier to understand.

List of Subjects in 12 CFR Part 226

Consumer protection, Disclosures, Federal Reserve System, Truth in lending.

Text of Proposed Revisions

Certain conventions have been used to highlight the proposed revisions to the text of the staff commentary. New language is shown inside bold-faced arrows while language that would be deleted is set off with bold-faced brackets. Comments are numbered to comply with **Federal Register** publication rules.

For the reasons set forth in the preamble, the Board proposes to amend 12 CFR part 226 as follows:

PART 226—TRUTH IN LENDING (REGULATION Z)

1. The authority citation for part 226 continues to read as follows:

Authority: 12 U.S.C. 3806; 15 U.S.C. 1604 and 1637(c)(5).

2. In Supplement I to Part 226:

a. Under *Section 226.2—Definitions and Rules of Construction,* under *2(a)(6) Business Day,* paragraph 2. is revised.

b. Under *Section 226.4—Finance Charge,* under *4(d) Insurance and Debt Cancellation Coverage,* paragraph 12. is revised.

c. Under *Section 226.17—General Disclosure Requirements,* under *17(b) Time of Disclosures,* a new paragraph 3. is added.

Supplement I to Part 226—Official Staff Interpretations

* * * * *

Subpart A—General

* * * * *

§ 226.2—Definition and Rules of Construction

* * * * *

2(a)(6) Business day.

* * * * *

2. *Rescission rule.* A more precise rule for what is a business day (all calendar days except Sundays and the federal legal holidays listed in 5 U.S.C. 6103(a)) applies when the right of rescission ►or mortgages subject to § 226.32 are involved. See also comment 31(c)(1)–1. Four federal legal holidays are identified in 5 U.S.C. 6103(a) by a specific date: New Year's Day, January 1; Independence Day, July 4; Veteran's Day, November 11; and Christmas Day, December 25. When one of these holidays falls on a Saturday, July 4 for example, federal offices and other entities may observe the holiday on the preceding Friday, July 3. The observed holiday, July 3, is a business day for purposes of rescission or the delivery of disclosures for certain high-cost mortgages covered by § 226.32◄ **[**is involved**]**.

* * * * *

§ 226.4—Finance Charge

* * * * *

4(d) Insurance and debt cancellation coverage.

* * * * *

12. *Initial term; alternative.* i. *General.* A creditor has the option of providing cost disclosures on the basis of ►an assumed initial term of◄ one year of insurance or debt-cancellation coverage instead of a longer initial term (provided the premium or fee is clearly labeled as being for one year) if:

A. The initial term is indefinite or not clear, or

B. The consumer has agreed to pay a premium or fee that is assessed periodically but the consumer is under no obligation to continue the coverage after ►consummation◄ **[**making the initial payment**]**.

ii. *Open-end plans.* For open-end plans, a creditor also has the option of providing unit-cost disclosure on the basis of a period that is less than one year if the consumer has agreed to pay a premium or fee that is assessed periodically, for example monthly, but the consumer is under no obligation to continue the coverage.

iii. *Examples.* To illustrate:

A. A credit life insurance policy providing coverage for a 30-year mortgage loan has an initial term of 30 years even though premiums are paid monthly and the consumer is not required to continue the coverage after ►consummation◄ **[**making the initial payment**]**. The creditor has the option of making disclosures on the basis of coverage for ►an assumed initial term of◄ one year.

* * * * *

Subpart C—Closed-End Credit

* * * * *

§ 226.17—General Disclosure Requirements

* * * * *

17(b) Time of disclosures.

* * * * *

►3. *Disclosures provided on credit contracts.* Creditors must give the required disclosures to the consumer in writing, in a form that the consumer may keep, before consummation of the transaction. See § 226.17(a)(1) and (b).

Sometimes the disclosures are placed on the same document with the credit contract, as permitted under comment 17(a)(1)–3. In such cases, the timing requirement is satisfied if the creditor gives a copy of the document containing the unexecuted credit contract and the disclosures to the consumer to read and sign, and the consumer is free to take possession of and review the document in its entirety before signing. It is not sufficient, however, if the document containing the disclosures is merely shown to the consumer before the consumer signs and becomes obligated; the creditor must give the document to the consumer. If after receiving the document, the consumer signs it and becomes obligated, the consumer may return it to the creditor to execute or process, provided the consumer is also given a copy at that time to keep.◀

* * * * *

By order of the Board of Governors of the Federal Reserve System, acting through the Director of the Division of Consumer and Community Affairs under delegated authority, December 7, 2001.

Jennifer J. Johnson,

Secretary of the Board.

[FR Doc. 01–30781 Filed 12–12–01; 8:45 am]

BILLING CODE 6210–01–P

COMMODITY FUTURES TRADING COMMISSION

17 CFR Part 15

RIN 3038–AB88

Reporting Levels for Large Trader Reports; Security Futures Products

AGENCY: Commodity Futures Trading Commission.

ACTION: Proposed rules.

SUMMARY: The Commodity Futures Trading Commission (Commission or CFTC) is proposing to amend part 15 of its rules, 17 CFR part 15, to establish reporting levels for security futures products (SFPs) traded on designated contract markets and notice-designated contract markets. The reporting levels being proposed are 1000 contracts for an SFP involving an individual security and 200 contracts for an SFP involving a narrow-based index of equity securities.

DATES: Comments must be received by January 14, 2002.

ADDRESSES: Comments should be sent to the Commodity Futures Trading Commission, Three Lafayette Centre, 1155 21st Street, NW., Washington, DC 20581, attention: Office of the Secretariat. Comments may be sent by facsimile transmission to (202) 418–5521 or, by e-mail to *secretary@cftc.gov*. Reference should be made to ''Reporting Levels for Security Futures Products.''

FOR FURTHER INFORMATION CONTACT: Gary J. Martinaitis, Deputy Associate Director, Market Surveillance Section, or Nancy E. Yanofsky, Assistant Chief Counsel, Division of Economic Analysis, Commodity Futures Trading Commission, Three Lafayette Centre, 1155 21st Street, NW., Washington, DC 20581. Telephone: (202) 418–5260. E-mail: *GMartinaitis@cftc.gov* or *NYanofsky@cftc.gov.*

SUPPLEMENTARY INFORMATION: On December 21, 2000, the President signed into law the Commodity Futures Modernization Act of 2000 (CFMA), Pub. L. No. 106–554, which extensively revises the Commodity Exchange Act (Act). Among other things, the CFMA removed the restriction in the Act on the trading of futures contracts on individual equity securities and narrow-based indices of equity securities.[1] Under the revised law, these products are now referred to as ''security futures products'' (SFPs)[2] and may be traded on designated contract markets, notice-designated contract markets and registered derivatives transaction execution facilities.

SFPs, like all other commodities traded on Commission-designated markets, will be subject to the Commission's large trader reporting rules. Those rules require futures commission merchants, clearing members and foreign brokers to report to the Commission position information of the largest futures and options traders and require the traders themselves to provide certain identifying information. Reporting levels are set for individual futures and option markets under the authority of sections 4i and 4c of the Act to ensure that the Commission receives adequate information to carry out its market surveillance programs. These market surveillance programs are designed to detect and to prevent market congestion and price manipulation and to enforce speculative position limits. They also provide information regarding the overall hedging and speculative use of, and foreign participation in, the futures markets and other matters of public interest. Generally, large trader reports are filed by the firm carrying the reportable trader's position.[3]

Based upon its experience in administering the large trader reporting system, the Commission is proposing to establish a reporting level of 1000 contracts for SFPs involving an individual security[4] and 200 contracts for SFPs involving a narrow-based index of securities.[5] The Commission intends to review these levels an appropriate amount of time after trading in SFPs commences to determine if it provides adequate coverage for effective market surveillance. At that time, the Commission will consider actual trading experience—including trading volume, open interest and the number and position sizes of individual traders—to determine whether the level is too high or too low for effective market surveillance.

The Commission notes that the proposed rules require the reporting of positions in SFPs on notice-designated contract markets. Notice-designated contract markets are entities that are otherwise regulated by the Securities and Exchange Commission (such as registered national securities exchanges and registered national securities associations) that apply for and, pursuant to a notice-filing procedure, become designated as contract markets by the Commission for the limited

[1] *See* section 251(a) of the CFMA. This trading previously had been prohibited by section 2(a)(1)(B)(v) of the Act.

[2] The term ''security futures product'' is defined in section 1a(32) of the Act to mean ''a security future or any put, call, straddle, option, or privilege on any security future.'' The term ''security future'' is defined in section 1a(31) of the Act; it generally means a contract of sale for future delivery of a single security or of a narrow-based security index, including any interest therein or based on the value thereof, except exempted securities (with the exclusion of municipal securities) and certain agreements, contracts, or transactions excluded from the Act. Because the CFMA provides that options on security futures cannot be traded until at least December 21, 2003, security futures are the only security futures product that may be available for trading during the next two years.

[3] Generally, parts 17 and 18 of the regulations, 17 CFR parts 17 and 18, require reports from firms and traders, respectively, when a trader holds a ''reportable position.'' A reportable position is any open contract position that at the close of the market on any business day equals or exceeds the quantity specified in Commission rule 15.03 in either: (1) Any one future of any commodity on any one contract market, excluding futures contracts against which notices of delivery have been stopped by a trader or issued by the clearing organization of a contract market; or (2) long or short put or call options that exercise into the same future of any commodity on any one contract market. 17 CFR 15.00 and part 150.

The firms which carry accounts for traders holding ''reportable positions'' are required to identify those accounts by filing a CFTC Form 102 and to report all reportable positions in the accounts to the Commission. The individual trader who holds or controls the reportable position, however, is required to report to the Commission only in response to a special call.

[4] Based on staff discussions with industry participants, the Commission understands that futures contracts on individual securities will specify 100 shares of the underlying security.

[5] This number corresponds to the current reporting level for security options.

purpose of trading SFPs.[6] The Act and the Commission's regulations exempt notice-designated contract markets from certain provisions of the Act and the Commission's regulations; these trading facilities, however, are subject to the Commission's large trader reporting system.[7] Thus, futures commission merchants (whether registered under a full or a notice filing-procedure under rule 3.10[8]), clearing members, foreign brokers and others who have reporting and other obligations under parts 15 through 21 of the Commission's rules will have concomitant obligations with respect to SFPs traded on notice-designated contract markets.

I. Cost Benefit Analysis

Section 15 of the Act, as amended by section 119 of the CFMA, requires the Commission to consider the costs and benefits of its action before issuing a new regulation under the Act. By its terms, section 15 does not require the Commission to quantify the costs and benefits of a new regulation or to determine whether the benefits of the proposed regulation outweigh its costs. Rather, section 15 simply requires the Commission to ''consider the costs and benefits'' of the subject rule.

Section 15(a) further specifies that the costs and benefits of the proposed rule shall be evaluated in light of five broad areas of market and public concern: (1) Protection of market participants and the public; (2) efficiency, competitiveness, and financial integrity of futures markets; (3) price discovery; (4) sound risk management practices; and (5) other public interest considerations. The Commission may, in its discretion, give greater weight to any one of the five enumerated areas of concern and may, in its discretion, determine that, notwithstanding its costs, a particular rule is necessary or appropriate to protect the public interest or to effectuate any of the provisions or to accomplish any of the purposes of the Act.

The proposed rule imposes limited costs in terms of reporting requirements, particularly since most entities that trade on U.S. futures markets already file larger trader reports with the Commission. Moreover, to reduce the cost of reporting, the Commission will periodically review the reporting level for SFPs, as it generally does for reporting levels for all commodities.[9] The Commission also notes that it will be collecting these reports for itself as well as sharing them with the Securities and Exchange Commission, thereby diminishing the potential for duplication of this reporting burden. The countervailing benefits of these costs are that the Commission will have the necessary information to perform its market surveillance function and thus carry out its mandate of assuring the continued existence of competitive and efficient markets, protecting their price discovery function and protecting market participants and the public interest therein.

After considering these factors, the Commission has determined to propose the revision to part 15 set forth below.

The Commission specifically invites public comment on its application of the criteria contained in the Act for consideration. Commenters are also invited to submit any quantifiable data that they may have concerning the costs and benefits of the proposed rules with their comment letters.

II. Related Matters

A. Regulatory Flexibility Act

The Regulatory Flexibility Act (RFA), 5 U.S.C. 601 *et seq.,* requires that federal agencies, in proposing rules, consider the impact of those rules on small entities. The Commission has previously determined that large traders and FCMs are not ''small entities'' for purposes of the RFA.[10] The proposed amendment to reporting requirements primarily impacts FCMs. Similarly, foreign brokers and foreign traders report only if carrying or holding reportable, *i.e.,* large positions. Therefore, the Acting Chairman, on behalf of the Commission, hereby certifies, pursuant to 5 U.S.C. 605(b), that the action taken herein will not have a significant economic impact on a substantial number of small entities. The Commission invites comments from any firm believing that these rules would have a significant economic impact on its operations.

B. Paperwork Reduction Act

The Paperwork Reduction Act of 1995 (44 U.S.C. 3507(d)) (PRA), which imposes certain requirements on federal agencies (including the Commission) in connection with their conducting or sponsoring any collection of information as defined by the PRA, does not apply to this rule. The Commission believes that the proposed rule amendment does not contain information requirements which require the approval of the Office of Management and Budget. The purpose of this rule is to establish a specific reporting level for security futures products.

List of Subjects in 17 CFR Part 15

Brokers, Reporting and recordkeeping requirements.

In consideration of the foregoing, and pursuant to the authority contained in the Act, and in particular sections 4g, 4i, 5, 5a and 8a of the Act, 7 U.S.C. 6g, 6i, 7, 7a and 12a, as amended, the Commission hereby proposes to amend Part 15 of Chapter I of Title 17 of the Code of Federal Regulations as follows:

PART 15—REPORTS—GENERAL PROVISIONS

1. The authority citation for part 15 is proposed to be revised to read as follows:

Authority: 7 U.S.C. 2, 5, 6a, 6c, 6f, 6g, 6i, 6k, 6m, 6n, 7, 7a, 9, 12a, 19, and 21, as amended by the Commodity Futures Modernization Act of 2000, Appendix E of Pub. L. No. 106–554, 114 Stat. 2763 (2000); 5 U.S.C. 552 and 552(b).

2. Section 15.03 is proposed to be amended by revising paragraph (b) to read as follows:

§ 15.03 Reporting levels.

* * * * *

(b) The quantities for the purpose of reports filed under Parts 17 and 18 of this chapter are as follows:

Commodity	Number of contracts
Agricultural:	
Wheat	100
Corn	150
Oats	60
Soybeans	100

[6] *See* section 5f of the Act, 7 U.S.C. 7f.

[7] *See* section 4f(a)(4) of the Act, 7 U.S.C. 6f(a)(4); 17 CFR 41.34. The Commission discussed the application of its large trader reporting system to notice-designated contract markets when it adopted its rules governing these markets. *See* 66 FR 44960 (Aug. 27, 2001).

[8] *See* 66 FR 43080 (Aug. 17, 2001)

[9] *See, e.g.,* 65 FR 14452 (Mar. 17, 2000).

[10] 47 FR 18618–20 (Apr. 30, 1982).

Commodity	Number of contracts
Soybean Oil	200
Soybean Meal	200
Cotton	50
Frozen Concentrated Orange Juice	50
Rough Rice	50
Live Cattle	100
Feeder Cattle	50
Lean Hogs	100
Sugar No. 11	400
Sugar No. 14	100
Cocoa	100
Coffee	50
Natural Resources:	
Copper	100
Gold	200
Silver Bullion	150
Platinum	50
No. 2 Heating Oil	250
Crude Oil, Sweet	350
Unleaded Gasoline	150
Natural Gas	175
Financial:	
Municipal Bond Index	300
3-month (13-Week) U.S. Treasury Bills	150
30-Year U.S. Treasury Bonds	1,000
10-Year U.S. Treasury Notes	1,000
5-Year U.S. Treasury Notes	800
2-Year U.S. Treasury Notes	500
3-Month Eurodollar Time Deposit Rates	1,000
30-Day Fed Funds	300
1-month LIBOR Rates	300
3-month Euroyen	100
Major-Foreign Currencies	400
Other Foreign Currencies	100
U.S. Dollar Index	50
S&P 500 Stock Price Index	1,000
E-Mini S&P Stock Price Index	300
S&P 400 Midcap Stock Index	100
Dow Jones Industrial Average Index	100
New York Stock Exchange Composite Index	50
Amex Major Market Index, Maxi	100
NASDAQ 100 Stock Index	100
Russell 2000 Stock Index	100
Value Line Average Index	50
NIKKEI Stock Index	100
Goldman Sachs Commodity Index	100
Security Futures Products:	
Individual Equity Security	1,000
Narrow-Based Index of Equity Securities	200
All Other Commodities	25

Issued in Washington, D.C., this 7th day of December, 2001, by the Commission.

Jean A. Webb,

Secretary of the Commission.

[FR Doc. 01–30812 Filed 12–12–01; 8:45 am]

BILLING CODE 6351–01–M

DEPARTMENT OF THE TREASURY

Internal Revenue Service

26 CFR Part 1

[REG–106186–98]

RIN 1545–AW36

Withdrawal of Proposed Regulations Relating to Certain Corporate Reorganizations Involving Disregarded Entities; Correction

AGENCY: Internal Revenue Service (IRS), Treasury.

ACTION: Correction to withdrawal of notice of proposed rulemaking.

SUMMARY: This document contains a correction to notice of proposed rulemaking (REG–106186–98) which was published in the **Federal Register** on Thursday, November 15, 2001 (66 FR 57400). This regulation relates to the withdrawal of proposed regulations relating to certain corporate reorganizations involving disregarded entities.

DATES: This correction applies as of November 15, 2001.

FOR FURTHER INFORMATION CONTACT: Reginald Mombrun, (202) 622–7750 (not a toll-free number).

SUPPLEMENTARY INFORMATION:

Background

The proposed regulations relating to certain corporate reorganizations involving disregarded entities that are the subject of this correction is under 26 U.S.C. 7805 of the Internal Revenue Code.

Need for Correction

As published, proposed regulations (REG–106186–00) contain an error which may prove to be misleading and is in need of clarification.

Correction of Publication

Accordingly, the publication of proposed regulation (REG–106186–00), which is the subject of FR Doc. 01–28671, is corrected as follows:

On page 57400, column 1, in the heading, the language ''(REG–106186–00)'' is corrected to read ''(REG–106186–98)''.

LaNita VanDyke,

Acting Chief, Regulations Unit, Associate Chief Counsel (Income Tax and Accounting).

[FR Doc. 01–30831 Filed 12–12–01; 8:45 am]

BILLING CODE 4830–01–P

DEPARTMENT OF THE TREASURY

Internal Revenue Service

26 CFR Parts 301 and 602

[REG–105344–01]

RIN 1545–AY77

Disclosure of Returns and Return Information by Other Agencies

AGENCY: Internal Revenue Service (IRS), Treasury.

ACTION: Notice of proposed rulemaking by cross-reference to temporary regulations.

SUMMARY: In the Rules and Regulations section of this issue of the **Federal Register**, the IRS is issuing a temporary regulation to enable the Commissioner to authorize Federal, state and local agencies with access to returns and return information under section 6103 of the Internal Revenue Code to redisclose such returns and return information, with the Commissioner's approval, to any authorized recipient set forth in section 6103 of the Internal Revenue Code, subject to the same restrictions and for the same purposes, as if the recipient had received the information from the IRS directly.

DATES: Written comments and electronic comments and requests for a public hearing must be received by February 14, 2002.

ADDRESSES: Send submissions to CC:ITA:RU (REG–105344–01), room 5226, Internal Revenue Service, POB 7604, Ben Franklin Station, Washington, DC 20044. Submissions may be delivered Monday through Friday between the hours of 8 a.m. and 5 p.m. to CC:ITA:RU (REG–105344–01), Courier's Desk, Internal Revenue Service, 1111 Constitution Avenue, NW., Washington, DC. Alternatively, taxpayers may submit comments electronically via the Internet by selecting the ''Tax Regs'' option on the IRS Home Page, or by submitting comments directly to the IRS Internet site: *http://www.irs.gov/prod/tax_regs/comments/html*.

FOR FURTHER INFORMATION CONTACT: Julie C. Schwartz, 202–622–4570 (not a toll-free number).

SUPPLEMENTARY INFORMATION:

Paperwork Reduction Act

The collection of information contained in this notice of proposed rulemaking has been submitted to the Office of Management and Budget for review in accordance with the Paperwork Reduction Act of 1995 (44 U.S.C. 3507(d)). Comments on the collection of information should be sent to the Office of Management and Budget, Attn: Desk Officer for the Department of the Treasury, Office of Information and Regulatory Affairs, Washington, DC 20503, with copies to the Internal Revenue Service, Attn: IRS Reports Clearance Officer, W:CAR:MP:FP:S, Washington, DC 20224. Comments on the collection of information should be received by February 11, 2002.

Comments are specifically requested concerning:

Whether the proposed collection of information is necessary for the proper performance of the functions of the Internal revenue Service, including whether the information will have practical utility;

The accuracy of the estimated burden associated with the proposed collection of information (see below);

How the quality, utility, and clarity of the information to be collected may be enhanced;

How the burden of complying with the proposed collection of information may be minimized, including through the application of automated collection techniques or other forms of information technology; and

Estimates of capital or start-up costs and costs of operation, maintenance, and purchase of service to provide information.

The collection of information in this proposed regulation is in 26 CFR 301.6103(p)(2)(B)–1T. This information is required for the Commissioner to authorize agencies with access to returns and return information under section 6103 to disclose such to other authorized recipients of returns and return information in accordance with section 6103. The collection of information is required to obtain a benefit. The likely respondents and recordkeepers are federal agencies and state or local governments.

Estimated total annual reporting and/or recordkeeping burden: 11 hours.

Estimated average annual burden hours per respondent and/or recordkeeper: 1 hour.

Estimated number of respondents and/or recordkeepers: 11.

Estimated annual frequency of responses: Once.

An agency may not conduct or sponsor, and a person is not required to respond to, a collection of information unless it displays a valid control number assigned by the Office of Management and Budget.

Books or records relating to a collection of information must be retained as long as their contents may become material in the administration of an internal revenue law. Generally, tax returns and return information are confidential, as required by 26 U.S.C. 6103.

Background

Section 6103(p)(2)(B) provides that return information disclosed pursuant to the Code may be disclosed by any mode or means that the Secretary determines necessary or appropriate. 26 CFR 301.6103(p)(2)(B)–1 currently permits certain recipients of returns and return information under section 6103, with the Commissioner's approval, to disclose returns and return information to certain other permissible recipients under section 6103. Specifically, the existing regulation permits disclosure by Federal agencies, with the Commissioner's approval, to (1) other Federal agencies, (2) state tax agencies, (3) the General Accounting Office, (4) Federal, state and local child support enforcement agencies, (5) persons described in section 6103(c) (person designated in a taxpayer consent), and (6) persons described in section 6103(e) (person with a material interest).

The Consolidated Appropriations Act, 2001, Pub. L. No. 106–554 (114 Stat. 2763), was signed into law on December 21, 2000. Section 1 of that Act enacted into law H.R. 5662, the Community Renewal Tax Relief Act of 2000. Section 310 of the Community Renewal Tax Relief Act of 2000 added section 6103(j)(6) to the Code, authorizing the

Commissioner to disclose return information to the Congressional Budget Office (CBO) for the purpose of, but only to the extent necessary for, long term models of the Social Security and Medicare programs. The conference report, H. R. Conf. Rep. No. 106–1033, at 1020–21 (2000), provides that it is the intent of Congress that all requests for information made by CBO under this provision be made to the Commissioner, who will use his authority under section 6103(p)(2) such that the Social Security Administration (SSA) or other agency can furnish the information directly to CBO for the purpose of CBO's long term models of Social Security and Medicare. SSA, not IRS, collects and maintains much of the information sought by CBO and also receives the tax information CBO seeks under other provisions of section 6103. However, section 301.6103(p)(2)(B)–1 in its current form would not allow the Commissioner to authorize SSA to redisclose return information properly in its possession to CBO, an authorized recipient of the information under section 6103(j)(6). Updating the regulation would allow SSA to make return information in its possession available to CBO to the extent authorized by section 6103(j)(6).

There are other situations, similar to that found under section 6103(j)(6), where it is more efficient for returns and return information in the possession of one authorized agency recipient, to be disclosed by such agency to another statutorily authorized recipient. The inability of agencies, including Federal, state and local agencies, to share returns and return information between themselves or even inside a single agency, even where the information is more readily available from an agency other than the IRS, was highlighted by the Department of the Treasury on pages 89–90 of its October 2000 Report to the Congress on the Scope and Use of Taxpayer Confidentiality and Disclosure Provisions. The report notes, for example, that currently a single agency within a state (or even a single caseworker) may be administering both child support under Title IV–D of the Social Security Act and welfare under Title IV–A of the Social Security Act. The agency may receive return information under both section 6103(l)(6) and section 6103(l)(7) to aid the agency in making determinations of eligibility for these programs, but the current regulation does not permit even intra-agency pooling or sharing of these data. The report notes that both intra- and inter-agency data sharing with respect to common data elements could be authorized by amendment to the Treasury regulations. Updating the regulation would allow the IRS to authorize such redisclosure in appropriate situations.

The text of the proposed temporary regulation also serves as the text of this proposed regulation. The preamble to the temporary regulation contains a full explanation of the reasons underlying the issuance of the proposed regulation.

Special Analyses

It has been determined that this notice of proposed rulemaking is not a significant regulatory action as defined in Executive Order 12866. Therefore, a regulatory assessment is not required. It also has been determined that section 553(b) of the Administrative Procedure Act (5 U.S.C. chapter 5) and the Regulatory Flexibility Act (5 U.S.C. chapter 6) do not apply to these regulations, and, therefore, a Regulatory Flexibility Analysis is not required. Pursuant to section 7805(f) of the Code, this notice of proposed rulemaking will be submitted to the Chief Counsel of the Small Business Administration for comment on its impact on small businesses.

Comments and Request for a Public Hearing

Before this proposed regulation is adopted as a final regulation, consideration will be given to any electronic and written comments (a signed original and eight (8) copies) that are submitted timely to the IRS. All comments will be available for public inspection and copying. A public hearing may be scheduled if requested in writing by a person that timely submits written comments. If a public hearing is scheduled, notice of the date, time, and place for the hearing will be published in the **Federal Register**.

Drafting Information

The principal author of this regulation is Julie C. Schwartz, Office of the Associate Chief Counsel (Procedure and Administration), Disclosure and Privacy Law Division.

List of Subjects

26 CFR Part 301

Employment taxes, Estate taxes, Excise taxes, Gift taxes, Income taxes, Penalties, Reporting and recordkeeping requirements.

26 CFR Part 602

Reporting and recordkeeping requirements.

Amendments to the Regulations

Accordingly, 26 CFR parts 301 and 602 are proposed to be amended as follows:

PART 301—PROCEDURE AND ADMINISTRATION

Paragraph 1. The authority citation for part 301 is amended by adding an entry in numerical order to read as follows:

Authority: 26 U.S.C. 7805 * * *.

Section 301.6103(p)(2)(B)–1 also issued under 26 U.S.C. 6103(p)(2); * * *.

§ 301.6103(p)(2)(B)–1 [Removed]

Par. 2. Section 301.6103(p)(2)(B)–1 is removed.

Par. 3. Section 301.6103(p)(2)(B)–1T is added to read as follows:

[The text of this proposed section is the same as the text of § 301.6103(p)(2)(B)–1T published elsewhere in this issue of the **Federal Register**].

PART 602—OMB CONTROL NUMBERS UNDER THE PAPERWORK REDUCTION ACT

Par. 4. The authority citation for part 602 continues to read as follows:

Authority: 26 U.S.C. 7805 * * *.

Par. 5. In § 602.101, paragraph (b) is amended by adding an entry to the table in numerical order to read as follows:

[The text of this proposed section is the same as the text of § 602.101 published elsewhere in this issue of the **Federal Register**].

Robert E. Wenzel,

Deputy Commissioner of Internal Revenue.

[FR Doc. 01–30620 Filed 12–12–01; 8:45 am]

BILLING CODE 4830–01–P

ENVIRONMENTAL PROTECTION AGENCY

40 CFR Part 300

[FRL–7116–7]

National Oil and Hazardous Substances Pollution Contingency Plan; National Priorities List

AGENCY: Environmental Protection Agency.

ACTION: Notice of intent to delete the White Bridge Road property of the Asbestos Dump Superfund Site, Operable Unit Two, from the National Priorities List.

SUMMARY: The Environmental Protection Agency (EPA) Region II Office

announces its intent to delete the White Bridge Road property of the Asbestos Dump Superfund Site, Operable Unit (OU) 2, from the National Priorities List (NPL) and requests public comment on this action. The Asbestos Dump site is listed in the NPL as being located in Millington, NJ; however, the portion of the site which is the subject of this proposal for partial delisting, the White Bridge Road property, is located in Long Hill Township, NJ. The NPL constitutes Appendix B to the National Oil and Hazardous Substances Pollution Contingency Plan (NCP), 40 CFR part 300, which EPA promulgated pursuant to section 105 of the Comprehensive Environmental Response, Compensation, and Liability Act (CERCLA), as amended. EPA and the State of New Jersey, through the Department of Environmental Protection, have determined that all appropriate remedial actions have been completed at the White Bridge Road parcel and no further fund-financed remedial action is appropriate under CERCLA. In addition, EPA and the State of New Jersey have determined that all remedial actions taken to date at the White Bridge Road property are protective of public health and the environment. This partial deletion pertains only to the White Bridge Road property of OU 2 of the Asbestos Dump Site. The other properties which comprise the site are the Millington property (OU1), the New Vernon Road property (OU2) and the Deitzman Tract (OU3). All properties comprising the site, other than the White Bridge Road property, will remain on the NPL. No further response actions, other than Operation and Maintenance and enforcement, are planned for any of the properties comprising the Asbestos Dump site.

This deletion of the White Bridge Road property of the Asbestos Dump site is proposed in accordance with 40 CFR 300.425(e) and the Notice of Policy Change: Partial Deletion of Sites listed on the NPL, published in the **Federal Register** on November 1, 1995.

DATES: The EPA will accept comments concerning its proposal for partial deletion for thirty (30) days after publication of this document in the **Federal Register** and a newspaper of record.

ADDRESSES: Comments may be mailed to: Ms. Kim O'Connell, Section Chief, Emergency and Remedial Response Division, U.S. Environmental Protection Agency, Region II, 290 Broadway, 19th Floor, New York, NY 10007–1866.

Comprehensive information on the White Bridge Road property of the Asbestos Dump Superfund Site as well as information specific to this proposed partial deletion is contained in the Administrative Record and is available for viewing, by appointment only, at: U.S. EPA Records Center, 290 Broadway—18th Floor, New York, New York 10007–1866.

Hours: 9 am to 5 pm—Monday through Friday. Contact the Records Center at 212–637–4308.

Information on the site is also available for viewing at the Information Repository which is located at: Long Hill Township Free Public Library, 91 Central Avenue, Stirling, New Jersey 07930, (908) 647–2088.

FOR FURTHER INFORMATION CONTACT: Ms. Kim O'Connell, Section Chief, U.S. Environmental Protection Agency, Region II, 290 Broadway, 19th Floor, New York, NY 10007–1866, phone: (212) 637–4399; fax: (212) 637–4429; e-mail: *oconnell.kim@epa.gov.*

SUPPLEMENTARY INFORMATION:

Table of Contents

I. Introduction
II. NPL Deletion Criteria
III. Deletion Procedures
IV. Basis for Intended Partial Site Deletion

I. Introduction

The United States Environmental Protection Agency (EPA) Region II announces its intent to delete the White Bridge Road property of the Asbestos Dump Site, Operable Unit 2, located in Long Hill Township, Morris County, New Jersey from the National Priorities List (NPL) and requests public comment on this action. The Asbestos Dump site is listed in the NPL as being located in Millington, NJ; however, the portion of the site which is the subject of this proposal for partial deletion, the White Bridge Road property, is located in Long Hill Township, NJ. The NPL constitutes Appendix B to the National Oil and Hazardous Substances Pollution Contingency Plan (NCP), 40 CFR part 300, which EPA promulgated pursuant to section 105 of the Comprehensive Environmental Response, Compensation, and Liability Act (CERCLA), as amended. This proposal for partial deletion pertains to the White Bridge Road property of the Asbestos Dump Site—Operable Unit (OU) 2. The White Bridge Road property of the site is a privately owned twelve acre property located on Block 225, Lots 79, 35.01 and 35.02 on White Bridge Road in Long Hill Township, New Jersey. The property has a street address of 651 White Bridge Road in Long Hill Township, NJ. An occupied residence and an active horse boarding facility are located on the property. The property is bounded by White Bridge Road to the north, the Great Swamp National Wildlife Refuge to the east and southeast, Black Brook to the southwest and a vacant wooded lot to the west.

At the White Bridge Road property, EPA implemented extensive soil and air sampling, conducted a Remedial Investigation and Feasibility Study (RI/FS), conducted a risk assessment, selected a remedy and implemented the selected remedial action on asbestos contaminated materials (ACM) on the property.

EPA proposes to delete the White Bridge Road property because all appropriate CERCLA response activities have been completed. The three other properties which constitute the site, Operable Unit 1 (the Millington site), the New Vernon Road property of OU2, and OU3 (the Deitzman tract), will remain on the NPL and are not the subject of this partial deletion.

The NPL is a list maintained by EPA of sites that EPA has determined present a significant risk to public health or the environment. Sites on the NPL may be the subject of remedial actions financed by the Hazardous Substance Superfund (Fund). Pursuant to 40 CFR 300.425(e) of the NCP, any site or portion of a site deleted from the NPL remains eligible for Fund-financed remedial actions if conditions at the site warrant such action.

EPA will accept comments concerning its intent for partial deletion for thirty (30) days after publication of this notice in the **Federal Register** and a newspaper of record.

II. NPL Deletion Criteria

The NCP establishes the criteria the Agency uses to delete sites from the NPL. In accordance with 40 CFR 300.425 (e), sites may be deleted from the NPL where no further response is appropriate to protect public health or the environment. In making this determination, EPA, in consultation with the state, will consider whether any of the following criteria have been met:

(i) Responsible or other parties have implemented all appropriate response actions required; or

(ii) All appropriate Fund-financed responses under CERCLA have been implemented and no further response action is appropriate; or

(iii) Based on a remedial investigation, it has been determined that the release poses no significant threat to public health or the environment and, therefore, taking remedial measures is not appropriate.

Deletion of a portion of a site from the NPL does not preclude eligibility for

subsequent Fund-financed actions at the area deleted if future site conditions warrant such actions. Section 300.425(e)(3) of the NCP provides that Fund-financed actions may be taken at sites that have been deleted from the NPL. A partial deletion of a site from the NPL does not affect or impede EPA's ability to conduct CERCLA response activities at areas not deleted and remaining on the NPL. In addition, deletion of a portion of a site from the NPL does not affect the liability of responsible parties or impede Agency efforts to recover costs associated with response efforts.

III. Deletion Procedures

Deletion of a portion of a site from the NPL does not itself create, alter, or revoke any person's rights or obligations. The NPL is designed primarily for informational purposes and to assist Agency management.

The following procedures were used for the intended deletion of the White Bridge Road property of the Asbestos Dump Superfund Site:

1. EPA conducted an RI/FS to characterize and evaluate site contamination, conducted a risk assessment and on September 27, 1991 selected a remedial action. On October 20, 1993, EPA modified the remedy in an Explanation of Significant Differences.

2. The remedial design of the selected remedy for the site was completed in 1993. Construction of the remedy occurred in 1994 and 1995. In 1995, EPA issued a Cure Notice requiring additional work. In 1996, the additional work was completed and in 1997, the final Remedial Action Report for the site was issued.

3. EPA has recommended the partial deletion and has prepared the relevant documents.

4. The State of New Jersey, through the New Jersey Department of Environmental Protection, has concurred with the partial deletion decision in a letter dated November 20, 2001.

5. Concurrent with this national Notice of Intent for Partial Deletion, a notice has been published in a local newspaper and has been distributed to appropriate federal, state and local officials, and other interested parties. This notice announces a thirty-day public comment period on the deletion package, which starts on the date of publication of this notice in the **Federal Register** and a newspaper of record.

6. The Region has made all relevant documents available in the Regional Office and the local site information repository.

This **Federal Register** notice, and a concurrent notice in a newspaper of record, announce the initiation of a thirty (30) day public comment period and the availability of the Notice of Intent for Partial Deletion. The public is asked to comment on EPA's proposal to delete the White Bridge Road property from the NPL. All critical documents needed to evaluate EPA's decision are included in the Administrative Record developed for the site, which is available for review at the information repositories.

Upon completion of the thirty (30) day public comment period, EPA will evaluate all comments received before issuing the final decision on the partial deletion. EPA will prepare a Responsiveness Summary, if appropriate, for comments received during the public comment period and will address concerns presented in the comments. The Responsiveness Summary will be made available to the public at the information repositories. If, after review of all public comments, EPA determines that the partial deletion from the NPL is appropriate, EPA will publish a final notice of partial deletion in the **Federal Register**. Deletion of the White Bridge Road property does not actually occur until the final Notice of Partial Deletion is published in the **Federal Register**.

IV. Basis for Intended Partial Site Deletion

The following provides EPA's rationale for deletion of the White Bridge Road property of the Asbestos Dump Site from the NPL and EPA's finding that the criteria in 40 CFR 300.425(e) are satisfied:

Background

The Asbestos Dump Site is being addressed in three phases, referred to as Operable Units. OU1 is called the Millington Site; OU2 consists of two privately owned, residential properties located in Long Hill Township, New Jersey, called the New Vernon Road property and the White Bridge Road property. The White Bridge Road property is the subject of this Notice of Intent for Partial Deletion. The Dietzman Tract comprises OU3.

From 1945 through 1969, the White Bridge Road property was used for farming. In 1970, the parcel was purchased by the current residents. From 1970 to 1975, ACM, which included asbestos tiles and siding from the National Gypsum Company (NGC), was disposed of on the property. After these disposal activities, the current owner converted the property into a horse farm with stables. A horse riding track was situated 350 feet from the house on a large ACM disposal area. Horse stables in the east-central portion of the property, along with a large grazing field, are located west of the horse riding track and wetland areas. Due to the risk to human health and the environment posed by the release of asbestos fibers, the Asbestos Dump Site was listed on the NPL on September 1, 1983.

Selected Remedy

On April 1, 1985, EPA issued an Administrative Order to the NGC to conduct the RI/FS at the four areas comprising the Asbestos Dump Site. Upon review of the draft May 1987 RI report prepared by NGC, EPA determined that the RI failed to adequately characterize the extent of contamination at the White Bridge Road property. In August and September of 1990, EPA collected and analyzed soil and dust samples at the White Bridge Road property and found high levels of asbestos. On September 30, 1990, the Agency for Toxic Substances and Disease Registry (ATSDR) issued a health consultation that concluded that the asbestos fill at the White Bridge Road property posed an imminent and substantial health and safety threat to residents and workers. On December 20, 1990, a Public Health Advisory was issued for the White Bridge Road property that required residents be dissociated from exposure to site-related asbestos. Based on this, an immediate removal action at the property was implemented.

Removal activities at the White Bridge Road property were conducted to temporarily reduce the potential for asbestos fibers to become airborne and to restrict access. These activities included: placement of signs and temporary fences to restrict access to areas of visible surface contamination, covering of areas of contamination with geotextile fabric (the riding track and portions of the access road were covered), and air sampling.

In conjunction with the removal activities, an RI/FS was initiated by EPA in the fall of 1990 to fully characterize the extent of asbestos. The RI included a hydrogeological investigation and sampling and subsequent laboratory analysis of subsurface soils, sediments, surface water, ground water, potable water, and air. RI field work was completed in the fall of 1990. The RI and FS Reports issued in June 1991 provided detailed summaries and discussion of sampling activities at the Site, the results of the risk assessment performed, and an analysis of remedial alternatives. The FS concluded that if

no action were taken at the White Bridge Road property, a potential health threat to the public and environment would result through inhalation of asbestos. The FS provided a detailed analysis of a number of remedial alternatives which were developed to address site contamination. On July 8, 1991, a Proposed Plan describing EPA's preferred remedy was released for a 30-day public comment period. EPA held a public meeting on July 17, 1991 to discuss the RI/FS results, remedial alternatives, and the Proposed Plan. The meeting was attended by members of the local community and other interested parties.

On September 27, 1991, after consideration of all comments received during the public comment period, EPA issued a Record of Decision (ROD) for the White Bridge Road property of the Asbestos Dump Site. The remedy selected through the ROD included: in-situ solidification/stabilization of asbestos contaminated soils (all ACM present above 0.5 percent by weight of asbestos was addressed); appropriate environmental monitoring to confirm the effectiveness of the remedy; and implementation of institutional controls to assure the integrity of the treated waste.

Response Actions

Prior to the implementation of the remedy, TRC Environmental Corporation (TRC), under contract to EPA, performed a treatability study. The objective of the study was to determine design specifications and to identify limitations and potential problems that could arise from solidification of ACM present at the White Bridge Road property. The Treatability Study Report, dated February 3, 1993, indicated that ACM would not be adequately solidified below the water table. Consequently, the ROD remedy was modified with an Explanation of Significant Differences (ESD) on October 20, 1993 to limit the extent of the solidification/stabilization to the ACM above the water table. In addition, the ESD provided for the addition of a synthetic membrane liner to cover the treated ACM and the placement of geotextile fabric in the trench around the solidified ACM.

The Remedial Design (RD) Report, including drawings and specifications, was prepared by TAMS Consultants, Inc. and TRC Environmental Corporation in January 1993. The design addressed details regarding: excavation and consolidation of ACM; solidification/stabilization of the ACM above the ground water table; construction of a final protective geomembrane/soil cover; construction of a perimeter infiltration trench; and final grading, revegetation, drainage, and erosion controls.

In April 1994, EPA's contractor, CDM Federal Programs Corporation awarded the construction contract to Geo-Con, Inc. for the White Bridge Road construction activities.

EPA issued a Notice to Proceed to the contractor on April 4, 1994. Construction activities were performed in two phases. The first phase included work activities such as excavation, solidification, backfilling and construction of the impermeable cover. Confirmatory sampling of the limits of ACM and excavation of contaminants began in August of 1994. The solidification/stabilization of approximately 9,900 cubic yards (cy) of ACM was initiated on October 10, 1994. The final depth of the solidified ACM is approximately two and a half feet below the ground surface. The geomembrane installation process began on November 15, 1994.

The second phase of construction consisted of site restoration. Site restoration included topsoil placement, cap fence construction, monitoring well installation, stockpile removal, seeding, and landscape replacement. This phase was conducted between March and November 1995.

After implementation of the remedy, EPA discovered that some of the fill material which was used by the contractor on the White Bridge Road property, known as ''ODAAT fill,'' had originated from a facility subject to the New Jersey Cleanup Responsibility Act, now the Industrial Site Recovery Act. On April 7, 1995, EPA issued a Cure Notice to CDM/FPC indicating that this material failed to meet the contract specifications for fill. Approximately 1,010 cubic yards of this unacceptable fill material was placed in three areas of the property.

To address this situation, on August 15, 1995, EPA approved CDM/FPC's Cure Notice Response Workplan for White Bridge Road. The work performed under the Cure Notice Response Workplan was completed on August 28, 1995, and was performed at no cost to EPA or the State.

The subcontractor completed remedial construction activities in October 1995. EPA, CDM/FPC, and Geo-Con, Inc. held a pre-final site inspection on October 26, 1995. As a result, low areas over the impermeable cover were filled and graded with topsoil. All site restoration work was completed in the fall of 1996.

In December 1997, EPA approved the Final Remedial Action Report, prepared by CDM/FPC, which describes all construction activities.

Community Involvement

Public participation activities for the White Bridge Road property of the Asbestos Dump Site, OU2 have been satisfied as required in CERCLA section 113(k), 42 U.S.C. 9613(k), and section 117, 42 U.S.C. 9617. The Remedial Investigation Report, the Feasibility Study Report, the ROD, ESD, Final Remedial Action Report, as well as other documents and information which EPA relied on or considered in recommending that no further action is necessary at the White Bridge Road property, and that the property should be deleted from the NPL, are available for the public to review at the information repositories.

Long Term Maintenance of the Remedy

On January 5, 2001, the owners of the White Bridge Road property filed a Deed Notice with the Morris County Clerk. EPA and the State agreed on the terms of the Deed Notice, which require the property owners to conduct periodic maintenance activities on the cap. The State of New Jersey will be responsible for performing other Operation and Maintenance activities.

Based on the completion of the remedial action activities at the White Bridge Road property of the Asbestos Dump Site, OU2, there are no further response actions, other than maintenance activities, planned or scheduled for this property. Pursuant to CERCLA, if EPA selects remedies at sites which result in hazardous substances, pollutants or contaminants remaining at the site, five year reviews must be performed. A five year review was performed for the Asbestos Dump Site, including the White Bridge Road property in September 2000 and additional five year reviews will be conducted at the White Bridge Road property since asbestos contaminated materials remain on the property.

EPA does not believe that any future response actions, other than maintenance activities to be conducted by the site owners and by the State, will be needed. If future conditions warrant such action, the White Bridge Road property of the Asbestos Dump Site will remain eligible for future Fund-financed response actions. Furthermore, this partial deletion of the White Bridge Road property does not alter the status of the other properties comprising the Asbestos Dump site, which are not proposed for deletion at this time and will remain on the NPL.

In a letter dated November 20, 2001, the New Jersey Department of

Environmental Protection concurred with EPA that all appropriate CERCLA response actions have been completed at the White Bridge Road property and protection of human health and the environment has been achieved. Therefore, EPA makes this proposal to delete the White Bridge Road property of the Asbestos Dump Site from the NPL.

Dated: November 26, 2001.

William J. Muszynski,

Acting Regional Administrator—Region II.

[FR Doc. 01–30740 Filed 12–12–01; 8:45 am]

BILLING CODE 6560–50–P

NATIONAL AERONAUTICS AND SPACE ADMINISTRATION

48 CFR Parts 1823, 1836 and 1852

Safety and Health; Notice

AGENCY: National Aeronautics and Space Administration (NASA).

ACTION: Proposed rule.

SUMMARY: This rule proposes to amend the NASA FAR Supplement (NFS) by revising the prescription for the use of NASA Safety and Health solicitation provisions and contract clauses; removing references to the Service Contract Act (SCA) and Walsh-Healey Public Contracts Act regulations; adding references to the Occupational Safety and Health Act (OSHA) and Department of Transportation (DOT) regulations; and clarifying when a Safety and Health Plan is to be included in a contract or solicitation. This proposed rule would also require the use of NASA's safety and health provisions instead of the FAR Accident Prevention clause, and allow for oral notification, with written confirmation to the contractor, of Safety and Health noncompliance that may pose a serious or imminent danger to safety and health.

DATES: Comments should be submitted to NASA at the address below on or before February 11, 2002.

ADDRESSES: Interested parties should submit written comments to Jeff Cullen, NASA Headquarters Office of Procurement, Contract Management Division (Code HK), Washington, DC 20546. Comments may also be submitted by e-mail to *jcullen@hq.nasa.gov.*

FOR FURTHER INFORMATION CONTACT: Jeff Cullen, (202) 358–1784, *jcullen@hq.nasa.gov.*

SUPPLEMENTARY INFORMATION:

A. Background

Reductions in the number of incidents involving injury or death to personnel, and in lost or restricted workdays can result from an emphasis on safety and occupational health. These reductions enhance the probability of mission success by decreasing development time, cycle times, operational delays and costs. Since NASA contracts comprise approximately 80 percent of its budget, NASA recognizes that for it to achieve mission success, it is critically important that NASA contractors also emphasize safety and occupational health. Currently, NASA requires the inclusion of a NASA Safety and Health clause and submission of a contractor Safety and Health Plan for contracts that are greater than $1 million, involve construction, or have hazardous deliverable end items or operations. Exclusion of the clause has been allowed when the Contracting Officer determined that Walsh-Healey or Service Contract Act (if applicable) regulations constituted adequate safety and health protection. This proposed rule removes the dollar threshold from the Safety and Health clause prescription since safety and health requirements should be determined by the risks rather than cost of the contract requirements. Furthermore, to assure that contractors are held to the same standards for mishap prevention as the Government, the proposed guidance requires use of a Safety and Health clause and submission of a Safety and Health Plan when performance is on a Government facility or when assessed risk warrants inclusion. This proposed rule further revises the conditions that must be met for excluding the clause from contracts, reflecting the greater Government and industry use of Occupational Safety and Health Administration (OSHA) and Department of Transportation (DOT), rather than Walsh-Healey or Service Contract Act safety and health regulations, and includes new NFS guidance on use of the NASA Safety and Health clause instead of the FAR Accident Prevention clause. Finally, this proposed rule makes the requirements for the use of the NASA Safety and Health clause for subcontracts consistent with prime contract requirements.

B. Paperwork Reduction Act

The Paperwork Reduction Act does not apply because the changes to the NFS do not impose any recordkeeping or information collection requirements, or collections of information from offerors, contractors, or members of the public which require the approval of the Office of Management and Budget under 41 U.S.C. 3501, *et seq.*

List of Subjects in 48 CFR Parts 1823, 1836 and 1852

Government procurement.

Tom Luedtke,

Associate Administrator for Procurement.

Accordingly, 48 CFR Parts 1823, 1836 and 1852 are proposed to be amended as follows:

1. The authority citation for 48 CFR Parts 1823, 1836 and 1852 continues to read as follows:

Authority: 42 U.S.C. 2473(c)(1)

PART 1823—ENVIRONMENT, CONSERVATION, OCCUPATIONAL SAFETY, AND DRUG-FREE WORKPLACE

2. Amend section 1823.7001 in the second sentence of paragraph (c) by removing ''clause'' and adding ''provision'' in its place; and revising paragraphs (a) and (b) to read as follows:

1823.7001 NASA solicitation provisions and contract clauses.

(a) The clause at 1852.223–70, Safety and Health, shall be included in all solicitations and contracts when one or more of the following conditions exist:

(1) The work will be conducted completely or partly on premises owned or controlled by the Government.

(2) The work includes construction, alteration, or repair of facilities in excess of the simplified acquisition threshold.

(3) The work, regardless of place of performance, involves hazards that could endanger the public, astronauts and pilots, the NASA workforce (including contractor employees working on NASA contracts), or high value equipment or property, and the hazards are not adequately addressed by Occupational Safety and Health Administration (OSHA) or Department of Transportation (DOT) regulations (if applicable).

(4) When the assessed risk and consequences of a failure to properly manage and control the hazard(s) warrants use of the clause.

(b) The clause prescribed in paragraph (a) of this section may be excluded, regardless of place of performance, when the contracting officer, with the approval of the installation official(s) responsible for matters of safety and occupational health, determines that the application of OSHA and DOT regulations constitutes adequate safety and occupational health protection.

* * * * *

PART 1836—CONSTRUCTION AND ARCHITECT–ENGINEER CONTRACTS

3. Add section 1836.513 to read as follows:

1836.513 Accident prevention.

The contracting officer must insert the clause at 1852.223–70, Safety and Health, in lieu of FAR clause 52.236–13, Accident Prevention, and its Alternate I.

PART 1852—SOLICITATION PROVISIONS AND CONTRACT CLAUSES

4. Amend the clause at section 1852.223–70 by revising the date of the clause; revising paragraphs (f)(1) and (g); redesignating paragraphs (h) and (i) as (i) and (j) respectively, and adding a new paragraph (h) to read as follows:

1852.223–70 Safety and Health.

* * * * *

SAFETY AND HEALTH

(XX/XX)

* * * * *

(f) (1) The Contracting Officer may notify the Contractor in writing of any noncompliance with this clause and specify corrective actions to be taken. In situations where the Contracting Officer becomes aware of noncompliance that may pose a serious or imminent danger to safety and health of the public, astronauts and pilots, the NASA workforce (including contractor employees working on NASA contracts), or high value mission critical equipment or property, the Contracting Officer shall notify the Contractor orally, with written confirmation. The Contractor shall promptly take and report any necessary corrective action. The Government may pursue appropriate remedies in the event the Contractor fails to promptly take the necessary corrective action.

* * * * *

(g) The Contractor (or subcontractor or supplier) shall insert the substance of this clause, including this paragraph (g) and any applicable Schedule provisions and clauses, with appropriate changes of designations of the parties, in all solicitations and subcontracts of every tier, when one or more of the following conditions exist:

(1) The work will be conducted completely or partly on premises owned or controlled by the Government.

(2) The work includes construction, alteration, or repair of facilities in excess of the simplified acquisition threshold.

(3) The work, regardless of place of performance, involves hazards that could endanger the public, astronauts and pilots, the NASA workforce (including Contractor employees working on NASA contracts), or high value equipment or property, and the hazards are not adequately addressed by Occupational Safety and Health Administration (OSHA) or Department of Transportation (DOT) regulations (if applicable).

(4) When the Contractor (or subcontractor or supplier) determines that the assessed risk and consequences of a failure to properly manage and control the hazard(s) warrants use of the clause.

(h) The Contractor (or subcontractor or supplier) may exclude the provisions of paragraph (g) from its solicitation(s) and subcontract(s) of every tier when it determines that the clause is not necessary because the application of the OSHA and DOT (if applicable) regulations constitute adequate safety and occupational health protection. When a determination is made to exclude the provisions of paragraph (g) from a solicitation and subcontract, the Contractor must notify and provide the basis for the determination to the Contracting Officer. In subcontracts of every tier above the micro-purchase threshold for which paragraph (g) does not apply, the Contractor (or subcontractor or supplier) shall insert the substance of paragraphs (a), (b), (c), and (f) of this clause).

* * * * *

5. Amend the clause at section 1852.223–72 by revising the date of the clause, and revising paragraph (d) to read as follows:

1852.223–72 Safety and Health (Short Form).

* * * * *

Safety and Health (Short Form)

(XX/XX)

* * * * *

(d) The Contracting Officer may notify the Contractor in writing of any noncompliance with this clause and specify corrective actions to be taken. In situations where the Contracting Officer becomes aware of noncompliance that may pose a serious or imminent danger to safety and health of the public, astronauts and pilots, the NASA workforce (including contractor employees working on NASA contracts), or high value mission critical equipment or property, the Contracting Officer shall notify the Contractor orally, with written confirmation. The Contractor shall promptly take and report any necessary corrective action. The Government may pursue appropriate remedies in the event the Contractor fails to promptly take the necessary corrective action.

* * * * *

6. Revise the clause at section 1852.223–73 and the introductory text of Alternate I to the clause to read as follows:

1852.223–73 Safety and Health Plan.

* * * * *

Safety and Health Plan

(XX/XX)

(a) The offeror shall submit a detailed safety and occupational health plan as part of its proposal (see NPG 8715.3, NASA Safety Manual, Appendices). The plan shall include a detailed discussion of the policies, procedures, and techniques that will be used to ensure the safety and occupational health of Contractor employees and to ensure the safety of all working conditions throughout the performance of the contract.

(b) When applicable, the plan shall address the policies, procedures, and techniques that will be used to ensure the safety and occupational health of the public, astronauts and pilots, the NASA workforce (including Contractor employees working on NASA contracts), and high-value equipment and property.

(c) The plan shall similarly address subcontractor employee safety and occupational health for those proposed subcontracts that contain one or more of the following conditions:

(1) The work will be conducted completely or partly on premises owned or controlled by the government.

(2) The work includes construction, alteration, or repair of facilities in excess of the simplified acquisition threshold.

(3) The work, regardless of place of performance, involves hazards that could endanger the public, astronauts and pilots, the NASA workforce (including Contractor employees working on NASA contracts), or high value equipment or property, and the hazards are not adequately addressed by Occupational Safety and Health Administration (OSHA) or Department of Transportation (DOT) regulations (if applicable).

(4) When the assessed risk and consequences of a failure to properly manage and control the hazards warrants use of the clause.

(d) This plan, as approved by the Contracting Officer, will be included in any resulting contract.

(End of provision).

Alternate I

(XX/XX)

As prescribed in 1823.7001(c), delete the first sentence in paragraph (a) of the basic provision and substitute the following:

* * * * *

[FR Doc. 01–30772 Filed 12–12–01; 8:45 am]

BILLING CODE 7510–01–P

DEPARTMENT OF COMMERCE

National Oceanic and Atmospheric Administration

50 CFR Part 648

[Docket No. 011129286–1286–01; I.D. 110601B]

RIN 0648–AP65

Fisheries of the Northeastern United States; Summer Flounder, Scup, and Black Sea Bass; Quota Counting Procedures

AGENCY: National Marine Fisheries Service (NMFS), National Oceanic and Atmospheric Administration (NOAA), Commerce.

ACTION: Proposed rule; request for comments.

SUMMARY: NMFS proposes a regulatory amendment that would establish cut-off dates for using landings data from the commercial summer flounder, scup, and black sea bass fisheries to calculate quota overages. The establishment of landings cut-off dates for these fisheries would enable NMFS to establish final adjusted quotas before the beginning of the fishing year on January 1. NMFS also proposes to remove the regulatory language that specifies publication dates for proposed annual summer flounder, scup, and black sea bass fishing measures.

DATES: Public comments must be received on or before December 28, 2001.

ADDRESSES: Comments on the proposed rule should be sent to Patricia A. Kurkul, Regional Administrator, Northeast Region, NMFS, One Blackburn Drive, Gloucester, MA 01930–2298. Mark the outside of the envelope ''Comments on regulatory amendment.'' Comments may also be submitted via facsimile (fax) to 978–281–9135. Comments will not be accepted if submitted via e-mail or the Internet.

Copies of the Environmental Assessment (EA) and Regulatory Impact Review (RIR) are available at the above address. They are also accessible via the Internet at *http://www.nero.nmfs.gov*.

FOR FURTHER INFORMATION CONTACT: Allison Ferreira, Fishery Management Specialist, 978–281–9103, Allison.Ferreira@noaa.gov.

SUPPLEMENTARY INFORMATION:

Background

The FMP requires that NMFS compile all landings information on summer flounder, scup, and black sea bass and compare these landings to the quotas allocated to those fisheries. Landings in excess of quota allocations (overages) are required to be deducted from the quota allocations for the following year. The annual quota allocations are specified through a process that culminates in the publication of final specifications, which are scheduled to be published prior to January 1 each year. However, because the fishing year for these fisheries does not end until December 31, it is impossible to have a final accounting of annual landings at the time the annual specifications are published for the fishing year beginning January 1. As a result, NMFS has had to make overage adjustments during the fishing year, when overages were identified.

This proposed regulatory amendment would resolve the timing problems associated with the overage provisions of the FMP by establishing cut-off dates for commercial summer flounder, scup, and black sea bass landings data to be used in setting quotas for the upcoming year. If, during the fishing year, NMFS discovers that any overage deduction was made in error, e.g., based on calculated landings that exceeded actual landings for the period concerned, NMFS would restore all or part of the overage to the appropriate quota allocation and announce the restoration by publishing a document in the **Federal Register**. The purpose of this action is to allow completion of the compilation of landings data used in making adjustments to the next fishing year's quotas in sufficient time to include all necessary adjustments in the final specifications that establish those quotas. The proposed action would thus improve management by NMFS and state marine fisheries agencies by establishing final quota allocation before the beginning of the fishing year that would not be further adjusted in the middle of the fishing year. This would enable fishermen targeting these species to plan their activities for the upcoming fishing year with greater confidence.

This proposed rule would also remove the regulatory language found at §§ 648.100 (d), 648.120 (c), and 648.140 (c) that specifies publication dates for proposed annual summer flounder, scup, and black sea bass fishing measures. The current publication dates of October 15 for proposed annual fishing measures and of February 15 for proposed recreational measures specified in the regulations are misleading because there is no corresponding deadline for submission of annual specifications and corresponding analyses to NMFS, or publication of final measures. The removal of the publication dates would provide NMFS with the time necessary to ensure that all proposed alternatives are appropriately analyzed.

The cut-off date proposed for compiling landings data that would be used in adjusting the quota allocations for the next fishing year is October 31. However, landings data for the full fishing year 2000 have already been used to calculate overages and make necessary adjustments in 2001. Therefore, this measure would be phased in for the 2002 fishery in that only landings from January through October 2001 would be used to determine 2001 overages for purposes of the 2002 quotas. For the 2003 fishery and subsequent years, implementation would occur as described below.

NMFS considered four alternative cut-off dates in developing the proposed measure. These cut-off dates consisted of September 30, October 31, November 30, and the status-quo or no cut-off date. A public hearing was conducted during the October 11, 2001, meeting of the Mid-Atlantic Fishery Management Council (Council) in New Bern, NC. At that meeting, NMFS announced that its preferred cut-off date was October 31. No comments were received that resulted in a modification of the preferred cut-off date.

Summer Flounder

The commercial summer flounder quota is allocated on a state-by-state basis to the states from Maine through North Carolina. The proposed cut-off date of October 31 would provide sufficient time to compile commercial summer flounder landings data through October 31 and to make necessary quota adjustments to be published in the rule establishing the final specifications for the upcoming year. In addition, this cut-off date would insure that the majority of summer flounder landings data (approximately 80 percent, based on the availability of 2000 summer flounder landings date) are included in the calculation of state-by-state quota overages.

For example, during November 2002, all available 2002 landings data for the period January 1 through October 31 would be compiled and compared to proposed 2002 state quota allocations. Any overages would then be determined, and required deductions would be made from the state allocations for 2003 in the final rule that establishes the 2003 measures (to be published in December 2002). In addition, 2001 landings data for the period January 1 through December 31 would be reviewed and compared to 2001 state quota allocations. This would be the first consideration of landings data for the period November through December 2001. It would be the second consideration of landings from the period January through October 2001; these data would be reviewed to identify any data that were submitted late. Any new overages identified for the 2001 fishing year as the result of this examination would also be deducted from state allocations for 2003 in the final rule that establishes the 2003 measures.

If NMFS determines that a state's quota allocation has been exceeded as of October 31, then that state's commercial summer flounder fishery would be closed in accordance with the regulations fount at § 648.101(c). Any additional overages that may occur

during November and December as a result of state waters remaining open would be deducted from the quota allocation for that state in the following fishing year.

Scup

The commercial scup quota is allocated coastwide from Maine through North Carolina, to three seasonal allocation periods: Winter I, January through April; Summer, May through October; and Winter II, November through December. The proposed action would establish a landings cut-off date of October 31 for the Winter I and Summer quota periods, and establish a second landings cut-off date of June 30 of the following year for the Winter II quota period. A landings cut-off date of October 31 would provide sufficient time to compile commercial scup landings for the Winter I and Summer quota periods and to make necessary adjustments to the quota allocations for these quota periods in the final specifications for the upcoming year. In addition, the proposed cut-off date is consistent with the end of the Summer quota period. Based on the availability of 2000 scup landings data for the Winter I and Summer quota periods, most (up to 95 percent) of the landings occurring during these quota periods would be available for inclusion in the calculation of quota overages for the final specifications if a cut-off date of October 31 was established. The establishment of a second landings cut-off date of June 30 for the scup fishery is proposed because all scup landings for the Winter II fishery are generally accounted for before that date, based on the availability of commercial scup landings for the 2000 Winter II quota period.

For example, during November 2002, all available 2002 landings data for the period January 1 through October 31 would be compiled and compared to the 2002 Winter I and Summer quota allocations. Any overages would then be determined, and required deductions would be made from the Winter I and/or Summer allocations for 2003 in the final rule that establishes the 2003 measures. In addition, all available 2001 landings data for the period January 1 through December 31 would be compiled and compared to the 2001 period allocations (Winter I, Summer, and Winter II). Any new overages identified for the 2001 fishing year as the result of late data would be determined, and the required deductions would be made from the appropriate period allocations for 2003 in the final rule that establishes the 2003 measures.

By June 30, 2003, all available 2002 landings data for the Winter II period (November through December) would be compiled and compared to the 2002 Winter II quota allocation. Any overages would be determined, and the required deductions would be made from the Winter II allocation for 2003. The public would then be informed of this adjustment in a **Federal Register** notification published in July 2003.

Black Sea Bass

The black sea bass quota is allocated coastwide, from Maine to North Carolina, to quarterly allocations: Quarter 1, January through March; Quarter 2, April through June; Quarter 3, July through September; and Quarter 4, October through December. The proposed action would establish a landings cut-off date of October 31 for the Quarter 1 through Quarter 3 fisheries, and establish a second landings cut-off date of June 30 of the following year for the Quarter 4 fishery. Similar to scup, a landings cut-off date of October 31 would provide sufficient time to compile commercial black sea bass landings and make necessary adjustments to the quota allocations for the Quarter 1 through Quarter 3 fisheries in the final specifications for the upcoming year. Based on the availability of 2000 black sea bass landings for this period, at least 90 percent of landings occurring during these quota periods would be available for inclusion in the calculation of quota overages for the final specifications if a cut-off date of October 31 was established. In addition, NMFS is recommending that landings for the Quarter 4 black sea bass fishery be assessed as of June 30 of the following year because the prior year's landings data for this quota period are relatively complete by that date.

For example, during November 2002, all available 2002 landings data for Quarters 1 through 3 that are received by October 31 would be compiled and compared to the 2002 quota allocations for Quarters 1 through 3. Any overages would then be determined, and required deductions would be made from the Quarter 1, 2 or 3 allocations for 2003 in the final rule that establishes the 2003 measures. In addition, all available 2001 landings data (Quarters 1 through 4) would be reviewed to identify any data reported late. Any new overages identified for the 2001 fishing year as the result of this review would also be deducted from the appropriate quarterly allocations for 2003.

By June 30, 2003, all available 2002 landings data for Quarter 4 would be compiled and compared to the 2002 quota allocation for Quarter 4. Any overage would be determined, and required deductions would be made from the Quarter 4 allocation for 2003. The public would then be informed of this adjustment in a **Federal Register** notification published in July 2003.

Classification

This proposed rule has been determined to be not significant for purposes of Executive Order 12866.

This proposed rule does not contain certain policies with Federalism implications as that term is defined in Executive Order 13132.

The Chief Counsel for Regulation of the Department of Commerce certified to the Chief Counsel for Advocacy of the Small Business Administration that this proposed rule, if adopted, would not have a significant economic impact on a substantial number of small entities.

The proposed measures contained in this regulatory amendment could affect any vessel holding an active Federal moratorium permit for summer flounder, scup, or black sea bass, as well as vessels that fish for any one of these species in state waters. Data from the Northeast permit application database show that, as of September 25, 2001, there were 1,396 commercial vessels permitted to take part in the commercial summer flounder, scup, and/or black sea bass fisheries. All of these vessels are considered to be small entities. However, the establishment of a landings cut-off date would not directly modify fishing activities associated with the summer flounder, scup, and black sea bass fisheries. As a result, this action is not expected to have any economic impact on vessels participating in the commercial summer flounder, scup, and black sea bass fisheries. Thus, the revenues and profitability of individual vessels will not be adversely affected by this action. However, the action will allow vessel owners to know the exact quotas for the upcoming fishing year and may enable them to make adjustments to their fishing operations that could potentially increase their profitability by providing vessel owners more certainty in planning for the upcoming fishing year. With exact knowledge of the quotas, they can better plan when to fish based on ex-vessel prices; costs of fuel and food; and arrangements with brokers, dealers, and wharf facilities. As a result, an initial regulatory flexibility analysis was not prepared.

List of Subjects in 50 CFR Part 648

Fisheries, Fishing, Reporting and recordkeeping requirements

Dated: December 7, 2001.

William T. Hogarth,

Assistant Administrator for Fisheries, National Marine Fisheries Service.

For the reasons set out in the preamble, 50 CFR part 648 is proposed to be amended as follows:

PART 648—FISHERIES OF THE NORTHEASTERN UNITED STATES

1. The authority citation for part 648 continues to read as follows:

Authority: 16 U.S.C. 1801 *et seq.*

2. In § 648.100, the first sentence of paragraph (d) introductory text, and paragraph (d)(1)(ii) are revised to read as follows:

§ 648.100 Catch quotas and other restrictions.

* * * * *

(d) After such review, the Regional Administrator will publish a proposed rule in the **Federal Register** to implement a coastwide commercial quota, a recreational harvest limit, and additional management measures for the commercial fishery. * * *

(1) * * *

(ii) All summer flounder landed for sale in a state shall be applied against that state's annual commercial quota, regardless of where the summer flounder were harvested. Any landings in excess of the commercial quota in any state will be deducted from that state's annual quota for the following year in the final rule that establishes the annual state-by-state quotas. The overage deduction will be based on landings for the current year through October 31, and on landings for the previous calendar year that were not included when the overage deduction was made in the final rule that established the annual quota for the current year. If the Regional Administrator determines during the fishing year that any part of an overage deduction was based on erroneous landings data that were in excess of actual landings for the period concerned, NMFS will restore all or part of the overage deducted to the appropriate quota allocation. The Regional Administrator will publish a notification in the **Federal Register** announcing such restoration.

* * * * *

3. In § 648.120, paragraphs (d)(4), (d)(5), and (d)(6) are removed, paragraph (c) is revised and paragraph (d)(3) is added to read as follows:

§ 648.120 Catch quotas and other restrictions.

* * * * *

(c) Annual fishing measures. The Demersal Species Committee shall review the recommendations of the Scup Monitoring Committee. Based on these recommendations and any public comment, the Demersal Species Committee shall recommend to the MAFMC measures necessary to assure that the specified exploitation rate will not be exceeded. The MAFMC's recommendation must include supporting documentation, as appropriate, concerning the environmental and economic impacts of the recommendations. The Regional Administrator shall review these recommendations and any recommendations of the Commission. After such review, NMFS will publish a proposed rule to implement a commercial quota in the **Federal Register**, specifying the amount of quota allocated to each of the three periods, landings limits for the Winter I and Winter II periods, the percentage of landings attained during the Winter I fishery at which the landing limits will be reduced, a recreational harvest limit, and additional management measures for the commercial fishery. If the Regional Administrator determines that additional recreational measures are necessary to assure that the specified exploitation rate will not be exceeded, he or she will publish a proposed rule in the **Federal Register** to implement additional management measures for the recreational fishery. After considering public comment, the Regional Administrator will publish a final rule in the Federal Register to implement annual measures.

(d) * * *

(3) All scup landed for sale in any state during a quota period shall be applied against the coastwide commercial quota for that period, regardless of where the scup were harvested. Any current year landings in excess of the commercial quota in any quota period will be deducted from that quota period's annual quota in the following year as prescribed below:

(i) For the Winter I and Summer quota periods, landings in excess of the allocation will be deducted from the appropriate quota period for the following year in the final rule that establishes the annual quota. The overage deduction will be based on landings for the current year through October 31, and on landings for the previous calendar year that were not included when the overage deduction was made in the final rule that established the period quotas for the current year. If the Regional Administrator determines during the fishing year that any part of an overage deduction was based on erroneous landings data that were in excess of actual landings for the period concerned, NMFS will restore all or part of the overage deduction to the appropriate quota allocation. The Regional Administrator will publish notification in the **Federal Register** announcing the restoration.

(ii) For the Winter II quota period, landings in excess of the allocation will be deducted from the Winter II period for the following year in a notification published in the Federal Register during the following year. The overage deduction will be based on landings information available for the Winter II period as of June 30. If the Regional Administrator determines during the fishing year that any part of an overage deduction was based on erroneous landings data that were in excess of actual landings for the period concerned, NMFS will restore all or part of the overage deduction to the appropriate quota allocation. The Regional Administrator will publish notification in the **Federal Register** announcing the restoration.

* * * * *

4. In § 648.140, paragraphs (c) and (d)(2) are revised and paragraphs (d)(3) and (d)(4) are added to read as follows:

§ 648.140 Catch quotas and other restrictions.

* * * * *

(c) Annual fishing measures. The Demersal Species Committee shall review the recommendations of the Black Sea Bass Monitoring Committee. Based on these recommendations and any public comment, the Demersal Species Committee shall make its recommendations to the Council with respect to the measures necessary to assure that the target exploitation rate specified in paragraph (a) of this section is not exceeded. The Council shall review these recommendations and, based on the recommendations and public comment, make recommendations to the Regional Administrator with respect to the measures necessary to assure that the target exploitation rate specified in paragraph (a) of this section is not exceeded. Included in the recommendation will be supporting documents, as appropriate, concerning the environmental and economic impacts of the proposed action. The Regional Administrator will review these recommendations and any recommendations of the Commission. After such review, the Regional Administrator will publish a proposed rule in the **Federal Register** to implement a commercial quota, a

recreational harvest limit, and additional management measures for the commercial fishery. If the Regional Administrator determines that additional recreational measures are necessary to assure that the target exploitation rate specified in paragraph (a) of this section will not be exceeded, he or she will publish a proposed rule in the **Federal Register** to implement additional management measures for the recreational fishery. After considering public comment, the Regional Administrator will publish a final rule in the Federal Register to implement the measures necessary to assure that the target exploitation rate specified in paragraph (a) of this section is not exceeded.

(d) * * *

(2) All black sea bass landed for sale in the states from North Carolina through Maine by a vessel with a moratorium permit issued under § 648.4 (a)(7) shall be applied against that quarter's commercial quota, regardless of where the black sea bass were harvested. All black sea bass harvested north of 35°15.3′ N. lat., and landed for sale in the states from North Carolina through Maine by any vessel without a moratorium permit and fishing exclusively in state waters will be counted against the quota by the state in which it is landed pursuant to the Fishery Management Plan for the Black Sea Bass Fishery adopted by the Commission. The Regional Administrator will determine the date on which the quarterly quota will have been harvested; the EEZ north of 35°15.3′ N. lat. will be closed on that date. The Regional Administrator will publish a notice in the **Federal Register** advising that, upon, and after, that date, no vessel may possess black sea bass in the EEZ north of 35°15.3′ N. lat. during a closure, nor may vessels issued a moratorium permit land black sea bass during the closure. Individual states will have the responsibility to close their ports to landings of black sea bass during a closure pursuant to the Fishery Management Plan for the Black Sea Bass Fishery adopted by the Commission.

(3) For the Quarter 1 through Quarter 3 quota periods, landings in excess of the allocation will be deducted from the appropriate quota period for the following year in the final rule that establishes the annual quota. The overage deduction will be based on landings for the current year through September 30, and landings for the previous calendar year that were not included when the overage deduction was made in the final rule that established the quarterly quotas for the current year. If the Regional Administrator determines during the fishing year that any part of an overage deduction was based on erroneous landings data that were in excess of actual landings for the period concerned, NMFS will restore all or part of the overage deduction to the appropriate quota allocation. The Regional Administrator will publish a notification in the **Federal Register** announcing the restoration.

(4) For the Quarter 4 quota period, landings in excess of the allocation will be deducted from the Quarter 4 period for the following year in a notification published in the **Federal Register** during the following year. The overage deduction will be based on landings information available for the Quarter 4 period as of June 30 of the following year. If the Regional Administrator determines during the fishing year that any part of an overage deduction was based on erroneous landings data that were in excess of actual landings for the period concerned, NMFS will restore all or part of the overage deduction to the appropriate quota allocation. The Regional Administrator will publish a notification in the **Federal Register** announcing the restoration.

* * * * *

[FR Doc. 01–30828 Filed 12–12–01; 8:45 am]

BILLING CODE 3510–22–S

Notices

Federal Register

Vol. 66, No. 240

Thursday, December 13, 2001

This section of the FEDERAL REGISTER contains documents other than rules or proposed rules that are applicable to the public. Notices of hearings and investigations, committee meetings, agency decisions and rulings, delegations of authority, filing of petitions and applications and agency statements of organization and functions are examples of documents appearing in this section.

DEPARTMENT OF AGRICULTURE

Forest Service

Eastern Washington Cascades Provincial Advisory committee and Yakima Provincial Advisory Committee

AGENCY: Forest Service, USDA.

ACTION: Notice of meeting.

SUMMARY: The Eastern Washington Cascades Provincial Advisory Committee and the Yakima Provincial Advisory Committee will meet on Thursday, January 17, 2002, at the Wenatchee National Forest headquarters main conference room, 215 Melody lane, Wenatchee, Washington, The meeting will begin at 9 a.m. and continue until 3 p.m. During this meeting we will learn about long-term restoration projects and noxious weeds. All Eastern Washington Cascades and Yakima Province Advisory Committee meetings are open to the public. Interested citizens are welcome to attend.

FOR FURTHER INFORMATION CONTACT: Direct questions regarding this meeting to Paul Hart, Designated Federal Official, USDA, Wenatchee National Forest, 215 Melody Lane, Wenatchee, Washington 98801, 509–662–4335.

Dated: December 6, 2001.

Paul Hart,

Designated Federal Official, Okanogan and Wenatchee National Forests.

[FR Doc. 01–30790 Filed 12–12–01; 8:45 am]

BILLING CODE 3410–11–M

COMMISSION ON CIVIL RIGHTS

Hearing on Environmental Justice

AGENCY: Commission on Civil Rights.

ACTION: Notice of hearings.

SUMMARY: Notice is hereby given pursuant to the provisions of the Civil Rights Commission Amendments Act of 1994, section3, Public Law 103–419, 108 Stat. 4338, as amended, and 45 CFR 702.3., that a public hearing before the U.S. Commission on Civil Rights will take place on Friday, January 11, 2002, beginning at approximately 10 a.m., immediately following previously scheduled Commission business taking place earlier that morning. The purpose of this hearing is to collect information within the jurisdiction of the Commission, under Public Law 98–183, section 5(a)(1) and Section 5 (a)(5), related particularly to the effect of environmental hazards, including hazardous waste sites and industries located in, or near, low-income communities and communities of color, and the question of whether the civil rights of those communities in question are being violated.

The Commission are authorized to hold hearings and to issue subpoenas for the production of documents and the attendance of witnesses pursuant to 45 CFR 701.2. The Commission in an independent bipartisan, fact finding agency authorized to study, collect, and disseminate information, and to appraise the laws and policies of the Federal Government, and to study and collect information with respect to discrimination or denials of equal protection of the laws under the Constitution because of race, color, religion, sex, age, disability, or national original, or in the administration of justice. Hearing impaired persons who will attend the hearings and require the services of a sign language interpreter, should contact Pamela Dunston, Administration's Services and Clearinghouse Division at (202) 376–8105 (TDD (202) 376–8116), at least five (5) working days before the scheduled date of the hearing.

FOR FURTHER INFORMATION CONTACT: Les Jin, Office of the Staff Director (202) 376–7700.

Dated: December 7, 2002.

Les Jin,

Staff Director.

[FR Doc. 01–30764 Filed 12–12–01; 8:45 am]

BILLING CODE 6335–1–M

DEPARTMENT OF COMMERCE

[I.D. 121001A]

Submission for OMB Review; Comment Request

The Department of Commerce has submitted to the Office of Management and Budget (OMB) for emergency clearance the following proposal for collection of information under the provisions of the Paperwork Reduction Act (44 U.S.C. Chapter 35).

Agency: National Oceanic and Atmospheric Administration (NOAA).

Title: NMFS Alaska Region Vessel Monitoring System (VMS) Program.

Form Number(s): None.

OMB Approval Number: None.

Type of Request: Emergency.

Burden Hours: 13,044.

Number of Respondents: 539.

Average Hours Per Response: 6 hours for installation of a VMS unit, 4 hours per year to maintain a VMS unit, 5 seconds for an automated position report, and 12 minutes to fax a check-in report.

Needs and Uses: As required in the reasonable and prudent measures in the Endangered Species Act, Section 7 biological opinion on the effects of the BSAI and GOA pollock, Atka mackerel, and Pacific cod fisheries on the endangered Steller sea lions, the National Marine Fisheries Service (NMFS) must implement changes to information collected from fishery participants. These new registrations will be in effect on January 1, 2002 and will end for Atka mackerel on January 15, 2002. In order to participate in the three fisheries, these registered participants must install vessel monitoring system (VMS) units on their vessels and operate the VMS while directed fishing for each of the species. Some of these applicants have already acquired VMS units for use in the Atka mackerel and pollock fisheries. This emergency collection of information extends the requirement for use of VMS units to all vessels that are directed fishing for Pacific cod, pollock, and Atka mackerel in the exclusive economic zone off Alaska.

Affected Public: Business and other for-profit organizations.

Frequency: Every 20 minutes for a position report, on occasion for a check-in report.

Respondent's Obligation: Mandatory.

OMB Desk Officer: David Rostker, (202) 395–3897.

Copies of the above information collection proposal can be obtained by calling or writing Madeleine Clayton, Departmental Paperwork Clearance Officer, (202) 482–3129, Department of Commerce, Room 6086, 14th and Constitution Avenue, NW, Washington, DC 20230 (or via the Internet at MClayton@doc.gov).

Written comments and recommendations for the proposed information collection should be sent within 30 days of publication of this notice to David Rostker, OMB Desk Officer, Room 10202, New Executive Office Building, Washington, DC 20503.

Dated: December 6, 2001.

Madeleine Clayton,

Departmental Paperwork Clearance Officer, Office of the Chief Information Officer.

[FR Doc. 01–30826 Filed 12–12–01; 8:45 am]

BILLING CODE 3510–22–S

DEPARTMENT OF COMMERCE

International Trade Administration

[C–489–806]

Certain Pasta From Turkey: Final Results of Countervailing Duty Administrative Review

AGENCY: Import Administration, International Trade Administration, Department of Commerce.

ACTION: Notice of final results of countervailing duty administrative review.

SUMMARY: The Department is issuing the final results of the first administrative review of the countervailing duty order on pasta from Turkey.

EFFECTIVE DATE: December 13, 2001.

FURTHER INFORMATION CONTACT: Annika O'Hara or Melanie Brown, Office of AD/CVD Enforcement 1, Import Administration, U.S. Department of Commerce, Room 3099, 14th Street and Constitution Avenue, NW., Washington, DC 20230; telephone: (202) 482–3798 and (202) 482–4987, respectively.

SUPPLEMENTARY INFORMATION:

Applicable Statute and Regulations

Unless otherwise indicated, all citations to the Tariff Act of 1930, as amended (''the Act''), are references to the provisions effective January 1, 1995, the effective date of the amendments made to the Act by the Uruguay Round Agreements Act (''URAA''). In addition, unless otherwise indicated, all citations to the Department of Commerce's (''the Department'') regulations are to 19 CFR part 351 (April 2000).

Background

On July 24, 1996, the Department published in the **Federal Register** (61 FR 38546) the countervailing duty order on certain pasta from Turkey.

In accordance with 19 CFR 351.213(b), this review of the order covers the following producers or exporters of the subject merchandise for which a review was specifically requested: Filiz Gida Sanayi ve Ticaret A.S. (''Filiz''), Beslen Makarna Gida Sanayi ve Ticaret A.S. and Beslen Pazarlama Gida Sanayi ve Ticaret A.S. (''Beslen''), Pastavilla Makarnacilik Sanayi ve Ticaret A.S. (''Pastavilla''), and Maktas Makarnacilik ve Ticaret A.S. (''Maktas'').

Since the publication of the preliminary results (*see Certain Pasta from Turkey: Preliminary Results of Countervailing Duty Administrative Review,* 66 FR 41553 (August 8, 2001)), the following events have occurred: On October 11, 2001, the Department issued a third supplemental questionnaire to Pastavilla, Maktas, and the Government of Turkey. Responses were received between October 19 and October 23, 2001. On October 31, 2001, Maktas submitted a case brief. No rebuttal briefs were submitted and we received no requests for a hearing.

Scope of Order

Covered by the order are shipments of certain non-egg dry pasta in packages of five pounds (2.27 kilograms) or less, whether or not enriched or fortified or containing milk or other optional ingredients such as chopped vegetables, vegetable purees, milk, gluten, diastases, vitamins, coloring and flavorings, and up to two percent egg white. The pasta covered by this order is typically sold in the retail market, in fiberboard or cardboard cartons or polyethylene or polypropylene bags, of varying dimensions.

Excluded from the order are refrigerated, frozen, or canned pastas, as well as all forms of egg pasta, with the exception of non-egg dry pasta containing up to two percent egg white.

The merchandise under review is currently classifiable under subheading 1902.19.20 of the *Harmonized Tariff Schedule of the United States* (''HTSUS''). Although the HTSUS subheading is provided for convenience and customs purposes, our written description of the scope of the order is dispositive.

Scope Ruling

To date, the Department has issued the following scope ruling:

On October 26, 1998, the Department self-initiated a scope inquiry to determine whether a package weighing over five pounds as a result of allowable industry tolerances may be within the scope of the countervailing duty order. On May 24, 1999, we issued a final scope ruling finding that, effective October 26, 1998, pasta in packages weighing or labeled up to (and including) five pounds four ounces is within the scope of the countervailing duty order. (See May 24, 1999 memorandum from John Brinkman to Richard Moreland, which is on file in the Central Records Unit (''CRU'') in Room B–099 of the main Commerce building.)

Period of Review

The period of review (''POR'') for which we are measuring subsidies is from January 1, 1999 through December 31, 1999.

Analysis of Comments Received

All issues raised in the case by parties to this administrative review are addressed in the December 6, 2001 *Issues and Decision Memorandum* from Richard Moreland, Deputy Assistant Secretary for Import Administration, to Bernard Carreau, Acting Assistant Secretary for Import Administration (''*Decision Memorandum*''), which is hereby adopted by this notice. Only one interested party, Maktas, filed a case brief. No parties filed rebuttal briefs. The only issue raised by Maktas concerned the calculation of the benefit conferred by the Resource Utilization Support Fund (''KKDF'') tax exemption program. Parties can find a complete discussion of this issue and the corresponding recommendation in the public *Decision Memorandum* which is on file in the CRU. In addition, a complete version of the memorandum can be accessed directly on the Internet at *http://ia.ita.doc.gov/frn/* under the heading ''Turkey.'' The paper copy and electronic version of the *Decision Memorandum* are identical in content.

Changes Since the Preliminary Results

In the preliminary results, we found a program called ''Exemption from KKDF, BIST, and Stamp Taxes on Export-related Loans'' to provide countervailable benefits. In addition to being countervailed as a separate tax program under this heading, the benefit from these tax exemptions was added to the benefit conveyed by preferential interest rates on pre-shipment export loans in order to capture the total

benefit from these loans. Based upon the comment received and further review of the questionnaire responses, we have made three changes related to this program since the preliminary results: (1) We have found the exemption from stamp taxes to be not countervailable; (2) we have analyzed the KKDF and the BIST (Banking and Insurance Transactions) tax exemptions as two separate programs; and (3) we have changed the benefit calculation methodology for the KKDF and BIST tax exemptions on certain loans. These changes are discussed in further detail in the relevant sections of the *Decision Memorandum.*

Final Results of Review

In accordance with 19 CFR 351.221(b)(4)(i), we calculated an individual subsidy rate for each producer/exporter subject to this administrative review. For the period January 1, 1999 through December 31, 1999, we determine the net subsidy rates for producers/exporters under review to be those specified in the chart shown below.

Company	Ad valorem rate (percent)
Beslen Makarna Gida Sanayi ve Ticaret A.S. and Beslen Pazarlama Gida Sanayi ve Ticaret A.S.	0.00
Filiz Gida Sanayi ve Ticaret A.S.	0.00
Maktas Makarnacilik ve Ticaret A.S.	6.52
Pastavilla Makarnacilik Sanayi ve Ticaret A.S.	1.73

We will instruct the Customs Service (''Customs'') to assess countervailing duties as indicated above. The Department will also instruct Customs to collect cash deposits of estimated countervailing duties in the percentages detailed above of the f.o.b. invoice prices on all shipments of the subject merchandise from the producers/exporters under review, entered, or withdrawn from warehouse, for consumption on or after the date of publication of the final results of this administrative review.

The cash deposit rates for all companies not covered by this review are not changed by the results of this review. Thus, we will instruct Customs to continue to collect cash deposits for non-reviewed companies. Accordingly, the cash deposit rates that will be applied to non-reviewed companies covered by this order are those established in the *Notice of Countervailing Duty Order: Certain Pasta (''Pasta'') from Turkey,* 61 FR 38546 (July 24, 1996), which provides the most recently published countervailing duty rates for companies not reviewed in this administrative review. These rates shall apply to all non-reviewed companies until a review of a company assigned these rates is completed. In addition, for the period January 1, 1999 through December 31, 1999, the assessment rates applicable to all non-reviewed companies covered by these orders are the cash deposit rates in effect at the time of entry.

Return or Destruction of Proprietary Information

This notice serves as a reminder to parties subject to administrative protective order (''APO'') of their responsibility concerning the disposition of proprietary information disclosed under APO in accordance with 19 CFR 351.305(a)(3). Timely written notification of return or destruction of APO materials or conversion to judicial protective order is hereby requested. Failure to comply with the regulations and the terms of an APO is a sanctionable violation.

This administrative review and notice are in accordance with section 751(a)(1) of the Act (19 U.S.C. 1675(a)(1)).

Dated: December 6, 2001.

Bernard Carreau,

Acting Assistant Secretary for Import Administration.

[FR Doc. 01–30823 Filed 12–12–01; 8:45 am]

BILLING CODE 3510–DS–P

DEPARTMENT OF COMMERCE

International Trade Administration

[Docket No. 011123281–1281–01]

Special American Business Internship Training Program (SABIT) Grants Funding Availability

AGENCY: International Trade Administration, U.S. Department of Commerce.

ACTION: Notice.

SUMMARY: This Notice announces availability of funds for the Special American Business Internship Training Program (SABIT), for training business executives and scientists (also referred to as ''interns'') from the New Independent States (NIS).

DATES: This notice is effective as of December 17, 2001. The closing date for applications is March 1, 2002. If available funds are depleted prior to the closing date, a notice to that effect will be published in the **Federal Register**. Processing of complete applications takes approximately three to four months. All awards are expected to be made by July 1, 2002.

ADDRESSES: Request for Applications: Competitive Application kits will be available from ITA starting on the day this notice is published. To obtain a copy of the Application Kit please contact SABIT by: (1) E-mail at *SABITApply@ita.doc.gov,* providing your name, company name and address; (2) Telephone (202) 482–0073; (3) The world wide web at *www.mac.doc.gov/sabit/sabit.html;* (4) Facsimile (202) 482–2443; (5) Mail: Send a written request with two self-addressed mailing labels to Application Request, The SABIT Program, U.S. Department of Commerce, [FCB]—Fourth Floor—4100W, 1401 Constitution Avenue, NW., Washington, DC, 20230. The telephone numbers are not toll free numbers. Only one copy of the Application Kit will be provided to each organization requesting it, but it may be reproduced by the requesters.

FOR FURTHER INFORMATION CONTACT: Liesel C. Duhon, Director, SABIT Program, U.S. Department of Commerce, phone—(202) 482–0073, facsimile—(202) 482–2443. These are not toll free numbers.

SUPPLEMENTARY INFORMATION:

Authority: 22 U.S.C. 2395 (b).

Catalog of Federal Domestic Assistance (CFDA): 11.114—Special American Business Internship Training Program.

Program Description

The Department of Commerce, International Trade Administration (ITA) established the SABIT program in September 1990 to assist the former Soviet Union's transition to a market economy. Since that time, SABIT has been supporting U.S. companies that wish to provide business executives and scientists from the NIS three-to six-month programs of hands-on training in a U.S. market economy.

Under the SABIT program, qualified U.S. firms will receive funds through a cooperative agreement with ITA to help defray the cost of hosting interns. The training must take place in the United States. ITA will interview NIS managers or scientists nominated by participating U.S. companies, or assist in identifying eligible candidates. Interns may be from any of the following Independent States: Armenia, Azerbaijan, Belarus, Georgia, Kazakhstan, Kyrgyzstan, Moldova, Russia, Tajikistan, Turkmenistan, Ukraine, and Uzbekistan. However, specific restrictions may apply. The U.S. firms will be expected to provide the interns with a hands-on, non-academic,

executive training program designed to maximize their exposure to management or commercially-oriented scientific operations. At the end of the training program, interns must return to the NIS. If there is any evidence of a conflict of interest between an intern and the company, the intern is disqualified.

SABIT exposes NIS business managers and scientists to a completely new way of thinking in which demand, consumer satisfaction, and profits drive production. Senior-level interns visiting the U.S. for internship programs with public or private sector companies will be exposed to an environment which will provide them with practical knowledge for transforming their countries' enterprises and economies to the free market. The program provides first-hand, eye-opening experience to managers and scientists which cannot be duplicated by American managers traveling to their territories.

Managers: SABIT assists economic restructuring in the NIS by providing top-level business managers with practical training in American methods of innovation and management in such areas as strategic planning, financing, production, distribution, marketing, accounting, wholesaling, and/or labor relations. This first-hand experience in the U.S. economy enables interns to become leaders in establishing and operating a market economy in the NIS, and creates a unique opportunity for U.S. firms to familiarize key executives from the NIS with their products and services. Sponsoring U.S. firms will benefit by establishing relationships with key managers in similar industries who are uniquely positioned to assist their U.S. sponsors do business in the Independent States.

Scientists: SABIT provides opportunities for gifted scientists to apply their skills to peaceful research and development in the civilian sector, in areas such as defense conversion, medical research, and the environment, and exposes them to the role of scientific research in a market economy where applicability of research relates to business success. Sponsoring firms in the U.S. scientific community also benefit from exchanging information and ideas, and different approaches to new technologies.

All internships are three to six months; however, ITA reserves the right to allow an intern to stay for a shorter period of time (no less than one month) if the U.S. company agrees and the intern demonstrates a need for a shorter internship based on his or her management responsibilities. ITA will reimburse companies for the round trip international travel (coach class tickets) of each intern from the intern's home city in the NIS to the U.S. internship site, upon submission of the paid travel invoice, payment receipt, or other evidence of payment and the form SF–270, ''Request for Advance or Reimbursement.'' Travel under the program is subject to the Fly America Act. Recipient firms provide directly to interns a stipend of $34 a day. Recipient firms will be reimbursed for this stipend, up to a maximum of six months, upon the submission of an end-of-internship report and Standard Form SF–270, Request for Advance and/or Reimbursement. Interns must return to their home countries immediately upon completion of their U.S. internships. Recipient firms will provide housing for the interns and will be reimbursed for up to $500 per month for housing costs (not including utilities or telephone service charges), upon the submission of the end-of-internship report and Standard Form SF–270. For cities with higher costs of living, up to $750.00 may be reimbursed. In either case, sufficient proof of the actual cost of similar housing in the local area must be provided. In general, each award will have a cap of $13,700 per intern for total cost of airline travel, stipend and housing costs. ITA reserves the right to allow an award to exceed this cap in cases of unusually high costs, specifically airfare from remote regions of the NIS such as Central Asia and the Caucasus. However, the total reimbursement cannot exceed the award amount. There are no specific matching requirements for the awards. Recipient firms, however, are expected to bear the costs beyond those covered by the award, including: visa fees, insurance, any food and incidentals costs beyond the $34 per day stipend, training manuals, additional lodging costs beyond the reimbursed amount, any training-related travel within the U.S., and provision of the hands-on training for the interns.

U.S. firms wishing to utilize SABIT in order to be matched with an intern without applying for financial assistance may do so. Such firms will be responsible for all costs, including travel expenses, related to sponsoring the intern. However, prior to acceptance as a SABIT intern, work plans and candidates must be approved by the SABIT Program. Furthermore, program training will be monitored by SABIT staff and evaluated upon completion of training.

ITA does not guarantee that it will match Applicants with the profile provided to SABIT.

Funding Availability

Pursuant to section 632(a) of the Foreign Assistance Act of 1961, as amended (the ''Act'') funding for the program will be provided by the United States Agency for International Development (A.I.D). ITA will award financial assistance and administer the program pursuant to the authority contained in section 635(b) of the Act and other applicable grant rules. The estimated amount of financial assistance available for the program is $1,500,000. Additional funding may become available at a future date.

Matching Requirements

There are no specific matching requirements.

Funding Instrument

Federal assistance will be awarded pursuant to a cooperative agreement between DOC and the recipient firm.

Eligibility Criteria

Eligible applicants for the SABIT program will include all for profit or non-profit U.S. corporations, associations, organizations or other public or private entities located in the United States. Agencies or divisions of the federal government are not eligible. However, state and local governments are eligible.

Award Period

Funds will be available effective with the publication of this notice. The funds will remain available until they are expended. Recipient firms will have one year from the date listed on the Financial Assistance Award, CD–450, in order to use the funds. However, DOC reserves the right to allow an extension if the recipient can justify the need for extra time. If applicants incur any costs prior to an award being made, they do solely at their own risk of not being reimbursed by the Government. Notwithstanding any verbal or written assurance that may have been received, there is no obligation on the part of DOC to cover pre-award costs.

Evaluation Criteria

Consideration for financial assistance will be given to those SABIT proposals which:

(1) Present a realistic work plan describing in detail the training program to be provided to the SABIT intern(s). Work plans must include the proposed internship training activities. The components of the training activities must be described in as much detail as possible, preferably on a week-by-week basis. The description of the training activities should include an account of

what the intern's(s') duties and responsibilities will be during the training. Please note, if you are coordinating an internship which will take place at several companies, you must provide a workplan for each company.

(2) Demonstrate a commitment to the intent and goals of the program to provide practical, on-the-job, non-academic, non-classroom, training: in the case of manager interns, an appropriate management training experience, or, in the case of scientist interns, a practical, commercially-oriented scientific training experience. Include a brief objectives section indicating why the Applicant wishes to provide an internship to a manager(s) or scientist(s) from the NIS, and how the proposed internship would further the purpose of the SABIT program as described above. Also, the Applicant should note how the internship to be provided will respond to the priority needs of senior business managers and scientists in the NIS.

(3) Provide fully the following information: (a) Whether Applicant is applying to host managers or scientists, or both (and the number of each); (b) Whether potential intern candidate(s) is(are) employed in priority industries, and which one(s); (c) The duration of the internship; (d) The location(s) of the internship; (e) The name, address, and telephone number of the application's preparer and the name, address, and telephone number of the designated internship coordinator; (f) Name(s) of division(s) in which the intern(s) will be placed; (g) The individual(s) in the U.S. company under whose supervision the intern will train; (h) The anticipated housing arrangements to be provided for the intern(s). Note that housing arrangements should be suitable for mid- and senior-level professionals, and that each intern must be provided with a private room; (i) A statement that the host firm is solidly committed to interns' return to their own countries upon completion of the internships.

(4) Provide a general description of the profile of the intern(s) the Applicant would like to host, including: educational background; occupational/professional background (including number of years and areas of experience); size and nature of organization at which the intern(s) is/are presently employed; preference for the region of the NIS where the intern(s) is/are employed; and whether Applicant is open to sponsoring interns from a variety of NIS countries. If the U.S. company is nominating an intern candidate, please provide a resume for said candidate. Evaluation criteria are listed in decreasing importance. That is, evaluation criterion 1 is most important, followed by criterion 2, etc.

Project Funding Priorities

Applicant proposal must provide an explanation, including description and extent of involvement, in priority business sector(s). While Applicants involved in any industry sector may apply to the program, priority consideration is given to those operating in the following sectors: (a) Agribusiness (including food processing and distribution, and agricultural equipment), (b) Defense conversion, (c) Energy, (d) Environment (including environmental clean-up), (e) Financial services (including banking and accounting), (f) Housing, construction and infrastructure, (g) Medical equipment, supplies, pharmaceuticals, and health care management, (h) Product standards and quality control, (i) Telecommunications, (j) Transportation and (k) Biotechnology.

Selection Procedures

Each application will receive an independent, objective review by one or more three or four-member independent review panels qualified to evaluate applications submitted under the program. Applications will be evaluated on a competitive, ''rolling'' basis as they are received in accordance with the selection evaluation set forth above. Awards will be made to those applications which successfully meet the selection criteria. If funds are not available for all those applications which successfully meet the criteria, awards will be made to the first applications received which successfully do so. ITA reserves the right to reject any application; to limit the number of interns per applicant; and to waive informalities and minor irregularities in applications received. The final selecting official reserves the right to make awards based on U.S. geographic and organization size diversity among applicants, as well as to consider priority business sectors (listed in Project Funding Priorities, above) when making awards. Recipients may be eligible, pursuant to approval of an amendment of an active award, to host additional interns under the program. ITA reserves the right to evaluate applicants based on past performance. The Director of the SABIT Program is the final selecting official for each award.

Intergovernmental Review

Applications under this program are not subject to Executive Order 12372, ''Intergovernmental Review of Federal Programs.''

Application Forms and Kit

To obtain an application kit, please refer to the section above marked **ADDRESSES**. All applicants must submit a completed Standard Form 424, ''Application for Federal Assistance'' and a Standard Form 424B, ''Assurances—Non-Construction Programs.'' All applicants must also submit a completed Form CD–511, ''Certifications Regarding Debarment, Suspension and Other Responsibility Matters; Drug-Free Workplace Requirements and Lobbying''. Form CD–511 and Standard Forms 424 and 424B are included in the Application Kit supplied by the SABIT office. Applicants will also need to provide the information to fulfill the ''Evaluation Criteria'' listed above.

An original and two copies of the application (including Standard Form 424 (Rev. 4–92) and supplemental material) are to be sent to the address designated in the Application Kit and postmarked no later than the closing date. Please sign the original application (including forms) with blue ink. Applications will be considered on a ''rolling'' basis as they are received, subject to the availability of funds.

Additional Information: Applicants must also submit: (1) Evidence of adequate financial resources of Applicant organization to cover the costs involved in providing an internship(s). As evidence of such resources, Applicant should submit financial statements audited by an outside organization or an annual report including such statements. If these are not available, a letter should be provided from the Applicant's bank or outside accountant attesting to the financial capability of the firm to undertake the scope of work involved in training an intern under the SABIT program.

(2) Evidence of a satisfactory record of performance in grants, contracts and/or cooperative agreements with the Federal Government, if applicable. (Applicants who are or have been deficient in current or recent performance in their grants, contracts, and/or cooperative agreements with the Federal Government shall be presumed to be unable to meet this requirement). (3) A statement that the Applicant will provide medical insurance coverage for interns during their internships. Recipients will be required to submit proof of the interns' medical insurance coverage to the Federal Program Officer before the interns' arrivals. The insurance coverage must include an

accident and comprehensive medical insurance program as well as coverage for accidental death, emergency medical evacuation, and repatriation.

Disposition of Unsuccessful Applications

Unsuccessful applications may be retained or destroyed by the SABIT Program.

Other Requirements

Department of Commerce Pre-Award Notification Requirements for Grants and Cooperative Agreements, which are contained in **Federal Register** Notice of October 1, 2001 (66 FR 49917), are applicable.

All applicants are advised of the following:

1. Participating companies will be required to comply with all relevant U.S. tax and export regulations. Export controls may relate not only to licensing of products for export, but also to technical data transfer. The U.S. Department of Commerce's Bureau of Export Administration (BXA) reviews applications in question to determine whether export licenses are required. SABIT will not award a grant until the export license issue has been satisfied.

2. The following statutes apply to this program: Section 907 of the FREEDOM Support Act, Public Law 102–511, 22 U.S.C. 5812 note (Restriction on Assistance to the Government of Azerbaijan); 7 U.S.C. 5201 *et seq.* (Agricultural Competitiveness and Trade—the Bumpers Amendment); The Foreign Assistance Act of 1961, as amended, including Chapter 11 of Part I, section 498A(b), Public Law 102–511, 22 U.S.C. 2295a(b) (regarding ineligibility for assistance); 22 U.S.C. 2420(a), Section 660(a) of The Foreign Assistance Act of 1961, as amended (Police Training Prohibition); and provisions in the annual Foreign Operations, Export Financing, and Related Programs Appropriations Acts, concerning impact on jobs in the United States (see, e.g., 536 of Public Law 106–113).

3. The collection of information is approved by the Office of Management and Budget, OMB Control Number 0625–0225. Public reporting for this collection of information is estimated to be three hours per response, including the time for reviewing instructions, and completing and reviewing the collection of information. All responses to this collection of information are voluntary, and will be protected from disclosure to the extent allowed under the Freedom of Information Act. The use of Standard Forms 424 and 424B is approved under OMB Control Numbers 0348–0043 and 0348–0040, respectively.

Notwithstanding any other provision of law, no person is required to respond to nor shall a person be subject to the requirements of the Paperwork Reduction Act unless that collection of information displays a currently valid OMB Control Number. Send comments regarding the burden estimate or any other aspect of this collection of information, including suggestions for reducing this burden, to the Reports Clearance Officer, International Trade Administration, Department of Commerce, Room 4001, 14th and Constitution Ave., NW., Washington, DC 20230.

4. *Executive Order 12866:* It has been determined that this notice is not significant for purposes of E.O. 12866.

5. *Executive Order 13132:* It has been determined that this notice does not contain policies with Federalism implications as that term is defined in E.O. 13132.

Because notice and comment are not required under 5 U.S.C. 553, or any other law, for notices relating to public property, loans, grants, benefits or contracts (5 U.S.C. 553(a)), a Regulatory Flexibility Analysis is not required and has not been prepared for this notice, 5 U.S.C. 601 *et seq.*

Dated: December 7, 2001.

Liesel C. Duhon,

Director, SABIT Program.

[FR Doc. 01–30780 Filed 12–12–01; 8:45 am]

BILLING CODE 3510–HE–P

DEPARTMENT OF COMMERCE

National Oceanic and Atmospheric Administration

Evaluation of Coastal Zone Management Programs

AGENCY: Office of Ocean and Coastal Resource Management, National Ocean Service, National Oceanic and Atmospheric Administration (NOAA), DOC.

ACTION: Notice of intent to evaluate.

SUMMARY: The NOAA Office of Ocean and Coastal Resource Management (OCRM) announces its intent to evaluate the performance of the Louisiana Coastal Resources Program.

This Coastal Zone Management Program evaluation will be conducted pursuant to section 312 of the Coastal Zone Management Act of 1972 (CZMA), as amended and regulations at 15 CFR part 923, subpart L.

The CZMA requires continuing review of the performance of states with respect to coastal program implementation. Evaluation of Coastal Zone Management Programs requires findings concerning the extent to which a state has met the national objectives, adhered to its Coastal Management Program document approved by the Secretary of Commerce, and adhered to the terms of financial assistance awards funded under the CZMA.

The evaluation will include a site visit, consideration of public comments, and consultations with interested Federal, state, and local agencies and members of the public. A public meeting will be held as part of the site visit.

Notice is hereby given of the dates of the site visit for this evaluation, and the dates, local times, and locations of the public meeting during the site visit.

The Louisiana Coastal Resources Program evaluation site visit will be held February 18–22, 2002. One public meeting will be held during the week. The public meeting will be on Wednesday, February 20, 2002, at 7 p.m., in the LaSalle Office Building, 617 North 3rd Street, Baton Rouge, Louisiana.

Copies of Louisiana's most recent performance reports, as well as OCRM's notification and supplemental request letters to the State, are available upon request from OCRM. Written comments from interested parties regarding this Program are encouraged and will be accepted until 15 days after the public meeting. Please direct written comments to Douglas Brown, Acting Deputy Director, Office of Ocean and Coastal Resource Management, NOS/NOAA, 1305 East-West Highway, 10th floor, Silver Spring, Maryland 20910. When the evaluation is completed, OCRM will place a notice in the **Federal Register** announcing the availability of the Final Evaluation Findings.

FOR FURTHER INFORMATION CONTACT: Douglas Brown, Acting Deputy Director, Office of Ocean and Coastal Resource Management, NOS/NOAA, 1305 East-West Highway, Silver Spring, Maryland 20910, (301) 713–3155, Extension 215.

(Federal Domestic Assistance Catalog 11.419 Coastal Zone Management Program Administration)

Dated: December 6, 2001.

Alan Neuschatz,

Chief Financial Officer/Chief Information Officer for Ocean Services and Coastal Zone Management.

[FR Doc. 01–30789 Filed 12–12–01; 8:45 am]

BILLING CODE 3510–08–M

DEPARTMENT OF COMMERCE

National Oceanic and Atmospheric Administration

[I.D. 110101B]

Harbor Porpoise Bycatch Estimates for 2000

AGENCY: National Marine Fisheries Service (NMFS), National Oceanic and Atmospheric Administration (NOAA), Commerce.

ACTION: Notice of availability.

SUMMARY: NMFS announces the availability of harbor porpoise bycatch estimates for January through December, 2000.

ADDRESSES: Send information requests to Protected Resources Division, NOAA Fisheries, One Blackburn Drive, Gloucester, MA 01930–2298 or Marine Mammal Conservation Division, NOAA Fisheries, Office of Protected Resources, 1315 East-West Highway, Silver Spring, MD 20910.

FOR FURTHER INFORMATION CONTACT: Kimberly Thounhurst, Northeast Region, (978) 281–9138 or Emily Hanson Menashes, Office of Protected Resources, (301) 713–2322.

SUPPLEMENTARY INFORMATION:

Electronic Access

The 2000 harbor porpoise bycatch estimates are accessible by the Internet at *http://www.nero.nmfs.gov/porptrp/*.

Background

NMFS published a final rule implementing the Harbor Porpoise Take Reduction Plan (HPTRP) on December 2, 1998 (63 FR 66464) to reduce the incidental take of the Gulf of Maine/Bay of Fundy stock of harbor porpoise in the Northeast sink gillnet fishery and Mid-Atlantic coastal gillnet fishery to below the Potential Biological Removal (PBR) level for the stock. The HPTRP contains management measures including fishery closures and gear modifications. The HPTRP measures are described in the December 1998 final rule and correction notice (63 FR 71041, December 23, 1998).

The most current estimate of incidental take of harbor porpoise for 2000 by fishery is available. This information is provided pursuant to a requirement of the May 12, 2000, Settlement Agreement in *Center for Marine Conservation et al.* v. *Daley et al.* (D. DC, Civ. No. 1:98CV02029 EGS). For 2000, the total estimated bycatch of harbor porpoise was 529 animals (CV=0.36). This estimate is comprised of 507 animals (coefficient of variation (CV)=0.37) from the Northeast sink gillnet fishery, 21 animals (CV=0.76) from the Mid-Atlantic coastal gillnet fishery, and 1 animal (CV unknown) from an unknown Mid-Atlantic fishery. Estimates of harbor porpoise bycatch in Canadian waters for 2000 are not currently available. Additional detail about the 2000 harbor porpoise bycatch estimates in U.S. waters is available in the 2000 bycatch analysis provided to the plaintiffs of the settlement agreement and can be obtained by contacting NMFS at one of the locations given in the **ADDRESSES** section.

For 1999, the total estimated bycatch of harbor porpoise was 323 animals (CV=0.25), comprised of 270 animals (CV=0.28) from the Northeast sink gillnet fishery and 53 animals (CV=0.49) from the Mid-Atlantic coastal gillnet fishery. 1999 and 2000 represent the years since implementation of the Harbor Porpoise Take Reduction Plan and fishery management measures intended to reduce harbor porpoise bycatch. From 1994 through 1998, the mean annual mortality of harbor porpoise was 1,521 animals (CV=0.10), comprised of 1163 animals (CV=0.11) from the Northeast sink gillnet fishery and 358 animals (CV=0.20) from the Mid-Atlantic coastal gillnet fishery.

Dated: December 10, 2001.

David Cottingham,

Deputy Director, Office of Protected Resources, National Marine Fisheries Service.

[FR Doc. 01–30830 Filed 12–12–01; 8:45 am]

BILLING CODE 3510–22–S

COMMODITY FUTURES TRADING COMMISSION

Sunshine Act Meeting

AGENCY HOLDING THE MEETING: Commodity Futures Trading Commission.

TIME AND DATE: 11 a.m., Friday, January 4, 2002.

PLACE: 1155 21st St., NW., Washington, DC, 9th Floor Conference Room.

STATUS: Closed.

MATTERS TO BE CONSIDERED: Surveillance Matters.

CONTACT PERSON FOR MORE INFORMATION: Jean A. Webb, 202–418–5100.

Jean A. Webb,

Secretary of the Commission.

[FR Doc. 01–30887 Filed 12–11–01; 11:58 am]

BILLING CODE 6351–01–M

COMMODITY FUTURES TRADING COMMISSION

Sunshine Act meeting

AGENCY HOLDING THE MEETING: Commodity Futures Trading Commission.

TIME AND DATE: 11 a.m., Friday, January 11, 2002.

PLACE: 1155 21st St., NW., Washington, D.C., 9th Floor Conference Room.

STATUS: Closed.

MATTERS TO BE CONSIDERED: Surveillance Matters.

CONTACT PERSON FOR MORE INFORMATION: Jean A. Webb, 202–418–5100.

Jean A. Webb,

Secretary of the Commission.

[FR Doc. 01–30888 Filed 12–11–01; 11:58 am]

BILLING CODE 6351–01–M

COMMODITY FUTURES TRADING COMMISSION

Sunshine Act Meeting

AGENCY HOLDING THE MEETING: Commodity Futures Trading Commission.

TIME AND DATE: 11 a.m., Friday, January 18, 2002.

PLACE: 1155 21st St., NW., Washington, DC, 9th Floor Conference Room.

STATUS: Closed.

MATTERS TO BE CONSIDERED: Surveillance Matters.

CONTACT PERSON FOR MORE INFORMATION: Jean A. Webb, 202–418–5100.

Jean A. Webb,

Secretary of the Commission.

[FR Doc. 01–30889 Filed 12–11–01; 11:58 am]

BILLING CODE 6351–01–M

COMMODITY FUTURES TRADING COMMISSION

Sunshine Act Meeting

AGENCY HOLDING THE MEETING: Commodity Futures Trading Commission.

TIME AND DATE: 11 a.m., Friday, January 25, 2002.

PLACE: 1155 21st St., NW., Washington, D.C., 9th Floor Conference Room.

STATUS: Closed.

MATTERS TO BE CONSIDERED: Surveillance Matters.

CONTACT PERSON FOR MORE INFORMATION: Jean A. Webb, 202–418–5100.

Jean A. Webb,

Secretary of the Commission.

[FR Doc. 01–30890 Filed 12–11–01; 11:58 am]

BILLING CODE 6351–01–M

CORPORATION FOR NATIONAL AND COMMUNITY SERVICE

Proposed Information Collection; Comment Request

AGENCY: Corporation for National and Community Service.

ACTION: Notice.

SUMMARY: The Corporation for National and Community Service (hereinafter the ''Corporation''), as part of its continuing effort to reduce paperwork and respondent burden, conducts a preclearance consultation program to provide the general public and Federal agencies with an opportunity to comment on proposed and/or continuing collections of information in accordance with the Paperwork Reduction Act of 1995 (PRA95) (44 U.S.C. 3506(c)(2)(A)). This program helps to ensure that requested data can be provided in the desired format, reporting burden (time and financial resources) is minimized, collection instruments are clearly understood, and the impact of collection requirement on respondents can be properly assessed.

Currently, the Corporation is conducting a study of training received by AmeriCorps*VISTA Members and Project Supervisors. This particular submission concerns the collection of information, from AmeriCorps*VISTA Project Supervisors only, as to their perceptions of the efficacy and impact of the training. Copies of the information collection request can be obtained by contacting the office listed below in the **ADDRESSES** section of this notice.

The Corporation is particularly interested in comments which:

- Evaluate whether the proposed collection of information is necessary for the proper performance of the functions of the Corporation, including whether the information will have practical utility;
- Evaluate the accuracy of the Corporation's estimate of the burden of the proposed collection of information, including the validity of the methodology and assumptions used;
- Enhance the quality, utility and clarity of the information to be collected; and
- Minimize the burden of the collection of information on those who are to respond, including through the use of appropriate automated, electronic, mechanical, or other technological collection techniques or other forms of information technology; e.g., permitting electronic submissions of responses.

DATES: Written comments must be submitted to the office listed in the **ADDRESSES** section by February 11, 2002.

ADDRESSES: Send comments to the Corporation for National and Community Service, Office of Evaluation, Attn: Carol Hafford, 1201 New York Avenue, NW., Washington, DC, 20525, or *chafford@cns.gov.*

FOR FURTHER INFORMATION CONTACT: Carol Hafford (202) 606–5000, ext. 232 or *chafford@cns.gov.*

SUPPLEMENTARY INFORMATION:

I. Background

The AmeriCorps*VISTA program provides training for members and the project supervisors who support members serving in community-based organizations, schools, and state/local agencies, and other institutions. Corporation-sponsored training takes place along a timeline based on when AmeriCorps*VISTA members begin and end their service periods. Training cycles occur five times each year, and each cycle begins with Project Supervisor Training. Project Supervisor Training occurs about three months prior to the time members are scheduled to begin service. This cluster or national-level event lasts about three or four days, and focuses on the information supervisors need to make their AmeriCorps*VISTA experience successful for their organizations as well as the members.

The second training event in the cycle is Pre-Service Orientation (PSO). It is for all new AmeriCorps*VISTA member candidates and takes place immediately prior to the start of service with the sponsoring organization. PSO usually occurs at the cluster or national level and less frequently at the state level. It lasts about three days and is required for all AmeriCorps*VISTA candidates prior to their being sworn in. Major emphases are placed on understanding the mission of AmeriCorps*VISTA and its anti-poverty focus, understanding the role of an AmeriCorps*VISTA member in building sustainable community infrastructure, developing an ethic of service, and learning about AmeriCorps*VISTA rules, procedures, and benefits.

The third training event is On-Site Orientation and Training (OSOT). This event is conducted by the sponsoring organization for its new AmeriCorps*VISTA members. The sponsor is encouraged to involve members of the community as well as the organization's staff in this training, which may last from one to three weeks. The main purposes of OSOT are to orient a new AmeriCorps*VISTA member to his/her role in the project and to the community of service.

For most AmeriCorps*VISTA members, Early Service Training (EST) is their final formal training event during their year of service with the sponsor. EST occurs three to five months into the service period and usually takes place at cluster or national levels. The purposes are to reinforce the prior training and experiences of the AmeriCorps*VISTA members by discussing problems and successes related to project goals and developing needed skills to address these concerns.

The AmeriCorps*VISTA Member and Supervisor Training study seeks to determine members' and supervisors' perceptions of the efficacy of multiple training components in developing the knowledge, skills, and attitudes needed to conduct capacity-building and sustainability activities. The study will also address the perceived impact of training and supervisor support on members' performance, retention, and satisfaction with the service experience.

II. Current Action

The Corporation seeks approval of one survey form that will be used to examine AmeriCorps*VISTA supervisors perceptions about training. This requires information from project supervisors that will address: (1) The extent to which Corporation-sponsored training prepares Supervisors to recruit, retain, and support AmeriCorps*VISTA members; and (2) whether, in their opinion, training provided to AmeriCorps*VISTA members contributes to the members' performance, retention, and satisfaction with the service experience.

Type of Review: New collection.

Agency: Corporation for National and Community Service.

Title: AmeriCorps*VISTA Project Supervisors Survey.

OMB Number: None.

Agency Number: None.

Affected Public: AmeriCorps*VISTA project supervisors at community-based organizations, elementary and secondary schools, state and local agencies.

Total Respondents: Approximately 400.

Frequency: Annual.

Average Time Per Response: 30 minutes.

Estimated Total Burden Hours: 200.

Total Burden Cost (capital/startup): None.

Total Burden Cost (operating/maintenance): None.

Comments submitted in response to this notice will be summarized and/or included in the request for Office of Management and Budget approval of the information collection request; they will also become a matter of public record.

Dated: December 7, 2001.

David B. Rymph,

Acting Director, Department of Evaluation and Effective Practices.

[FR Doc. 01–30767 Filed 12–12–01; 8:45 am]

BILLING CODE 6050–$$–P

DEPARTMENT OF DEFENSE

Department of the Navy

Notice of Deadline for Submission of Donation Application for the Harbor Tug Ex-HOGA (YTM 146)

AGENCY: Department of the Navy, DOD.

ACTION: Notice.

SUMMARY: The Department of the Navy hereby gives notice of the deadline of June 13, 2002 for submission of a donation application for the harbor tug Ex-HOGA (YTM 146), a National Historic Landmark. Ex-HOGA is located at Suisun Bay National Defense Reserve Fleet, Benicia, CA.

The donation of Naval vessels to qualified organizations is authorized by Title 10, section 7306 of the United States Code. A qualified organization is: (1) Any state, commonwealth, or possession of the United States or any municipal corporation or political subdivision thereof; (2) the District of Columbia; (3) any nonprofit entity organized pursuant to section 501(c)(3) of the Internal Revenue Code. By law, the transfer of a Navy ship for donation must occur at no cost to the United States Government. The successful applicant will be required to place Ex-HOGA on static display as a maritime museum/memorial and to maintain the vessel in a condition that is satisfactory to the Secretary of the Navy.

A qualified organization wishing to apply for Ex-HOGA must submit a comprehensive donation application to the Navy that addresses the following areas:

Financial Plan: The Financial Plan will estimate the start-up and operating costs, and provide detailed evidence of firm financing adequate to cover these costs. Start-up costs include towing, mooring (this includes but not limited to the cost of building, leasing, and improving dock and/or shore facilities, and dredging), maintenance, museum development, and meeting environmental requirements (including permitting fees and expenses). Operating costs are those associated with operating and maintaining the vessel as a museum and memorial, including rent, utilities, personnel, insurance, etc.

Firm financing means available funding to ensure the first five years of operation and future stability for long-term operation. This can include pledges, loans, gifts, bonds, funds on deposit at a financial institution, or any combination of the above. The applicant must also provide income projections from sources such as individual and group admissions, facility rental fees and gift shop revenues sufficient to cover the estimated operating expenses.

Technical: The technical area is comprised of four equally weighted plans: Towing, Mooring, Maintenance, and Environmental.

The Towing Plan describes how Ex-HOGA will be towed from the Suisun Bay National Defense Reserve Fleet in Benicia, CA, to the permanent display site proposed by the applicant. The Towing Plan must comply with all Navy Tow Manual requirements.

The Mooring Plan describes how Ex-HOGA will be secured at its permanent display site during normal and extreme weather conditions (including the 100-year storm event) to prevent damage to the ship, its mooring system, the pier, and surrounding facilities. The mooring location must be acceptable to the Navy, and not obstruct or interfere with navigation.

The Environmental Plan describes how the applicant will comply with all Local, State, Federal environmental and public health and safety regulations and permitting requirements. The applicant must also provide information necessary for the Navy to complete an environmental assessment of the donation as required by the National Environmental Policy Act (NEPA), including the impact of the donation on the natural and man-made environment, local infrastructure, and evaluation of the socio-economic consequences of the donation.

The Maintenance Plan must describe plans for long-term, short-term, and daily maintenance of the vessel, including ship preservation and maintenance schedule, underwater hull inspections, emergency response and fire/flood/intrusion control, pest control, security, periodic dry-docking, and qualifications of the maintenance team.

Curatorial: The applicant must describe in the Curatorial/Museum Plan the qualifications for a professional curator (and curator staff, if necessary). The plan should also establish a Collections Management Plan that describes how the museum will collect and manage artifacts, including a statement of purpose and description of access, authority, and collection management responsibilities.

The Curatorial Plan must also include a Historic Management Plan that describes how the museum will display the vessel and exhibits, including a description of the historical context of the ship, historical subject matter that will be displayed with the ship, and exhibit display plans.

If the Navy receives more than one application for donation of Ex-HOGA, a two-step evaluation process will be utilized. Phase I is a screening process to determine if applications meet minimum requirements. Phase II is a comparative analysis of the applications to determine the best-qualified applicant. Where two or more application meet minimum requirements, the Navy may consider additional criteria. This criterion may include submitting information on community support and benefit to the Navy.

Community Support: Includes evidence of local support such as letters of support from individuals, organizations, newspapers articles or editorials, letters of endorsement from the city and/or local Government, and written approval of the local Port Authority (this is essential). Evidence of regional support should also be provided. This includes letters of endorsement from adjacent communities and counties, cities or states. Also describe how the location of the ship will encourage public visitation and tourism, become an integral part of the community, and how the ship will enhance community development.

Benefit to the Navy: Describe how the donee may support Navy recruiting efforts. Other areas of benefit to the Navy include a connection between the Navy and the proposed berthing location, how veterans associations in the area are willing to support the vessel, how the donee will honor veterans' contributions to the United States, and how the exhibit will commemorate those contributions and showcase Naval traditions.

The relative importance for each of the areas that must be addressed in the donation application are as follows:

Financial and technical are the most important criteria and are equal in importance. Benefit to the Navy is next in importance. Curatorial and Community are less important than Benefit to the Navy and are equal in importance.

The Secretary of the Navy will make the final decision as to the donation of Ex-HOGA. After the decision to donate the ship is made, the Navy notifies Congress and Congress has 30 days of continuous session to consider the decision.

A detailed description of all donation application criteria and donation application information can be obtained from the Navy Donation Program Web Site at *http://www.navsea.navy.mil/ndp/*, or from the contact person listed below.

FOR FURTHER INFORMATION CONTACT: Commander, Naval Sea Systems Command, ATTN: Ms. Gloria Carvalho (PMS 333G), 1333 Isaac Hull Avenue SE., Stop 2701, Washington Navy Yard, DC 20376–2701, telephone (202) 781–0485.

Dated: December 7, 2001.

T. J. Welsh,

Lieutenant Commander, Judge Advocate General's Corps, U.S. Navy, Federal Register Liaison Officer.

[FR Doc. 01–30791 Filed 12–12–01; 8:45 am]

BILLING CODE 3810–FF–P

DEPARTMENT OF EDUCATION

Notice of Proposed Information Collection Requests

AGENCY: Department of Education.

SUMMARY: The Leader, Regulatory Information Management Group, Office of the Chief Information Officer, invites comments on the proposed information collection requests as required by the Paperwork Reduction Act of 1995.

DATES: Interested persons are invited to submit comments on or before February 11, 2002.

SUPPLEMENTARY INFORMATION: Section 3506 of the Paperwork Reduction Act of 1995 (44 U.S.C. Chapter 35) requires that the Office of Management and Budget (OMB) provide interested Federal agencies and the public an early opportunity to comment on information collection requests. OMB may amend or waive the requirement for public consultation to the extent that public participation in the approval process would defeat the purpose of the information collection, violate State or Federal law, or substantially interfere with any agency's ability to perform its statutory obligations. The Leader, Regulatory Information Management Group, Office of the Chief Information Officer, publishes that notice containing proposed information collection requests prior to submission of these requests to OMB. Each proposed information collection, grouped by office, contains the following: (1) Type of review requested, e.g. new, revision, extension, existing or reinstatement; (2) Title; (3) Summary of the collection; (4) Description of the need for, and proposed use of, the information; (5) Respondents and frequency of collection; and (6) Reporting and/or Recordkeeping burden. OMB invites public comment.

The Department of Education is especially interested in public comment addressing the following issues: (1) Is this collection necessary to the proper functions of the Department; (2) will this information be processed and used in a timely manner; (3) is the estimate of burden accurate; (4) how might the Department enhance the quality, utility, and clarity of the information to be collected; and (5) how might the Department minimize the burden of this collection on the respondents, including through the use of information technology.

Dated: December 7, 2001.

John Tressler,

Leader, Regulatory Information Management, Office of the Chief Information Officer.

Student Financial Assistance

Type of Review: Revision.

Title: Federal Family Education Loan (FFEL) , Direct Loan, and Perkins Loan Discharge Applications.

Frequency: One time.

Affected Public: Businesses or other for-profit.

Reporting and Recordkeeping Hour Burden:

Responses: 70,200.

Burden Hours: 35,100.

Abstract: These forms will serve as the means of collecting the information necessary to determine whether a FFEL or Direct Loan borrower qualifies for a loan discharge based on total and permanent disability, school closure, false certification of student eligibility, or unauthorized signature. The school closure discharge application may also be used by Perkins Loan borrowers applying for a closed school discharge.

Requests for copies of the proposed information collection request may be accessed from *http://edicsweb.ed.gov,* or should be addressed to Vivian Reese, Department of Education, 400 Maryland Avenue, SW., Room 4050, Regional Office Building 3, Washington, DC 20202–4651. Requests may also be electronically mailed to the Internet address *OCIO.RIMG@ed.gov* or faxed to 202–708–9346. Please specify the complete title of the information collection when making your request.

Comments regarding burden and/or the collection activity requirements should be directed to Joseph Schubart at (202) 708–9266 or via his Internet address *Joe.Schubart@ed.gov.* Individuals who use a telecommunications device for the deaf (TDD) may call the Federal Information Relay Service (FIRS) at 1–800–877–8339.

[FR Doc. 01–30771 Filed 12–12–01; 8:45 am]

BILLING CODE 4000–01–P

DEPARTMENT OF ENERGY

Environmental Assessment and Finding of No Significant Impact for Transportation of Low-Level Radioactive Waste From the Oak Ridge Reservation to Off-Site Treatment or Disposal Facilities

AGENCY: Department of Energy.

ACTION: Notice of availability.

SUMMARY: The Department of Energy (DOE), announces the availability of the Environmental Assessment (EA) and Finding of No Significant Impact (FONSI) for Transportation of Low-Level Radioactive Waste from the Oak Ridge Reservation to Off-Site Treatment or Disposal Facilities (DOE/EA–1315) for public review and comment. The EA has been prepared in accordance with the requirements of the National Environmental Policy Act of 1969 as amended (NEPA); Council on Environmental Quality regulations implementing NEPA, 40 CFR parts 1500–1508; and DOE NEPA Implementing Procedures.

DATES: The review period for the EA/FONSI begins with publication of this notice and extends for 30 days. Comments postmarked after that date will be considered to the extent practicable.

ADDRESSES: Comments on the EA/FONSI may be submitted by mail: Mr. William G. McMillan, U.S. Department of Energy, Oak Ridge Operations Office, PO Box 2001, Oak Ridge, Tennessee 37831, or by telephone (1–865–241–6426), or by fax (1–865–576–6074), or electronically at *McMillanWG@oro.doe.gov,* or by submitting comments to the NEPA e-mail box at *NEPA@oro.doe.gov.*

Copies of the Draft EA may also be obtained by contacting Mr. William McMillan by any of the means described

above. The Draft EA is also available for review at the U.S. Department of Energy Public Reading Room at 230 Warehouse Road, Oak Ridge, TN 37830. Phone: (865) 241–4780 or 1–800–382–6938, option 6).

FOR FURTHER INFORMATION CONTACT: For general information on the DOE NEPA process, please contact: Ms. Carol M. Borgstrom, Director, Office of NEPA Policy and Compliance (EH–42), U.S. Department of Energy, 1000 Independence Avenue, SW., Washington, DC 20585, telephone 202–586–4600, or leave a message at 1–800–472–2756.

SUPPLEMENTARY INFORMATION: The EA evaluates the potential environmental impacts associated with transportation of legacy and operational low-level (radioactive) waste (LLW) from the Oak Ridge Reservation (ORR) in Tennessee for treatment or disposal at various locations in the United States. DOE has determined that the proposed action is not a major Federal action that would significantly affect the quality of the human environment within the context of NEPA. Therefore, preparation of an environmental impact statement is not necessary, and DOE is issuing a FONSI. The EA also evaluates the potential environmental impacts associated with the no action alternative.

The draft Environmental Assessment was distributed in June 2000 to the NEPA coordinators in each state through which proposed rail or highway routes pass, as well as to local stakeholders in the Oak Ridge, Tennessee, area. Their comments were received and incorporated into the document. Because this document involves transportation across the continental United States, however, DOE has concluded that it should provide opportunity for further comment to a broader distribution. Therefore, these documents are available for a 30-day public comment period. If significant issues are documented as a result of this comment period, the document will be revised as appropriate.

The DOE-Oak Ridge Operations (ORO) Office has LLW that must be transported from Oak Ridge to treatment and disposal facilities because on-site disposal is not available for the expected large life-cycle volumes, nor for the technical constituents, of many ORR LLW streams. The reservation encompasses three major DOE facilities: Oak Ridge National Laboratory (ORNL), Oak Ridge Y–12 Plant, and East Tennessee Technology Park (ETTP). Large quantities of LLW have been generated as a result of normal operations associated with research or manufacturing conducted at these facilities. DOE legacy and operational LLW on ORR (approximately 40,000 m^3) is managed in compliant storage. It is estimated that 7700 m^3 of waste could be generated annually from operations over the next 20 years. While a large portion of ORR LLW will eventually be shipped to other federally owned, DOE-operated disposal facilities, DOE also intends to use commercial disposal facilities when cost-effective, compliant, and in the best interest of the government.

The planned action is to package as needed, load, and ship existing and forecasted ORR LLW to existing or future facilities at other DOE sites such as the Nevada Test Site (NTS), the Hanford Reservation, the Savannah River Site, and licensed commercial nuclear waste treatment or disposal facilities. These include Envirocare of Utah Inc. (Envirocare), Clive, Utah; Waste Control Specialists (WCS), Andrews, Texas; commercial facilities near the Savannah River Site (SRS), Aiken, South Carolina; commercial facilities near ORR; and commercial facilities near the Hanford Site, Richland, Washington. LLW will either be shipped directly from ORR to a DOE or licensed commercial disposal facility or to a licensed commercial treatment facility and then to a DOE or licensed commercial disposal facility. ORR LLW will generally be transported by truck but may also be transported by rail or intermodal carrier (i.e., truck and rail combination) when advantageous.

The impact analysis in the EA addressed the potential effects of loading and transporting accumulated legacy and ongoing operations LLW from Oak Ridge, Tennessee, to destinations representative of other DOE sites and licensed commercial nuclear waste treatment or disposal facilities. The potential effects of transport over both highway and rail routes were evaluated. Evaluation of LLW being generated by ongoing operations at the ORR was based on volumes anticipated over a 20-year life cycle. The potential effects were evaluated on per shipment, annual, and 20-year bases. The EA did not address waste for which treatment and disposal are addressed pursuant to the Comprehensive Environmental Response, Compensation, and Liability Act of 1980 (CERCLA), on-site activities that are already being conducted as a part of routine waste management at the ORR, or activities conducted prior to loading or at the destination facilities.

Issued in Oak Ridge, Tennessee, on October 29, 2001.

David Allen,

Oak Ridge Operations Office, NEPA Compliance Officer.

[FR Doc. 01–30807 Filed 12–12–01; 8:45 am]

BILLING CODE 6450–01–P

DEPARTMENT OF ENERGY

Federal Energy Regulatory Commission

[Docket Nos. ER01–3000–001, EC01–146–001 and RT01–101–001]

International Transmission Company; and DTE Energy Company; Notice of Filing

December 7, 2001.

Take notice that on November 27, 2001, International Transmission Company (International Transmission) tendered for filing with Federal Energy Regulatory Commission (Commission) a Supplemental Agreement. The Supplemental Agreement is a multi-party contract by and among International Transmission, the Midwest Independent Transmission System Operator, Inc. (Midwest ISO), and each of the Midwest ISO transmission owners (Owners).

Any person desiring to be heard or to protest such filing should file a motion to intervene or protest with the Federal Energy Regulatory Commission, 888 First Street, NE., Washington, DC 20426, in accordance with Rules 211 and 214 of the Commission's rules of practice and procedure (18 CFR 385.211 and 385.214). All such motions and protests should be filed on or before December 14, 2001. Protests will be considered by the Commission to determine the appropriate action to be taken, but will not serve to make protestants parties to the proceedings. Any person wishing to become a party must file a motion to intervene. Copies of this filing are on file with the Commission and are available for public inspection. This filing may also be viewed on the Web at *http://www.ferc.gov* using the ''RIMS'' link, select ''Docket#'' and follow the instructions (call 202–208–2222 for assistance). Comments, protests and interventions may be filed electronically via the Internet in lieu of paper. See, 18 CFR 385.2001(a)(1)(iii) and the instructions on the Commission's Web site under the ''e-Filing'' link.

Linwood A. Watson, Jr.,

Acting Secretary.

[FR Doc. 01–30795 Filed 12–12–01; 8:45 am]

BILLING CODE 6717–01–P

DEPARTMENT OF ENERGY

Federal Energy Regulatory Commission

[Docket No. ER01–3142–000]

Midwest Independent Transmission System Operator, Inc.; Notice of Filing

December 7, 2001.

Take notice that on November 27, 2001, the Midwest Independent Transmission System operator, Inc. (the Midwest ISO) tendered for filing with the Federal Energy Regulatory Commission (Commission) redlined and clean versions of Substitute Original Sheet No. 162a to the Midwest ISO Open Access Transmission Tariff (OATT), FERC Electric Tariff, First Revised Volume No. 1, which was filed with the Commission on November 26, 2001 and contained a typographical error. The Midwest ISO filing in this proceeding regarded, among other things, Attachments N and N–1 of the Midwest ISO OATT.

The Midwest ISO has electronically served copies of its filing, with attachments, upon all Midwest ISO Members, Member representatives of Transmission Owners and Non-Transmission Owners, the Midwest ISO Advisory Committee participants, Policy Subcommmittee participants, as well as all state commissions within the region. In addition, the filing has been electronically posted on the Midwest ISO's Web site as *www.midwestiso.org* under the heading ''Filings to FERC'' for other interested parties in this matter.

Any person desiring to be heard or to protest such filing should file a motion to intervene or protest with the Federal Energy Regulatory Commission, 888 First Street, NE., Washington, DC 20426, in accordance with Rules 211 and 214 of the Commission's rules of practice and procedure (18 CFR 385.211 and 385.214). All such motions and protests should be filed on or before December 18, 2001. Protests will be considered by the Commission to determine the appropriate action to be taken, but will not serve to make protestants parties to the proceedings. Any person wishing to become a party must file a motion to intervene. Copies of this filing are on file with the Commission and are available for public inspection. This filing may also be viewed on the Commission's Web site at *http://www.ferc.gov* using the ''RIMS'' link, select ''Docket #'' and follow the instructions (call 202–208–2222 for assistance). Comments, protests and interventions may be filed electronically via the internet in lieu of paper. See, 18 CFR 385.2001(a)(1)(iii) and the instructions on the Commission's Web site under the ''e-filing'' link.

Linwood A. Watson, Jr.,

Acting Secretary.

[FR Doc. 01–30794 Filed 12–12–01; 8:45 am]

BILLING CODE 6717–01–P

DEPARTMENT OF ENERGY

Federal Energy Regulatory Commission

[Docket No. EL02–34–000]

Nevada Power Company, Complainant v. BP Energy Company, Respondent; Notice of Complaint

December 7, 2001.

Take notice that on December 5, 2001, Nevada Power Company (NPC) filed a complaint requesting that the Commission mitigate unjust and unreasonable prices in sales contracts between NPC and BP Energy Company (BP) entered into in the first half of 2001 for delivery after January 1, 2002.

NPC requests that the Commission set a refund effective date of 60 days from the date of filing of their complaint.

Copies of NPC's filing were served on BP and the Public Utilities Commission of Nevada.

NPC has requested privileged treatment of certain information in the complaint, and has filed privileged and public copies of the complaint, a request for privileged treatment, and a protective agreement.

Any person desiring to be heard or to protest this filing should file a motion to intervene or protest with the Federal Energy Regulatory Commission, 888 First Street, NE., Washington, DC 20426, in accordance with Rules 211 and 214 of the Commission's rules of practice and procedure (18 CFR 385.211 and 385.214). All such motions or protests must be filed on or before December 26, 2001. Protests will be considered by the Commission in determining the appropriate action to be taken, but will not serve to make protestants parties to the proceeding. Any person wishing to become a party must file a motion to intervene. Answers to the complaint shall also be due on or before December 26, 2001. Copies of this filing are on file with the Commission and are available for public inspection. This filing may also be viewed on the Web at *http://www.ferc.gov* using the ''RIMS'' link, select ''Docket#'' and follow the instructions (call 202–208–2222 for assistance). Comments, protests and interventions may be filed electronically via the Internet in lieu of paper. See, 18 CFR 385.2001(a)(1)(iii) and the instructions on the Commission's Web site under the ''e-Filing'' link.

Linwood A. Watson, Jr.,

Acting Secretary.

[FR Doc. 01–30801 Filed 12–12–01; 8:45 am]

BILLING CODE 6717–01–P

DEPARTMENT OF ENERGY

Federal Energy Regulatory Commission

[Docket No. EL02–33–000]

Nevada Power Company and Sierra Pacific Power Company, Complainant v. El Paso Merchant Energy, L.P., Respondent; Notice of Complaint

December 7, 2001.

Take notice that on December 5, 2001, Nevada Power Company (NPC) and Sierra Pacific Power Company (SPPC) (collectively, the Nevada companies) filed a complaint requesting that the Federal Energy Regulatory Commission (Commission) mitigate unjust and unreasonable prices in sales contracts between NPC and El Paso Merchant Energy, L.P. (El Paso) and between SPPC and El Paso entered into in late 2000 and the first half of 2001 for delivery after January 1, 2002.

The Nevada companies request that the Commission set a refund effective date of 60 days from the date of filing of their complaint.

Copies of the Nevada companies' filing were served on El Paso and the Public Utilities Commission of Nevada. The Nevada companies have requested privileged treatment of certain information in the complaint, and have filed privileged and public copies of the complaint, a request for privileged treatment, and a protective agreement.

Any person desiring to be heard or to protest this filing should file a motion to intervene or protest with the Federal Energy Regulatory Commission, 888 First Street, NE., Washington, DC 20426, in accordance with Rules 211 and 214 of the Commission's rules of practice and procedure (18 CFR 385.211 and 385.214). All such motions or protests must be filed on or before December 26, 2001. Protests will be considered by the Commission in determining the appropriate action to be taken, but will not serve to make protestants parties to the proceeding. Any person wishing to become a party must file a motion to intervene. Answers to the complaint shall also be due on or before December 26, 2001. Copies of this filing are on file with the Commission and are available for public inspection. This filing may also be viewed on the Web at *http://*

www.ferc.gov using the ''RIMS'' link, select ''Docket#'' and follow the instructions (call 202–208–2222 for assistance). Comments, protests and interventions may be filed electronically via the Internet in lieu of paper. See, 18 CFR 385.2001(a)(1)(iii) and the instructions on the Commission's Web site under the ''e-Filing'' link.

Linwood A. Watson, Jr.,

Acting Secretary.

[FR Doc. 01–30800 Filed 12–12–01; 8:45 am]

BILLING CODE 6717–01–P

DEPARTMENT OF ENERGY

Federal Energy Regulatory Commission

[Docket No. EL02–38–000]

Nevada Power Company and Sierra Pacific Power Company, Complainants v. American Electric Power Services Corporation, Respondent; Notice of Complaint

December 7, 2001.

Take notice that on December 6, 2001, Nevada Power Company (NPC) and Sierra Pacific Power Company (SPPC) (collectively, the Nevada companies) filed a complaint requesting that the Commission mitigate unjust and unreasonable prices in sales contracts between NPC and American Electric Power Services Corporation (AEP) and between SPPC and AEP entered into in late 2000 and the first half of 2001 for delivery after January 1, 2002.

The Nevada companies request that the Commission set a refund effective date of 60 days from the date of filing of their complaint.

Copies of the Nevada companies' filing were served on AEP and the Public Utilities Commission of Nevada.

The Nevada Companies have requested privileged treatment of certain information in the complaint, and have filed privileged and public copies of the complaint, a request for privileged treatment, and a protective agreement.

Any person desiring to be heard or to protest this filing should file a motion to intervene or protest with the Federal Energy Regulatory Commission, 888 First Street, NE., Washington, DC 20426, in accordance with Rules 211 and 214 of the Commission's Rules of Practice and Procedure (18 CFR 385.211 and 385.214). All such motions or protests must be filed on or before December 26, 2001. Protests will be considered by the Commission in determining the appropriate action to be taken, but will not serve to make protestants parties to the proceeding. Any person wishing to become a party must file a motion to intervene. Answers to the complaint shall also be due on or before December 26, 2001. Copies of this filing are on file with the Commission and are available for public inspection. This filing may also be viewed on the Web at *http://www.ferc.gov* using the ''RIMS'' link, select ''Docket#'' and follow the instructions (call 202–208–2222 for assistance). Comments, protests and interventions may be filed electronically via the Internet in lieu of paper. See, 18 CFR 385.2001(a)(1)(iii) and the instructions on the Commission's Web site under the ''e-Filing'' link.

Linwood A. Watson, Jr.,

Acting Secretary.

[FR Doc. 01–30803 Filed 12–12–01; 8:45 am]

BILLING CODE 6717–01–P

DEPARTMENT OF ENERGY

Federal Energy Regulatory Commission

[Docket No. EL02–35–000]

Niagara Mohawk Power Corporation Operator Corporation, Complainant v. Rochester Gas & Electric Corporation, Respondent; Notice of Complaint

December 7, 2001.

Take notice that on December 6, 2001, Niagara Mohawk Power Corporation (Niagara Mohawk) filed with the Federal Energy Regulatory Commission (Commission) a Complaint against Rochester Gas & Electric Corporation., pursuant to section 206 of the Federal Power Act (FPA) 16 U.S.C. 824e (1194), and Rules 206 of the Commission's Rules of Practice and Procedure, 18 CFR 385.206. The Complaint states that Rochester Gas & Electric Corporation has breached a jurisdictional agreement between the parties entitled ''Exit Agreement'', dated June 8, 1998, and filed with the Commission in Docket No. ER99–3359.

Niagara Mohawk states that this filing has been served upon Rochester Gas & Electric Corporation and the New York Public Service Commission.

Any person desiring to be heard or to protest this filing should file a motion to intervene or protest with the Federal Energy Regulatory Commission, 888 First Street, NE., Washington, DC 20426, in accordance with Rules 211 and 214 of the Commission's Rules of Practice and Procedure (18 CFR 385.211 and 385.214). All such motions or protests must be filed on or before December 26, 2001. Protests will be considered by the Commission in determining the appropriate action to be taken, but will not serve to make protestants parties to the proceeding. Any person wishing to become a party must file a motion to intervene. Answers to the complaint shall also be due on or before December 26, 2001. Copies of this filing are on file with the Commission and are available for public inspection. This filing may also be viewed on the Web at *http://www.ferc.gov* using the ''RIMS'' link, select ''Docket#'' and follow the instructions (call 202–208–2222 for assistance). Comments, protests and interventions may be filed electronically via the Internet in lieu of paper. See, 18 CFR 385.2001(a)(1)(iii) and the instructions on the Commission's Web site under the ''e-Filing'' link.

Linwood A. Watson, Jr.,

Acting Secretary.

[FR Doc. 01–30802 Filed 12–12–01; 8:45 am]

BILLING CODE 6717–01–P

DEPARTMENT OF ENERGY

Federal Energy Regulatory Commission

[Docket No. EL02–37–000]

NSTAR Electric & Gas Corporation, Complainant v. ISO New England, Inc., and Parties to Market Rule 17, Section 17.3.2.2 (b) Agreements, Respondents; Notice of Complaint

December 7, 2001.

Take notice that on December 6, 2001, NSTAR Electric & Gas Corporation filed a Complaint against the ISO New England, Inc. and Parties to Section 17.3.2.2(b) Agreements seeking referrals of amounts collected in excess of filed rates since May of 1999.

Copies of said filing have been served upon NEPOOL Participants, the ISO New England, Inc., as well as upon the utility regulatory agencies of the six New England States.

Any person desiring to be heard or to protest this filing should file a motion to intervene or protest with the Federal Energy Regulatory Commission, 888 First Street, NE., Washington, DC 20426, in accordance with Rules 211 and 214 of the Commission's Rules of Practice and Procedure (18 CFR 385.211 and 385.214). All such motions or protests must be filed on or before December 26, 2001. Protests will be considered by the Commission in determining the appropriate action to be taken, but will not serve to make protestants parties to the proceeding. Any person wishing to become a party must file a motion to intervene. Answers to the complaint shall also be due on or before December 26, 2001. Copies of this filing are on file

with the Commission and are available for public inspection. This filing may also be viewed on the Web at *http://www.ferc.gov* using the ''RIMS'' link, select ''Docket#'' and follow the instructions (call 202–208–2222 for assistance). Comments, protests and interventions may be filed electronically via the Internet in lieu of paper. See, 18 CFR 385.2001(a)(1)(iii) and the instructions on the Commission's web site under the ''e-Filing'' link.

Linwood A. Watson, Jr.,

Acting Secretary.

[FR Doc. 01–30806 Filed 12–12–01; 8:45 am]

BILLING CODE 6717–01–P

DEPARTMENT OF ENERGY

Federal Energy Regulatory Commission

[Docket No. CP02–32–000]

Texas Eastern Transmission, LP; Notice of Application

December 7, 2001.

Take notice that on November 28, 2001, Texas Eastern Transmission, LP (Texas Eastern), 5400 Westheimer Court, Houston, Texas 77056–5310, filed in the captioned docket an application for a certificate of public convenience and necessity and related authorizations pursuant to section 7 of the Natural Gas Act (NGA), as amended, and the Commission's Rules and Regulations thereunder. Texas Eastern requests the following:

(i) A certificate of public convenience and necessity to construct, install, own, operate and maintain certain facilities, known as the Texas Eastern Incremental Market Expansion Project (TIME Project), necessary to provide 100,000 dekatherms per day (Dth/d) of firm natural gas transportation service to New Jersey Natural Gas Company (New Jersey Natural);

(ii) authorization to establish an initial NGA section 7(c) recourse rate using the incremental facilities proposed, as described in the application; and

(iii) other waivers, authorities, and relief as may be proper as appropriate to implement the proposal;

all as more thoroughly described in the application on file with the Commission and open to public inspection. This filing may be viewed on the web at *http://www.ferc.gov* using the ''RIMS'' link, select ''Docket#'' and follow the instructions (please call (202) 208–2222 for assistance).

Texas Eastern is requesting that the Commission issue a preliminary determination by March 13, 2002 and a final certificate by June 12, 2002 to enable Texas Eastern to meet New Jersey Natural's in-service date of November 1, 2002.

The name, address, and telephone number of the person to whom correspondence and communications concerning this Application should be addressed is: Steven E. Tillman, Director of Regulatory Affairs, Texas Eastern Transmission, LP, P.O. Box 1642, Houston, Texas 77251–1642, Phone: (713) 627–5113, Fax: (713) 627–5947.

Texas Eastern proposes to: (i) Construct, install, own, operate, and maintain a new 10,000 HP electric driven compressor unit at the existing Lambertville Compressor Station in Hunterdon County, New Jersey; (ii) construct, own, operate, and maintain four new segments of 36-inch diameter pipeline loops in Perry, Lebanon, Berks, and Bucks counties, Pennsylvania, totaling approximately 15.8 miles; (iii) perform compression uprates of 8,600 horsepower, from 13,400 to 22,000 horsepower, at each of two existing compressor stations, the Entriken in Huntingdon County, Pennsylvania, and the Armagh Indiana County, Pennsylvania; and (iv) upgrade the existing meter and regulation station M&R No. 70058 in Richmond County, New York, to accommodate the increased flow at this location.

Additionally, Texas Eastern seeks authorization to render the new firm transportation service pursuant to Texas Eastern's existing Firm Rate Schedule FT–1. Texas Eastern's proposed initial FT–1 recourse rate is an incremental reservation rate designed to recover all costs associated with the new facilities, estimated to be $75.2 Million. Texas Eastern states that Texas Eastern and New Jersey Natural have agreed to a negotiated rate for firm transportation service of up to 100,000 Dth/d under the FT–1 Service Agreement in accordance with the negotiated rate authority contained in section 29 of the General Terms and Conditions of Texas Eastern's FERC Gas Tariff.

There are two ways to become involved in the Commission's review of this project. First, any person wishing to obtain legal status by becoming a party to the proceedings for this project should, on or before December 28, 2001, file with the Federal Energy Regulatory Commission, 888 First Street, NE., Washington, DC 20426, a motion to intervene in accordance with the requirements of the Commission's rules of practice and procedure (18 CFR 385.214 or 385.211) and the Regulations under the NGA (18 CFR 157.10). A person obtaining party status will be placed on the service list maintained by the Secretary of the Commission and will receive copies of all documents filed by the applicant and by all other parties. A party must submit 14 copies of filings made with the Commission and must mail a copy to the applicant and to every other party in the proceeding. Only parties to the proceeding can ask for court review of Commission orders in the proceeding.

However, a person does not have to intervene in order to have comments considered. The second way to participate is by filing with the Secretary of the Commission, as soon as possible, an original and two copies of comments in support of or in opposition to this project. The Commission will consider these comments in determining the appropriate action to be taken, but the filing of a comment alone will not serve to make the filer a party to the proceeding. The Commission's rules require that persons filing comments in opposition to the project provide copies of their protests only to the party or parties directly involved in the protest.

Persons who wish to comment only on the environmental review of this project should submit an original and two copies of their comments to the Secretary of the Commission. Environmental commenters will be placed on the Commission's environmental mailing list, will receive copies of the environmental documents, and will be notified of meetings associated with the Commission's environmental review process. Environmental commenters will not be required to serve copies of filed documents on all other parties. However, the non-party commenters will not receive copies of all documents filed by other parties or issued by the Commission (except for the mailing of environmental documents issued by the Commission) and will not have the right to seek court review of the Commission's final order.

The Commission may issue a preliminary determination on non-environmental issues prior to the completion of its review of the environmental aspects of the project. This preliminary determination typically considers such issues as the need for the project and its economic effect on existing customers of the applicant, on other pipelines in the area, and on landowners and communities. For example, the Commission considers the extent to which the applicant may need to exercise eminent domain to obtain rights-of-way for the proposed project and balances that against the non-environmental benefits to be provided by the project. Therefore, if a person has comments on community

and landowner impacts from this proposal, it is important either to file comments or to intervene as early in the process as possible.

Comments, protests, and interventions may be filed electronically via the Internet in lieu of paper. See, 18 CFR 385.2001(a)(1)(iii) and the instructions on the Commission's Web site under the ''e-Filing'' link.

If the Commission decides to set the application for a formal hearing before an Administrative Law Judge, the Commission will issue another notice describing that process. At the end of the Commission's review process, a final Commission order approving or denying a certificate will be issued.

Linwood A. Watson, Jr.,

Acting Secretary.

[FR Doc. 01–30797 Filed 12–12–01; 8:45 am]

BILLING CODE 6717–01–P

DEPARTMENT OF ENERGY

Federal Energy Regulatory Commission

[Docket No. CP02–34–000]

Texas Gas Transmission Corporation; Notice of Application

December 7, 2001.

Take notice that on December 4, 2001, Texas Gas Transmission Corporation (Texas Gas), 3800 Frederica Street, Owensboro, Kentucky 42301, filed in Docket No. CP02–34–000, for: (1) an application pursuant to section 7(b) of the Natural Gas Act (NGA) for authorization to abandon, by sale to Stone Energy Corporation (Stone), certain supply lateral facilities and appurtenances, located in the East Cameron and Vermillion areas, offshore Louisiana and (2) a determination by the Commission, that upon approval of the abandonment by sale, Stone's ownership and operation of the subject supply lateral facilities will be exempt from Commission jurisdiction under the NGA, all as more fully set forth in the application which is on file with the Commission and open to public inspection. Copies of this filing are on file with the Commission and are available for public inspection. This filing may be viewed on the Web at *http://www.ferc.gov* using the ''RIMS'' link, select ''Docket #'' from the RIMS Menu and follow the instructions (call (202) 208–2222 for assistance).

Texas Gas states that it has entered into an agreement with Stone whereby Texas Gas will, upon Commission approval, transfer by sale to Stone, certain supply lateral facilities consisting of 6.94 miles of 12-inch diameter pipeline, measurement facilities, and appurtenances located in the East Cameron and Vermillion block areas, offshore Louisiana. Texas Gas declares that pursuant to an agreement dated March 23, 2001 and amended August 9, 2001, Texas Gas and Stone have mutually agreed, that subject to receipt of acceptable regulatory approvals, Texas Gas will sell to Stone all of Texas Gas' rights, title, and interests in the identified supply lateral facilities and appurtenances.

Texas Gas states that the agreement will terminate Texas Gas' interest in the subject facilities upon the date of closing, which will occur after receipt of acceptable regulatory approval. Texas Gas indicates that Stone will pay Texas Gas the sum of $100 for Texas Gas' interest (100%) in the facilities. Texas Gas declares that in recognition of the costs associated with any future retirement of these facilities by Stone, the agreement provides for Texas Gas to pay Stone actual and reasonable costs associated with the retirement up to $125,000.

Texas Gas indicates that the subject facilities are not contiguous to its mainline system, were originally constructed and operated to support its merchant function by connecting supplies in the East Cameron and Vermillion areas to the Tennessee Gas Pipeline Company system for ultimate delivery to Texas Gas' mainline system. Texas Gas asserts that due to the elimination of Texas Gas' merchant function and termination of third party transportation agreements, for delivery of the subject gas supplies to Texas Gas' mainline system, Texas Gas no longer has a firm transportation commitment involving the utilization of these facilities. Texas Gas avers that since these facilities are no longer integral to their role as an open-access transporter, abandonment of these facilities will enable Texas Gas to streamline its transmission operations.

Texas Gas states that abandonment by sale of these supply lateral facilities will not adversely affect any of Texas Gas' customers, since only interruptible service is provided through these facilities and Stone has indicated it will, upon transfer, provide non-jurisdictional service on a non-discriminatory basis.

Any questions regarding this amendment should be directed to David N. Roberts, Manager of Certificates and Tariffs, Texas Gas Transmission Corporation, PO Box 20008, Owensboro, Kentucky 42304, at (270) 688–6712.

There are two ways to become involved in the Commission's review of this project. First, any person wishing to obtain legal status by becoming a party to the proceedings for this project should, on or before December 17, 2001, file with the Federal Energy Regulatory Commission, 888 First Street, NE., Washington, DC 20426, a motion to intervene in accordance with the requirements of the Commission's rules of practice and procedure (18 CFR 385.214 or 385.211) and the Regulations under the NGA (18 CFR 157.10). A person obtaining party status will be placed on the service list maintained by the Secretary of the Commission and will receive copies of all documents filed by the applicant and by all other parties. A party must submit 14 copies of filings made with the Commission and must mail a copy to the applicant and to every other party in the proceeding. Only parties to the proceeding can ask for court review of Commission orders in the proceeding.

However, a person does not have to intervene in order to have comments considered. The second way to participate is by filing with the Secretary of the Commission, as soon as possible, an original and two copies of comments in support of or in opposition to this project. The Commission will consider these comments in determining the appropriate action to be taken, but the filing of a comment alone will not serve to make the filer a party to the proceeding. The Commission's rules require that persons filing comments in opposition to the project provide copies of their protests only to the party or parties directly involved in the protest.

Persons who wish to comment only on the environmental review of this project should submit an original and two copies of their comments to the Secretary of the Commission. Environmental commenters will be placed on the Commission's environmental mailing list, will receive copies of the environmental documents, and will be notified of meetings associated with the Commission's environmental review process. Environmental commenters will not be required to serve copies of filed documents on all other parties. However, the non-party commenters will not receive copies of all documents filed by other parties or issued by the Commission (except for the mailing of environmental documents issued by the Commission) and will not have the right to seek court review of the Commission's final order.

The Commission may issue a preliminary determination on non-environmental issues prior to the completion of its review of the

environmental aspects of the project. This preliminary determination typically considers such issues as the need for the project and its economic effect on existing customers of the applicant, on other pipelines in the area, and on landowners and communities. For example, the Commission considers the extent to which the applicant may need to exercise eminent domain to obtain rights-of-way for the proposed project and balances that against the non-environmental benefits to be provided by the project. Therefore, if a person has comments on community and landowner impacts from this proposal, it is important either to file comments or to intervene as early in the process as possible.

Comments, protests and interventions may be filed electronically via the Internet in lieu of paper. See, 18 CFR 385.2001(a)(1)(iii) and the instructions on the Commission's Web site under the ''e-Filing'' link.

If the Commission decides to set the application for a formal hearing before an Administrative Law Judge, the Commission will issue another notice describing that process. At the end of the Commission's review process, a final Commission order approving or denying a certificate will be issued.

Linwood A. Watson, Jr.,

Acting Secretary.

[FR Doc. 01–30798 Filed 12–12–01; 8:45 am]

BILLING CODE 6717–01–P

DEPARTMENT OF ENERGY

Federal Energy Regulatory Commission

[Docket No. CP02–37–000]

Williston Basin Interstate Pipeline Company; Notice of Application

December 7, 2001.

Take notice that on November 30, 2001, Williston Basin Interstate Pipeline Company (Williston Basin), 1250 West Century Avenue, Bismarck, North Dakota 58530, filed pursuant to sections 7(c) and 7(b) of the Natural Gas Act and the Commission's Regulations thereunder, an Abbreviated Application for a Certificate of Public and Necessity to construct and operate the Grasslands Pipeline Project, and for authority to abandon certain facilities, all as more fully set forth in the application which is on file with the Commission and open to public inspection. This filing may also be viewed on the web at *http://www.ferc.gov* using the ''RIMS'' link, select ''Docket#'' and follow the instructions (call 202–208–2222 for assistance).

Specifically, Williston Basin proposes to:

- Construct and operate approximately 219 miles of new 16-inch natural gas pipeline from Belle Creek, Montana to Dunn County, North Dakota and 28 miles of 16-inch looping along an existing 8-inch pipeline in Campbell County, Wyoming;
- Construct and operate three new 4,180 Horsepower compressor stations in Campbell County, Wyoming, Fallon County, Montana and Dunn County, North Dakota;
- Construct and operate one mile of 16-inch pipeline, and associated facilities, to interconnect with the facilities of Northern Border Pipeline Company in Dunn County, North Dakota;
- Construct and operate 0.9 miles of 12-inch lateral line in Fallon County, Montana;
- Construct and operate various metering and regulating facilities in Campbell County, Wyoming, Dunn County, North Dakota, and Fallon County, Montana;
- Uprate 40 miles of existing 8-inch supply line in Campbell County, Wyoming to a maximum allowable operating pressure of 1,440 psig, and to abandon and replace nine-existing underground road crossings as part of the uprating effort; and
- To construct and operate certain permanent and temporary miscellaneous facilities such as pig launcher/receiver sites, cathodic protection units, pipe yards, access roads and staging areas.

Williston Basin states that the proposed project will accomplish three objectives. Specifically, the project will provide: (1) An outlet for coal bed natural gas production in the Powder River Basin along with other conventional gas sources in Wyoming and Montana; (2) access to Williston Basin's storage facilities to shippers of gas produced in Powder River Basin; and (3) access from Williston Basin's storage facilities to the facilities of Northern Border Pipeline Company.

Williston Basin proposes an in-service date of November 1, 2002 and asks that the Commission authorize its proposal by August 21, 2002.

Any questions regarding the amendment should be directed to Keith A. Tiggelaar, Director, Regulatory Affairs, Williston Basin Interstate Pipeline Company, PO Box 5601, Bismarck, ND, 58506–5601, (701) 530–1560.

There are two ways to become involved in the Commission's review of this project. First, any person wishing to obtain legal status by becoming a party to the proceedings for this project should, on or before December 28, 2001, file with the Federal Energy Regulatory Commission, 888 First Street, NE., Washington, DC 20426, a motion to intervene in accordance with the requirements of the Commission's rules of practice and procedure (18 CFR 385.214 or 385.211) and the regulations under the NGA (18 CFR 157.10). A person obtaining party status will be placed on the service list maintained by the Secretary of the Commission and will receive copies of all documents filed by the applicant and by all other parties. A party must submit 14 copies of filings made with the Commission and must mail a copy to the applicant and to every other party in the proceeding. Only parties to the proceeding can ask for court review of Commission orders in the proceeding.

However, a person does not have to intervene in order to have comments considered. The second way to participate is by filing with the Secretary of the Commission, as soon as possible, an original and two copies of comments in support of or in opposition to this project. The Commission will consider these comments in determining the appropriate action to be taken, but the filing of a comment alone will not serve to make the filer a party to the proceeding. The Commission's rules require that persons filing comments in opposition to the project provide copies of their protests only to the party or parties directly involved in the protest.

Persons who wish to comment only on the environmental review of this project should submit an original and two copies of their comments to the Secretary of the Commission. Environmental commenters will be placed on the Commission's environmental mailing list, will receive copies of the environmental documents, and will be notified of meetings associated with the Commission's environmental review process. Environmental commenters will not be required to serve copies of filed documents on all other parties. However, the non-party commenters will not receive copies of all documents filed by other parties or issued by the Commission (except for the mailing of environmental documents issued by the Commission) and will not have the right to seek court review of the Commission's final order.

The Commission may issue a preliminary determination on non-environmental issues prior to the completion of its review of the

environmental aspects of the project. This preliminary determination typically considers such issues as the need for the project and its economic effect on existing customers of the applicant, on other pipelines in the area, and on landowners and communities. For example, the Commission considers the extent to which the applicant may need to exercise eminent domain to obtain rights-of-way for the proposed project and balances that against the non-environmental benefits to be provided by the project. Therefore, if a person has comments on community and landowner impacts from this proposal, it is important either to file comments or to intervene as early in the process as possible.

Comments, protests and interventions may be filed electronically via the Internet in lieu of paper. See, 18 CFR 385.2001(a)(1)(iii) and the instructions on the Commission's Web site under the ''e-Filing'' link.

If the Commission decides to set the application for a formal hearing before an Administrative Law Judge, the Commission will issue another notice describing that process. At the end of the Commission's review process, a final Commission order approving or denying a certificate will be issued.

Linwood A. Watson, Jr.,

Acting Secretary.

[FR Doc. 01–30799 Filed 12–12–01; 8:45 am]

BILLING CODE 6717–01–P

DEPARTMENT OF ENERGY

Federal Energy Regulatory Commission

[Docket Nos. CP01–176–000 and CP01–179–000]

Georgia Strait Crossing Pipeline LP; Notice of Availability of the Draft Environmental Impact Statement for the Proposed Georgia Strait Crossing Project

December 7, 2001.

The staff of the Federal Energy Regulatory Commission (FERC or Commission) has prepared a draft environmental impact statement (EIS) on natural gas pipeline facilities proposed by Georgia Strait Crossing Pipeline LP (GSX–US) in the above-referenced dockets.

The draft EIS was prepared to satisfy the requirements of the National Environmental Policy Act (NEPA). The staff concludes that approval of the proposed project, with appropriate mitigating measures as recommended, would have limited adverse environmental impact. The draft EIS also evaluates alternatives to the proposal, including system alternatives, route alternatives, and route variations.

The draft EIS addresses the potential environmental effects of the construction and operation of the following facilities in Whatcom and San Juan Counties, Washington:

- About 32.0 miles of 20-inch-diameter pipeline (onshore mainline pipeline) extending from the interconnect facilities at the international border between the United States and Canada near Sumas, Washington, across Whatcom County, to a new compressor station (Cherry Point Compressor Station) near Cherry Point, Washington;
- About 1.1 miles of 16-inch-diameter pipeline (onshore mainline pipeline) extending from the Cherry Point Compressor Station to the beginning of the marine portion of the pipeline at the edge of the Strait of Georgia;
- About 13.9 miles of 16-inch-diameter marine pipeline (offshore mainline pipeline) extending from the edge of the Strait of Georgia near Cherry Point, Washington to the international border between the United States and Canada at a point about midway between the west end of Patos Island (Washington) and the east end of Saturna Island (British Columbia) in Boundary Pass;
- Interconnect facilities including a receipt point meter station, pig launcher, interconnect piping, and associated valves (Sumas Interconnect Facility) adjacent to the existing Sumas Compressor Station in Whatcom County, Washington;
- A new compressor station (Cherry Point Compressor Station) consisting of one 10,302-hp two-stage compressor unit, pig launcher/receiver facilities, and associated valves near Cherry Point in Whatcom County, Washington;
- Six mainline valves (MLV), one each at the Sumas Interconnect Facility and Cherry Point Compressor Station and four valves along the proposed pipeline route; and
- An onshore and an offshore tap valve.

The purpose of the GSX–US project is to provide a natural gas transportation system to supply the growing demand for natural gas on Vancouver Island.

Comment Procedures and Public Meetings

Any person wishing to comment on the EIS may do so. To ensure consideration prior to a Commission decision on the proposal, it is important that we receive your comments before the date specified below. Please carefully follow these instructions to ensure that your comments are received in time and are properly recorded:

- Send an original and two copies of your comments to: Linwood A. Watson, Jr., Acting Secretary, Federal Energy Regulatory Commission, 888 First St., NE., Room 1A, Washington, DC 20426.
- Reference Docket Nos. CP01–176–000.
- Label one copy of your comments for the attention of Gas Group 2, PJ–11.2.
- Mail your comments so that they will be received in Washington, DC on or before February 4, 2002.

Comments may also be filed electronically via the Internet in lieu of paper. See 18 CFR 385.2001(a)(1)(iii) and the instructions on the Commission's Web site at *http://www.ferc.gov* under the ''e-Filing'' link and the link to the User's Guide. Before you can file comments you will need to create an account by clicking on ''Login to File'' and then ''New User Account.''

Due to current events, we cannot guarantee that we will receive mail on a timely basis from the U.S. Postal Service, and we do not know how long this situation will continue. However, we continue to receive filings from private mail delivery services, including messenger services in a reliable manner. The Commission encourages electronic filing of any comments on this draft EIS. We will include all comments that we receive within a reasonable time frame in our environmental analysis of this project.

We will announce in a future notice, the location and time of at least one local public meeting to receive comments on the draft EIS.

Interested groups and individuals are encouraged to attend and present oral comments on the environmental impacts described in the draft EIS. Transcripts of the meetings will be prepared.

After these comments are reviewed, any significant new issues are investigated, and modifications are made to the draft EIS as necessary, a final EIS will be published and distributed by the staff. The final EIS will contain the staff's responses to timely comments received on the draft EIS.

Comments will be considered by the Commission but will not serve to make the commentor a party to the proceeding. Any person seeking to become a party to the proceeding must file a motion to intervene pursuant to Rule 214 of the Commission's rules of practices and procedures (18 CFR 385.214).

Anyone may intervene in this proceeding based on this draft EIS. You must file your request to intervene as specified above.[1] You do not need intervenor status to have your comments considered.

The draft EIS has been placed in the public files of the FERC and is available for public inspection at: Federal Regulatory Energy Commission, Public Reference and Files Maintenance Branch, 888 First Street, NE., Room 2A, Washington, DC 20426, (202) 208–1371.

A limited number of copies of the draft EIS are available from the Public Reference and Files Maintenance Branch identified above. In addition, the draft EIS has been mailed to Federal, state, and local agencies, elected officials, public interest groups, individuals, and affected landowners who requested a copy of the draft EIS; public libraries; newspapers; and parties to this proceeding.

Additional information about the proposed project is available from the Commission's Office of External Affairs at (202) 208–1088 or on the FERC Web site (*www.ferc.gov*) using the ''RIMS'' link to information in the docket numbers. Click on the ''RIMS'' link, select ''Docket#'' from the RIMS menu, and follow the instructions. For assistance with access to RIMS, the RIMS helpline can be reached at (202) 208–2222.

Similarily, the ''CIPS'' link on the FERC internet website provides access to the texts of formal documents issued by the Commission, such as orders, notices, and rulemakings. From the FERC Internet Web site, click on the ''CIPS'' link, select ''Docket#'' from the CIPS menu, and follow the instructions. For assistance with access to CIPS, the CIPS helpline can be reached at (202) 208–2474.

Linwood A. Watson, Jr.,

Acting Secretary.

[FR Doc. 01–30796 Filed 12–12–01; 8:45 am]

BILLING CODE 6717–01–P

[1] Interventions may also be filed electronically via the Internet in lieu of paper. See the previous discussion on filing comments electronically.

DEPARTMENT OF ENERGY

Federal Energy Regulatory Commission

Notice of Applications Acceptance for Filing, Soliciting Motions To Intervene and Protests, Ready for Environmental Analysis, and Soliciting Comments, Recommendations, Terms and Conditions, and Prescriptions

December 7, 2001.

Take notice that the following hydroelectric applications have been filed with the Commission and are available for public inspection.

a. *Type of Applications:* Three new major licenses.

b. *Project Nos.:* 1982–017, 2567–009, and 2670–014.

c. *Date Filed:* June 21, 1996, June 22, 1998, and August 24, 1998, respectively.

d. *Applicant:* Northern States Power Company (NSP).

e. *Names of Projects:* Holcombe, Wissota, and Dells.

f. *Location:* On the Chippewa River in Chippewa, Rusk, and Eau Claire Counties, Wisconsin. The Holcombe and Wissota projects do not utilize any federal lands, but the Dells Project utilizes 6.6 acres of federal lands, administered by the U.S. Bureau of Land Management (BLM).

g. *Filed Pursuant to:* Federal Power Act, 16 U.S.C. 791(a)–825(r).

h. *Applicant Contact:* Mr. Lloyd Everhart, Northern States Power Company, 100 North Barstow Street, P.O. Box 8, Eau Claire, WI 54702–0008, 715–839–2692.

i. *FERC Contact:* Mark Pawlowski; *mark.pawlowski@ferc.fed.us,* 202–219–2795.

j. *Deadline for Filing Comments, Motions to Intervene, Recommendations, Terms and Conditions, and Prescriptions:* 60 days from the issuance date of this notice.

All documents (original and eight copies) should be filed with: Linwood A. Watson, Jr., Acting Secretary, Federal Energy Regulatory Commission, 888 First Street, NE., Washington, DC 20426. Comments, protests and interventions may be filed electronically via the Internet in lieu of paper. See, 18 CFR 385.2001(a)(1)(iii) and the instructions on the Commission's Web site under the ''e-Filing'' link.

The Commission's Rules of Practice and Procedure require all interveners filing documents with the Commission to serve a copy of that document on the official service list for the project. Further, if an intervener files comments or documents with the Commission relating to the merits of an issue that may affect the responsibilities of a particular resource agency, the intervener also must serve a copy of the document on that resource agency.

k. *Status of Environmental Analysis:* These applications have been accepted for filing and are ready for environmental analysis at this time.

l. Description of the Projects (from upstream to downstream):

The Holcombe Project consists of: (1) Four earthen embankments that include: The 700-foot-long North Dike and 200-foot-long South Dike, which are part of the Holcombe Dam; and the 4,600-foot-long Holcombe Dike and 1,900-foot-long Callahan Dike, which serve as flood control measures and are normally ''dry'' under normal operations; (2) an impoundment with a maximum surface area of 4,300 acres, a normal water surface elevation of 1045.0 feet NGVD, 46,000 acre-feet of gross storage, and 4,300 acre-feet of usable storage under normal operations; (3) a powerhouse containing 6 vertical propeller-type turbine-generating units with a total installed capacity of 33,000 kW; (4) a 462-foot-long reinforced and mass concrete spillway equipped with 13, 30-foot-wide steel tainter gates; (5) an outdoor substation that directly connects to the NSP systemwide transmission network; and (6) appurtenant facilities. The average annual energy production is 94,021,000 kWh.

The Wissota Project consists of: (1) Six earthen embankments totaling about 7,300 feet long, and a 165-foot-long gravity dam; (2) a 904-foot-long concrete overflow spillway with 13 Stauwerke flap gates, each 64 feet wide by 10.5 feet high; (3) a 6,212-acre reservoir with a normal surface elevation of 897.1 feet NGVD, and a gross storage capacity of 162,971 acre-feet; (4) a powerhouse containing 6 vertical Francis turbine-generator units for a total installed capacity of 36,000 kW; (4) an outdoor substation that directly connects to the NSP systemwide transmission network; and (5) appurtenant facilities. The average annual energy generation is 149,392,471 kWh.

The Dells Project consists of: (1) A 396-foot-long concrete gated spillway dam with 13 Tainter gates; (2) an impoundment with a maximum surface area of 1,183 acres, a normal water surface elevation of 794.4 feet NGVD, 11,158 acre-feet of gross storage, and 2,000 acre-feet of usable storage under normal operations; (3) powerhouse A containing 5 turbine-generator units with a total installed capacity of 8,400 kW; (3) powerhouse B containing 2 turbine-generators with a total installed capacity of 1,100 kW; (4) a 1,884-foot-

long transmission line; and (5) appurtenant facilities. The average annual energy production is 48,029,165 kWh.

The three Chippewa River projects are operated in close coordination with other Chippewa River hydroelectric projects owned by NSP, primarily in a peaking mode, where the projects are operated fully during the day, and shut down at night for reservoir refill. The three project reservoirs typically operate within a 1 to 2-foot drawdown range. NSP dispatch centers in Minneapolis and Eau Claire coordinate operations, depending on system electrical demand, availability of water (river flow), and costs of energy over the next 24 hours. Hydropower operations are planned one day in advance, with the objective to produce as much energy as possible during the peak electrical demand periods of the day.

As a result of negotiations among NSP, state and federal resource agencies, and non-governmental organizations (NGOs), the Lower Chippewa River Settlement Agreement (LCRSA) was filed with the Commission on February 1, 2001.[1] This agreement, which represents the resolution of all major issues related to the relicensing of the three Chippewa River projects, includes operational and other measures for protection and enhancement of environmental resources at the three projects proposed for relicensing, as well as at three other Chippewa River hydroelectric projects. These other projects include: The Cornell Project (FERC No. 2639–009), Jim Falls Project (FERC No. 2491–025, and Chippewa Falls Project (FERC No. 2440–040). Applications for amendment of license to implement the proposed operational changes at these projects were filed on February 1, 2001.[2] Our environmental analysis will include an assessment of the proposed environmental protection and enhancement measures at all six Chippewa River projects.

m. Locations of the Applications: Copies of each of the three applications are available for inspection and reproduction at the Commission's Public Reference Room, located at 888 First Street, NE., Room 2A, Washington, DC 20246, or by calling (202) 208–1371. Copies of this filing are on file with the Commission and are available for public inspection. This filing may also be viewed on the Web at *http://www.ferc.gov* using the ''RIMS'' link, select ''Docket#'' and follow the instructions (call 202–208–2222 for assistance). Copies also are available for inspection and reproduction at the address in item h, above.

n. Filing and Service of Responsive Documents: The Commission directs, pursuant to Section 4.34(b) of the Regulations (see Order No. 533 issued May 8, 1991, 56 FR 23108, May 20, 1991) that all comments, recommendations, terms and conditions, and prescriptions concerning the applications be filed with the Commission within 60 days from the issuance date of this notice. All reply comments must be filed with the Commission within 105 days from the date of this notice. Comments, protests and interventions may be filed electronically via the Internet in lieu of paper. See, 18 CFR 385.2001(a)(1)(iii) and the instructions on the Commission's Web site under the ''e-Filing'' link.

Anyone may obtain an extension of time for these deadlines from the Commission only upon a showing of good cause or extraordinary circumstances in accordance with 18 CFR 385.2008.

All filings must: (1) Bear in all capital letters the title ''COMMENTS'', ''REPLY COMMENTS'', ''RECOMMENDATIONS,'' ''TERMS AND CONDITIONS,'' or ''PRESCRIPTIONS;'' (2) set forth in the heading the name of the applicant and the project number(s) of the application to which the filing responds; (3) furnish the name, address, and telephone number of the person submitting the filing; and (4) otherwise comply with the requirements of 18 CFR 385.2001 through 385.2005. All comments, recommendations, terms and conditions or prescriptions must set forth their evidentiary basis and otherwise comply with the requirements of 18 CFR 4.34(b). Agencies may obtain copies of the application directly from the applicant. Each filing must be accompanied by proof of service on all persons listed on the service list prepared by the Commission in this proceeding, in accordance with 18 CFR 4.34(b), and 385.2010.

Linwood A. Watson, Jr.,

Acting Secretary.

[FR Doc. 01–30805 Filed 12–12–01; 8:45 am]

BILLING CODE 6717–01–P

[1] This filing was noticed by the Commission on February 14, 2001.

[2] These filings were also noticed by the Commission on February 14, 2001.

DEPARTMENT OF ENERGY

Federal Energy Regulatory Commission

[Docket No. RM98–1–000]

Regulations Governing Off-the-Record Communications; Public Notice

December 7, 2001.

This constitutes notice, in accordance with 18 CFR 385.2201(h), of the receipt of exempt and prohibited off-the-record communications.

Order No. 607 (64 FR 51222, September 22, 1999) requires Commission decisional employees, who make or receive an exempt or a prohibited off-the-record communication relevant to the merits of a contested on-the-record proceeding, to deliver a copy of the communication, if written, or a summary of the substance of any oral communication, to the Secretary.

Prohibited communications will be included in a public, non-decisional file associated with, but not part of, the decisional record of the proceeding. Unless the Commission determines that the prohibited communication and any responses thereto should become part of the decisional record, the prohibited off-the-record communication will not be considered by the Commission in reaching its decision. Parties to a proceeding may seek the opportunity to respond to any facts or contentions made in a prohibited off-the-record communication, and may request that the Commission place the prohibited communication and responses thereto in the decisional record. The Commission will grant such requests only when it determines that fairness so requires. Any person identified below as having made a prohibited off-the-record communication should serve the document on all parties listed on the official service list for the applicable proceeding in accordance with Rule 2010, 18 CFR 385.2010.

Exempt off-the-record communications will be included in the decisional record of the proceeding, unless the communication was with a cooperating agency as described by 40 CFR 1501.6, made under 18 CFR 385.2201(e)(1)(v).

The following is a list of exempt and prohibited off-the-record communications received in the Office of the Secretary within the preceding 14 days. Copies of this filing are on file with the Commission and are available for public inspection. The documents may be viewed on the Web at *http://www.ferc.gov* using the ''RIMS'' link, select ''Docket#'' and follow the

instructions (call 202–208–2222 for assistance).

Exempt

1. Project No. 2342—12–5–01—Nicholas Jayjack
2. Project Nos. 1932–004, and 1934–010—12–5–01—Gene Zimmerman
3. Docket No. CP98–150–000, *et al.* 12–3–01—Richard E. Hall, Jr.
4. Docket No. CP02–11–000—12–4–01—Alisa Lykens
5. Project No. 2042—12–4–01—Tim Bachelder
6. Docket No. CP01–361–000—12–3–01—Susan Smillie
7. Project No. 2661—12–3–01—Carol Gleichman
8. Project No. 2016—12–3–01—Carol Gleichman
9. Project No. 1354—12–3–01—Van Button
10. Project No.1354—12–3–01—Van Button
11. Docket No. CP01–361–000—12–3–01—Susan Smillie
12. Project No. 1354—12–3–01—Dixie Jackson

Prohibited

1. Docket Nos. ER96–2945–015—11–29–01—Morris Schreim
   ER97–4143–003
   ER97–1238–010
   ER98–2075–009
   ER98–542–005
   ER91–569–009
   ER97–4166–008

Linwood A. Watson, Jr.,

Acting Secretary.

[FR Doc. 01–30804 Filed 12–12–01; 8:45 am]

BILLING CODE 6717–01–P

FEDERAL DEPOSIT INSURANCE CORPORATION

Notice of Agency Meeting

Pursuant to the provisions of the ''Government in the Sunshine Act'' (5 U.S.C. 552b), notice is hereby given that at 10:24 a.m. on Monday, December 10, 2001, the Board of Directors of the Federal Deposit Insurance Corporation met in closed session to consider matters relating to the Corporation's corporate, supervisory, and resolution activities.

In calling the meeting, the Board determined, a motion of Director John M. Reich (Appointive), seconded by Director James E. Gilleran (Director, Office of Thrift Supervision), concurred in by Director John D. Hawke, Jr. (Comptroller of the Currency), and Chairman Donald E. Powell, that Corporation business required its consideration of the matters on less than seven days' notice to the public; that no earlier notice of the meeting was practicable; that the public interest did not require consideration of the matters in a meeting open to public observation; and that the matters could be considered in a closed meeting by authority of subsections (c)(2), (c)(4), (c)(6), (c)(8), (c)(9)(A)(ii), (c)(9)(B), and (c)(10) of the ''Government in the Sunshine Act'' (5 U.S.C. 552b(c)(2), (c)(4), (c)(6), (c)(8), (c)(9)(A)(ii), (c)(9)(B), and (c)(10)).

The meeting was held in the Board Room of the FDIC Building located at 550–17th Street, NW., Washington, DC.

Dated: December 11, 2001.

Federal Deposit Insurance Corporation.

James D. LaPierre,

Deputy Executive Secretary.

[FR Doc. 01–30909 Filed 12–11–01; 12:51 pm]

BILLING CODE 6714–01–M

FEDERAL DEPOSIT INSURANCE CORPORATION

Notice of Change in Time of Agency Meeting

Pursuant to the provisions of the ''Government in the Sunshine Act'' (5 U.S.C. 552b), notice is hereby given that the previously announced meeting of the Board of Directors scheduled to be held on Monday, December 10, 2001, at 2 p.m. (open session) has been *rescheduled* for 10 a.m. that same day.

No earlier notice of the change in time of this meeting was practicable.

Dated: December 7, 2001.

Federal Deposit Insurance Corporation.

James D. LaPierre,

Deputy Executive Secretary.

[FR Doc. 01–30925 Filed 12–11–01; 2:15 pm]

BILLING CODE 6714–01–M

FEDERAL EMERGENCY MANAGEMENT AGENCY

Draft Guidance for the Use of Portable (Hand-Held) Radiological Instruments

AGENCY: Federal Emergency Management Agency (FEMA).

ACTION: Notice of draft guidance.

SUMMARY: We (FEMA) [1] have developed draft guidance for the use of portable (hand-held) radiological instruments for the detection of radioactive contamination on persons in association with peacetime nuclear accidents. Three draft documents pertaining to the draft guidance are available for distribution, review and comment.

DATES: We invite comments on the draft guidance, which we should receive on or before February 11, 2002.

ADDRESSES: You may obtain copies of the draft guidance documents from William F. McNutt, Federal Emergency Management Agency, 500 C Street, SW., Washington, DC 20472, (202) 646–2857, or (e-mail) *william.mcnutt@fema.gov.*

Please send any comments on the draft guidance to the Rules Docket Clerk, Office of the General Counsel, Federal Emergency Management Agency, 500 C Street, SW., Washington, DC 20472, or (e-mail) *rules@fema.gov.*

FOR FURTHER INFORMATION CONTACT: Vernon L. Wingert, Federal Emergency Management Agency, 500 C Street, SW., Washington, DC 20472, (202) 646–2872.

SUPPLEMENTARY INFORMATION: The three draft guidance documents are: (a) *Contamination Monitoring Guidance for Portable Instruments Used for Radiological Emergency Response* (10 pages); (b) *Background Information on Contamination Monitoring Guidance for Portable Instruments Used for Radiological Emergency Response* (55 pages); and (c) *Statements of Consideration for Contamination Monitoring Guidance for Portable Instruments Used for Radiological Emergency Response* (7 pages).

We developed this guidance in response to a request from the Conference of Radiation Control Program Directors (CRCPD). The CRCPD asked us to develop guidance for portable instruments that afford protection to the public equivalent to the portal monitor standard that we established and published in the **Federal Register**, 60 FR 15290–15291, March 23, 1995.

We worked through the Federal Radiological Preparedness Coordinating Committee (FRPCC) and its Offsite Emergency Instrumentation Subcommittee to develop and coordinate the portal monitor standard and the guidance for portable instruments. We chair the FRPCC and with the Nuclear Regulatory Commission (NRC) co-chair the Offsite Emergency Instrumentation Subcommittee, which includes members from several Federal agencies. Members of the CRCPD's E–6 Committee (composed of State radiological health officials) participate in meetings of this Subcommittee as ex-officio members. We also made the draft guidance available to FEMA Regional staff and CRCPD constituents in all 50 States for review and comment. We

[1] The terms ''we'' and ''us'' in this notice mean FEMA.

have addressed and resolved their comments.

While we developed only one standard for portal monitors, we developed guidance for four (4) types of portable instruments because of the instrument-specific factors that influence the manner in which radiation is detected and measured. We developed the guidance for portable instruments through extensive empirical tests of different portable radiological instruments currently in use today by State and government personnel. Despite instrument-specific differences between portal monitors and portable instruments, use of the draft guidance will afford protection to individuals equivalent to that afforded by the portal monitor standard.

Based on extensive consultation with Federal and State officials, the primary issue involving this guidance is the extended period of time required to monitor an individual adequately with some types of portable radiological instruments. The planning criterion set forth in this document for monitoring individuals using a portable CDV–700 radiological instrument is 300 counts per minute (CPM) above background levels. Empirical studies undertaken since 1991 have substantiated per-person monitoring time frames for different types of radiological instruments ranging from 2.6 minutes to as high as 19 minutes (for a CDV–700 with standard GM side window probe) for total body scans to detect spot contamination.

The range of times required to monitor individuals, coupled with the need of State and local governments to provide sufficient resources to monitor at least 20% of the plume exposure pathway emergency planning zone (EPZ) population, may require State and local governments with certain types of radiological instruments to re-examine their radiological emergency planning and preparedness for accidents involving commercial nuclear power plants. This issue is extensively documented and addressed in the three documents previously cited, and we provide suggestions on how State and local governments may address this issue and related resource requirements.

We welcome comments on the monitoring issue, related resource requirements, and any other issues raised by the draft guidance.

Dated: December 7, 2001.

Joe M. Allbaugh,

Director.

[FR Doc. 01–30824 Filed 12–12–01; 8:45 am]

BILLING CODE 6718–02–P

FEDERAL MARITIME COMMISSION

Notice of Agreement(s) Filed

The Commission hereby gives notice of the filing of the following agreement(s) under the Shipping Act of 1984. Interested parties can review or obtain copies of agreements at the Washington, DC offices of the Commission, 800 North Capitol Street, NW., Room 940. Interested parties may submit comments on an agreement to the Secretary, Federal Maritime Commission, Washington, DC 20573, within 10 days of the date this notice appears in the **Federal Register**.

Agreement No.: 011548–005.

Title: Hanjin/Sinolines Cross Space Charter & Sailing Agreement.

Parties: Hanjin Shipping Co., Ltd. Sinotrans Container Lines Co. Ltd.

Synopsis: The proposed modification substitutes Sinotrans Container Lines Co., Ltd., trading as Sinolines, for China National Foreign Trade Transportation Corporation as a party to the agreement.

Agreement No.: 011746–001.

Title: COSCON/KL/YMUK Asia/U.S. Pacific Coast Slot Allocation Agreement.

Parties: COSCO Container Lines Company, Ltd. Kawasaki Kisen Kaisha, Ltd. Yangming (UK) Ltd.

Synopsis: The proposed modification adds a new vessel string in the agreement trade on which the parties may share space. The parties request expedited review.

By Order of the Federal Maritime Commission.

Dated: December 7, 2001.

Theodore A. Zook,

Assistant Secretary.

[FR Doc. 01–30768 Filed 12–12–01; 8:45 am]

BILLING CODE 6730–01–P

FEDERAL MARITIME COMMISSION

Ocean Transportation Intermediary License Applicants

Notice is hereby given that the following applicants have filed with the Federal Maritime Commission an application for license as Non-Vessel Operating Common Carrier and Ocean Freight Forwarder—Ocean Transportation Intermediary pursuant to section 19 of the Shipping Act of 1984 as amended (46 U.S.C. app. 1718 and 46 CFR 515).

Persons knowing of any reason why the following applicant should not receive a license are requested to contact the Office of Transportation Intermediaries, Federal Maritime Commission, Washington, DC 20573.

Non-Vessel Operating Common Carrier Ocean Transportation Intermediary Applicants

Global Kwon Yoon, 1212 W. Gardena Blvd., #D, Gardena, CA 90247, Deuk Kwon Yoon, Sole Proprietor

Cosa Freight, Inc., 17800 Castleton Street, #695, City of Industry, CA 90740, Officers: Xia Zhang, Vice President (Qualifying Individual), James Zhang, President

Navetrans Corp. dba Costa Rica Carriers, 240 Crandon Blvd., Suite 203 A, Miami, FL 33149, Officers: Sahir Miguel Morales, Asst. Vice President (Qualifying Individual), Joachim Haubold, President

North Star Express, Inc., 2252 Beverly Blvd., Suite 204, Los Angeles, CA 90057, Officers: Leonardo B. Lucena, Marketing Director (Qualifying Individual), Eleuterio Gagar, President

A.S.L. Shipping Lines Inc. dba American Shipping Line, 2 East Valley Blvd., Suite 200 B, Alhambra, CA 91801, Officer: Michael Duong, President (Qualifying Individual)

Cargo Control Express, Inc. dba Ramses Logistics Co., 2782 Engel Drive, Los Alamitos, CA 90702, Officer: Christine Kim, President (Qualifying Individual)

AE Eagle America Inc., 155–04 145th Avenue, Jamaica, NY 11434, Officers: Davy NG, Secretary (Qualifying Individual), Milton Cheung, President

Cargozone Trans Corporation, 19550 Dominguez Hills Dr., Rancho Dominguez, CA 90220, Officers: Paul M. Kim, Secretary (Qualifying Individual), Byung Keun Han, President

North American Container Group, 6600 N. Lincoln Ave., Suite 3066, Lincolnwood, IL 60712, Mark M. Marcus, Sole Proprietor

Datacargo Co. Inc. dba Datacargo, 8235 N.W. 82nd Avenue, Miami, FL 33166, Officers: Luis Andres Sara, General Manager (Qualifying Individual), Maria Elena Gomez Ruggiero, Vice President

Alcon Express Corp., 179–30 149th Ave. Suite 105, Jamaica, NY 11434, Officers: Connie Jiang, Vice President (Qualifying Individual), Alan C. Wang, President

Allison Shipping International, Inc., 3906 Walnut Avenue, Long Beach, CA 90807, Officers: Donna B. Betts, CEO (Qualifying Individual), Rita R. Sehwani, Secretary

Awell Logistics Group, Inc., 2675C McCone Avenue, Hayward, CA 94545, Officers: Jack Huie, Vice President (Qualifying Individual), Shing Lan Hon, CEO

WP Logistics Inc., 1730 Park Lawn Road, Hacienda Heights, CA 91745,

Officers: Joey Tam, Secretary (Qualifying Individual), Danny Tam, Vice President

Deltamax Freight System, Inc., 880 Lively Blvd., Elk Grove Village, IL 60007, Officers: Tien-Yu Wu, President (Qualifying Individual), Elise Wu, Secretary

Ireh Logistic Services Inc., 500 Carson Plaza Dr., Suite 202, Carson, CA 90746, Officer: Sunny Kang, CEO (Qualifying Individual)

ISI Express (N.Y.) Inc., 177–25 Rockaway Blvd., 207, Jamaica, NY 11434, Officers: Chia Yu Lee (Charlie) (Qualifying Individual), Stephen Fu, President

J C Trans (USA), Inc., 139 Mitchell Ave., Suite 223, South San Francisco, CA 94080, Officers: Tom Fan, Vice President (Qualifying Individual), Chung-Kwai Wan, President

KL Logistics Corp., 23509 Himber Place, Harbor City, CA 90710, Officer: Kenny Lee, CEO (Qualifying Individual)

Quality Express, Inc., 9620 S. La Cienega Blvd., Inglewood, CA 90301, Officers: Yukio Nakano, Vice President (Qualifying Individual), Joseph Cheng-Meng Lam, President

Star Airfreight Co., Ltd., 149–35 177th Street, 2/Fl., Jamaica, NY 11434, Officers: Anthony Chan, President (Qualifying Individual), Eddie T.C. Yau, Chairman/CEO

Peacock Group, Inc., 323 Claremont Street, Buchanan, MI 49107, Officer: David R. Gault, Chairman/President (Qualifying Individual)

Yurram Corp. dba Starliner Shipping & Travel, 5305 Church Avenue, Brooklyn, NY 11203, Officers: Nigel L. Murray, President (Qualifying Individual), Rhea Murray, Secretary

Bondex Air & Sea Logistic, Inc., 731 S. Garfield Avenue, 2nd Floor, Alhambra, CA 91801, Officers: Scott S.F. Wang, President (Qualifying Individual), Eva Chen, Vice President

Ecuamerica International, Inc., 5401-D Southern Comfort Blvd., Tampa, FL 33634, Michael De La Llana, President (Qualifying Individual), Susana Elvia De La Llana, Vice President

SeaMac Shipping Inc., 215 East Bay Street, Suite 201–I, Charleston, SC 29401, Officers: John Laban Sease, Vice President (Qualifying Individual), Thomas McInerney, President

Gateways International, Inc., 2030 First Avenue, Suite 200, Seattle, WA 98121–2112, Officers: Richard W. Curry, President (Qualifying Individual), George W. Pasha, IV, Vice President

Fredonia, Inc. dba Fredonia Cargo Lines, 478 Pennsylvania Ave., #301, Glen Ellyn, IL 60137, Officers: Frank Hollesen, President (Qualifying Individual), Kathy Hollesen, Treasury/Vice President

Non-Vessel Operating Common Carrier and Ocean Freight Forwarder Transportation Intermediary Applicants

Delex, Inc., 1326 McDonald Avenue, Brooklyn, NY 10033, Officer: Oleg Ardashev, President (Qualifying Individual)

Summit Cargo Group, Inc., 724 South Hindry Avenue, Inglewood, CA 90301, Officers: Tony Feist, Dir. of Operations (Qualifying Individual), Zachary Zemby, President

Kuhn Hay, Inc., 1625 Drew Road, El Centro, CA 92243, Officers: James E. Kuhn, President (Qualifying Individual), John Robert Kuhn, Director

Top Cargo Inc., 3537 NW 82nd Avenue, Miami, FL 33122, Officer: Damian J. Pelegrino, President (Qualifying Individual)

Sun Express International, Inc. dba BNX Shipping, Hawaii, 1188 Bishop Street, #1006, Honolulu, HI 96813, Officer: Sun Hee Lee, President (Qualifying Individual)

Dispatch Services Logistics Company, Inc., 479 West Sixth Street, Suite #203, San Pedro, CA 90731, Officers: Lee Phillip Meister, President (Qualifying Individual), Rose Fletcher, Secretary

EgeTrans USA, Inc., EgeTrans Atlantic Service, 729 North Route 83, Suite 304, Bensenville, IL 60106, Officers: Sandra L. Pattison, Vice President (Qualifying Individual), Peter Steinmuller, Dir./President

Nakamura Air Express (USA), Inc., 9432 Bellanca Ave., Suite 210, Los Angeles, CA 90045, Officers: Myungsil Yoo Francis, Corporate Secretary (Qualifying Individual)

Transunion America Inc., 66–00 Long Island Expressway, Suite 200, Maspeth, NY 11378, Officers: Geri S. Alex, Vice President (Qualifying Individual), Jose Viano, President

American Links Logistics International, Inc., 3591 Highland Drive, San Bruno, CA 94066, Officers: Letty Batacan, Import Manager (Qualifying Individual), Walfredo M. Enrico, President

Dated: December 7, 2001.

Theodore A. Zook,

Assistant Secretary.

[FR Doc. 01–30769 Filed 12–12–01; 8:45 am]

BILLING CODE 6730–01–P

FEDERAL RESERVE SYSTEM

Change in Bank Control Notices; Acquisition of Shares of Bank or Bank Holding Companies

The notificants listed below have applied under the Change in Bank Control Act (12 U.S.C. 1817(j)) and § 225.41 of the Board's Regulation Y (12 CFR 225.41) to acquire a bank or bank holding company. The factors that are considered in acting on the notices are set forth in paragraph 7 of the Act (12 U.S.C. 1817(j)(7)).

The notices are available for immediate inspection at the Federal Reserve Bank indicated. The notices also will be available for inspection at the office of the Board of Governors. Interested persons may express their views in writing to the Reserve Bank indicated for that notice or to the offices of the Board of Governors. Comments must be received not later than December 27, 2001.

A. Federal Reserve Bank of Kansas City (Susan Zubradt, Assistant Vice President) 925 Grand Avenue, Kansas City, Missouri 64198–0001:

1. Joseph D. Freund Irrevocable Trust No. 2, the Duane M. Freund Irrevocable Trust No. 2, the Kenneth J. Freund Irrevocable Trust No. 2, and the Michael R. Freund Irrevocable Trust No. 2, all of Aurora, Colorado, and the following individuals who serve as co-trustees of one or more of the trusts: Joseph Freund, Jr., Elizabeth, Colorado, James Campbell, Denver, Colorado, Laura Freund Buddington, Denver, Colorado, Scott Freund, Elizabeth, Colorado, Phillip Pasion, Parker, Colorado, Angela Freund Bennett, Denver, Colorado, and Kenneth Freund, Jr, Aurora, Colorado, to retain voting shares of Commerce Bankshares, Inc., Aurora, Colorado, and thereby indirectly retain voting shares of Commerce Bank, Aurora, Colorado.

Board of Governors of the Federal Reserve System, December 7, 2001.

Robert deV. Frierson,

Deputy Secretary of the Board.

[FR Doc. 01–30783 Filed 12–12–01; 8:45 am]

BILLING CODE 6210–01–S

FEDERAL RESERVE SYSTEM

Formations of, Acquisitions by, and Mergers of Bank Holding Companies

The companies listed in this notice have applied to the Board for approval, pursuant to the Bank Holding Company Act of 1956 (12 U.S.C. 1841 *et seq.*) (BHC Act), Regulation Y (12 CFR Part 225), and all other applicable statutes and regulations to become a bank

holding company and/or to acquire the assets or the ownership of, control of, or the power to vote shares of a bank or bank holding company and all of the banks and nonbanking companies owned by the bank holding company, including the companies listed below.

The applications listed below, as well as other related filings required by the Board, are available for immediate inspection at the Federal Reserve Bank indicated. The application also will be available for inspection at the offices of the Board of Governors. Interested persons may express their views in writing on the standards enumerated in the BHC Act (12 U.S.C. 1842(c)). If the proposal also involves the acquisition of a nonbanking company, the review also includes whether the acquisition of the nonbanking company complies with the standards in section 4 of the BHC Act (12 U.S.C. 1843). Unless otherwise noted, nonbanking activities will be conducted throughout the United States. Additional information on all bank holding companies may be obtained from the National Information Center website at www.ffiec.gov/nic/.

Unless otherwise noted, comments regarding each of these applications must be received at the Reserve Bank indicated or the offices of the Board of Governors not later than January 7, 2002.

A. Federal Reserve Bank of San Francisco (Maria Villanueva, Consumer Regulation Group) 101 Market Street, San Francisco, California 94105–1579:

1. CBA Bancshares, Inc., Minneapolis, Minnesota; to become a bank holding company by acquiring 100 percent of the voting shares of Community Bank of Arizona, Wickenburg, Arizona.

Board of Governors of the Federal Reserve System, December 7, 2001.

Robert deV. Frierson,

Deputy Secretary of the Board.

[FR Doc. 01–30782 Filed 12–12–01; 8:45 am]

BILLING CODE 6210–01–S

FEDERAL RESERVE SYSTEM

Notice of Proposals to Engage in Permissible Nonbanking Activities or to Acquire Companies that are Engaged in Permissible Nonbanking Activities

The companies listed in this notice have given notice under section 4 of the Bank Holding Company Act (12 U.S.C. 1843) (BHC Act) and Regulation Y (12 CFR Part 225) to engage *de novo*, or to acquire or control voting securities or assets of a company, including the companies listed below, that engages either directly or through a subsidiary or other company, in a nonbanking activity that is listed in § 225.28 of Regulation Y (12 CFR 225.28) or that the Board has determined by Order to be closely related to banking and permissible for bank holding companies. Unless otherwise noted, these activities will be conducted throughout the United States.

Each notice is available for inspection at the Federal Reserve Bank indicated. The notice also will be available for inspection at the offices of the Board of Governors. Interested persons may express their views in writing on the question whether the proposal complies with the standards of section 4 of the BHC Act. Additional information on all bank holding companies may be obtained from the National Information Center website at www.ffiec.gov/nic/.

Unless otherwise noted, comments regarding the applications must be received at the Reserve Bank indicated or the offices of the Board of Governors not later than December 27, 2001.

A. Federal Reserve Bank of Minneapolis (JoAnne F. Lewellen, Assistant Vice President) 90 Hennepin Avenue, Minneapolis, Minnesota 55480–0291:

1. Provincial Corp., Lakeville, Minnesota; to engage *de novo*, through AmericEd Financial Services, LLC, Lakeville, Minnesota, in the origination and sale of government guaranteed student loans, pursuant to § 225.28(b)(1) of Regulation Y.

Board of Governors of the Federal Reserve System, December 7, 2001.

Robert deV. Frierson,

Deputy Secretary of the Board.

[FR Doc. 01–30784 Filed 12–12–01; 8:45 am]

BILLING CODE 6210–01–S

FEDERAL RESERVE SYSTEM

[Docket Nos. R–1107, R–1108, R–1109, and R–1110]

Policy Statement on Payments System Risk

AGENCY: Board of Governors of the Federal Reserve System.

ACTION: Policy statement.

SUMMARY: The Board has revised its Policy Statement on Payments System Risk (PSR policy) to modify the net debit cap calculation for U.S. branches and agencies of foreign banks, to modify the time electronic check presentments are posted to depository institutions' Federal Reserve accounts for purposes of measuring daylight overdrafts, and to incorporate, with minor modifications, its interim policy that allows certain depository institutions to pledge collateral to the Federal Reserve in order to access additional daylight overdraft capacity above their net debit caps. These changes to the policy should benefit the few financially healthy institutions that have been constrained by their net debit caps by increasing their daylight overdraft capacity and should remove a potential impediment to the use of electronic check presentment. The Board has also removed provisions from the PSR policy that are now addressed in the Reserve Banks' Automated Clearing House operating circular. Finally, the Board has decided to retain the $50 million limit on the value of book-entry securities transfers.

DATES: The revised PSR policy is effective December 10, 2001 with the following exceptions: (1) revisions to the criteria used to determine the U.S. capital equivalency measure for foreign banking organizations will take effect on February 21, 2002 and (2) the modification to post electronic check presentments to depository institutions' Federal Reserve accounts at 1 p.m. local time will take effect on April 1, 2002.

FOR FURTHER INFORMATION CONTACT: Paul Bettge, Associate Director (202/452–3174), Stacy Coleman, Manager (202/452–2934), or Connie Horsley, Senior Financial Services Analyst (202/452–5239), Division of Reserve Bank Operations and Payment Systems.

SUPPLEMENTARY INFORMATION:

I. Background

The Board recently conducted a review of its PSR policy to evaluate the effectiveness of its daylight credit policies, recognizing that significant changes have occurred in the banking, payments, and regulatory environment in the past few years. The Board's daylight credit policies addressed net debit caps, capital measures, the daylight overdraft fee, the book-entry securities transfer limit, interaffiliate transfers, third-party access to Fedwire, counseling, ex post and real-time monitoring, and the posting rules.[1] In addition, the Board evaluated further changes to the rate charged on average daily daylight overdrafts in depository institutions' Federal Reserve accounts.[2]

[1] As part of its review, the Board rescinded its policies on Fedwire third-party access effective April 9, 2001 (66 FR 19165, April 13, 2001) and interaffiliate transfers effective January 1, 2002 (66 FR 30198, June 5, 2001).

[2] In October 1992, the Board approved charging a fee for daylight overdrafts, which was to be phased in as 24 basis points in 1994, 48 basis points in 1995, and 60 basis points in 1996 (57 FR 47084, October 14, 1992). In March 1995, however, the Board decided to raise the daylight overdraft fee to

Continued

The Board determined that these policies appear to be generally effective in controlling risk to the Federal Reserve and creating incentives for depository institutions to manage their intraday credit exposures. Furthermore, the PSR policy appears to be well understood by the industry, and private-sector participants have generally benefited from the policy's risk controls. The Board also recognized, however, that the policy has imposed costs on the industry and is considered burdensome by some depository institutions.

In conducting its review, the Board evaluated the effect of past policy actions on depository institutions' behavior and on the markets generally and also considered the effect of various payment system initiatives on payments activity and the demand for daylight credit. Through its analysis, the Board identified growing liquidity pressures among certain payments system participants. Specifically, the Board learned that a small number of financially healthy institutions regularly find their net debit caps to be constraining, causing them to delay sending payments and, in some cases, to turn away business. To address these liquidity concerns, the Board adopted on an interim basis, and requested comment on, a policy that allows depository institutions with self-assessed net debit caps (average, above average, or high) to pledge collateral to the Federal Reserve in order to access additional daylight overdraft capacity above their net debit cap levels (66 FR 30199, June 5, 2001).

The Board also learned through its policy review that some foreign banking organizations (FBOs) believe that their net debit caps constrain their business activity and place them at a competitive disadvantage in comparison with U.S. depository institutions. Some FBOs assert that certain U.S. depository institutions hold a significant portion of their assets in foreign markets but are able to use 100 percent of their total risk-based capital in establishing their caps, while the PSR policy does not recognize the FBOs' worldwide financial strength. In considering the concerns raised by FBOs, the Board assessed the criteria used in determining their U.S. capital equivalency measure. In addition, the Board evaluated trends in FBOs' daylight credit use, considered supervisory and legal issues, assessed the potential impact of new or emerging payments system initiatives, and held discussions with FBOs. To address the liquidity concerns identified by FBOs, the Board requested comment on proposed modifications to the criteria used to determine an FBO's U.S. capital equivalency measure (66 FR 30205, June 5, 2001).

The Board also evaluated the effectiveness of the current daylight overdraft posting rules and found these rules to be generally effective and well understood by the industry. In reviewing the posting rules, however, the Board found that the posting times for electronic check presentment (ECP) transactions often create a disincentive for depository institutions to use Federal Reserve electronic check services. As a result, the Board requested comment on changing the posting time associated with ECP transactions in an effort to remove any disincentive created by the posting rules (66 FR 30195, June 5, 2001).

Finally, the Board considered the effectiveness of the $50 million limit on the transaction size of book-entry securities transfers on Fedwire. The Board focused on whether the limit was imposing an undue regulatory burden on depository institutions and their securities-dealer customers. Because the industry bears a significant portion of the limit's costs in terms of transaction fees and receives a benefit in terms of reduced daylight overdraft fees, the Board requested comment on the desirability of retaining the $50 million limit (66 FR 30193, June 5, 2001).

II. Summary of Comments and Analysis

The Board has updated its PSR policy to incorporate most aspects of its near-term proposals. The following section describes the proposed changes to the PSR policy, provides a summary and analysis of the comments received on the proposals, and highlights the provisions of the revised PSR policy.

A. Increased Daylight Overdraft Capacity Through Collateralization (Docket No. R–1107)

In its review of the PSR policy, the Board identified growing liquidity pressures among certain payments system participants. The Board also recognized that certain payment system initiatives, such as the Clearing House Interbank Payments System with intraday finality (new CHIPS), the Continuous Linked Settlement (CLS) system, and the Federal Reserve's settlement-day finality for ACH credit transactions, may exacerbate these institutions' liquidity needs at specific times during the day. To address these liquidity concerns, the Board adopted on an interim basis and requested comment on a policy that allows a depository institution with a self-assessed net debit cap to pledge collateral to its administrative Reserve Bank to secure daylight overdraft capacity in excess of its net debit cap (interim policy).[3]

In the interim policy, the Board eliminated the separate treatment of book-entry securities overdrafts for self-assessed institutions; however, the Board proposed eliminating the separate treatment of book-entry securities overdrafts for *all* depository institutions with the adoption of a final policy. By eliminating the separate treatment of book-entry securities overdrafts for self-assessed institutions, the Board abolished its collateralization requirement for self-assessed institutions that incurred ''frequent and material'' book-entry securities overdrafts.[4] The previous policy required institutions that met the frequent and material criteria to collateralize fully their peak book-entry securities overdrafts, not just the portion that exceeded the net debit cap. Under the interim policy, Reserve Banks could require self-assessed depository institutions that frequently exceeded their caps as a result of transactions with settlement-day finality to collateralize the difference between their peak daylight overdrafts and their net debit cap levels, rather than the entire amount of their peak book-entry securities overdrafts.[5]

The Board received twenty-five comment letters on its interim policy statement. The commenters included eleven commercial banking organizations and six of their trade

36 basis points instead of 48 basis points and stated it would evaluate further changes to the fee after two years (60 FR 12559, March 7, 1995). In June 2001, the Board requested comment on the benefits and drawbacks associated with the following potential longer-term changes to the PSR policy: (1) Lowering self-assessed net debit caps and eliminating the two-week average caps, (2) implementing a two-tiered pricing regime for daylight overdrafts in which institutions that pledge collateral to the Reserve Banks would pay a lower fee on their collateralized daylight overdrafts than on their uncollateralized daylight overdrafts, and (3) rejecting payments with settlement-day finality that would cause an institution to exceed its daylight overdraft capacity level (66 FR 30208, June 5, 2001). The Board will continue to evaluate these policy options.

[3] The administrative Reserve Bank is responsible for the administration of Federal Reserve credit, reserves, and risk management policies for a given depository institution or other legal entity.

[4] Under the previous policy, an account holder met the ''frequent and material'' criteria when it exceeded its net debit cap, because of book-entry securities transactions, on more than three days in any two consecutive reserve-maintenance periods and by more than 10 percent of its capacity.

[5] These transactions include Fedwire funds transfers, book-entry securities transfers, net settlement service entries, and ACH credit originations.

associations, two clearing organizations, and six Federal Reserve Banks.

Commenters generally supported the Board's interim policy statement. Ten of the commenters explicitly noted that the potential benefits of allowing depository institutions with self-assessed net debit caps to pledge collateral for additional daylight overdraft capacity outweighed any potential drawbacks. Several commenters stated that the interim policy's primary benefits were additional flexibility in managing intraday liquidity and the potential for improved efficiency in payments activity. One commenter believed the policy's elimination of the frequent and material collateralization requirement for book-entry securities overdrafts would reduce regulatory burden. Only one commenter recommended that the Board not adopt the interim policy because it believed the policy would increase its organization's regulatory burden.

Three commenters stated that allowing collateral to support daylight overdraft capacity above net debit cap levels would reduce Federal Reserve credit risk and could more closely align the Federal Reserve's policies with those of other central banks. One commenter who generally supported the policy stated that the costs of pledging additional collateral to the Federal Reserve might negate the benefits of acquiring additional daylight overdraft capacity. Six commenters, however, noted that under the interim policy, depository institutions would primarily use collateral already pledged to a Reserve Bank. Two commenters indicated that institutions might pledge additional collateral once they gain experience with the policy. Three commenters stated that some depository institutions might pledge additional collateral if certain longer-term policy proposals were adopted, such as lowering the single-day net debit cap level and implementing two-tiered pricing for collateralized versus uncollateralized credit.

The Board has adopted the interim policy's provision enabling self-assessed depository institutions to obtain additional daylight credit by pledging collateral, which was intended to provide flexibility in addressing the liquidity needs of the few financially healthy institutions that are or may be constrained by their current net debit caps. In addition, the revised PSR policy continues to allow depository institutions to pledge collateral accepted today for discount window or PSR purposes. In conducting its review of the policy, the Board found that more than 25 percent of account holders already have collateral pledged to the Reserve Banks. The Board believes it would be reasonable for depository institutions to use collateral already pledged to a Reserve Bank for discount window purposes to obtain additional daylight overdraft capacity when that collateral is not supporting an outstanding discount window loan. In addition, the Board expects that very few depository institutions will seek to expand their daylight overdraft capacity levels by pledging collateral because approximately 97 percent of all account holders use less than 50 percent of their net debit caps for their average peak overdrafts.

Two commenters expressed concern about the policy placing limits on the amount of book-entry securities overdrafts that institutions could incur and the potential implications for government securities market participants. The interim policy's elimination of the separate treatment of book-entry securities overdrafts for self-assessed institutions may require certain depository institutions to establish a maximum daylight overdraft capacity limit to accommodate their book-entry securities transactions. The commenters believed that any limitation on book-entry securities overdrafts might cause market disruptions and further noted that as long as these overdrafts were collateralized, a rigid limit would not be necessary. One commenter suggested that if a limit were to be imposed, that the limit be allowed to vary on a daily basis depending on the amount of collateral that the institution had pledged to its Reserve Bank. Another commenter recommended limiting the amount of additional daylight overdraft capacity to 50 percent of current net debit cap levels.

Two commenters supported allowing all book-entry securities overdrafts that are secured pursuant to the Reserve Banks' Operating Circular 10 (Lending) to be excluded from overdrafts measured against the cap.[6] Alternatively, two commenters recommended that the policy allow only those book-entry securities overdrafts in excess of the net debit cap to be secured pursuant to the Operating Circular 10 and exclude them from overdrafts measured against the cap.

Seven commenters expressed concern over the types of collateral accepted under the interim policy, particularly with regard to government securities market participants. Two of these commenters asked that the revised PSR policy reflect the continued acceptance of securities ''in transit'' to collateralize book-entry securities overdrafts.[7] One commenter recommended exploring alternatives to stable pool collateral to secure daylight overdrafts arising from particular transactions whose dollar amounts have the potential to make stable pool collateral requirements impracticable. Two commenters recommended allowing a depository institution to pledge collateral held for its benefit at another depository institution to secure funds overdrafts, provided the collateral is held in an account maintained by a Reserve Bank or is otherwise acceptable to the Reserve Bank.

The Board has decided to include book-entry securities overdrafts for purposes of determining an institution's compliance with its cap. Under the revised PSR policy, the Board requires that those depository institutions with self-assessed net debit caps that wish to expand their daylight overdraft capacity by pledging collateral consult with their Reserve Banks to establish a maximum daylight overdraft capacity limit.[8] The Reserve Banks will consider the institution's reasons for requesting additional daylight overdraft capacity as well as the institution's financial and supervisory information in determining the appropriate level of collateralized credit, if any, to grant above the net debit cap. Depository institutions will continue to have some flexibility as to the specific types of collateral they may pledge to the Reserve Banks; however, all collateral must be acceptable to the Reserve Banks.

The Board recognizes that with the policy's elimination of the separate treatment of book-entry securities overdrafts, some depository institutions may find their net debit cap levels insufficient in accommodating their book-entry securities overdrafts and may request a maximum daylight

[6] Depository institutions that pledge collateral to a Reserve Bank must sign an agreement in Operating Circular 10, which provides the Reserve Bank with a security interest in all the borrower's right, title, and interest in property (wherever located, now owned or hereafter acquired), including, but not limited to, accounts, chattel paper, inventory, equipment, instruments, investment property, general intangibles, payment intangibles, documents, deposit accounts, commercial tort claims, real property, and intellectual property, and which is (a) identified on a collateral schedule, (b) identified on the books or records of a Reserve Bank as pledged to the Bank, or (c) for which a financing statement has been filed.

[7] Securities in transit refer to book-entry securities transferred over Fedwire's National Book-Entry System that have been purchased by a depository institution, but not yet paid for and owned by the institution's customers.

[8] A depository institution's ''maximum daylight overdraft capacity limit'' is the total amount of Reserve Bank-approved daylight overdraft capacity, both uncollateralized and collateralized.

overdraft capacity limit to expand their capacity. To address commenters' concerns related to placing a limit on the amount of an institution's book-entry securities overdrafts, the revised PSR policy will allow the Reserve Banks to continue to accept securities in transit on the Fedwire book-entry securities system as collateral to support an institution's maximum daylight overdraft capacity limit. The Reserve Banks recognize that by accepting securities in transit as collateral to support an institution's additional daylight overdraft capacity, the institution's daylight overdraft capacity will vary on a daily basis.[9]

Two commenters expressed concern about the interim policy's provision that a Reserve Bank could require a depository institution with a self-assessed net debit cap that *frequently* exceeded its daylight overdraft capacity level to collateralize the difference between its peak daylight overdraft and its net debit cap level. These commenters noted that this requirement could marginally increase Federal Reserve credit risk because, unlike the previous policy that stipulated a depository institution with book-entry securities overdrafts that met the frequency and materiality thresholds had to collateralize fully those overdrafts, a depository institution would need to collateralize only the portion of its peak book-entry securities overdraft in excess of its net debit cap.

The Board agrees that this change could increase the Federal Reserve's credit exposure; however, the Board believes the increase in Federal Reserve credit risk would be minimal given that the majority of institutions that participate in the government-securities market do not meet the frequent and material criteria. In addition, for the past several years, the policy has allowed the Reserve Banks to protect themselves from risk when they believe it is appropriate by requiring institutions to pledge collateral. The interim policy allowed Reserve Banks to require collateral for the portion of an institution's daylight overdraft above its net debit cap level if the institution frequently exceeded its cap as a result of transactions with settlement-day finality. In considering the frequency threshold, the Board determined that its longstanding policy of allowing Reserve Banks to exercise discretion in applying risk controls to their account holders is more practicable and precludes the need for the frequency threshold.

Regarding the Board's proposal to eliminate the separate treatment of book-entry securities overdrafts for *all* depository institutions, commenters were generally supportive. The proposed policy change would require depository institutions with exempt-from-filing and de minimis caps to apply for higher net debit caps if they frequently exceed their caps because of book-entry securities transfers. Commenters did not believe such a policy change would create any undue burden. Two commenters noted that depository institutions frequently exceeding their net debit caps might be an indication that the institutions' payment activities have expanded or become more complex. They believed the requirement for such an institution to apply for a higher net debit cap was useful and appropriate.

As mentioned previously, the Board has determined that its existing policies preclude the need for a frequency threshold. Under the Board's policy, Reserve Banks review the status of institutions that exceed their net debit caps during any two-week reserve-maintenance period. In addressing situations where an institution exceeds its net debit cap level, Reserve Banks may recommend that the institution apply for a higher net debit cap. In addition, if the institution does not qualify for a higher net debit cap, Reserve Banks have the discretion to apply risk controls, including requiring collateral, imposing clearing balance requirements, and delaying or rejecting transactions that would exceed the institution's account balance.

Under the revised PSR policy, Reserve Banks will review the status of an institution that exceeds its *de minimis* cap during a reserve-maintenance period and decide if the institution's cap level should be maintained or if the institution should be required to perform a self-assessment for a higher cap. Similarly, Reserve Banks will decide if an institution with an exempt-from-filing cap that incurs overdrafts in its Federal Reserve account in excess of the lesser of $10 million or 20 percent of capital on more than two days in any two consecutive reserve-maintenance periods should maintain its exemption or be required to file for a higher cap. Finally, Reserve Banks will also review the status of any zero cap institution that incurs a daylight overdraft and may decide to monitor the institution's activity in real time and reject or delay certain transactions. If the institution qualifies for a positive cap, the Reserve Bank may suggest that the institution accept an exempt-from-filing cap or file for a higher cap if the institution believes that it will continue to incur daylight overdrafts.

One commenter stated that the policy should allow Reserve Banks to have flexibility in dealing with bankers' banks because they typically have limited ability to pledge collateral to their Reserve Banks but experience large intraday account fluctuations. While the Board's policy allows bankers' banks to access Federal Reserve payment services, bankers' banks that are exempt from reserve requirements do not have regular access to the discount window and, therefore, may not incur daylight overdrafts. Bankers' banks that waive their reserve requirement exemption would be free to establish net debit caps and would be subject to the same PSR policies as other depository institutions.

Another commenter requested clarification on the method used to determine the maximum limit on an institution's daylight overdraft capacity and advocated consistent administration of the revised PSR policy throughout the Federal Reserve System. The Board believes that the revised PSR policy clarifies the conditions under which a depository institution may receive additional daylight overdraft capacity and notes that, pursuant to the Federal Reserve Act, the Board exercises general supervision over the Reserve Banks (section 11j). The Board expects to exercise this authority in a manner that should ensure equitable administration of the revised PSR policy.

Based upon its analysis of the comments received, the Board is adopting all of the provisions of the interim policy except the frequency threshold that determined when a Reserve Bank would require a depository institution with a self-assessed net debit cap to collateralize the difference between its peak daylight overdraft and its net debit cap level. As mentioned previously, the Board believes its longstanding policy of allowing Reserve Banks to exercise discretion in applying risk controls to their account holders is more practicable and precludes the need for a frequency threshold.

In adopting all of the other provisions of the interim policy, the Board recognizes the importance of providing an environment in which payment systems may function effectively and

[9] Depository institutions with self-assessed net debit caps that receive Reserve Bank approval to support a maximum daylight overdraft capacity limit with securities in transit must submit a board-of-directors resolution at least once in each twelve-month period. The resolution requires the depository institution's board of directors to acknowledge that (1) securities in transit will be used to collateralize daylight overdraft capacity in a manner consistent with the reasons and purposes submitted to the institution's administrative Reserve Bank and (2) the value of the securities in transit pledged to the Reserve Bank will fluctuate intraday and over time.

efficiently and remove barriers, as appropriate, to foster risk-reducing payment system initiatives. Under the revised PSR policy, certain depository institutions with self-assessed net debit caps may pledge collateral to their administrative Reserve Banks to secure daylight overdraft capacity in excess of their net debit caps. The Board believes that requiring collateral allows the Federal Reserve to protect the public sector from additional credit risk while providing extra liquidity to the few institutions that might otherwise be constrained. Providing extra liquidity to constrained institutions should help prevent liquidity-related market disruptions. In addition, the Board's decision to eliminate the separate treatment of book-entry securities overdrafts for *all* depository institutions should simplify administration of and compliance with the policy.

B. Daylight Overdraft Capacity for Foreign Banking Organizations (Docket No. R–1108)

During the Board's policy review, a few FBOs indicated that their net debit caps constrain their business activity and place them at a competitive disadvantage to U.S. depository institutions. These FBOs assert that certain U.S. depository institutions hold a significant portion of their assets in foreign markets but are able to use 100 percent of their total risk-based capital in establishing their caps, while the PSR policy does not recognize the FBOs' worldwide financial strength. The Board found that during 2000, approximately 35 percent of U.S. branches and agencies of foreign banks with positive net debit caps had cap utilization levels of 75 percent or more.[10] In contrast, during the same time period, less than 5 percent of domestically chartered institutions used more than 50 percent of their net debit caps for their average daily peak daylight overdrafts.

To address the liquidity concerns identified by FBOs during its review of the policy, the Board requested comment on proposed modifications to the criteria used to determine the U.S. capital equivalency measure for FBOs. The Board proposed (1) eliminating the Basle Capital Accord (BCA) criteria used in the policy to determine U.S. capital equivalency measure for FBOs, (2) replacing the BCA criteria with the strength of support assessment (SOSA) rankings and financial holding company (FHC) status in determining U.S. capital equivalency measure for FBOs, and (3) raising the percentage of capital used in calculating U.S. capital equivalency measure for certain FBOs. The Board also proposed replacing ''liabilities to nonrelated parties'' with ''net due to related depository institutions'' as a proxy for calculating the U.S. capital equivalency measure for SOSA 3-ranked FBOs.[11] Specifically, an FBO's U.S. capital equivalency measure would be equal to one of the following:

- 35 percent of capital for FBOs that are FHCs
- 25 percent of capital for FBOs that are not FHCs and are ranked a SOSA 1
- 10 percent of capital for FBOs that are not FHCs and are ranked a SOSA 2
- 5 percent of ''net due to related depository institutions'' for FBOs that are not FHCs and are ranked a SOSA 3.

The Board received ten comment letters on its proposal regarding daylight overdraft capacity for FBOs. The commenters included three commercial banking organizations and three of their trade associations, one clearing organization, and three Federal Reserve Banks.

All of the commenters supported the proposed changes to the calculation of FBOs' net debit caps. Commenters generally believed that the proposed net debit cap structure, combined with the interim policy that allows depository institutions with self-assessed net debit caps to obtain additional daylight overdraft capacity, reasonably addresses the liquidity needs of FBOs. One commenter noted that the proposal would improve FBOs' capacity to clear and settle U.S. dollar payments.

Four commenters supported further increases in the percentage of capital used in the calculation of FBOs' net debit caps, particularly for institutions that hold an FHC classification. One commenter recommended allowing Reserve Banks to use discretion on a case-by-case basis when providing daylight credit to FBOs. In particular, the commenter stated that the percentage applied to determine the U.S. capital equivalency measure for institutions that are ranked SOSA 1 should be allowed to exceed 25 percent if the Reserve Bank agrees, presuming the institution has demonstrated adequate need for additional liquidity.

With respect to FBOs' access to the U.S. payments system, two commenters stated that the proposed policy changes provided FBOs with appropriate access. Four commenters, although in support of the proposed policy, requested to be treated more similarly to domestically-chartered institutions in the calculation of their net debit caps. Two of these commenters expressed concern that the proposal leaves FBOs at a competitive disadvantage in comparison with domestically-chartered depository institutions. These commenters recommended that the Board consider further actions to address differences in the net debit cap calculation between FBOs and domestic institutions. They maintain that, in many instances, the supervision of FBOs, particularly for large and complex banking organizations, is comparable to, if not more stringent than, the supervision of domestically-chartered depository institutions and that this should offset concerns outlined in the Board's proposal about the risks these institutions pose. One commenter also recommended that foreign banks and domestically-chartered banks be treated comparably with respect to the real-time monitor. None of the commenters, however, addressed the extent to which the Board should consider the legal risks, such as differing international solvency laws, involved in the evaluation of the net debit cap calculation for FBOs.

While the Board recognizes commenters' concerns regarding the criteria used to determine the U.S. capital equivalency measure for FBOs, it believes that the criteria outlined in the Board's proposal are appropriate given the added supervisory and legal risks that FBOs present in comparison with domestically-chartered depository institutions. Although commenters contend that the level of supervision parallels and sometimes surpasses that of domestically-chartered depository institutions, the Board believes that the availability of this information to U.S. regulators may not be timely or comparable to similar information used in the supervision of U.S. depository institutions. The Board also believes that FBOs present additional legal risks, particularly in relation to insolvency laws. The Board believes that it is not practicable for the Federal Reserve to undertake and keep current extensive analyses of the legal risks presented by the insolvency law(s) applicable to each FBO with a Federal Reserve account in order to quantify precisely the legal risk that the Federal Reserve incurs by providing intraday credit to that institution. The Board believes that these additional risks warrant differential treatment of FBOs in relation to the provision of intraday liquidity.

[10] Cap utilization is equal to an institution's average daily peak daylight overdraft divided by the institution's net debit cap.

[11] Reporting Form FFIEC 002/002S. *Report of Assets and Liabilities of U.S. Branches and Agencies of Foreign Banks.* Schedule RAL—Assets and Liabilities: Liabilities: item 4—''Liabilities to nonrelated parties'' and item 5—''Net due to related depository institutions.''

The Board received no comments on its question regarding the appropriateness of replacing ''liabilities to nonrelated parties'' with ''net due to related depository institutions'' as a proxy for calculating U.S. capital equivalency for SOSA 3-ranked FBOs.

One commenter recommended clarifying the policy to refer to ''worldwide capital'' in relation to the capital measure for FBOs as opposed to merely ''capital,'' to be consistent with language from the previous policy statement. The Board believes the capital of a foreign banking organization is, by definition, the organization's ''worldwide capital.''

Four commenters believed that the Federal Reserve should play an active role in an initiative to establish a cross-border collateral pool as an intraday liquidity service for participating banks. These commenters mentioned that such a facility would enable an institution to receive funds in a foreign central bank account by earmarking intraday balances in central bank money with its home country central bank. The Board is amenable to discussing this initiative, but is not addressing it in this notice.

Based upon its analysis and the comments received, the Board is adopting the proposed policy changes to FBOs' net debit caps. The Board is replacing the BCA criteria with SOSA rankings and FHC status in determining the U.S. capital equivalency measure and raising the percentage of capital used in the net debit cap calculation for certain FBOs. The Board believes that SOSA rankings provide broader information about the condition of the FBO, its supervision, and the home country, whereas the BCA distinction provides information only about the home country treatment of bank capital adequacy. Furthermore, the BCA designation reflects the one-time adoption of BCA standards by a country's supervisory authority, while U.S. bank supervisors update the SOSA rankings regularly. The Board believes that, like the SOSA ranking, FHC status is preferable to the BCA distinction in determining the risk posed by FBOs to the U.S. payments system because FHCs must continue to meet certain capital and management standards in order to maintain their status and are subject to enhanced reporting requirements.

In addition, the Board is replacing ''liabilities to nonrelated parties'' with ''net due to related depository institutions'' as a proxy for calculating the U.S. capital equivalency measure for SOSA 3-ranked FBOs. ''Liabilities to nonrelated parties'' may increase relative to assets when an institution becomes financially weaker and could unduly increase the institution's overdraft capacity. ''Net due to related depository institutions'' reflects the amounts owed to the parent by the branch and can be viewed as the capital investment by the FBO parent in its U.S. operations. The Board notes that this policy change would not affect any SOSA 3-ranked FBOs at this time.

C. Modifications to Daylight Overdraft Posting Rules for Electronic Check Presentments (Docket No. R–1109)

In reviewing the PSR posting rules, the Board found that the posting times for electronic check presentment (ECP) transactions often create a disincentive for depository institutions to use Federal Reserve electronic check services. The Reserve Banks deliver the majority of electronic check presentments in the morning, and the delivery of the ECP files constitutes legal presentment of the checks under the terms of the Federal Reserve's uniform check Operating Circular 3. In accordance with the Board's objectives in designing the posting rules, the current posting rules stipulate that debits to depository institutions' Federal Reserve accounts for check presentments occur on the next clock hour that is at least one hour after presentment takes place, beginning at 11 a.m. Eastern Time (ET) and no later than 3 p.m. local time. Because the Reserve Banks generally deliver electronic check presentments in the morning, the corresponding debits occur at 11 a.m. ET. As a result, for many depository institutions, the posting times for electronic check presentments are earlier than the posting times associated with their paper check presentments.

The often earlier debit posting times associated with electronic check presentments have caused some depository institutions to incur daylight overdrafts earlier in the day and, in many cases, for longer periods of time. Because the Reserve Banks charge depository institutions a fee for the amount and duration of their Federal Reserve daylight credit use, the daylight overdraft charges of a few institutions that have moved to electronic check services have grown substantially. As a result, some depository institutions have asserted that the increases in their daylight overdraft charges have reduced or eliminated the benefits of using Federal Reserve electronic check services.

To remove barriers that may discourage depository institutions' use of Federal Reserve electronic check presentment services, the Board requested comment on proposed modifications to its daylight overdraft posting rules to allow debits associated with ECP transactions to post to depository institutions' Federal Reserve accounts no earlier than 1 p.m. local time.

The Board received nineteen comment letters on its proposal to modify daylight overdraft posting rules for ECP transactions. The commenters included eight commercial banking organizations and four of their trade associations, one clearing organization, and six Federal Reserve Banks.

All of the commenters supported the proposed change in the posting time for ECP debits. Commenters generally believed that the benefits of the Board's proposed change in the posting time for ECP debits outweighed any disadvantages. In addition, commenters generally noted that posting ECP debits at 1 p.m. local time should facilitate participation in Federal Reserve ECP services by eliminating any disincentive created by the current posting rules.

None of the commenters indicated that the proposed change in the posting time of ECP debits would provide the Federal Reserve Banks with an inappropriate competitive advantage. One commenter stated that the later posting time actually improves the ability of private-sector banks to compete with Federal Reserve Banks. Another commenter noted that private-sector banks providing ECP services have the additional advantage of negotiating settlement arrangements with their correspondents. Two commenters noted that the proposed posting time does not unduly benefit paying banks or collecting banks, because the vast majority of depository institutions function as both paying and collecting banks.

One commenter recommended that the Board evaluate the potentially negative effect of posting debits and associated credits later in the day on bankers' banks, noting that the policy might impede their ability to manage their accounts within net debit cap levels. The Board believes that because the Federal Reserve Banks deliver the majority of electronic check presentments in the morning, account holders have adequate time before 1 p.m. local time to manage their accounts appropriately.

One commenter recommended that the Board extend the ECP posting time of 1 p.m. local time to debits and credits related to paper check transactions, noting that such a provision would enable many depository institutions to more easily monitor and manage their account activity. The Board notes that Reserve Banks do not post check debits to institutions' accounts prior to

presentment. Therefore, a single time for all check debits and credits would necessarily be later in the day than many depository institutions believed would be appropriate, according to earlier comments on this issue (57 FR 47084, October 14, 1992).

Based upon its analysis of the comments received, the Board has revised the PSR policy to reflect a modified posting time of 1 p.m. local time for ECP transactions. Because the Reserve Banks post the vast majority of check transactions by 1 p.m. local time, the Board believes that applying this posting time to ECP transactions should minimize any disincentive posed by the posting rules to move to ECP services. The Board also believes that the revised posting time should reduce or eliminate any potential increase in daylight overdraft charges created by differences in posting times for ECP and paper check transactions.

D. Retention of the $50 Million Fedwire Securities Transfer Limit (Docket No. R–1110)

During its review, the Board also considered the effectiveness of the $50 million limit on the transaction size of book-entry securities transfers on Fedwire to determine whether the limit was imposing an undue regulatory burden on securities market participants. To better understand the limit's effectiveness, Federal Reserve staff met with representatives of primary dealers, clearing banks, and industry utilities. These representatives supported retention of the limit, noting its positive net effect on the government securities settlement system. To ensure that it considered the perspectives of all parties before making a final determination, the Board requested comment on the desirability of retaining the $50 million limit on the transaction size of book-entry securities transfers on Fedwire.

The Board received fifteen comment letters regarding the $50 million limit. The commenters included seven commercial banking organizations and four of their trade associations, two clearing organizations, and two Federal Reserve Banks.

All of the commenters supported the retention of some limit on the size of book-entry securities transfers on Fedwire. Twelve commenters supported retention of the $50 million limit, while three commenters favored increasing the transfer limit amount to $100 million or more. None of the commenters favored reducing the transfer limit amount.

Ten commenters indicated that retaining a $50 million limit was reasonable and cited reduced overdrafts and enforcement of dealers accepting partial deliveries of large trades as the policy's primary benefits. Three commenters viewed the costs that institutions would incur to modify their systems as a reason not to change the limit, while two commenters specifically stated that changes to the limit would not require costly systems changes for their organizations. Three commenters stated that increasing the transfer limit would reduce administrative burden and would more appropriately reflect the current trading environment while not putting smaller market participants at a competitive disadvantage. Five commenters stated that lowering the transfer limit would increase systems and transactions costs and could potentially increase the number of delivery fails.

Following the September 11 terrorist attacks, one commenter recommended further evaluation of the transfer limit's necessity and of the possibility of lifting or modifying the limit in times of crisis. Board staff recently contacted some commenters who supported the limit to determine whether their views had changed because of the financial market disruptions resulting from the September 11 attacks. These commenters indicated that their views did not change and that they continue to support the limit's retention.

Two commenters stated that the limit's requirement of multiple deliveries per trade generally increases transaction costs and the potential for trade failures or transaction errors. Ten commenters viewed the policy's provision for multiple deliveries in order to reduce position building by dealers as beneficial. One commenter stated that the limit prevents securities delivery logjams that may otherwise occur if larger entities were to regularly accumulate securities in order to make larger par value deliveries first. Another commenter did not believe that the limit promotes any specific benefits in the government securities market.

The Board believes the $50 million limit on book-entry securities transfers in combination with daylight overdraft fees has been effective in reducing total daylight overdrafts. In addition, the industry bears a significant portion of the costs and benefits of the limit and supports retention of the limit. As a result, the Board has retained the $50 million limit on book-entry securities transfers on Fedwire.

III. Competitive Impact Analysis

The Board has established procedures for assessing the competitive impact of rule or policy changes that have a substantial impact on payments system participants.[12] Under these procedures, the Board assesses whether a change would have a direct and material adverse effect on the ability of other service providers to compete effectively with the Federal Reserve in providing similar services due to differing legal powers or constraints, or due to a dominant market position of the Federal Reserve deriving from such differences. If no reasonable modifications would mitigate the adverse competitive effects, the Board will determine whether the expected benefits are significant enough to proceed with the change despite the adverse effects. The Board believes the modifications to its PSR policy will have no adverse effect on the ability of other service providers to compete effectively with the Federal Reserve Banks in providing similar services.

IV. Paperwork Reduction Act

In accordance with the Paperwork Reduction Act of 1995 (44 U.S.C. 3506; 5 CFR 1320 Appendix A.1), the Board reviewed the revised PSR policy under the authority delegated to the Board by the Office of Management and Budget. The collections of information associated with the PSR policy are found in the Guide to the Federal Reserve's Payments System Risk policy.

The information on de minimis and self-assessed net debit caps requested in the Board's PSR policy is currently collected in the mandatory Report of Net Debit Cap (FR 2226; OMB No. 7100–0217). The information on daylight overdraft capacity for foreign banking organizations is currently collected in the Annual Daylight Overdraft Capital Report for U.S. Branches and Agencies of Foreign Banks (FR 2225; OMB No. 7100–0216), a voluntary report.

The Board expects to publish a separate notice issuing changes to the FR 2226 and FR 2225 reporting requirements to comply with the revised PSR policy. The burden associated with these information collections will be addressed at that time.

The Board has a continuing interest in the public's opinions of our collections of information. At any time, comments regarding the burden estimate, or any other aspect of this collection of information, including suggestions for reducing the burden, may be sent to: Secretary, Board of Governors of the Federal Reserve System, 20th and C Streets, NW., Washington, DC 20551, or mailed electronically to *regs.comments@federalreserve.gov,* or

[12] These procedures are described in the Board's policy statement ''The Federal Reserve in the Payments System,'' as revised in March 1990 (55 FR 11648, March 29, 1990).

mailed to the Office of Management and Budget, Paperwork Reduction Project (7100–0199), Washington, DC 20503.

V. Federal Reserve Policy Statement on Payments System Risk

Section I. of the PSR policy is revised, effective December 10, 2001, to read as follows:

Introduction

I. Federal Reserve Daylight Credit Policies
A. Daylight overdraft definition and measurement
B. Pricing
C. Net debit caps
1. Definition
2. Cap categories
a. Self-assessed
b. De minimis
c. Exempt-from-filing
d. Zero
3. Capital
a. U.S.-chartered institutions
b. U.S. branches and agencies of foreign banks
D. Collateral
E. Special situations
1. Edge and agreement corporations
2. Bankers' banks
3. Limited-purpose trust companies
4. Problem institutions
F. Monitoring
1. Ex post
2. Real time
3. Multi-District institutions
G. Transfer-size limit on book-entry securities
II. Policies for private-sector systems
A. Privately operated multilateral settlement systems
B. Private delivery-against-payment securities systems
III. Other Policies
A. Rollovers and continuing contracts

Introduction

The Federal Reserve Board has developed this policy to address the risks that payment systems present to the Federal Reserve Banks (Reserve Banks), to the banking system, and to other sectors of the economy. This policy is directed primarily at risks on large-dollar payment systems, including Federal Reserve and private-sector systems. Risk can arise from transactions on the Federal Reserve's real-time gross settlement system (Fedwire), from transactions processed in other Federal Reserve payment systems (for example, the automated clearinghouse (ACH) system), and from transactions on private large-dollar systems.

The Reserve Banks face direct risk of loss should depository institutions be unable to settle their intraday or ''daylight'' overdrafts in their Federal Reserve accounts before the end of the day.[1] Moreover, systemic risk may occur if an institution participating in a private large-dollar payment system were unable to settle its net debit position. If this were to occur, the institution's creditors in that system might then be unable to settle their obligations in that system or other systems. Serious repercussions could spread to other participants in the private system, to other depository institutions not participating in the system, and to the nonfinancial economy generally. A Reserve Bank could be exposed to an indirect risk if the Federal Reserve's policies did not address this systemic risk. Finally, depository institutions create risk by permitting their customers, including other depository institutions, to incur daylight overdrafts in the depository institutions' accounts in anticipation of receiving covering funds before the end of the day.

The Board is aware that large-dollar systems are an integral part of clearing and settlement systems and that it is vital to keep the payments mechanism operating without significant disruption. Recognizing the importance of avoiding such disruptions, the Board continues to seek to reduce the risks of settlement failures that could cause these disruptions. The Board is also aware that some intraday credit may be necessary to keep the payments mechanism running smoothly and efficiently. The reduction and control of intraday credit risks, although essential, must be accomplished in a manner that will minimize disruptions to the payments mechanism. The Board expects to reduce and control risks without unduly disrupting the smooth operation of the payments mechanism by establishing guidelines for use by institutions and relying largely on the efforts of individual institutions to identify, control, and reduce their own exposures.

The Board expects depository institutions to manage their Federal Reserve accounts effectively and minimize their use of Federal Reserve daylight credit. Although some intraday credit may be necessary, the Board expects that, as a result of its policies, relatively few institutions will consistently rely on intraday credit supplied by the Federal Reserve to conduct their business. The Board also expects to continue observing, over time, a reduction in the volume of intraday credit at those institutions with a pattern of substantial reliance on such credit. The Board will continue to monitor the effect of its policies on the payments system.

The general methods used to control intraday credit exposures are explained in the policies below. These methods include limits on daylight overdrafts in depository institutions' accounts at Reserve Banks; collateralization, in certain situations, of daylight overdrafts at the Federal Reserve; limits on the maximum level of credit exposure that can be produced by each participant on private large-dollar systems; availability of backup facilities capable of completing daily processing requirements for private large-dollar systems; and credit and liquidity safeguards for private delivery-against-payment systems. To assist depository institutions in implementing the Board's policies, the Federal Reserve has prepared two documents, the ''Overview of the Federal Reserve's Payments System Risk Policy'' and the ''Guide to the Federal Reserve's Payments System Risk Policy,'' which are available on line at *http://www.federalreserve.gov/PaymentSystems/PSR* or from any Reserve Bank. The ''Overview of the Federal Reserve's Payments System Risk Policy'' summarizes the Board's policy on payments system risk, including net debit caps and daylight overdraft fees. The overview is intended for use by institutions that incur only small and infrequent daylight overdrafts. The ''Guide to the Federal Reserve's Payments System Risk Policy'' explains in detail how these policies apply to different institutions and includes procedures for completing a self-assessment and filing a cap resolution, as well as information on other aspects of the policy.

I. Federal Reserve Daylight Credit Policies

A. Daylight Overdraft Definition and Measurement

A daylight overdraft occurs when a depository institution's Federal Reserve account is in a negative position during the business day. The Reserve Banks use an ex post system to measure daylight overdrafts in depository institutions' Federal Reserve accounts. Under this ex post measurement system, Fedwire funds transfers, book-entry securities transfers, and net settlement transactions are posted as they are processed during the business day. Other transactions, including automated

[1] In this policy statement, the terms ''depository institution'' or ''institution'' will be used to refer not only to institutions defined as ''depository institutions'' in 12 U.S.C. 461(b)(1)(A), but also to U.S. branches and agencies of foreign banking organizations, Edge and agreement corporations, and bankers' banks, unless the context indicates a different reading.

clearinghouse and check transactions, are posted to depository institutions' accounts according to a defined schedule. The following table presents the schedule used by the Federal Reserve for posting transactions to institutions' accounts for purposes of measuring daylight overdrafts.

Procedures for Measuring Daylight Overdrafts [2]

Opening Balance (Previous Day's Closing Balance)

Post Throughout Business Day:
- +/− Fedwire funds transfers
- +/− Fedwire book-entry securities transfers
- +/− Net settlement entries.

Post at 8:30 a.m. Eastern Time:
- +/− Government and commercial ACH credit transactions [3]
- + Treasury Electronic Federal Tax Payment System (EFTPS) investments from ACH credit transactions
- + Advance-notice Treasury investments
- + Treasury checks, postal money orders, local Federal Reserve Bank checks, and EZ-Clear savings bond redemptions in separately sorted deposits
- − Penalty assessments for tax payments from the Treasury Investment Program (TIP).[4]

Post at 8:30 a.m. Eastern Time and Hourly, on the Half-Hour, Thereafter:
- +/− Main Account Administrative Investment or Withdrawals from TIP
- +/− SDI (Special Direct Investment) Administrative Investment or Withdrawals from TIP
- + 31 CFR Part 202 Account Deposits from TIP
- − Uninvested PATAX Tax Deposits from TIP
- − Main Account Balance Limit Withdrawals from TIP
- − Collateral Deficiency Withdrawals from TIP
- − 31 CFR Part 202 Deficiency Withdrawals from TIP.

Post at 8:30 a.m., 11:30 a.m., and 6:30 p.m. Eastern Time:
- − Main Account Treasury Withdrawals from TIP.[5]

Post by 9:15 a.m. Eastern Time:
- + U.S. Treasury and government agency book-entry interest and redemption payments
- + U.S. Treasury and government agency matured coupons and definitive securities received before the maturity date.

Post Beginning at 9:15 a.m. Eastern Time:
- − Original issues of Treasury securities.[6]

Post at 9:30 a.m. Eastern Time and Hourly, on the Half-Hour, Thereafter:
- + FR–ETA Value Fedwire Investments from TIP.

Post at 11:00 a.m. Eastern Time:
- +/− ACH debit transactions
- + EFTPS investments from ACH debit transactions.

Post at 11:00 a.m. Eastern Time and Hourly Thereafter:
- +/− Commercial check transactions, including returned checks [7]
- +/− Check corrections amounting to $1 million or more
- + Currency and coin deposits
- + Credit adjustments amounting to $1 million or more.

Post at 12:30 p.m. Eastern Time and Hourly, on the Half-Hour, Thereafter:
- + Dynamic Investments from TIP.

Post by 1:00 p.m. Eastern Time:
- + Same-day Treasury investments.

Post at 1:00 p.m. Local Time and Hourly Thereafter (Beginning on April 1, 2002):
- − Electronic check presentments.[8]

Post at 5:00 p.m. Eastern Time:
- + Treasury checks, postal money orders, and EZ-Clear savings bond redemptions in separately sorted deposits. These items must be presented by 4:00 p.m. Eastern Time.
- + Local Federal Reserve Bank checks. These items must be presented before 3:00 p.m. Eastern Time.
- +/− Same-day ACH transactions. These transactions include ACH return items, check-truncation items, and flexible settlement items.

Post at 6:30 p.m. Eastern Time:[9]
- + Penalty Abatements from TIP.

Post After the Close of Fedwire Funds Transfer System:
- +/− All other transactions. These transactions include the following: local Federal Reserve Bank checks presented after 3:00 p.m. eastern time but before 3:00 p.m. local time; noncash collection; credits for U.S. Treasury and government agency definitive security interest and redemption payments if the coupons or securities are received on or after the maturity date; currency and coin shipments; small-dollar credit adjustments; and all debit adjustments. Discount-window loans and repayments are normally posted after the close of Fedwire as well; however, in unusual circumstances a discount window loan may be posted earlier in the day with repayment 24 hours later, or a loan may be repaid before it would otherwise become due.

Equals:

Closing Balance

B. Pricing

Reserve Banks charge a fee for average daily daylight overdrafts in Federal Reserve accounts. Daylight overdraft fees apply to all daylight overdrafts in depository institutions' Federal Reserve accounts above the level of a deductible; however, Reserve Banks will waive fees of $25 or less in any two-week reserve-maintenance period.

For each two-week reserve-maintenance period, the Reserve Banks calculate and assess daylight overdraft fees, which are equal to the sum of any

[2] This schedule of posting rules does not affect the overdraft restrictions and overdraft-measurement provisions for nonbank banks established by the Competitive Equality Banking Act of 1987 and the Board's Regulation Y (12 CFR 225.52).

[3] Depository institutions that are monitored in real time must fund the total amount of their commercial ACH credit originations when the transactions are processed. If the Federal Reserve receives commercial ACH credit transactions from depository institutions monitored in real time after the scheduled close of the Fedwire funds transfer system, these transactions will be processed when the Federal Reserve's Account Balance Monitoring System (ABMS) reopens, or by the ACH deposit deadline, whichever is earlier. The ABMS provides intraday account information to the Reserve Banks and depository institutions and is used primarily to give authorized Reserve Bank personnel a mechanism to control and monitor account activity for selected institutions. For more information on ACH transaction processing, refer to the ACH Settlement Day Finality Guide available through the Federal Reserve Financial Services Web site at *http://www.frbservices.org*.

[4] The Reserve Banks will identify and notify depository institutions with Treasury-authorized penalties on Thursdays. In the event that Thursday is a holiday, the Reserve Banks will identify and notify depository institutions with Treasury-authorized penalties on the following business day. Penalties will then be posted on the business day following notification.

[5] On rare occasions, the Treasury may announce withdrawals in advance that are based on depository institutions' closing balances on the withdrawal date. The Federal Reserve will post these withdrawals after the close of Fedwire.

[6] Original issues of government agency securities are delivered as book-entry securities transfers and will be posted when the securities are delivered to the purchasing institutions.

[7] Electronic check presentments will post at 11:00 a.m. Eastern Time and hourly thereafter until April 1, 2002.

[8] The Federal Reserve Banks will post debits to depository institutions' accounts for electronic check presentments made before 12:00 p.m. local time at 1:00 p.m. local time. The Reserve Banks will post presentments made after 12:00 p.m. local time on the next clock hour that is at least one hour after presentment takes place but no later than 3:00 p.m. local time.

[9] The Federal Reserve Banks will process and post Treasury-authorized penalty abatements on Thursdays. In the event that Thursday is a holiday, the Federal Reserve Banks will process and post Treasury-authorized penalty abatements on the following business day.

daily daylight overdraft charges during the period. For each day, an institution's daylight overdraft charge is equal to the effective daily rate charged for daylight overdrafts multiplied by the average daylight overdraft for the day minus a deductible valued at the effective daily rate.

Daylight overdraft fees are calculated using an annual rate of 36 basis points, quoted on the basis of a 24-hour day. To obtain the effective annual rate for the standard Fedwire operating day, the quoted 36-basis-point fee is multiplied by the fraction of a 24-hour day during which Fedwire is scheduled to operate. For example, under an 18-hour scheduled Fedwire operating day, the effective annual rate used to calculate daylight overdraft fees equals 27 basis points (36 basis points multiplied by 18/24).[10] The effective daily rate is calculated by dividing the effective annual rate by 360.

An institution's average daily daylight overdraft is calculated by dividing the sum of its negative Federal Reserve account balances at the end of each minute of the scheduled Fedwire operating day (with positive balances set to zero) by the total number of minutes in the scheduled Fedwire operating day.

The daily daylight overdraft charge is reduced by a deductible, valued at the effective daily rate for a 10-hour operating day. The deductible equals 10 percent of a capital measure (see section I.C.3., ''Capital''). Because the effective daily rate applicable to the deductible is kept constant at the 10-hour-operating-day rate, any changes to the scheduled Fedwire operating day will not affect the value of the deductible.

C. Net Debit Caps

1. Definition

To limit the aggregate amount of daylight credit that the Reserve Banks extend, each institution incurring daylight overdrafts in its Federal Reserve account must adopt a net debit cap, that is, a ceiling on the daylight overdraft position that it can incur during a given interval. Alternatively, if an institution's daylight overdrafts generally do not exceed the lesser of $10 million or 20 percent of its capital, the institution may qualify for the exempt-from-filing cap. An institution must be financially healthy and have regular access to the discount window in order to adopt a net debit cap greater than zero or qualify for the filing exemption.

An institution's cap category and capital measure determine the size of its net debit cap. More specifically, the net debit cap is calculated as an institution's cap multiple times its capital measure:

net debit cap = cap multiple × capital measure

Cap categories (see section I.C.2., ''Cap categories'') and their associated cap levels, set as multiples of capital, are listed below:

NET DEBIT CAP MULTIPLES

Cap category	Single day	Two-week average
High	2.25	1.50
Above average	1.875	1.125
Average	1.125	0.75
De minimis	0.40	0.40
Exempt from filing [11]	$10 million or 0.20	$10 million or 0.20
Zero	0.0	0.0

[11] The net debit cap for the exempt-from-filing category is equal to the lesser of $10 million or 0.20 multiplied by a capital measure.

An institution is expected to avoid incurring daylight overdrafts that, on average over a two-week period, exceed its two-week average cap, and, on any day, exceed its single-day cap. The two-week average cap provides flexibility, in recognition that fluctuations in payments can occur from day to day. The purpose of the higher single-day cap is to limit excessive daylight overdrafts on any day and to ensure that institutions develop internal controls that focus on their exposures each day, as well as over time.

The two-week average cap is measured against the average, over a two-week reserve-maintenance period, of an institution's daily maximum daylight overdraft positions in its Federal Reserve account. In calculating the two-week average, the Federal Reserve treats each positive end-of-minute balance in an institution's Federal Reserve account as if the account balance were equal to zero. The number of days used in calculating the average is the number of business days the institution's Reserve Bank is open during the reserve-maintenance period.

The Board's policy on net debit caps is based on a specific set of guidelines and some degree of examiner oversight. Under the Board's policy, a Reserve Bank may limit or prohibit an institution's use of Federal Reserve intraday credit if (1) the institution's use of daylight credit is deemed by the institution's supervisor to be unsafe or unsound; (2) the institution does not qualify for a positive net debit cap (see section I.C.2., ''Cap categories''); or (3) the institution poses excessive risk to a Reserve Bank by incurring chronic overdrafts in excess of what the Reserve Bank determines is prudent.

While capital measures differ, the net debit cap provisions of this policy apply to foreign banking organizations (FBOs) to the same extent that they apply to U.S. institutions. The Reserve Banks will advise home-country supervisors of the daylight overdraft capacity of U.S. branches and agencies of FBOs under their jurisdiction, as well as of other pertinent information related to the FBOs' caps. The Reserve Banks will also provide information on the daylight overdrafts in the Federal Reserve accounts of FBOs' U.S. branches and agencies in response to requests from home-country supervisors.

2. Cap Categories

The policy defines the following six cap categories, described in more detail below: zero, exempt-from-filing, de minimis, average, above average, and high. The average, above average, and high cap categories are referred to as ''self-assessed'' caps.

a. Self-assessed. In order to establish a net debit cap category of average, above average, or high, an institution must perform a self-assessment of its own creditworthiness, intraday funds management and control, customer credit policies and controls, and operating controls and contingency

[10] A change in the length of the scheduled Fedwire operating day would not change the amount of fees charged because the effective daily rate is applied to average daylight overdrafts, which, in turn, would be adjusted by the change in the operating day.

procedures.[12] The assessment of creditworthiness is based on the institution's supervisory rating and Prompt Corrective Action (PCA) designation.[13] An institution may perform a full assessment of its creditworthiness in certain limited circumstances, for example, if its condition has changed significantly since its last examination, or if it possesses additional substantive information regarding its financial condition. An institution performing a self-assessment must also evaluate its intraday funds-management procedures and its procedures for evaluating the financial condition of and establishing intraday credit limits for its customers. Finally, the institution must evaluate its operating controls and contingency procedures to determine if they are sufficient to prevent losses due to fraud or system failures. The ''Guide to the Federal Reserve's Payments System Risk Policy,'' available on line at http://www.federalreserve.gov/PaymentSystems/PSR or from any Reserve Bank, includes a detailed explanation of the self-assessment process.

Each institution's board of directors must review the self-assessment and determine the appropriate cap category. The process of self-assessment, with board-of-directors review, should be conducted at least once in each twelve-month period. A cap determination may be reviewed and approved by the board of directors of a holding company parent of a depository institution, provided that (1) the self-assessment is performed by each entity incurring daylight overdrafts, (2) the entity's cap is based on the entity's own capital, and (3) each entity maintains for its primary supervisor's review its own file with supporting documents for its self-assessment and a record of the parent's board-of-directors review.[14]

In applying these guidelines, each institution should maintain a file for examiner review that includes (1) worksheets and supporting analysis used in its self-assessment of its own risk category, (2) copies of senior-management reports to the board of directors of the institution or its parent (as appropriate) regarding that self-assessment, and (3) copies of the minutes of the discussion at the appropriate board-of-directors meeting concerning the institution's adoption of a cap category.[15]

As part of its normal examination, the depository institution's examiners may review the contents of the self-assessment file.[16] The objective of this review is to ensure that the institution has applied the guidelines seriously and diligently, that the underlying analysis and method were reasonable, and that the resultant self-assessment was generally consistent with the examination findings. Examiner comments, if any, should be forwarded to the board of directors of the institution. The examiner, however, would generally not require a modification of the self-assessed cap category, but rather would inform the appropriate Reserve Bank of any concerns. The Reserve Bank would then decide whether to modify the cap category. For example, if the institution's level of daylight overdrafts constitutes an unsafe or unsound banking practice, the Reserve Bank would likely assign the institution a zero net debit cap and impose additional risk controls.

The contents of the self-assessment file will be considered confidential by the institution's examiner. Similarly, the Federal Reserve and the institution's examiner will hold the actual cap level selected by the institution confidential. Net debit cap information should not be shared with outside parties or mentioned in any public documents; however, net debit cap information will be shared with the home-country supervisor of U.S. branches and agencies of foreign banks.

The Reserve Banks will review the status of any institution with a self-assessed net debit cap that exceeds its cap during a two-week reserve-maintenance period and will decide if the cap should be maintained or if additional action should be taken (see section I.F., ''Monitoring'').

b. De minimis. Many depository institutions incur relatively small overdrafts and thus pose little risk to the Federal Reserve. To ease the burden on these small overdrafters of engaging in the self-assessment process and to ease the burden on the Federal Reserve of administering caps, the Board allows institutions that meet reasonable safety standards to incur de minimis amounts of daylight overdrafts without performing a self-assessment. A depository institution may incur daylight overdrafts up to 40 percent of its capital if the institution submits a board-of-directors resolution.

An institution with a de minimis cap must submit to its Reserve Bank at least once each year a copy of its board-of-directors resolution (or a resolution by its holding company's board) approving the depository institution's use of daylight credit up to the de minimis level. The Reserve Banks will review the status of a de minimis cap institution that exceeds its cap during a two-week reserve-maintenance period and will decide if the de minimis cap should be maintained or if the institution will be required to perform a self-assessment for a higher cap.

c. Exempt-from-filing. Depository institutions that only rarely incur daylight overdrafts in their Federal Reserve accounts that exceed the lesser of $10 million or 20 percent of their capital are excused from performing self-assessments and filing board-of-directors resolutions with their Reserve Banks. This dual test is designed to limit the filing exemption to depository institutions that create only low-dollar risks to the Reserve Banks and that

[12] This assessment should be done on an individual-institution basis, treating as separate entities each commercial bank, each Edge corporation (and its branches), each thrift institution, and so on. An exception is made in the case of U.S. branches and agencies of FBOs. Because these entities have no existence separate from the FBO, all the U.S. offices of FBOs (excluding U.S.-chartered bank subsidiaries and U.S.-chartered Edge subsidiaries) should be treated as a consolidated family relying on the FBO's capital.

[13] Section 131 of the 1991 FDICIA defines five PCA designations. An insured depository institution is (1) ''well capitalized'' if it significantly exceeds the required minimum level for each relevant capital measure, (2) ''adequately capitalized'' if it meets the required minimum level for each relevant capital measure, (3) ''undercapitalized'' if it fails to meet the required minimum level for any relevant capital measure, (4) ''significantly undercapitalized'' if it is significantly below the required minimum level for any relevant capital measure, or (5) ''critically undercapitalized'' if it fails to meet any level specified under subsection (c)(3)(A), which provides that each appropriate Federal banking agency shall, by regulation, in consultation with the FDIC, specify the ratio of tangible equity to total assets at which an insured depository institution is critically undercapitalized (Public Law 102–242, title I, Sec. 131(a), December 19, 1991, 105 Stat. 2253).

[14] An FBO should undergo the same self-assessment process as a domestic bank in determining a net debit cap for its U.S. branches and agencies. Many FBOs, however, do not have the same management structure as U.S. depository institutions, and adjustments should be made as appropriate. If an FBO's board of directors has a more limited role to play in the bank's management than a U.S. board has, the self-assessment and cap category should be reviewed by senior management at the FBO's head office that exercises authority over the FBO equivalent to the authority exercised by a board of directors over a U.S. depository institution. In cases in which the board of directors exercises authority equivalent to that of a U.S. board, cap determination should be made by the board of directors.

[15] In addition, for FBOs, the file that is made available for examiner review by the U.S. offices of an FBO should contain the report on the self-assessment that the management of U.S. operations made to the FBO's senior management and a record of the appropriate senior management's response or the minutes of the meeting of the FBO's board of directors or other appropriate management group, at which the self-assessment was discussed.

[16] Between examinations, examiners or Reserve Bank staff may contact an institution about its cap if statistical or supervisory reports or ad hoc information suggest that there may have been a change in the institution's financial condition.

incur small overdrafts relative to their capital.

The Reserve Banks will review the status of an exempt depository institution that incurs overdrafts in its Federal Reserve account in excess of $10 million or 20 percent of capital on more than two days in any two consecutive two-week reserve-maintenance periods. The Reserve Bank will decide if the exemption should be maintained or if the institution will be required to file for a cap. Any exemptions for depository institutions that meet the size and frequency standards are granted at the discretion of the Reserve Bank.

d. Zero. Some financially healthy depository institutions that could obtain positive net debit caps choose to have zero caps. Often these institutions have very conservative internal policies regarding the use of Federal Reserve daylight credit or simply want to ensure that they do not incur daylight overdrafts to avoid any daylight overdraft fees. If a depository institution that has adopted a zero cap incurs a daylight overdraft, the Reserve Bank counsels the institution and may monitor the institution's activity in real time and reject or delay certain transactions that would cause an overdraft. In addition, if the institution qualifies for a positive cap, the Reserve Bank may suggest that the institution adopt an exempt-from-filing cap or file for a higher cap if the institution believes that it will continue to incur daylight overdrafts.

In addition, a Reserve Bank may assign a depository institution a zero net debit cap. Institutions that may pose special risks to the Reserve Banks, such as those without regular access to the discount window, those incurring daylight overdrafts in violation of this policy, or those in weak financial condition, are generally assigned a zero cap (see section I.E.4., ''Problem institutions''). Recently-chartered institutions may also be assigned a zero net debit cap.

3. Capital

As described above, an institution's cap category and capital measure determine the size of its net debit cap. The capital measure used in calculating an institution's net debit cap depends upon its chartering authority and home-country supervisor.

a. U.S.-chartered institutions. For depository institutions chartered in the United States, net debit caps are multiples of ''qualifying'' or similar capital measures that consist of those capital instruments that can be used to satisfy risk-based capital standards, as set forth in the capital adequacy guidelines of the federal financial regulatory agencies. All of the federal financial regulatory agencies collect, as part of their required reports, data on the amount of capital that can be used for risk-based purposes—''risk-based'' capital for commercial and savings banks and savings associations and total regulatory reserves for credit unions. Other U.S.-chartered entities that incur daylight overdrafts in their Federal Reserve accounts should provide similar data to their Reserve Banks.

b. U.S. branches and agencies of foreign banks. The following policy on U.S. branches and agencies of foreign banks' net debit caps is effective through February 20, 2002.

For U.S. agencies and branches of foreign banks, net debit caps on daylight overdrafts in Federal Reserve accounts are calculated by applying the cap multiples for each cap category to a consolidated U.S. capital equivalency measure.[17]

For a foreign bank whose home-country supervisor adheres to the Basle Capital Accord, U.S. capital equivalency is equal to the greater of 10 percent of worldwide capital or 5 percent of the total liabilities of each agency or branch, including acceptances, but excluding accrued expenses and amounts due and other liabilities to offices, branches, and subsidiaries of the foreign bank. In the absence of contrary information, the Reserve Banks presume that all banks chartered in G–10 countries meet the acceptable prudential capital and supervisory standards and will consider any bank chartered in any other nation that adopts the Basle Capital Accord (or requires capital at least as great and in the same form as called for by the accord) eligible for the Reserve Banks' review for meeting acceptable prudential capital and supervisory standards.

For all other foreign banks, U.S. capital equivalency is measured as the greater of (1) the sum of the amount of capital (but not surplus) that would be required of a national bank being organized at each agency or branch location, or (2) the sum of 5 percent of the total liabilities of each agency or branch, including acceptances, but excluding accrued expenses and amounts due and other liabilities to offices, branches, and subsidiaries of the foreign bank.

The following policy replaces the above policy on U.S. branches and agencies of foreign banks' net debit caps beginning on February 21, 2002.

For U.S. branches and agencies of foreign banks, net debit caps on daylight overdrafts in Federal Reserve accounts are calculated by applying the cap multiples for each cap category to the FBO's U.S. capital equivalency measure.[18] U.S. capital equivalency is equal to the following:

- 35 percent of capital for FBOs that are financial holding companies (FHCs)[19]
- 25 percent of capital for FBOs that are not FHCs and have a strength of support assessment ranking (SOSA) of 1[20]
- 10 percent of capital for FBOs that are not FHCs and are ranked a SOSA 2
- 5 percent of ''net due to related depository institutions'' for FBOs that are not FHCs and are ranked a SOSA 3.

Granting a net debit cap, or any extension of intraday credit, to a depository institution is at the discretion of the Reserve Bank. In the event a Reserve Bank grants a net debit cap or extends intraday credit to a financially healthy SOSA 3-ranked FBO, the Reserve Bank may require such credit to be fully collateralized, given the heightened supervisory concerns with SOSA 3-ranked FBOs.

D. Collateral

The Board recognizes that while net debit caps provide sufficient liquidity to most institutions, some depository institutions may still experience liquidity pressures. The Board believes it is important to provide an environment in which payment systems may function effectively and efficiently

[17] The term ''U.S. capital equivalency'' is used in this context to refer to the particular capital measure used to calculate net debit caps and does not necessarily represent an appropriate capital measure for supervisory or other purposes.

[18] See footnote 17.

[19] The Gramm-Leach-Bliley Act (Public Law 106–102, 113 Stat. 1338 (1999)) defines a financial holding company as a bank holding company that meets certain eligibility requirements. In order for a bank holding company to become a financial holding company and be eligible to engage in the new activities authorized under the Gramm-Leach-Bliley Act, the Act requires that all depository institutions controlled by the bank holding company be well capitalized and well managed. With regard to a foreign bank that operates a branch or agency or owns or controls a commercial lending company in the United States, the Act requires the Board to apply comparable capital and management standards that give due regard to the principle of national treatment and equality of competitive opportunity.

[20] The SOSA ranking is composed of four factors, including the FBO's financial condition and prospects, the system of supervision in the FBO's home country, the record of the home country's government in support of the banking system or other sources of support for the FBO; and transfer risk concerns. Transfer risk relates to the FBO's ability to access and transmit U.S. dollars, which is an essential factor in determining whether an FBO can support its U.S. operations. The SOSA ranking is based on a scale of 1 through 3, with 1 representing the lowest level of supervisory concern.

and remove barriers, as appropriate, to foster risk-reducing payment system initiatives. Consequently, certain depository institutions with self-assessed net debit caps may pledge collateral to their administrative Reserve Banks to secure daylight overdraft capacity in excess of their net debit caps, subject to Reserve Bank approval.[21] The Board believes that requiring collateral allows the Federal Reserve to protect the public sector from additional credit risk while providing extra liquidity to the few institutions that might otherwise be constrained. Providing extra liquidity to constrained institutions should help prevent liquidity-related market disruptions.

A depository institution with a self-assessed net debit cap that wishes to expand its daylight overdraft capacity by pledging collateral should consult with its administrative Reserve Bank. The Reserve Bank will consider the institution's reasons for requesting additional daylight overdraft capacity as well as its financial and supervisory information in determining the appropriate level of collateralized credit, if any, to grant above the net debit cap. The financial and supervisory information considered may include, but is not limited to, capital and liquidity ratios, the composition of balance sheet assets, CAMELS or other supervisory ratings and assessments, and SOSA rankings (for U.S. branches and agencies of foreign banks).

The Reserve Banks will work with a depository institution that requests additional daylight overdraft capacity to decide on the appropriate maximum daylight overdraft capacity level. If the Reserve Bank approves the request for additional daylight overdraft capacity, the depository institution must submit a board-of-directors resolution at least once in each twelve-month period. An institution's maximum daylight overdraft capacity is defined as follows:

maximum daylight overdraft capacity = net debit cap + Reserve Bank-approved collateralized credit

This policy is intended to provide some additional liquidity to the few institutions that might otherwise be constrained from participating in risk-reducing payment system initiatives. Depository institutions that request daylight overdraft capacity beyond the net debit cap must have already explored other alternatives to address their increased liquidity needs.[22] In addition, depository institutions have some flexibility as to the specific types of collateral they may pledge to the Reserve Banks; however, all collateral must be acceptable to the Reserve Banks.[23]

Depository institutions with exempt-from-filing and de minimis net debit caps may *not* obtain additional daylight overdraft capacity by pledging collateral. These depository institutions must first file for a higher net debit cap to obtain additional daylight overdraft capacity.

Similarly, depository institutions with zero net debit caps may *not* obtain additional daylight overdraft capacity by pledging collateral. If an institution has voluntarily adopted a zero net debit cap, but qualifies for a positive net debit cap, it must file for a positive net debit cap to obtain daylight overdraft capacity. Depository institutions that have been assigned a zero net debit cap by their administrative Reserve Bank are not eligible to apply for any daylight overdraft capacity.

A self-assessed institution that has been approved for additional daylight overdraft capacity should avoid incurring daylight overdrafts that, on average over a two-week period, exceed its two-week average limit, and, on any day, exceed its single-day limit. The two-week average limit is equal to the two-week average cap plus the amount of applicable Reserve Bank-approved collateral, averaged over a two-week reserve-maintenance period. The single-day limit is equal to an institution's net debit cap plus the amount of applicable Reserve Bank-approved collateral.[24]

The Reserve Banks will review the status of any institution that exceeds its maximum daylight overdraft capacity during a two-week reserve-maintenance period and will decide if this limit should be maintained or if additional action should be taken (see section I.F., ''Monitoring'').

E. Special Situations

Special risks are presented by the participation on Fedwire of Edge and agreement corporations, bankers' banks that are not subject to reserve requirements, limited-purpose trust companies, and institutions that have been assigned a zero cap by their Reserve Banks. Most of these institutions lack regular discount-window access. In developing its policy for these institutions, the Board has sought to balance the goal of reducing and managing risk in the payments system, including risk to the Federal Reserve, with that of minimizing the adverse effects on the payments operations of these institutions.

Regular access to the Federal Reserve discount window generally is available to institutions that are subject to reserve requirements. If an institution that is not subject to reserve requirements and thus does not have regular discount-window access were to incur a daylight overdraft, the Federal Reserve might end up extending overnight credit to that institution if the daylight overdraft were not covered by the end of the business day. Such a credit extension would be contrary to the quid pro quo of reserves for regular discount-window access as reflected in the Federal Reserve Act and in Board regulations. Thus, institutions that do not have regular access to the discount window should not incur daylight overdrafts in their Federal Reserve accounts.

Certain institutions are subject to a daylight-overdraft penalty fee levied against the average daily daylight overdraft incurred by the institution. These include Edge and agreement corporations, bankers' banks that are not subject to reserve requirements, and limited-purpose trust companies. The annual rate used to determine the daylight-overdraft penalty fee is equal to the annual rate applicable to the

[21] The administrative Reserve Bank is responsible for the administration of Federal Reserve credit, reserves, and risk management policies for a given depository institution or other legal entity.

[22] Some potential alternatives available to a depository institution to address increased intraday credit needs include (1) filing for a higher net debit cap, (2) shifting funding patterns or delaying the origination of funds transfers, or (3) transferring some payments processing business to a correspondent bank. Furthermore, the Board's policies on Federal Reserve daylight credit extensions are intended to address intraday risk to the Federal Reserve arising from daylight overdrafts. Most transactions that lack settlement-day finality, however, pose primarily interday, rather than intraday, risk. Escalated counseling, requiring collateral, or applying for a maximum daylight overdraft capacity limit for daylight overdrafts caused by these transactions may be of limited use in reducing or managing the associated overdrafts. Under administrative counseling flexibility, the Reserve Banks work with affected institutions on means of avoiding daylight overdrafts, but generally do not subject these institutions to escalated levels of counseling, require collateral, or assign a zero cap.

[23] The Reserve Banks may accept securities in transit on the Fedwire book-entry securities system as collateral to support a maximum daylight overdraft capacity level. Securities in transit refer to book-entry securities transferred over Fedwire's National Book-Entry System that have been purchased by a depository institution but not yet paid for and owned by the institution's customers.

[24] A depository institution with a self-assessed cap that has been approved for additional daylight overdraft capacity may, at any time, pledge more or less collateral than its Reserve Bank-approved collateral limit. Applicable collateral to be used in the calculation of an institution's single-day and two-week average limit must be less than or equal to the amount of collateral approved by the Reserve Bank.

daylight overdrafts of other depository institutions (36 basis points) plus 100 basis points multiplied by the fraction of a 24-hour day during which Fedwire is scheduled to operate (18/24). The daily daylight-overdraft penalty rate is calculated by dividing the annual penalty rate by 360.

The daylight-overdraft penalty rate applies to the institution's average daily daylight overdraft in its Federal Reserve account. The daylight-overdraft penalty rate is charged in lieu of, not in addition to, the rate used to calculate daylight overdraft fees for depository institutions described in section I.B. While daylight overdraft fees are calculated differently for these institutions than for depository institutions, overnight overdrafts at these institutions are generally priced the same as overnight overdrafts at other depository institutions.

1. Edge and Agreement Corporations

Edge [25] and agreement corporations should refrain from incurring daylight overdrafts in their Federal Reserve accounts. In the event that any daylight overdrafts occur, the Edge or agreement corporation must post collateral to cover the overdrafts. In addition to posting collateral, the Edge or agreement corporation would be subject to the daylight-overdraft penalty rate levied against the average daily daylight overdrafts incurred by the institution, as described above.

This policy reflects the Board's concerns that these institutions lack regular access to the discount window and the possibility that the parent company may be unable or unwilling to cover its subsidiary's overdraft on a timely basis. The Board notes that the parent of an Edge or agreement corporation could fund its subsidiary during the day over Fedwire or the parent could substitute itself for its subsidiary on private systems. Such an approach by the parent could both reduce systemic risk exposure and permit the Edge or agreement corporation to continue to service its customers. Edge and agreement corporation subsidiaries of foreign banking organizations are treated in the same manner as their domestically owned counterparts.

2. Bankers' Banks

Bankers banks [26] are exempt from reserve requirements and do not have regular access to the discount window. They do, however, have access to Federal Reserve payment services. The Board's policy provides that bankers' banks should refrain from incurring daylight overdrafts and post collateral to cover any overdrafts they do incur. In addition to posting collateral, a bankers' bank would be subject to the daylight-overdraft penalty fee levied against the average daily daylight overdrafts incurred by the institution, as described above.

The Board's policy for bankers' banks reflects the Reserve Banks' need to protect themselves from potential losses resulting from daylight overdrafts incurred by bankers' banks. The policy also considers the fact that some bankers' banks do not incur the costs of maintaining reserves as do other depository institutions and do not have regular access to the discount window.

Bankers' banks may voluntarily waive their exemption from reserve requirements, thus gaining access to the discount window. Such bankers' banks are free to establish net debit caps and would be subject to the same policy as other depository institutions. The policy set out in this section applies only to those bankers' banks that have not waived their exemption from reserve requirements.

3. Limited-Purpose Trust Companies [27]

The Federal Reserve Act permits the Board to grant Federal Reserve membership to limited-purpose trust companies subject to conditions the Board may prescribe pursuant to the Act. As a general matter, member limited-purpose trust companies do not accept reservable deposits, do not have regular discount-window access, and may not incur daylight overdrafts.

Limited-purpose trust companies are subject to the same daylight-overdraft penalty rate as other institutions that do not maintain reserves and do not have regular discount-window access. Limited-purpose trust companies should refrain from incurring overdrafts and should post collateral to cover any overdrafts they do incur.

4. Problem Institutions

For depository institutions that are in weak financial condition, the Reserve Banks will impose a zero cap. The Reserve Bank will also monitor the institution's activity in real time and reject or delay certain transactions that would create an overdraft. Problem institutions should refrain from incurring daylight overdrafts and must post collateral to cover any daylight overdrafts they do incur.

F. Monitoring

1. Ex Post

Under the ex post monitoring procedures, an institution with a daylight overdraft in excess of its maximum daylight overdraft capacity or net debit cap may be contacted by its Reserve Bank.[28] The Reserve Bank may counsel the institution, discussing ways to reduce its excessive use of intraday credit. Each Reserve Bank retains the right to protect its risk exposure from individual institutions by unilaterally reducing net debit caps, imposing collateralization or clearing-balance requirements, rejecting or delaying certain transactions during the day until the institution has collected balances in its Federal Reserve account, or, in extreme cases, taking the institution off line or prohibiting it from using Fedwire.

2. Real Time

A Reserve Bank will apply real-time monitoring to an individual institution's position when the Reserve Bank believes that it faces excessive risk exposure, for example, from problem banks or institutions with chronic overdrafts in excess of what the Reserve Bank determines is prudent. In such a case, the Reserve Bank will control its risk exposure by monitoring the institution's position in real-time, rejecting or delaying certain transactions that would exceed the institution's maximum daylight overdraft capacity or net debit cap, and taking other prudential actions, including requiring collateral.[29]

[25] These institutions are organized under section 25A of the Federal Reserve Act (12 U.S.C. 611–631) or have an agreement or undertaking with the Board under section 25 of the Federal Reserve Act (12 U.S.C. 601–604a).

[26] For the purposes of this policy statement, a bankers' bank is a depository institution that is not required to maintain reserves under the Board's Regulation D (12 CFR 204) because it is organized solely to do business with other financial institutions, is owned primarily by the financial institutions with which it does business, and does not do business with the general public. Such bankers' banks also generally are not eligible for Federal Reserve Bank credit under the Board's Regulation A (12 CFR 201.2(c)(2)).

[27] For the purposes of this policy statement, a limited-purpose trust company is a trust company that is a member of the Federal Reserve System but that does not meet the definition of ''depository institution'' in section 19(b)(1)(A) of the Federal Reserve Act (12 U.S.C. 461(b)(1)(A)).

[28] Even if the institution is not a state member bank, the Reserve Bank can make this contact when an overdraft occurs in a Federal Reserve account or when the institution is in a net debit position on a system that settles on the books of the Federal Reserve.

[29] Depository institutions that are monitored in real time must fund the total amount of their ACH credit originations when the transactions are processed by the Federal Reserve, even if those transactions are processed one or two days before settlement.

3. Multi-District Institutions

Depository institutions, such as those maintaining merger-transition accounts and U.S. branches and agencies of a foreign bank, that access Fedwire through accounts in more than one Federal Reserve District are expected to manage their accounts so that the total daylight overdraft position across all accounts does not exceed their net debit caps. One Reserve Bank will act as the administrative Reserve Bank and will have overall risk-management responsibilities for institutions maintaining accounts in more than one Federal Reserve District. In the case of families of U.S. branches and agencies of the same foreign banking organization, net debit cap compliance will be monitored by the Reserve Bank that exercises the Federal Reserve's oversight responsibilities under the International Banking Act.[30] The administrative Reserve Bank may determine, in consultation with Reserve Banks in whose territory other U.S. agencies or branches of the same foreign bank are located and with the management of the foreign bank's U.S. operations, that branches and agencies outside its District either will not be permitted to incur overdrafts in Federal Reserve accounts or will be required to allocate part or all of the foreign family's net debit cap (and the responsibility for administering part or all of the collateral requirement) to a Reserve Bank in whose District one or more of the foreign offices operate.[31] For domestic depository institutions that have branches in multiple Federal Reserve Districts, the administrative Reserve Bank generally will be the Reserve Bank where the head office of the bank is located.

[30] 2 USC 3101–3108.

[31] As in the case of Edge and agreement corporations and their branches, with the approval of the designated administrative Reserve Bank, a second Reserve Bank may assume the responsibility of managing and monitoring the net debit cap of particular foreign branch and agency families. This would often be the case when the payments activity and national administrative office of the foreign branch and agency family is located in one District, while the oversight responsibility under the International Banking Act is in another District. If a second Reserve Bank assumes management responsibility, monitoring data will be forwarded to the designated administrator for use in the supervisory process.

G. Transfer-Size Limit on Book-Entry Securities

Secondary-market book-entry securities transfers on Fedwire are limited to a transfer size of $50 million par value. This limit is intended to encourage partial deliveries of large trades in order to reduce position building by dealers, a major cause of book-entry securities overdrafts before the introduction of the transfer-size limit and daylight overdraft fees. This limitation does not apply to either of the following:

a. Original issue deliveries of book-entry securities from a Reserve Bank to a depository institution.

b. Transactions sent to or by a Reserve Bank in its capacity as fiscal agent of the United States, government agencies, or international organizations.

Thus, requests to strip or reconstitute Treasury securities or to convert bearer or registered securities to or from book-entry form are exempt from this limitation. Also exempt are pledges of securities to a Reserve Bank as principal (for example, discount-window collateral) or as agent (for example, Treasury Tax and Loan collateral).

By order of the Board of Governors of the Federal Reserve System, December 10, 2001.

Jennifer J. Johnson,

Secretary of the Board.

[FR Doc. 01–30811 Filed 12–12–01; 8:45 am]

BILLING CODE 6210–01–P

DEPARTMENT OF HEALTH AND HUMAN SERVICES

Centers for Disease Control and Prevention

[30DAY–10–02]

Agency Forms Undergoing Paperwork Reduction Act Review

The Centers for Disease Control and Prevention (CDC) publishes a list of information collection requests under review by the Office of Management and Budget (OMB) in compliance with the Paperwork Reduction Act (44 U.S.C. chapter 35). To request a copy of these requests, call the CDC Reports Clearance Officer at (404) 639–7090. Send written comments to CDC, Desk Officer, Human Resources and Housing Branch, New Executive Office Building, Room 10235, Washington, DC 20503. Written comments should be received within 30 days of this notice.

Proposed Project: Contents of a Request for a Health Hazard Evaluation (OMB No. 0920–0102)—Extension—The National Institute for Occupational Safety and Health (NIOSH), Centers for Disease Control and Prevention (CDC). The mission of the National Institute for Occupational Safety and Health is to promote safety and health at work for all people through research and prevention.

Each year, in accordance with its mandates under the Occupational Safety and Health Act of 1970 and the Federal Mine Safety and Health Act of 1977, the National Institute for Occupational Safety and Health (NIOSH) responds to approximately 450 requests for health hazard evaluations to identify potential chemical, biological or physical hazards at the workplace. A printed NIOSH form is available for requesting these health hazard evaluations. The form is also available on the Internet and differs from the printed version only in format and in the fact that it uses an Internet address to which recipients can submit the form to NIOSH. Both the printed and Internet versions of the form provide the mechanism for employees, employers, and other authorized representatives to supply the information required by the regulations which govern the NIOSH health hazard evaluation program (42 CFR 85.3–1). In general, if employees are submitting the form it must contain the signatures of three or more current employees. However, regulations allow a single signature if the requestor is one of three (3) or fewer employees in the process, operation, or job of concern. It takes approximately six (6) NIOSH employees about five (5) minutes to evaluate the submitted form. The information provided is used by NIOSH to determine whether there is reasonable cause to justify conducting an investigation. The purpose of investigations conducted in the health hazard evaluation program is to help employers and employees identify and eliminate occupational health hazards. Without the information requested on this form, NIOSH would be unable to perform its legislated function of conducting health hazard evaluations in workplaces. The total annualized burden for this data collection is 90 hours.

Respondents	Number of respondents	Number of responses per respondent	Avg. burden per response (in hrs.)
Employees and Representatives	290	1	12/60
Employers	160	1	12/60

Dated: December 5, 2001.

Nancy E. Cheal,

Acting Associate Director for Policy, Planning and Evaluation, Centers for Disease Control and Prevention.

[FR Doc. 01–30759 Filed 12–12–01; 8:45 am]

BILLING CODE 4163–18–P

DEPARTMENT OF HEALTH AND HUMAN SERVICES

Centers for Disease Control and Prevention

[30 DAY–02–02]

Agency Forms Undergoing Paperwork Reduction Act Review

The Centers for Disease Control and Prevention (CDC) publishes a list of information collection requests under review by the Office of Management and Budget (OMB) in compliance with the Paperwork Reduction Act (44 U.S.C. chapter 35). To request a copy of these requests, call the CDC Reports Clearance Officer at (404) 639–7090. Send written comments to CDC, Desk Officer, Human Resources and Housing Branch, New Executive Office Building, Room 10235, Washington, DC 20503. Written comments should be received within 30 days of this notice.

Proposed Project: Willingness to Pay Project—NEW—Epidemiology Program Office (EPO), Centers for Disease Control and Prevention (CDC). The mission of the Prevention Effectiveness Branch is to provide information and training to build internal and external capacity in economic and decision sciences.

This project will use qualitative and quantitative research to develop and test informational approaches (educational materials or product labeling) to educate consumers about food safety issues, develop and test survey instruments and test experimental protocols to be used in the main quantitative data collection; provide a nationally-representative estimate of consumer willingness to pay for (a) Publicly-provided reductions in the probability of contracting foodborne illnesses; (b) reductions in severity of symptoms associated with foodborne illnesses, and (c) materials that facilitate private, defensive precautions against foodborne illness during home food preparation (*e.g.,* meat thermometers, antibacterial soaps and cutting boards). Estimate the effect of education programs and product labeling on willingness to pay for the reductions; compare the empirical estimates of the above mentioned consumer willingness to pay derived from a conjoint analysis instrument and a simulated marketplace experiment.

Public awareness and stated concern regarding foodborne illnesses have increased rapidly over the past decade. The general public, while seemingly well-informed and concerned about some relevant food safety issues, appear unknowledgeable or ill-informed about emerging issues. *The Food Safety Survey* data suggest that information provided to consumers at the point of purchase may be a fruitful means of educating the public about food safety, and analyses of consumer purchase data indicate that health-related information provided at the point of purchase can make significant long-term changes in purchasing behavior.

While providing health-related information about food has been the focus of major policy initiatives in the last few years, little empirical economic research has attempted to understand the market and welfare effects of different health information policies. In addition, previous research does not address the distribution of effects across different consumers. Policy makers and food manufacturers cannot provide labels that satisfy everyone's information desires while simultaneously catering to consumers' cognitive and time constraints. As a result, policy makers need to understand how different sectors of the consumer population will be affected, particularly those members of the population who face relatively high food safety risks.

The lack of information hinders policy makers from making informed decisions on the proper allocation of resources in this area since the benefits or reducing the risk of illness are not well known. Not having the information readily available makes cost-effectiveness and cost-benefit analyses difficult to do as well as resource-intensive. This data collection effort will reduce this burden by making data available to researchers for use in program and policy evaluation. If this data collection effort were not to take place, agencies will either have to continue to piece together data when conducting economic analyses of food safety policies and regulations, or they will fund a large-scale effort like the one being proposed. Another large-scale effort would be a waste of public funds. Providing consumers information about the risks and about protective measures allows consumers to more accurately assess how much they would pay for reductions in this risk, but more importantly, it also informs the consumer as to what the risks are and how they can protect themselves. This information is important since the consumer is the last line of defense in the campaign against foodborne illnesses. The total estimated burden is 1500 hours.

Respondents	Number of respondents	Number of responses per respondent	Average burden per response (in hours)
Survey respondents	3300	1	20/60
Virtual shopping respondents	600	1	40/60

Dated: December 5, 2001.

Nancy E. Cheal,

Acting Associate Director for Policy, Planning and Evaluation, Centers for Disease Control and Prevention.

[FR Doc. 01–30760 Filed 12–12–01; 8:45 am]

BILLING CODE 4163–18–P

DEPARTMENT OF HEALTH AND HUMAN SERVICES

Centers for Disease Control and Prevention

[30DAY–09–02]

Agency Forms Undergoing Paperwork Reduction Act Review

The Centers for Disease Control and Prevention (CDC) publishes a list of information collection requests under review by the Office of Management and Budget (OMB) in compliance with the Paperwork Reduction Act (44 U.S.C. chapter 35). To request a copy of these requests, call the CDC Reports Clearance Officer at (404) 639–7090. Send written comments to CDC, Desk Officer, Human Resources and Housing Branch, New Executive Office Building, Room 10235, Washington, DC 20503. Written comments should be received within 30 days of this notice.

Proposed Project: NIOSH Website for Kids and Teens—New—The National Institute for Occupational Safety and Health (NIOSH), Centers for Disease Control and Prevention (CDC). The mission of the National Institute for Occupational Safety and Health is to promote safety and health at work for all people through research and prevention.

The goal of this project is to develop a more effective means of communicating NIOSH occupational safety and health (OSH) information to youth via the *NIOSH Website for Kids and Teens.* NIOSH research indicates that approximately 80% of youths are employed at some point before they leave high school. Research also indicates that despite being prevented by child labor laws from engaging in the most dangerous occupations, teens have a higher rate of injury per hour worked than adults. Each year, 70 teens die from work injuries. Another 200,000 are injured on the job each year. Of these, about 100,000 are injured seriously enough to require emergency room treatment.

This project will identify effective promotional methods to assure a high level of awareness of the *NIOSH Website for Kids and Teens* among youth and to generate a high volume of first-time visitors to the website. This project will also develop enhanced website content to increase the relevance of the *NIOSH Website for Kids and Teens* for the youth audience and to insure repeated visits to the website. The Theory of Planned Behavior (TPB) will be used to guide the assessment of youth attitudes and intentions regarding the usage of an OSH website. This information will be used to tailor promotional messages to increase their appeal to youth who report that they would not be likely to visit an OSH website. The effectiveness of the tailored promotional messages will be contrasted with that of untailored messages.

Due to significant differences in cognitive and emotional development, the youth audience targeted by this study will be segmented into three age groups, 5–8, 9–14, and 15–19. These age groups roughly correspond to elementary, middle, and high school. Different website content will be developed for each age group.

Since youth from rural and urban backgrounds have different opportunities for employment, it is expected that youth from these two areas will have different OSH information needs. This study will recruit representative samples of youth from both rural and urban areas. Differences found between youth from these two areas will be used to tailor website content for each group. The impact of this tailoring will be assessed by systematically matching and mismatching this tailored content with representative samples of youth from each area.

The aims of this project will be accomplished in three phases: (1) Representative samples from each of three targeted age groups (5–8, 9–14, 15–19) will be surveyed regarding their preferences for website content, style, promotional channels, behavioral intentions, behavioral norms, and perceived behavioral constraints; (2) Pretesting of enhanced OSH website content and format developed by this study on representative samples of the targeted age groups and of promotional materials; (3) A promotional campaign using a 3 (elementary, middle, and high school age groups) × 2 (tailored promotional messages, untailored promotional messages) × 2 (rural, urban) design. Promotional messages will be placed in venues (such as magazines or television programs) that have youth oriented content. The effectiveness of these promotional channels and messages will be determined by monitoring the volume of visits to the respective internet portal pages for the *NIOSH Website for Kids and Teens.* The total estimated burden is 3,000 hours.

Type of survey	Type of respondents	Number of respondents	Number of responses/respondent	Avg. burden/response (in hrs.)
Audience Need Preference Survey	Elementary, and middle, and high school students.	750	1	2
Pretesting	Elementary, middle, and high school students.	750	1	2

Dated: December 5, 2001.

Nancy E. Cheal,

Acting Associate Director for Policy, Planning and Evaluation, Centers for Disease Control and Prevention.

[FR Doc. 01–30761 Filed 12–12–01; 8:45 am]

BILLING CODE 4163–18–P

DEPARTMENT OF HEALTH AND HUMAN SERVICES

Centers for Disease Control and Prevention

[30DAY–06–02]

Agency Forms Undergoing Paperwork Reduction Act Review

The Centers for Disease Control and Prevention (CDC) publishes a list of information collection requests under review by the Office of Management and Budget (OMB) in compliance with the Paperwork Reduction Act (44 U.S.C. Chapter 35). To request a copy of these requests, call the CDC Reports Clearance Officer at (404) 639–7090. Send written comments to CDC, Desk Officer, Human Resources and Housing Branch, New Executive Office Building, Room 10235, Washington, DC 20503. Written

comments should be received within 30 days of this notice.

Proposed Project: National Survey of Endoscopic Capacity (SECAP)—New—National Center for Chronic Disease Prevention and Health Promotion (NCCDPHP), Centers for Disease Control and Prevention (CDC), proposes to conduct a study to provide a national assessment of the current capacity to conduct colorectal cancer (CRC) screening and follow-up examinations for average risk persons aged 50 and older. Colorectal cancer is the second leading cause of cancer-related deaths in the United States. While there is strong scientific evidence that screening for CRC reduces incidence and mortality from this disease, rates of use of screening tests are currently low. Efforts to promote widespread screening for CRC are intensifying among local, state, and federal health agencies and professional organizations nationwide. However, limited information is available regarding the number of health care personnel currently trained and available to perform screening and follow-up examinations.

The proposed study will be conducted through the implementation of a survey which will be mailed to a random sample of 1,800 providers known to possess flexible sigmoidoscopes and colonoscopes, based upon lists provided by major endoscopic equipment manufacturers. The sampling frame will be designed to include providers from all regions of the country and all physician specialists who may be screening for CRC. The survey will provide information on the types of health care providers who are performing CRC screening and follow-up examinations, the equipment currently being used for screening and follow-up examinations, and current reimbursement rates for these tests. The results of the analysis will be used to (1) Identify deficits in the medical infrastructure, (2) guide the development of training initiatives and educational programs for health care providers, and (3) provide critical baseline information for local, state and federal policy makers for the planning of national initiatives to increase colorectal cancer screening.

The total annualize burden for this data collection is 880 hours.

Respondents	Number of respondents	Responses per respondent	Hours per response
Screening Phone Call	1,800	1	5/60
Mailed Survey	1,750	1	25/60

Dated: December 5, 2001.

Nancy E. Cheal,

Acting Associate Director for Policy, Planning, and Evaluation, Centers for Disease Control and Prevention.

[FR Doc. 01–30762 Filed 12–12–01; 8:45 am]

BILLING CODE 4163–18–P

DEPARTMENT OF HEALTH AND HUMAN SERVICES

Centers for Disease Control and Prevention

[30DAY–54–01]

Agency Forms Undergoing Paperwork Reduction Act Review

The Centers for Disease Control and Prevention (CDC) publishes a list of information collection requests under review by the Office of Management and Budget (OMB) in compliance with the Paperwork Reduction Act (44 U.S.C. Chapter 35). To request a copy of these requests, call the CDC Reports Clearance Officer at (404) 639–7090. Send written comments to CDC, Desk Officer, Human Resources and Housing Branch, New Executive Office Building, Room 10235, Washington, DC 20503. Written comments should be received within 30 days of this notice.

Proposed Project: An Assessment of the Feasibility and Need for Support of Cervical Cancer Screening Services in Publicly Funded Sexually Transmitted Disease (STD) Clinics—New—National Center for Chronic Disease Prevention and Health Promotion (NCCDPHP), Centers for Disease Control Prevention (CDC).

The National Center for Chronic Disease Prevention and Health Promotion, Division of Cancer Prevention and Control (DCPC) in collaboration with the National Center for HIV, STD, and TB Prevention, Division of STD Prevention proposes to evaluate the need for and suitability of delivering cervical cancer screening services to women receiving health care in public STD clinics. STD clinics provide health services to a population of women considered to be at high risk for human papillomavirus (HPV) infection. Certain HPV types cause abnormal Pap smears and are etiologically linked to cervical cancer. Many women who seek medical attention from STD clinics have limited access to other sources of health care. Moreover, there is limited published information about the cervical cancer screening behaviors or magnitude of cervical dysplasia in this at-risk population. CDC is conducting this project in response to a Congressional mandate encouraging the exploration of alternative strategies and methods to increase access to cervical cancer screening services among medically underserved women.

To determine if STD clinics are an appropriate venue to identify women in need of cervical cancer screening services, DCPC will recruit and enroll a projected sample of 22,680 women attendees of eight publicly funded clinics. Four of the participating clinics will offer cervical cancer screening services and four will not provide these services. To estimate the need for cervical cancer screening among STD clinic attendees, women who meet the project enrollment criteria at all participating clinics will be asked to participate in a brief interview regarding their recent cervical cancer screening history and their need for screening.

For women attending publicly funded STD clinics offering cervical cancer screening services, data will be collected on the results of the screening examination, results of the diagnostic assessments of abnormal screening tests, and the costs associated with cervical cancer screening and follow-up. For women attending clinics not offering cervical cancer screening, attendees determined to be in need of screening will be referred to local providers offering these services.

A sub-study, verifying attendees reports of recent cervical screening services will be conducted on a sample of clinic attendees. Official Pap smear reports will be collected for those women who indicate a Pap smear was performed during the preceding 12 months. Clinic staff and health care provider activities will involve interviewing attendees, determining attendees eligibility status, and verifying Pap test results. The total annualized burden for this data collection is 9,969 hours.

Respondents	Activity	Number of respondents	Number of responses per respondent	Average burden per response (in hrs.)
STD clinic clients—one time visit	Screening	22,680	1	5/60
	Consent Form	18,144	1	5/60
	Survey	18,144	1	10/60
	Release Form	8,709	1	5/60
Repeat STD clinic clients	Screening	2,250	2	5/60
	Consent Form	2,016	2	5/60
	Survey—1st visit	2,016	1	10/60
	Survey—2nd visit	2,016	1	5/60
	Release Form	968	1	5/60
Healthcare Providers	Copy/mail reports	7,742	1	10/60
Clinic Staff— Baseline Visit	1st meeting	10	8	30/60
	Clinic Dir.	1	8	120/60
	Med. Director	1	8	30/60
	Provider	3	8	30/60
	Outreach staff	3	8	30/60
	Clerical	3	8	30/60
Clinic Staff—4 followup visits—clinic performing cervical cancer screening.	1st meeting	10	4	30/60
	Clinic Dir.	1	4	120/60
	Medical Dir.	1	4	30/60
	Provider	3	4	30/60
	Outreach staff	3	4	30/60
	Clerical	2	4	60/60
Clinic Staff—4 followup visits—clinic not performing cervical cancer screening.	1st meeting	10	4	30/60
	Clinic Dir.	1	4	60/60
	Medical Dir.	1	4	30/60
	Provider	2	4	30/60
	Outreach staff	1	4	30/60
	Clerical	1	4	60/60

Dated: December 5, 2001.

Nancy E. Cheal,

Acting Associate Director for Policy, Planning and Evaluation, Centers for Disease Control and Prevention.

[FR Doc. 01–30763 Filed 12–12–01; 8:45 am]

BILLING CODE 4163–18–P

DEPARTMENT OF HEALTH AND HUMAN SERVICES

Administration for Children and Families

[Program Announcement No. OCS–02–03]

Fiscal Year 2002 Family Violence Prevention and Services Discretionary Funds Program; Availability of Funds and Request for Applications

AGENCY: Office of Community Services, ACF, DHHS.

ACTION: Announcement of the availability of funds and request for applications under the Office of Community Services Family Violence Prevention and Services Discretionary Funds Program.

SUMMARY: The Office of Community Services (OCS) announces its Family Violence Prevention and Services discretionary funds program for fiscal year (FY) 2002. Funding for grants under this announcement is authorized by the Family Violence Prevention and Services Act, Public Law 102–295, as amended, governing discretionary programs for family violence prevention and services. Applicants should note that the award of grants under this program announcement is subject to the availability of funds. This announcement contains all forms and instructions for submitting an application.

CLOSING DATE: The closing date for submission of applications is February 11, 2002. Applications postmarked after the closing date will be classified as late. Applicants are cautioned to request a legibly dated U.S. Postal Service postmark or to obtain a legibly dated receipt from a commercial carrier or U.S. Postal Service. Private metered postmarks shall not be accepted as proof of timely mailing. Detailed application submission instructions, including the addresses where applications must be received, are found in Part IV of this announcement.

Hand delivered applications are accepted during the normal working hours of 8 a.m. to 4:30 p.m. EST at the Family Violence Operations Center: 1815 North Fort Myer Drive, Suite 300, Arlington, VA 22209 between Monday and Friday (excluding Federal holidays). (Applicants are cautioned that express/overnight mail services do not always deliver as agreed.)

MAILING ADDRESS: Applications should be mailed to Family Violence Operations Center, 1815 North Fort Myer Drive, Suite 300, Arlington, VA 22209; Attention: Application for Family Violence Prevention and Services Program.

Number of Copies Required: One signed original application and four copies are required at the time of initial submission. (OMB–0970–0062, expiration date 01/29/2002.)

Acknowledgement of Receipt: An acknowledgement will be mailed to all applicants with an identification number which will be noted on the acknowledgement. This number must be referred to in all subsequent communications with OCS concerning the application. If an acknowledgment is not received within three weeks after the application deadline, applicants must notify the Family Violence Operations Center by telephone at (703) 351–7676. The applicant should also submit a mailing label for the acknowledgement.

Note: To facilitate receipt of this acknowledgement from ACF, applicant should include a cover letter with the application containing an e-mail address and

facsimile (FAX) number if these items are available to the applicant.

FOR FURTHER INFORMATION CONTACT: Administration for Children and Families, Office of Community Services, Division of State Assistance, 370 L'Enfant Promenade, SW, Washington, DC 20447. Telephone Sunni Knight, (202) 401–5319, James Gray, (202) 401–5705, William Riley (202) 401–5529, or Shena Williams, (202) 205–5932.

For a Copy of the Announcement Contact: Administration for Children and Families, Office of Community Services, 370 L'Enfant Promenade, SW., Washington, DC, 20447. Telephone Shena Williams, (202) 205–5932. Our Web site address is: *http://www.acf.dhhs.gov/programs/ocs* under ''Funding Opportunities''.

SUPPLEMENTARY INFORMATION: The Office of Community Services, Administration for Children and Families, announces that applications are being accepted for funding for FY 2002 projects on:

FV–01–01—Public Information/Community Awareness Campaign Projects for the Prevention of Family Violence; and

FV–02–02—Collaborative Efforts between Faith-Based Organizations and Domestic Violence Organizations.

This program announcement consists of four parts:

Part I provides information on the family violence prevention and services program and the statutory funding authority applicable to this announcement.

Part II describes the priority areas under which applications for FY 2002 family violence funding are being requested.

Part III describes the applicable evaluation criteria.

Part IV provides other information and instructions for the development and submission of applications.

Part I. Introduction

Title III of the Child Abuse Amendments of 1984, (Pub. L. 98–457, 42 U.S.C. 10401, *et seq.*) is entitled the Family Violence Prevention and Services Act (the Act). The Act was first implemented in FY 1986, was reauthorized and amended in 1992 by Pub. L. 102–295, and was amended and reauthorized for fiscal years 1996 through 2000 by Pub. L. 103–322, the Violent Crime Control and Law Enforcement Act of 1994 and by Pub. L. 104–235, the ''Child Abuse Prevention and Treatment Act Amendment of 1996.'' The Act was most recently amended by the ''Victims of Trafficking and Violence Protection Act of 2000'' (Pub. L. 106–386, 10/28/2000).

The purpose of this legislation is to assist States in supporting the establishment, maintenance, and expansion of programs and projects to prevent incidents of family violence and provide immediate shelter and related assistance for victims of family violence and their dependents.

We expect to fund two priority areas in FY 2002:

Public Information/Community Awareness Campaign Projects for the Prevention of Family Violence

1. The purpose of the public information/community awareness projects is to assist in the continued development of state/local public information and community awareness campaign projects and activities that assist in preventing family violence. These projects should provide information on resources, facilities, other individuals seeking assistance, and service alternatives available to family violence victims and their dependents, community organizations, local school districts, and others.

Collaborative Efforts Between Faith-Based Organizations and Domestic Violence Organizations

2. The purpose of this priority area is to support collaborative efforts that would enhance the response to a battered woman whose initial point of contact for help was with a member of a faith-based organization. Further, this priority area seeks to support the development of credible and helpful information from faith-based organizations in order to increase the involvement and leverage from this vital segment of the community.

Part II. Fiscal Year 2002 Family Violence Projects

1. Priority Area FV01–01. Public Information and/or Community Awareness Campaign Projects for the Prevention of Family Violence

Background

Based on the positive response to prior year public information and community awareness grants, ACF will again make these grants available in FY 2002.

Previous public information/community awareness grants have stimulated the development of a number of very effective informational programs and activities at the local levels. They have assisted community organizations to focus on and emphasize prevention; helped make available public service announcements and descriptive program brochures in several different languages, including Russian and Vietnamese; and assisted in the implementation of conflict resolution activities in elementary, middle, and high school curricula. The continuation of these grant awards will help assure that individuals, particularly those within minority communities, are aware of available alternatives and resources for the intervention and prevention of family violence.

This priority area requires the development and implementation of an effective public information campaign that may be used, for example, by public and private agencies, schools, churches, boys and girls clubs, community organizations, and individuals.

Accurate information is critical to any community awareness strategy and activity. How information is communicated must be modified where communication barriers may exist because of perceived or real language differences and cultural insensitivity. OCS seeks to continue to provide victims, their dependents, perpetrators, and others in the community with knowledge of the service options available.

Eligible Applicants

State and local public agencies, Territories, and Native American Tribes and Tribal Organizations who are, or have been, recipients of Family Violence Prevention and Services Act grants; State and local private non-profit agencies experienced in the field of family violence prevention; and public and private non-profit educational institutions, community organizations, community-based coalitions, faith-based organizations, and other entities that have designed and implemented family violence prevention information activities or community awareness strategies.

Minimum Requirements for Project Design

In order to successfully compete under the priority area, the applicant should:

- Present a plan for community awareness and public information activities that clearly reflects how the applicant will target the populations at risk, including pregnant women; coordinate its implementation efforts with public agencies and other community organizations; and communicate with institutions active in the field of family violence prevention.
- Describe the proposed approach to the development of a public information campaign and identify the specific audience(s), community(s), and groups that will be targeted, including

communities and groups with the highest prevalence of domestic violence.

Include, as critical elements in the plan:

- A set of achievable objectives and a description of the population groups, relevant geographic area, and the indicators to be used to measure progress and the overall effectiveness of the campaign;
- The intended strategies for test marketing the development plans, and assurances that effectiveness criteria will be implemented prior to the completion of the final plan;
- The development and use of non-traditional sources as community awareness or information providers (applicants should present specific plans for the use of local organizations, businesses and individuals in the distribution of information and materials);
- The identification of the media to be used in the campaign and the geographic limits of the campaign;
- How the applicant would be responsive and sensitive to minority communities and their cultural perspectives; and
- A description of the kind, volume, distribution, and timing of the proposed information with assurances that the public information campaign activities will not supplant or lower the current frequency of current public service announcements.

Project Duration

The length of the project should not exceed 12 months.

Federal Share of the Project

The maximum Federal share of the project will not exceed $35,000 for the 1-year project period. Applications for lesser amounts also will be considered under this priority area.

Matching Requirements

Successful applicants must provide at least 25 percent of the total cost of the project. The approved total cost of the project is the sum of the ACF share and non-Federal share. Applications for lesser amounts also will be considered under this priority area. Cash or in-kind contributions may meet the non-Federal share, although applicants are encouraged to meet their match requirements through cash contributions. If approved for funding, the applicant will be held accountable for commitments of non-Federal resources and failure to provide the required amount will result in a disallowance of unmatched Federal funds. Therefore, a project requesting $35,000 in Federal funds (based on an award of $35,000 per budget period) must include a match of at least $11,666 (25% of total project cost) for a total budget of $46,666.

Anticipated Number of Projects to be Funded

We anticipate that five projects will be funded at the maximum level. We may fund more than five projects if we receive acceptable applications for lesser amounts.

Priority Area FV–02–02, Collaborative efforts between Faith-Based/Spiritual Organizations and Domestic Violence Organizations

Background

For many women across varying social and economic strata, churches, synagogues, or places of contemplation and spiritual connection may be the only sources of safe and confidential interaction. However, even in these settings of assumed trust and confidentiality, many women who seek counseling are hesitant to expose the nature and extent of their abuse because of fear, shame, guilt, or feelings of human or spiritual failure. Additionally, spiritual leaders, though dedicated to the principles of respect and human dignity for all people, are sometimes unable to recognize the characteristics and results of abusive relationships. Even when recognized, they often lack the resources and information available to provide support that would ensure protection and safety through the resolution of the problem.

Establishing a collaborative effort between faith-based organizations and domestic violence intervention services will help provide organizations with information about the availability of domestic violence intervention services, effectively create additional points of entry to services for victims of family violence, and expand and strengthen the network of knowledgeable service providers.

Some suggested activities applicable under this priority area are:

(a) Plan and implement training and the development of training materials that enable leaders of faith-based organizations to increase the capacity of the faith-based community to understand and appropriately respond to the complexities of domestic violence.

(b) Plan and implement a replicable domestic violence collaborative project that provides information on resources, facilities, and service alternatives to family violence victims and their dependents for use by faith-based organizations.

(c) Plan and implement a domestic violence information and awareness project related to specific population groups such as youth, elderly, disabled, or gay/lesbian/transgender individuals that provide information on the services available to these groups for intervention and prevention.

Eligible Applicants

State and local private non-profit agencies experienced in the field of family violence prevention in collaboration with private non-profit faith-based organizations, public and private non-profit educational/faith-based institutions, associations, or societies, and other entities that have designed and implemented activities related to the prevention of domestic violence as a faith-based issue.

Minimum Requirements for Project Design

This project requires the collaboration between a recognized domestic violence service provider or state domestic violence coalition with a church, synagogue, mosque, faith-based or spiritually-based organization or an organization representing multiple churches, synagogues, mosques, and/or other faith-based entities. Applicant's proposal should include a description of the collaborating domestic violence service provider's organization, domestic violence service experience, and organizational affiliation with the domestic violence community.

The applicant's proposal should address the following:

Demonstrate that the required collaboration has occurred in the preparation and planned implementation of the activities specified in the grant application; and demonstrate that the developed materials and/or training will incorporate guiding principles similar to the following:

- The safety of victims and children is a priority;
- The integrity and authority of each battered woman over her own life is to be respected;
- Perpetrators, not victims, must be held responsible for the abuse and for stopping it; and
- The confidentiality of client information must be ensured.

Include, as critical elements in the plan:

- A set of identified objectives for training, outreach, and the development of training materials;
- Development of an approach and strategy that is useful in providing sensitive and responsive services and/or training.

• A description of the type, distribution and timing of information to be developed and distributed; and

• A description of any non-traditional informational sources, counseling practices, programs, or organizational linkages that might be utilized in the provision of services and information to persons in abusive situations who contact faith-based organizations.

Project Duration

The length of the project should not exceed 12 months.

Federal Share of the Project

The maximum Federal share of the project is not to exceed $37,500 for the 1-year project period. Applications for lesser amounts also will be considered under this priority area.

Matching Requirements

Successful applicants must provide at least 25 percent of the total cost of the project. The approved total cost of the project is the sum of the ACF share and non-Federal share. Cash or in-kind contributions may meet the non-Federal share although applicants are encouraged to meet their match requirements through cash contributions. If approved for funding, the applicant will be held accountable for commitments of non-Federal resources and failure to provide the required amount will result in a disallowance of unmatched Federal funds. Therefore, a project requesting $37,500 in Federal funds (based on an award of $37,500 per budget period) must include a match of at least $12,500 (25% of the total project cost) for a total budget of $50,000.

Anticipated Number of Projects To Be Funded

It is anticipated, subject to the availability of funds, that six projects will be funded at the maximum level; more than six projects may be funded depending on the number of acceptable applications for lesser amounts which are received.

Part III. Evaluation Criteria

Applicants must clearly identify the specific priority area under which they wish to have their applications considered, and tailor their applications accordingly. Previous experience has shown that an application which is broad and more general in concept than outlined in the priority area description is less likely to score as well as one which is more clearly focused and directly responsive to the concerns of that specific priority area.

Using the evaluation criteria below, a panel of at least three reviewers (primarily experts from outside the Federal government) will review each application. Applicants should ensure that they address each minimum requirement in the priority area description under the appropriate section of the Program Narrative Statement.

Reviewers will determine the strengths and weaknesses of each application in terms of the appropriate evaluation criteria listed below and provide comments and assign numerical scores. The point value following each criterion heading indicates the maximum numerical weight that each section may be given in the review process:

1. Need for the Project (10 points)

The extent to which the need for the project and the problems it will address have national and local significance; the applicability of the project to coordination efforts by national, Tribal, State and local governmental and non-profit agencies; its ultimate impact on domestic violence prevention services and intervention efforts, policies and practice; the relevance of other documentation as it relates to the applicant's knowledge of the need for the project; and the identification of the specific topic or program area to be served by the project. Maps and other graphic aids may be attached.

2. Goals and Objectives (10 points)

The extent to which the specific goals and objectives have national or local significance, the clarity of the goals and objectives as they relate to the identified need for and the overall purpose of the project, and their applicability to policy and practice. The provision of a detailed discussion of the objectives and the extent to which the objectives are realistic, specific, and achievable;

3. Approach (30 points)

The extent to which the application outlines a sound and workable plan of action pertaining to the scope of the project, and details about how the proposed work will be accomplished; relates each task to the objectives and identifies the key staff member who will be the lead person; provides a chart indicating the timetable for completing each task, the lead person, and the time committed; cites factors which might accelerate or decelerate the work, giving acceptable reasons for taking this approach as opposed to others; describes and supports any unusual features of the project, such as design or technological innovations, reductions in cost or time, or extraordinary social and community involvement; and provides for projections of the accomplishments to be achieved.

The extent to which, when applicable, the application describes the evaluation methodology that will be used to determine if the needs identified and discussed are being met and if the results and benefits identified are being achieved;

4. Results and Benefits (20 points)

The extent to which the application identifies the results and benefits to be derived; the extent to which they are consistent with the objectives of the application; the extent to which the application indicates the anticipated contributions to policy, practice, and theory; and the extent to which the proposed project costs are reasonable in view of the expected results. The extent to which the application has identified, in specific terms, the results and benefits specific for target groups and human service providers, to be derived from implementing the proposed project; and has described how the expected results and benefits will relate to previous demonstration efforts.

5. Level of Effort: (30 Points)

Staffing pattern—Describe the staffing pattern for the proposed project, clearly linking responsibilities to project tasks and specifying the contributions to be made by key staff.

Competence of staff—Describe the qualifications of the project team including any experiences working on similar projects. Also, describe the variety of skills to be used, relevant educational background, and the demonstrated ability to produce final results that are comprehensible and usable. One or two pertinent paragraphs on each key member are preferred to resumes. However, resumes may be included in the ten pages allowed for attachments/appendices.

Adequacy of resources—Specify the adequacy of the available facilities, resources and organizational experience with regard to the tasks of the proposed project. List the financial, physical and other resources to be provided by other profit and nonprofit organizations. Explain how these organizations will participate in the day to day operations of the project.

Budget—Relate the proposed budget to the level of effort required obtaining project objectives and providing a cost/benefit analysis. Demonstrate that the project's costs are reasonable in view of the anticipated results.

Collaborative efforts—Discuss in detail and provide documentation for

any collaborative or coordinated efforts with other agencies or organizations. Identify these agencies or organizations and explain how their participation will enhance the project. Letters from these agencies and organizations discussing the specifics of their commitment must be included in the application.

Authorship—The authors of the application must be clearly identified together with their current relationship to the applicant organization and any future project role they may have if the project is funded.

Applicants should note that non-responsiveness to the section designated as ''Minimum Requirements for Project Design,'' in the applicable priority areas, will result in a low evaluation score by the panel of expert reviewers.

CFDA: 93.592 Family Violence Prevention and Services: Family Violence Prevention and Services Act, as amended.

Part IV: Other Information and Instructions for the Development and Submission of Applications

A. Required Notification of the State Single Point of Contact

This program is covered under Executive Order 12372, (EO) ''Intergovernmental Review of Federal Programs,'' and 45 CFR part 100, ''Intergovernmental Review of Department of Health and Human Services Program and Activities.'' Under the EO, States may design their own processes for reviewing and commenting on proposed Federal assistance under covered programs.

All States and territories, except Alabama, Alaska, Colorado, Connecticut, Hawaii, Idaho, Kansas, Louisiana, Massachusetts, Minnesota, Montana, Nebraska, New Jersey, Oklahoma, Oregon, Pennsylvania, South Dakota, Tennessee, Vermont, Virginia, Washington, American Samoa and Palau, have elected to participate in the EO process and have established a Single Point of Contact (SPOCs). Applicants from these twenty-three jurisdictions need take no action regarding EO 12372. Applicants for projects to be administered by Federally recognized Indian Tribes are also exempt from the requirements of EO 12372. Otherwise, applicants should contact their SPOCs as soon as possible to alert them of the prospective applications and receive any necessary instructions. Applicants must submit any required material to the SPOCs as soon as possible so that OCS can obtain and review SPOC comments as part of the award process. It is imperative that the applicant submit all required materials, if any, to the SPOC and indicate the date of this submittal (or the date of contact if no submittal is required) on the Standard Form 424, item 16a.

Under 45 CFR 100.8(a)(2), a SPOC has 60 days from application deadline to comment on proposed new or competing continuation awards.

SPOCs are encouraged to eliminate the submission of routine endorsements as official recommendations. Additionally, SPOCs are requested to differentiate clearly between mere advisory comments and those official State process recommendations that may trigger the ''accommodate or explain'' rule.

When comments are submitted directly to ACF, they should be addressed to: Department of Health and Human Services, Administration for Children and Families, Office of Grants Management/OCSE, 4th Floor Aerospace Center, 370 L'Enfant Promenade, SW, Washington, DC 20447.

A list of the Single Point of Contact for each State and Territory is included at the end of this announcement.

B. Paperwork Reduction Act of 1995

Under the Paperwork Reduction Act of 1995, Public Law 104–13, the Department is required to submit to the Office of Management and Budget (OMB) for review and approval any reporting and recordkeeping requirements in regulations, including program announcements. This program announcement does not contain information requirements beyond those approved for ACF grant applications under OMB Control Number 0970–0062. An agency may not conduct or sponsor and a person is not required to respond to, a collection of information unless it displays a currently valid OMB control number.

C. Deadline for Submittal of Applications

The closing date and time for submittal of applications under this program announcement is found at the beginning of this program announcement under **CLOSING DATE.**

ACF cannot accommodate transmission of applications by fax or through other electronic media. Therefore, applications transmitted to ACF electronically will not be accepted regardless of the date or time of submission and time of receipt.

Late applications: Applications, which do not meet the criteria above, are considered late applications. The ACF shall notify each late applicant that its application will not be considered in the current competition.

Extension of deadlines: ACF may extend the deadline for all applicants due to acts of God, such as floods, hurricanes or earthquakes; widespread disruption of the mails; or if ACF determines a deadline extension to be in the best interest of the Government. However, if ACF does not extend the deadline for all applicants, it may not waive or extend the deadline for any applicant.

D. Instructions for Preparing the Application and Completing Application Forms

1. SF 424

Single-sided copies of SF should be used.

At the top of the Cover Page of the SF 424, enter the single priority area number under which the application is being submitted. An application should be submitted under only one priority area.

2. SF 424A Budget Information—Non-Construction Programs

With respect to the 424A, Budget Information—Non-Construction Programs, Sections A, B, C, E, and F are to be completed. Section D does not need to be completed.

In order to assist applicants in correctly completing the SF 424 and 424A, detailed instructions for completing these forms are contained on the forms themselves. See the Instructions accompanying SF 424A, as well as the instructions set forth below.

Section A—Budget Summary

Lines 1–4:

Column (a) Line 1—Enter OCS FVPS Program.

Column (b) Line 1—Enter 93.592.

Columns (c) and (d)—Not Applicable.

Columns (e), (f) and (g)—For lines 1 through 4, enter in appropriate amounts needed to support the project for the entire project period.

Line 5:

Enter the figures from Line 1 for all columns completed, (e), (f), and (g).

Section B—Budget Categories

This section should contain entries for OCS funds only. For all projects, the first budget period will be entered in Column (1).

Allocability of costs is governed by applicable cost principles set forth in the Code of Federal Regulations (CFR), Title 45, parts 74 and 92.

Budget estimates for administrative costs must be supported by adequate detail for the grants officer to perform a cost analysis and review. Adequately detailed calculations for each budget object class are those which reflect

estimation methods, quantities, unit costs, salaries, and other similar quantitative detail sufficient for the calculation to be duplicated. For any additional object class categories included under the object class *other*, identify the additional object class(es) and provide supporting calculations.

Supporting narratives and justifications are required for each budget category, with emphasis on unique/special initiatives; large dollar amounts; local, regional, or other travel; new positions; major equipment purchases; and training programs.

A detailed itemized budget with a separate budget justification for each major item should be included as indicated below:

Line 6a:

Personnel—Enter the total costs of salaries and wages.

Justification—Identify the project director and staff. Specify by title or name the percentage of time allocated to the project, the individual annual salaries and the cost to the project (both Federal and non-Federal) of the organization's staff who will be working on the project.

Line 6b:

Fringe Benefits—Enter the total costs of fringe benefits unless treated as part of an approved indirect cost rate, which is entered on Line 6j.

Justification—Enter the total costs of fringe benefits, unless treated as part of an approved indirect cost rate. Provide a breakdown of amounts and percentages that comprise fringe benefit costs.

Line 6c:

Travel—Enter total cost of all travel by employees of the project. Do not enter costs for consultant's travel.

Justification—Include the name(s) of traveler(s), total number of trips, destinations, length of stay, mileage rate, transportation costs and subsistence allowances. Traveler must be a person listed under the personnel line or employee being paid under non-federal share. (**Note**: Local transportation and Consultant travel costs are entered on Line 6h.)

Line 6d:

Equipment—Enter the total costs of all equipment to be acquired by the project. Equipment means an article of non-expendable, tangible personal property having a useful life of more than one year and an acquisition cost which equals or exceeds the lesser of (a) the capitalization level established by the organization for financial statement purposes, or (b) $5,000. [Note: If an applicant's current rate agreement was based on another definition for equipment, such as ''tangible personal property $500 or more'', the applicant shall use the definition used by the cognizant agency in determining the rate(s). However, consistent with the applicant's equipment policy, lower limits may be set.]

Justification—Equipment to be purchased with Federal funds must be required to conduct the project, and the applicant organization or its subgrantees must not already have the equipment or a reasonable facsimile available to the project.

Line 6e:

Supplies—Enter the total costs of all tangible personal property other than that included on line 6d.

Justification—Provide a general description of what is being purchased such as type of supplies: Office, classroom, medical, etc. Include equipment costing less than $5,000 per item.

Line 6f:

Contractual—Enter the total costs of all contracts, including (1) procurement contracts (except those which belong on other lines such as equipment, supplies, etc.) and (2) contracts with secondary recipient organizations including delegate agencies and specific project(s) or businesses to be financed by the applicant.

Justification—Attach a list of contractors, indicating the names of the organizations, the purposes of the contracts, the estimated dollar amounts, and selection process of the awards as part of the budget justification. Also provide back-up documentation identifying the name of contractor, purpose of contract, and major cost elements.

Note 1: Whenever the applicant/grantee intends to delegate part of the program to another agency, the applicant/grantee must submit Sections A and B of this Form SF–424A, completed for each delegate agency by agency title, along with the required supporting information referenced in the applicable instructions.

The total costs of all such agencies will be part of the amount shown on Line 6f. Provide draft Request for Proposal in accordance with 45 CFR part 74, Appendix A. All procurement transactions shall be conducted in a manner to provide, to the maximum extent practical, open and free competition.

Note 2: Contractual cannot be a person—must be an organization, firm, etc. Enter Consultant cost on Line 6h.

Line 6g:

Construction—Not applicable.

Line 6h:

Other—Enter the total of all other costs. Such costs, where applicable, may include, but are not limited to, insurance, food, medical and dental costs (non-contractual), fees and travel paid directly to individual consultants, local transportation (all travel which does not require per diem is considered local travel), space and equipment rentals, printing and publication, computer use training costs including tuition and stipends, training service costs including wage payments to individuals and supportive service payments, and staff development costs.

Line 6i:

Total Direct Charges—Enter the total of 6a through 6h.

Line 6j:

Indirect Charges—Enter the total amount of indirect costs. This line should be used only when the applicant currently has an indirect cost rate approved by DHHS or other Federal agencies.

Line 6k:

Totals—Enter the total amount of Lines 6i and 6j.

Line 7:

Program Income—Enter the estimated amount of income, if any, expected to be generated from this project. Separately show expected program income generated from OCS support and income generated from other mobilized funds. Do not add or subtract this amount from the budget total. Show the nature and source of income in the program narrative statement.

Justification—Describe the nature, source and anticipated use of program income in the Program Narrative Statement.

Section C—Non-Federal Resources

This section is to record the amounts of *Non-Federal* resources that will be used to support the project. *Non-Federal* resources mean other than OCS funds for which the applicant has received a commitment. Provide a brief explanation, on a separate sheet, showing the type of contribution, broken out by Object Class Category, (See SF–424A, Section B.6) and whether it is cash or third party in-kind. The firm commitment of these required funds must be documented and submitted with the application in order to be given credit in the Criterion.

Except in unusual situations, this documentation must be in the form of letters of commitment or letters of intent from the organization(s)/individuals from which funds will be received.

Line 8:

Column (a)—Enter the project title.

Column (b)—Enter the amount of cash or donations to be made by the applicant.

Column (c)—Enter the State contribution.

Column (d)—Enter the amount of cash and third party in-kind contributions to be made from all other sources.

Column (e)—Enter the total of columns (b), (c), and (d).

Lines 9, 10 and 11:

Leave Blank

Line 12:

Carry the total of each column of Line 8, (b) through (e). The amount in Column (e) should be equal to the amount on Section A, Line 5, Column (f).

Justification—Describe third party in-kind contributions, if included.

Section F—Other Budget Information

Line 21:

Direct Charges—Include narrative justification required under Section B for each object class category for the total project period.

Line 22:

Indirect Charges—Enter the type of DHHS or other Federal agency approved indirect cost rate (provisional, predetermined, final or fixed) that will be in effect during the funding period, the estimated amount of the base to which the rate is applied and the total indirect expense. Also, enter the date the rate was approved, where applicable. Attach a copy of the approved rate agreement.

Line 23:

Provide any other explanations and continuation sheets required or deemed necessary to justify or explain the budget information.

3. Project Summary Description

Clearly mark this separate page with the applicant name as shown in item 5 of the SF 424, and the title of the project as shown in item 11 of the SF 424. The summary description should not exceed 300 words. These 300 words become part of the computer database on each project.

Care should be taken to produce a summary description which accurately and concisely reflects the application. It should describe the objectives of the project, the approaches to be used and the outcomes expected. The description should also include a list of major products that will result from the proposed project, such as software packages, materials, management procedures, data collection instruments, training packages, or videos (please note that audiovisuals should be closed captioned). The project summary description, together with the information on the SF 424, will constitute the project ''abstract.'' It is the major source of information about the proposed project and is usually the first part of the application that the reviewers read in evaluating the application.

4. Program Narrative Statement

The Program Narrative Statement is a very important part of an application. It should be clear, concise, and address the specific requirements mentioned under the priority area description in Part II. The narrative should also provide information concerning how the application meets the evaluation criteria using the following headings:

(a) Need for the Project;

(b) Goals and Objectives;

(c) Approach;

(d) Results and Benefits; and

(e) Level of Effort.

The specific information to be included under each of these headings is described in Part III, Evaluation Criteria.

The narrative should be typed double-spaced on a single-side of an 8½″ x 11″ plain white paper, with 1″ margins on all sides. All pages of the narrative (including charts, references/footnotes, tables, maps, exhibits, etc.) must be sequentially numbered, beginning with ''Objectives and Need for the Project'' as page number one. Applicants should not submit reproductions of larger size paper, reduced to meet the size requirement.

The length of the application, including the application forms and all attachments, should not exceed 60 pages. A page is a single side of an 8½″ x 11″ sheet of paper. Applicants are requested not to send pamphlets, maps, brochures or other printed material along with their application as these pose photocopy difficulties. These materials, if submitted, will not be included in the review process if they exceed the 60-page limit. Each page of the application will be counted to determine the total length.

5. Organizational Capability Statement

The Organizational Capability Statement should consist of a brief (two to three pages) background description of how the applicant organization (or the unit within the organization that will have responsibility for the project) is organized, the types and quantity of services it provides, and/or the research and management capabilities it possesses. This description should cover capabilities not included in the Program Narrative Statement. It may include descriptions of any current or previous relevant experience, or describe the competence of the project team and its demonstrated ability to produce a final product that is readily comprehensible and usable. An organization chart showing the relationship of the project to the current organization should be included.

6. Assurances/Certifications

Applicants are required to file an SF 424B, Assurances—Non-Construction Programs, and the Certification Regarding Lobbying. Both must be signed and returned with the application. In addition, applicants must certify their compliance with:

Drug-Free Workplace Requirements; and

Debarment and Other Responsibilities; and

Certification Regarding Environmental Tobacco Smoke.

These certifications are self-explanatory. Copies of these assurances/certifications are reprinted at the end of this Application Kit and should be reproduced as necessary. A duly authorized representative of the applicant organization must certify that the applicant is in compliance with these assurances/certifications. A signature on the SF 424 indicates compliance with the Drug Free Workplace Requirements, and Debarment and Other Responsibilities, and Environmental Tobacco Smoke certifications.

E. The Application Package

Each application package must include an original and four copies of the complete application. Each copy should be stapled securely (front and back if necessary) in the upper left-hand corner. All pages of the narrative (including charts, tables, maps, exhibits, etc.) must be sequentially numbered, beginning with page one. In order to facilitate handling, please do not use covers, binders or tabs. Do not include extraneous materials as attachments, such as agency promotion brochures, slides, tapes, film clips, minutes of meetings, survey instruments or articles of incorporation.

Applicants should include a self-addressed stamped acknowledgement card. All applicants will be notified automatically about the receipt of their application. If acknowledgement of receipt of your application is not received within three weeks after the deadline date, please notify to Family Violence Operations Center by telephone at (703) 351–7676.

F. Post-Award Information and Reporting Requirements

Following approval of the applications selected for funding, notice of project approval and authority to draw down project funds will be made in writing. The official award document is the Financial Assistance Award

which provides the amount of Federal funds approved for use in the project, the project and budget periods for which support is provided, the terms and conditions of the award, the total project period for which support is contemplated, and the total required financial grantee participation.

General Conditions and Special Conditions (where the latter are warranted) which will be applicable to grants, grantees will be subject to the provisions of 45 CFR part 74 or 92.

Grantees will be required to submit semi-annual financial reports (SF 269) throughout the project period, as well as a final progress and financial report within 90 days of the termination of the project.

Grantees are subject to the audit requirements in 45 CFR parts 74 (non-governmental), 92 (governmental), and OMB Circular A–133. If an applicant does not request indirect costs, it should anticipate in its budget request the cost of having an audit performed at the end of the grant period.

Section 319 of Public Law 101–121, signed into law on October 23, 1989, imposes prohibitions and requirements for disclosure and certification related to lobbying on recipients of Federal contracts, grants, cooperative agreements, and loans. It provides exemptions or Indian Tribes and Tribal organizations. Current and prospective recipients (and their subtier contractors and/or grantees) are prohibited from using Federal funds, other than profits from a Federal contract, for lobbying Congress or any Federal agency in connection with the award of a contract, grant, cooperative agreement or loan. In addition, for each award action in excess of $100,000 (or $150,000 for loans) the law requires recipients and their subtier contractors and/or subgrantees (1) To certify that they have neither used nor will use any appropriated funds for payment to lobbyists; (2) to disclose the name, address, payment details, and the purpose of any agreements with lobbyists whom recipients or their subtier contractors or subgrantees will pay with profits or non-appropriated funds on or after December 22, 1989 and (3) to file quarterly up-dates about the use of lobbyists if material changes occur in their use. The law establishes civil penalties for noncompliance.

(Catalog of Federal Domestic Assistance number 93.592, Family Violence Prevention and Services)

Dated: December 7, 2001.

Clarence H. Carter,

Director, Office of Community Services.

List of Attachments

Attachment A—Certification Regarding Lobbying
Attachment B—Certification Regarding Debarment
Attachment C—Certification Regarding Environmental Tobacco Smoke
Attachment D—Certification Regarding Drug-Free Workplace
Attachment E—State Single Point of Contact

Attachment A

Certification Regarding Lobbying

Certification for Contracts, Grants, Loans, and Cooperative Agreements

The undersigned certifies, to the best of his or her knowledge and belief, that:

(1) No Federal appropriated funds have been paid or will be paid, by or on behalf of the undersigned, to any person for influencing or attempting to influence an officer or employee of an agency, a Member of Congress, an officer or employee of Congress, or an employee of a Member of Congress in connection with the awarding of any Federal contract, the making of any Federal grant, the making of any Federal loan, the entering into of any cooperative agreement, and the extension, continuation, renewal, amendment, or modification of any Federal contract, grant, loan, or cooperative agreement.

(2) If any funds other than Federal appropriated funds have been paid or will be paid to any person for influencing or attempting to influence an officer or employee of any agency, a Member of Congress, an officer or employee of Congress, or an employee of a Member of Congress in connection with this Federal contract, grant, loan, or cooperative agreement, the undersigned shall complete and submit Standard Form-LLL, ''Disclosure Form to Report Lobbying,'' in accordance with its instructions.

(3) The undersigned shall require that the language of this certification be included in the award documents for all subawards at all tiers (including subcontracts, subgrants, and contracts under grants, loans, and cooperative agreements) and that all subrecipients shall certify and disclose accordingly. This certification is a material representation of fact upon which reliance was placed when this transaction was made or entered into. Submission of this certification is a prerequisite for making or entering into this transaction imposed by section 1352, title 31, U.S. Code. Any person who fails to file the required certification shall be subject to a civil penalty of not less than $10,000 and not more than $100,000 for each such failure.

Statement for Loan Guarantees and Loan Insurance

The undersigned states, to the best of his or her knowledge and belief, that:

If any funds have been paid or will be paid to any person for influencing or attempting to influence an officer or employee of any agency, a Member of Congress, an officer or employee of Congress, or an employee of a Member of Congress in connection with this commitment providing for the United States to insure or guarantee a loan, the undersigned shall complete and submit Standard Form-LLL, ''Disclosure Form to Report Lobbying,'' in accordance with its instructions. Submission of this statement is a prerequisite for making or entering into this transaction imposed by section 1352, title 31, U.S. Code. Any person who fails to file the required statement shall be subject to a civil penalty of not less than $10,000 and not more than $100,000 for each such failure.

_____
Signature

_____
Title

_____
Organization

Attachment A Page 2

Approved by OMB 0348-0046

DISCLOSURE OF LOBBYING ACTIVITIES

Complete this form to disclose lobbying activities pursuant to 31 U.S.C. 1352
(See reverse for public burden disclosure.)

1. Type of Federal Action:	2. Status of Federal Action:	3. Report Type:
☐ a. contract b. grant c. cooperative agreement d. loan e. loan guarantee f. loan insurance	☐ a. bid/offer/application b. initial award c. post-award	☐ a. initial filing b. material change **For Material Change Only:** year _____ quarter _____ date of last report _____

4. Name and Address of Reporting Entity:	5. If Reporting Entity in No. 4 is a Subawardee, Enter Name and Address of Prime:
☐ Prime ☐ Subawardee Tier _____, *if known*: **Congressional District**, *if known*:	 **Congressional District**, *if known*:
6. Federal Department/Agency:	**7. Federal Program Name/Description:** CFDA Number, *if applicable*: _____
8. Federal Action Number, *if known*:	**9. Award Amount**, *if known*: $
10. a. Name and Address of Lobbying Registrant (*if individual, last name, first name, MI*):	**b. Individuals Performing Services** (*including address if different from No. 10a*) (*last name, first name, MI*):
11. Information requested through this form is authorized by title 31 U.S.C. section 1352. This disclosure of lobbying activities is a material representation of fact upon which reliance was placed by the tier above when this transaction was made or entered into. This disclosure is required pursuant to 31 U.S.C. 1352. This information will be reported to the Congress semi-annually and will be available for public inspection. Any person who fails to file the required disclosure shall be subject to a civil penalty of not less that $10,000 and not more than $100,000 for each such failure.	Signature: _____ Print Name: _____ Title: _____ Telephone No.: _____ Date: _____
Federal Use Only:	Authorized for Local Reproduction Standard Form LLL (Rev. 7-97)

BILLING CODE 4184–01–C

Instructions for Completion of SF–LLL, Disclosure of Lobbying Activities

This disclosure form shall be completed by the reporting entity, whether subawardee or prime Federal recipient, at the initiation or receipt of a covered Federal action, or a material change to a previous filing, pursuant to title 31 U.S.C. section 1352. The filing of a form is required for each payment or agreement to make payment to any lobbying entity for influencing or attempting to influence an officer or employee of any agency, a Member of Congress, an officer or employee of Congress, or an employee of a Member of Congress in connection with a covered Federal action. Complete all items that apply for both the initial filing and material change report. Refer to the implementing guidance published by the Office of Management and Budget for additional information.

1. Identify the type of covered Federal action for which lobbying activity is and/or has been secured to influence the outcome of a covered Federal action.

2. Identify the status of the covered Federal action.

3. Identify the appropriate classification of this report. If this is a followup report caused by a material change to the information previously reported, enter the year and quarter in which the change occurred. Enter the date of the last previously submitted report by this reporting entity for this covered Federal action.

4. Enter the full name, address, city, State and zip code of the reporting entity. Include Congressional District, if known. Check the appropriate classification of the reporting entity that designated if it is, or expects to be, a prime or subaward recipient. Identify the tier of the subawardee, e.g., the first subawardee of the prime is the 1st tier. Subawards include but are not limited to subcontracts, subgrants and contract awards under grants.

5. If the organization filing the report in item 4 checks ''Subawardee,'' then enter the full name, address, city, State and zip code of the prime Federal recipient. Include Congressional District, if known.

6. Enter the name of the Federal agency making the award or loan commitment, include at least one organization level below agency name, if known. For example, Department of Transportation, United States Coast Guard.

7. Enter the Federal program name or description for the covered Federal action (item 1). If known, enter the full Catalog of federal Domestic Assistance (CFDA) number for grants, cooperative agreements, loans, and loan commitments.

8. Enter the most appropriate Federal identifying number available for the Federal action identified in item 1 (e.g., Request for Proposal (RFP) number; Invitation for Bid (IFB) number; grant announcement number; the contract, grant, or loan award number; the application/proposal control number assigned by the Federal agency). Include prefixes, e.g., ''RFP–DE–90–001.''

9. For a covered Federal action when there has been an award or loan commitment by the Federal agency, enter the Federal amount of the award/loan commitment for the prime entity identified in item 4 or 5.

10. (a) Enter the full name, address, city, State and zip code of the lobbying registrant under the Lobbying Disclosure Act of 1995 engaged by the reporting entity identified in item 4 to influence the covered Federal action.

(b) Enter the full names of the individual(s) performing services, and include full address if different from 10(a). Enter Last Name, First Name, and Middle Initial (MI).

11. The certifying official shall sign and date the form, print his/her name, title, and telephone number.

According to the Paperwork Reduction Act, as amended, no persons are required to respond to a collection of information unless it displays a valid OMB Control Number. The valid OMB control number for this information collection is OMB No. 0348–0046. Public reporting burden for this collection of information is estimated to average 10 minutes per response, including time for reviewing instructions, searching existing data sources, gathering and maintaining the data needed, and completing and reviewing the collection of information. Send comments regarding the burden estimate or any other aspect of this collection of information, including suggestions for reducing this burden, to the Office of Management and Budget, Paperwork Reduction Project (0348–0046), Washington, DC 20503.

Attachment B

Certification Regarding Debarment, Suspension and Other Responsibility Matters

Certification Regarding Debarment, Suspension, and Other Responsibility Matters—Primary Covered Transactions

Instructions for Certification

1. By signing and submitting this proposal, the prospective primary participant is providing the certification set out below.

2. The inability of a person to provide the certification required below will not necessarily result in denial of participation in this covered transaction. The prospective participant shall submit an explanation of why it cannot provide the certification set out below. The certification or explanation will be considered in connection with the department or agency's determination whether to enter into this transaction. However, failure of the prospective primary participant to furnish a certification or an explanation shall disqualify such person from participation in this transaction.

3. The certification in this clause is a material representation of fact upon which reliance was placed when the department or agency determined to enter into this transaction. If it is later determined that the prospective primary participant knowingly rendered an erroneous certification, in addition to other remedies available to the Federal Government, the department or agency may terminate this transaction for cause or default.

4. The prospective primary participant shall provide immediate written notice to the department or agency to which this proposal is submitted if at any time the prospective primary participant learns that its certification was erroneous when submitted or has become erroneous by reason of changed circumstances.

5. The terms covered transaction, debarred, suspended, ineligible, lower tier covered transaction, participant, person, primary covered transaction, principal, proposal, and voluntarily excluded, as used in this clause, have the meanings set out in the Definitions and Coverage sections of the rules implementing Executive Order 12549. You may contact the department or agency to which this proposal is being submitted for assistance in obtaining a copy of those regulations.

6. The prospective primary participant agrees by submitting this proposal that, should the proposed covered transaction be entered into, it shall not knowingly enter into any lower tier covered transaction with a person who is proposed for debarment under 48 CFR part 9, subpart 9.4, debarred, suspended, declared ineligible, or voluntarily excluded from participation in this covered transaction, unless authorized by the department or agency entering into this transaction.

7. The prospective primary participant further agrees by submitting this proposal that it will include the clause titled ''Certification Regarding Debarment, Suspension, Ineligibility and Voluntary Exclusion-Lower Tier Covered Transaction,'' provided by the department or agency entering into this covered transaction, without modification, in all lower tier covered transactions and in all solicitations for lower tier covered transactions.

8. A participant in a covered transaction may rely upon a certification of a prospective participant in a lower tier covered transaction that it is not proposed for debarment under 48 CFR part 9, subpart 9.4, debarred, suspended, ineligible, or voluntarily excluded from the covered transaction, unless it knows that the certification is erroneous. A participant may decide the method and frequency by which it determines the eligibility of its principals. Each participant may, but is not required to, check the List of Parties Excluded from Federal Procurement and Nonprocurement Programs.

9. Nothing contained in the foregoing shall be construed to require establishment of a system of records in order to render in good faith the certification required by this clause. The knowledge and information of a participant is not required to exceed that which is normally possessed by a prudent person in the ordinary course of business dealings.

10. Except for transactions authorized under paragraph 6 of these instructions, if a participant in a covered transaction knowingly enters into a lower tier covered transaction with a person who is proposed for debarment under 48 CFR part 9, subpart 9.4, suspended, debarred, ineligible, or voluntarily excluded from participation in this transaction, in addition to other remedies available to the Federal Government, the department or agency may terminate this transaction for cause or default.

* * * * *

Certification Regarding Debarment, Suspension, and Other Responsibility Matters—Primary Covered Transactions

(1) The prospective primary participant certifies to the best of its knowledge and belief, that it and its principals:

(a) Are not presently debarred, suspended, proposed for debarment, declared ineligible, or voluntarily excluded by any Federal department or agency;

(b) Have not within a three-year period preceding this proposal been convicted of or had a civil judgment rendered against them for commission of fraud or a criminal offense in connection with obtaining, attempting to obtain, or performing a public (Federal, State or local) transaction or contract under a public transaction; violation of Federal or State antitrust statutes or commission of embezzlement, theft, forgery, bribery, falsification or destruction of records, making false statements, or receiving stolen property;

(c) Are not presently indicted for or otherwise criminally or civilly charged by a governmental entity (Federal, State or local) with commission of any of the offenses enumerated in paragraph (1)(b) of this certification; and

(d) Have not within a three-year period preceding this application/proposal had one or more public transactions (Federal, State or local) terminated for cause or default.

(2) Where the prospective primary participant is unable to certify to any of the statements in this certification, such prospective participant shall attach an explanation to this proposal.

Certification Regarding Debarment, Suspension, Ineligibility and Voluntary Exclusion—Lower Tier Covered Transactions

Instructions for Certification

1. By signing and submitting this proposal, the prospective lower tier participant is providing the certification set out below.

2. The certification in this clause is a material representation of fact upon which reliance was placed when this transaction was entered into. If it is later determined that the prospective lower tier participant knowingly rendered an erroneous certification, in addition to other remedies available to the Federal Government the department or agency with which this transaction originated may pursue available remedies, including suspension and/or debarment.

3. The prospective lower tier participant shall provide immediate written notice to the person to which this proposal is submitted if at any time the prospective lower tier participant learns that its certification was erroneous when submitted or had become erroneous by reason of changed circumstances.

4. The terms covered transaction, debarred, suspended, ineligible, lower tier covered transaction, participant, person, primary covered transaction, principal, proposal, and voluntarily excluded, as used in this clause, have the meaning set out in the Definitions and Coverage sections of rules implementing Executive Order 12549. You may contact the person to which this proposal is submitted for assistance in obtaining a copy of those regulations.

5. The prospective lower tier participant agrees by submitting this proposal that, [[Page 33043]] should the proposed covered transaction be entered into, it shall not knowingly enter into any lower tier covered transaction with a person who is proposed for debarment under 48 CFR part 9, subpart 9.4, debarred, suspended, declared ineligible, or voluntarily excluded from participation in this covered transaction, unless authorized by the department or agency with which this transaction originated.

6. The prospective lower tier participant further agrees by submitting this proposal that it will include this clause titled ''Certification Regarding Debarment, Suspension, Ineligibility and Voluntary Exclusion-Lower Tier Covered Transaction,'' without modification, in all lower tier covered transactions and in all solicitations for lower tier covered transactions.

7. A participant in a covered transaction may rely upon a certification of a prospective participant in a lower tier covered transaction that it is not proposed for debarment under 48 CFR part 9, subpart 9.4, debarred, suspended, ineligible, or voluntarily excluded from covered transactions, unless it knows that the certification is erroneous. A participant may decide the method and frequency by which it determines the eligibility of its principals. Each participant may, but is not required to, check the List of Parties Excluded from Federal Procurement and Nonprocurement Programs.

8. Nothing contained in the foregoing shall be construed to require establishment of a system of records in order to render in good faith the certification required by this clause. The knowledge and information of a participant is not required to exceed that which is normally possessed by a prudent person in the ordinary course of business dealings.

9. Except for transactions authorized under paragraph 5 of these instructions, if a participant in a covered transaction knowingly enters into a lower tier covered transaction with a person who is proposed for debarment under 48 CFR part 9, subpart 9.4, suspended, debarred, ineligible, or voluntarily excluded from participation in this transaction, in addition to other remedies available to the Federal Government, the department or agency with which this transaction originated may pursue available remedies, including suspension and/or debarment.

* * * * *

Certification Regarding Debarment, Suspension, Ineligibility an Voluntary Exclusion—Lower Tier Covered Transactions

(1) The prospective lower tier participant certifies, by submission of this proposal, that neither it nor its principals is presently debarred, suspended, proposed for debarment, declared ineligible, or voluntarily excluded from participation in this transaction by any Federal department or agency.

(2) Where the prospective lower tier participant is unable to certify to any of the statements in this certification, such prospective participant shall attach an explanation to this proposal.

Attachment C

Certification Regarding Environmental Tobacco Smoke

Public Law 103–227, Part C Environmental Tobacco Smoke, also known as the Pro Children Act of 1994 (Act), requires that smoking not be permitted in any portion of any indoor routinely owned or leased or contracted for by an entity and used routinely or regularly for provision of health, day care, education, or library services to children under the age of 18, if the services are funded by Federal programs either directly or through State or local governments, by Federal grant, contract, loan, or loan guarantee. The law does not apply to children's services provided in private residences, facilities funded solely by Medicare or Medicaid funds, and portions of facilities used for inpatient drug or alcohol treatment. Failure to comply with the provisions of the law may result in the imposition of a civil monetary penalty of up to $1000 per day and/or the imposition of an administrative compliance order on the responsible entity. By signing and submitting this application the applicant/grantee certifies that it will comply with the requirements of the Act.

The applicant/grantee further agrees that it will require the language of this certification be included in any subawards which contain provisions for the children's services and that all subgrantees shall certify accordingly.

Attachment D

Certification Regarding Drug-Free Workplace Requirements

This certification is required by the regulations implementing the Drug-Free Workplace Act of 1988: 45 CFR part 76, subpart, F. Sections 76.630(c) and (d)(2) and 76.645(a)(1) and (b) provide that a Federal agency may designate a central receipt point for STATE-WIDE AND STATE AGENCY-WIDE certifications, and for notification of criminal drug convictions. For the Department of Health and Human Services, the central point is: Division of Grants Management and Oversight, Office of Management and Acquisition, Department of Health and Human Services, Room 517–D, 200 Independence Avenue, SW Washington, DC 20201.

Certification Regarding Drug-Free Workplace Requirements (Instructions for Certification)

1. By signing and/or submitting this application or grant agreement, the grantee is providing the certification set out below.

2. The certification set out below is a material representation of fact upon which reliance is placed when the agency awards the grant. If it is later determined that the grantee knowingly rendered a false certification, or otherwise violates the requirements of the Drug-Free Workplace Act, the agency, in addition to any other remedies available to the Federal Government, may take action authorized under the Drug-Free Workplace Act.

3. For grantees other than individuals, Alternate I applies.

4. For grantees who are individuals, Alternate II applies.

5. Workplaces under grants, for grantees other than individuals, need not be identified on the certification. If known, they may be identified in the grant application. If the grantee does not identify the workplaces at the time of application, or upon award, if there is no application, the grantee must keep the identity of the workplace(s) on file in its office and make the information available for Federal inspection. Failure to identify all known workplaces constitutes a violation of the grantee's drug-free workplace requirements.

6. Workplace identifications must include the actual address of buildings (or parts of buildings) or other sites where work under the grant takes place. Categorical descriptions may be used (e.g., all vehicles of a mass transit authority or State highway department while in operation, State employees in each local unemployment office, performers in concert halls or radio studios).

7. If the workplace identified to the agency changes during the performance of the grant, the grantee shall inform the agency of the change(s), if it previously identified the workplaces in question (see paragraph five).

8. Definitions of terms in the Nonprocurement Suspension and Debarment common rule and Drug-Free Workplace common rule apply to this certification. Grantees' attention is called, in particular, to the following definitions from these rules:

Controlled substance means a controlled substance in Schedules I through V of the Controlled Substances Act (21 U.S.C. 812) and as further defined by regulation (21 CFR 1308.11 through 1308.15);

Conviction means a finding of guilt (including a plea of nolo contendere) or imposition of sentence, or both, by any judicial body charged with the responsibility to determine violations of the Federal or State criminal drug statutes;

Criminal drug statute means a Federal or non-Federal criminal statute involving the manufacture, distribution, dispensing, use, or possession of any controlled substance;

Employee means the employee of a grantee directly engaged in the performance of work under a grant, including: (i) All direct charge employees; (ii) All indirect charge employees unless their impact or involvement is insignificant to the performance of the grant; and, (iii) Temporary personnel and consultants who are directly engaged in the performance of work under the grant and who are on the grantee's payroll. This definition does not include workers not on the payroll of the grantee (e.g., volunteers, even if used to meet a matching requirement; consultants or independent contractors not on the grantee's payroll; or employees of subrecipients or subcontractors in covered workplaces).

Certification Regarding Drug-Free Workplace Requirements

Alternate I. (Grantees Other Than Individuals)

The grantee certifies that it will or will continue to provide a drug-free workplace by:

(a) Publishing a statement notifying employees that the unlawful manufacture, distribution, dispensing, possession, or use of a controlled substance is prohibited in the grantee's workplace and specifying the actions that will be taken against employees for violation of such prohibition;

(b) Establishing an ongoing drug-free awareness program to inform employees about—

(1) The dangers of drug abuse in the workplace;

(2) The grantee's policy of maintaining a drug-free workplace;

(3) Any available drug counseling, rehabilitation, and employee assistance programs; and

(4) The penalties that may be imposed upon employees for drug abuse violations occurring in the workplace;

(c) Making it a requirement that each employee to be engaged in the performance of the grant be given a copy of the statement required by paragraph (a);

(d) Notifying the employee in the statement required by paragraph (a) that, as a condition of employment under the grant, the employee will—

(1) Abide by the terms of the statement; and

(2) Notify the employer in writing of his or her conviction for a violation of a criminal drug statute occurring in the workplace no later than five calendar days after such conviction;

(e) Notifying the agency in writing, within ten calendar days after receiving notice under paragraph (d)(2) from an employee or otherwise receiving actual notice of such conviction. Employers of convicted employees must provide notice, including position title, to every grant officer or other designee on whose grant activity the convicted employee was working, unless the Federal agency has designated a central point for the receipt of such notices. Notice shall include the identification number(s) of each affected grant;

(f) Taking one of the following actions, within 30 calendar days of receiving notice under paragraph (d)(2), with respect to any employee who is so convicted—

(1) Taking appropriate personnel action against such an employee, up to and including termination, consistent with the requirements of the Rehabilitation Act of 1973, as amended; or

(2) Requiring such employee to participate satisfactorily in a drug abuse assistance or rehabilitation program approved for such purposes by a Federal, State, or local health, law enforcement, or other appropriate agency;

(g) Making a good faith effort to continue to maintain a drug-free workplace through implementation of paragraphs (a), (b), (c), (d), (e) and (f).

(B) The grantee may insert in the space provided below the site(s) for the performance of work done in connection with the specific grant:

Place of Performance (Street address, city, county, state, zip code)

Check if there are workplaces on file that are not identified here.

Alternate II. (Grantees Who Are Individuals)

(a) The grantee certifies that, as a condition of the grant, he or she will not engage in the unlawful manufacture, distribution, dispensing, possession, or use of a controlled substance in conducting any activity with the grant;

(b) If convicted of a criminal drug offense resulting from a violation occurring during the conduct of any grant activity, he or she will report the conviction, in writing, within 10 calendar days of the conviction, to every grant officer or other designee, unless the Federal agency designates a central point for the receipt of such notices. When notice is made to such a central point, it shall include the identification number(s) of each affected grant.

Attachment E

State Single Point of Contact Listing Maintained by OMB

In accordance with Executive Order 12372, ''Intergovernmental Review of Federal Programs,'' Section 4, ''the Office of Management and Budget (OMB) shall maintain a list of official State entities designated by the States to review and coordinate proposed Federal financial assistance and direct Federal development.'' This attached listing is the OFFICIAL OMB LISTING. OMB's point of contact for the SPOC list is Fredrick J. Charney (202) 395–3993 or *grants@omb.eop.gov*. This listing is also published in the Catalogue of Federal Domestic Assistance biannually

October 5, 1999

*OMB State Single Point of Contact Listing**

Arizona

Joni Saad, Arizona State Clearinghouse, 3800 N. Central Avenue, Fourteenth Floor, Phoenix, Arizona 85012, Telephone: (602) 280–1315, Fax: (602) 280–8144.

Arkansas

Mr. Tracy L. Copeland, Manager, State Clearinghouse, Office of Intergovernmental Services, Department of Finance and Administration, 515 W. 7th St., Room 412, Little Rock, Arkansas 72203, Telephone: (501) 682–1074, Fax: (501) 682–5206.

California

Grants Coordination, State Clearinghouse, Office of Planning & Research, 1400 Tenth Street, Room 121, Sacramento, California 95814, Telephone: (916) 445–0613, Fax: (916) 323–3018.

Delaware

Francine Booth, State Single Point of Contact, Executive Department, Office of the Budget, 540 S. Dupont Highway, Suite 5, Dover, Delaware 19901, Telephone: (302) 739–3326, Fax: (302) 739–5661.

District of Columbia

Charles Nichols, State Single Point of Contact, Office of Grants Mgmt. & Dev., 717 14th Street, NW. Suite 1200, Washington, DC 20005, Telephone: (202) 727–1700 (direct), (202) 727–6537 (secretary), Fax: (202) 727–1617.

Florida

Florida State Clearinghouse, Department of Community Affairs, 2555 Shumard Oak Blvd., Tallahassee, Florida 32399–2100, Telephone: (850) 922–5438, Fax: (850)

414–0479, Contact: Cherie Trainor, (850) 414–5495.

Georgia

Deborah Stephens, Coordinator, Georgia State Clearinghouse, 270 Washington Street, SW.—8th Floor, Atlanta, Georgia 30334, Telephone: (404) 656–3855, Fax: (404) 656–7901.

Illinois

Virginia Bova, State Single Point of Contact, Illinois Department of Commerce and Community Affairs, James R. Thompson Center, 100 West Randolph, Suite 3–400, Chicago, Illinois 60601, Telephone: (312) 814–6028, Fax: (312) 814–1800.

Indiana

Renee Miller, State Budget Agency, 212 State House, Indianapolis, Indiana 46204–2796, Telephone: (317) 232–2971 (directline), Fax: (317) 233–3323.

Iowa

Steven R. McCann, Division for Community Assistance, Iowa Department of Economic Development, 200 East Grand Avenue, Des Moines, Iowa 50309, Telephone: (515) 242–4719, Fax: (515) 242–4809.

Kentucky

Kevin J. Goldsmith, Director, Sandra Brewer, Executive Secretary, Intergovernmental Affairs, Office of the Governor, 700 Capitol Avenue, Frankfort, Kentucky 40601, Telephone: (502) 564–2611, Fax: (502) 564–0437.

Maine

Joyce Benson, State Planning Office, 184 State Street, 38 State House Station, Augusta, Maine 04333, Telephone: (207) 287–3261, Fax: (207) 287–6489.

Maryland

Linda Janey, Manager, Plan & Project Review, Maryland Office of Planning, 301 W. Preston Street—Room 1104, Baltimore, Maryland 21201–2365, Staff Contact: Linda Janey, Telephone: (410) 767–4490, Fax: (410) 767–4480.

Michigan

Richard Pfaff, Southeast Michigan Council of Governments, 660 Plaza Drive—Suite 1900, Detroit, Michigan 48226, Telephone: (313) 961–4266, Fax: (313) 961–4869.

Mississippi

Cathy Mallette Clearinghouse Officer, Department of Finance and Administration, 550 High Street, 303 Walters Sillers Building, Jackson, Mississippi 39201–3087, Telephone: (601) 359–6762, Fax: (601) 359–6758.

Missouri

Lois Pohl, Federal Assistance Clearinghouse, Office of Administration, P.O. Box 809, Jefferson Building, 9th Floor, Jefferson City, Missouri 65102, Telephone: (314) 751–4834, Fax: (314) 751–7819.

Nevada

Department of Administration, State Clearinghouse, 209 E. Musser Street, Room 220, Carson City, Nevada 89710, Telephone: (702) 687–4065, Fax: (702) 687–3983, Contact: Heather Elliot, (702) 687–6367.

New Hampshire

Jeffrey H. Taylor, Director, New Hampshire Office of State Planning, Attn: Intergovernmental Review Process, Mike Blake, 2 1/2 Beacon Street, Concord, New Hampshire 03301, Telephone: (603) 271–2155, Fax: (603) 271–1728.

New Mexico

Nick Mandell, Local Government Division, Room 201 Bataan Memorial Building, Santa Fe, New Mexico 87503, Telephone: (505) 827–3640, Fax: (505) 827–4984.

North Carolina

Jeanette Furney, North Carolina Department of Administration, 116 West Jones Street—Suite 5106, Raleigh, North Carolina 27603–8003, Telephone: (919) 733–7232, FAX: (919) 733–9571.

North Dakota

North Dakota Single Point of Contact, Office of Intergovernmental Assistance, 600 East Boulevard Avenue, Bismarck, North Dakota 58505–0170, Telephone: (701) 224–2094, FAX: (701) 224–2308.

Rhode Island

Kevin Nelson, Review Coordinator, Department of Administration, Division of Planning, One Capitol Hill, 4th Floor, Providence, Rhode Island 02908–5870, Telephone: (401) 277–2656, FAX: (401) 277–2083.

South Carolina

Omeagia Burgess, State Single Point of Contact, Budget and Control Board, Office of State Budget, 1122 Ladies Street—12th Floor, Columbia, South Carolina 29201, Telephone: (803) 734–0494, FAX: (803) 734–0645.

Texas

Tom Adams, Governors Office, Director, Intergovernmental Coordination, P.O. Box 12428, Austin, Texas 78711, Telephone: (512) 463–1771, FAX: (512) 936–2681.

Utah

Carolyn Wright, Utah State Clearinghouse, Office of Planning and Budget, Room 116 State Capitol, Salt Lake City, Utah 84114, Telephone: (801) 538–1027, FAX: (801) 538–1547.

West Virginia

Fred Cutlip, Director, Community Development Division, W. Virginia Development Office, Building #6, Room 553, Charleston, West Virginia 25305, Telephone: (304) 558–4010, FAX: (304) 558–3248.

Wisconsin

Jeff Smith, Section Chief, Federal/State Relations, Wisconsin Department of Administration, 101 East Wilson Street—6th Floor, P.O. Box 7868, Madison, Wisconsin 53707, Telephone: (608) 266–0267, FAX: (608) 267–6931.

Wyoming

Sandy Ross, State Single Point of Contact, Department of Administration and Information, 2001 Capitol Avenue, Room 214, Cheyenne, WY 82002, Telephone: (307) 777–5492, FAX: (307) 777–3696.

Territories

Guam

Joseph Rivera, Acting Director, Bureau of Budget and Management Research, Office of the Governor, P.O. Box 2950, Agana, Guam 96932, Telephone: (671)475–9411 or 9412, FAX: (671)472–2825.

Puerto Rico

Jose Caballero-Mercado, Chairman, Puerto Rico Planning Board, Federal Proposals Review Office, Minillas Government Center, P.O. Box 41119, San Juan, Puerto Rico 00940–1119, Telephone: (787) 727–4444, (787) 723–6190, FAX: (787) 724–3270.

North Mariana Islands

Mr. Alvaro A. Santos, Executive Officer, Office of Management and Budget, Office of the Governor, Saipan, MP 96950, Telephone: (670) 664–2256, FAX: (670) 664–2272, Contact person: Ms. Jacoba T. Seman, Federal Programs Coordinator, Telephone: (670) 664–2289, FAX: (670) 664–2272.

Virgin Islands

Nellon Bowry, Director, Office of Management and Budget, #41 Norregade Emancipation Garden, Station, Second Floor, Saint Thomas, Virgin Islands 00802.

Please direct all questions and correspondence about intergovernmental review to: Linda Clarke, Telephone: (809) 774–0750, FAX: (809) 776–0069.

If you would like a copy of this list faxed to your office, please call our publications office at: (202) 395–9068.

*In accordance with Executive Order #12372, ''Intergovernmental Review of Federal Programs,'' this listing represents the designated State Single Points of Contact. The jurisdictions not listed no longer participate in the process but grant applicants are still eligible to apply for the grant even if your state, territory, commonwealth, etc does not have a ''state single point of contact.'' states without ''state single points of contact'' include: Alabama, Alaska; American Samoa; Colorado; Connecticut; Hawaii; Idaho; Kansas; Louisiana; Massachusetts, Minnesota; Montana; Nebraska; New Jersey; New York; Ohio; Oklahoma; Oregon; Palau; Pennsylvania; South Dakota; Tennessee; Vermont, Virginia; and Washington. This list is based on the most current information provided by the States. Information on any changes or apparent errors should be provided to the Office of Management and Budget and the State in question. Changes to the list will only be made upon formal notification by the State. Also, this listing is published biannually in the Catalogue of Federal Domestic Assistance.

[FR Doc. 01–30825 Filed 12–12–01; 8:45 am]

BILLING CODE 4184–01–P

DEPARTMENT OF HEALTH AND HUMAN SERVICES

Food and Drug Administration

[Docket No. 99F–2535]

Ciba Specialty Chemicals Corp; Withdrawal of Food Additive Petition

AGENCY: Food and Drug Administration, HHS.

ACTION: Notice.

SUMMARY: The Food and Drug Administration (FDA) is announcing the withdrawal, without prejudice to a future filing, of a food additive petition (FAP 9B4680) proposing that the food additive regulations be amended to provide for the expanded safe use of 5,7-bis(1,1-dimethylethyl)-3-hydroxy-2(3H)-benzofuranone, reaction products with o-xylene as an antioxidant and/or stabilizer in olefin polymers, adhesives, pressure-sensitive adhesives, and ethylene-vinyl acetate copolymers intended for use in contact with food.

FOR FURTHER INFORMATION CONTACT: Anna P. Shanklin, Center for Food Safety and Applied Nutrition (HFS–215), Food and Drug Administration, 200 C St. SW., Washington, DC 20204, 202–418–3093.

(After December 14, 2001, the Center for Food Safety and Applied Nutrition's address will be: 5100 Paint Branch Pkwy., College Park, MD 20740.)

SUPPLEMENTARY INFORMATION: In a notice published in the **Federal Register** of August 6, 1999 (64 FR 42950), FDA announced that a food additive petition (FAP 9B4680) had been filed by Ciba Specialty Chemicals Corp., 540 White Plains Rd., Tarrytown, NY 10591–9005. The petition proposed to amend the food additive regulations in § 178.2010 *Antioxidants and/or stabilizers for polymers* (21 CFR 178.2010) to provide for the expanded safe use of 5,7-bis(1,1-dimethylethyl)-3-hydroxy-2(3H)-benzofuranone, reaction products with o-xylene as an antioxidant and/or stabilizer for olefin polymers complying with 21 CFR 177.1520, adhesives complying with 21 CFR 175.105, pressure-sensitive adhesives complying with 21 CFR 175.125, and ethylene-vinyl acetate copolymers complying with 21 CFR 177.1350 intended for use in contact with food. Ciba Specialty Chemicals Corp. has now withdrawn the petition without prejudice to a future filing (21 CFR 171.7).

Dated: November 16, 2001.

L. Robert Lake,

Director of Regulations and Policy, Center for Food Safety and Applied Nutrition.

[FR Doc. 01–30765 Filed 12–12–01; 8:45 am]

BILLING CODE 4160–01–S

DEPARTMENT OF HEALTH AND HUMAN SERVICES

Food and Drug Administration

[Docket No. 01D–0501]

International Cooperation on Harmonisation of Technical Requirements for Approval of Veterinary Medicinal Products (VICH); Draft Guidance for Industry on ''Pharmacovigilance of Veterinary Medicinal Products: Management of Periodic Summary Update Reports (PSUs)'' (VICH GL29); Request for Comments; Availability

AGENCY: Food and Drug Administration, HHS.

ACTION: Notice.

SUMMARY: The Food and Drug Administration (FDA) is announcing the availability of a draft guidance for industry (#142) entitled ''Pharmacovigilance of Veterinary Medicinal Products: Management of Periodic Summary Update Reports (PSUs)'' (VICH GL29). This draft guidance has been developed by the International Cooperation on Harmonisation of Technical Requirements for Registration of Veterinary Medicinal Products (VICH). This draft guidance is intended to describe the reporting system for identification of possible adverse events following the use of marketed veterinary medicinal products submitted to the European Union, Japan, and the United States.

DATES: Submit written or electronic comments on the draft guidance by January 14, 2002, to ensure their adequate consideration in preparation of the final document. General comments on agency guidance documents are welcome at any time.

ADDRESSES: Submit written requests for single copies of the draft guidance to the Communications Staff (HFV–12), Center for Veterinary Medicine (CVM), Food and Drug Administration, 7500 Standish Pl., Rockville, MD 20855. Send one self-addressed adhesive label to assist that office in processing your requests. See the **SUPPLEMENTARY INFORMATION** section for electronic access to the draft guidance document.

Submit written comments on the draft guidance to the Dockets Management Branch (HFA–305), Food and Drug Administration, 5630 Fishers Lane, rm. 1061, Rockville, MD 20852. Submit electronic comments to http://www.fda.gov/dockets/ecomments. Comments should be identified with the full title of the draft guidance and the docket number found in brackets in the heading of this document.

FOR FURTHER INFORMATION CONTACT: William C. Keller, Center for Veterinary Medicine (HFV–210), Food and Drug Administration, 7500 Standish Pl., Rockville, MD 20855, 301–827–6642, e-mail: wkeller@cvm.fda.gov.

SUPPLEMENTARY INFORMATION:

I. Background

In recent years, many important initiatives have been undertaken by regulatory authorities and industry associations to promote the international harmonization of regulatory requirements. FDA has participated in efforts to enhance harmonization and has expressed its commitment to seek scientifically based harmonized technical procedures for the development of pharmaceutical products. One of the goals of harmonization is to identify and then reduce differences in technical requirements for drug development among regulatory agencies in different countries.

FDA has actively participated in the International Conference on Harmonisation of Technical Requirements for Approval of Pharmaceuticals for Human Use for several years to develop harmonized technical requirements for the approval of human pharmaceutical and biological products among the European Union, Japan, and the United States. The VICH is a parallel initiative for veterinary medicinal products. The VICH is concerned with developing harmonized technical requirements for the approval of veterinary medicinal products in the European Union, Japan, and the United States, and includes input from both regulatory and industry representatives.

The VICH Steering Committee is composed of member representatives from the European Commission, European Medicines Evaluation Agency; European Federation of Animal Health; Committee on Veterinary Medicinal Products; FDA; the U.S. Department of Agriculture; the Animal Health Institute; the Japanese Veterinary Pharmaceutical Association; the Japanese Association of Veterinary Biologics; and the Japanese Ministry of Agriculture, Forestry, and Fisheries.

Two observers are eligible to participate in the VICH Steering

Committee: One representative from the Government of Australia/New Zealand and one representative from the industry in Australia/New Zealand. The VICH Secretariat, which coordinates the preparation of documentation, is provided by the Confédération Mondiale de L'Industrie de la Santé Animale (COMISA). A COMISA representative also participates in the VICH Steering Committee meetings.

II. Draft Guidance on Management of Periodic Summary Update Reports

The VICH Steering Committee held a meeting on June 28, 2001, and agreed that the draft guidance document entitled ''Pharmacovigilance of Veterinary Medicinal Products: Management of Periodic Summary Update Reports (PSUs)'' should be made available for public comment.

This draft guidance should be read in conjunction with the VICH guidance document entitled ''Pharmacovigilance of Veterinary Medicinal Products: Management of Adverse Event Reports (AERs)'' (VICH GL24) that defines the PSU.

The draft guidance describes harmonized submission timing and submission content for PSU reports. Harmonization of those elements between the VICH regions facilitates the reporting responsibilities for the marketing authorities or drug sponsors, many with worldwide activities. More specifically, the draft guidance presents the terms and definitions intended to harmonize other previously used terms referring to similar pharmacovigilance concepts. The draft guidance describes the various components of information flow within the pharmacovigilance system. Finally, the draft guidance defines data elements that are sufficiently comprehensive to cover complex reports from most sources for the purpose of electronic transmission.

FDA and the VICH Safety Working Group will consider comments about the draft guidance document. Ultimately, FDA intends to adopt the VICH Steering Committee's final guidance and publish it as a final guidance. (Information collection is covered under OMB control number 0910– 0012.)

III. Significance of Guidance

This draft document, developed under the VICH process, has been revised to be consistent with FDA's good guidance practices regulation (21 CFR 10.115). For example, the document has been designated ''guidance'' rather than ''guideline.'' Because guidance documents are not binding, mandatory words such as ''must,'' ''shall,'' and ''will'' in the original VICH documents have been substituted with ''should.'' Similarly, words such as ''require'' or ''requirement'' have been replaced by ''recommendation'' or ''recommended'' as appropriate to the context.

The draft guidance represents the agency's current thinking on management of PSUs of approved new animal drugs. This guidance does not create or confer any rights for or on any person and will not operate to bind FDA or the public. An alternative method may be used as long as it satisfies the requirements of applicable statutes and regulations.

IV. Comments

This draft guidance document is being distributed for comment purposes only and is not intended for implementation at this time. Interested persons may submit written or electronic comments regarding this draft guidance document. Written or electronic comments should be submitted to the Dockets Management Branch (address above). Submit written or electronic comments by January 14, 2002, to ensure adequate consideration in preparation of the final guidance. Two copies of any comments are to be submitted, except that individuals may submit one copy. Comments are to be identified with the docket number found in brackets in the heading of this document. A copy of the draft guidance and received comments are available for public examination in the Dockets Management Branch between 9 a.m. and 4 p.m., Monday through Friday.

V. Electronic Access

Electronic comments may be submitted electronically on the Internet at http://www.fda.gov/dockets/ecomments. Once on this Internet site, select [Docket No. 01D–0501] ''Pharmacovigilance of Veterinary Medicinal Products: Management of Periodic Summary Update Reports (PSUs)'' (VICH GL29) and follow the directions.

Copies of the draft guidance entitled ''Pharmacovigilance of Veterinary Medicinal Products: Management of Periodic Summary Update Reports (PSUs)'' (VICH GL29) may be obtained on the Internet from the CVM home page at http://www.fda.gov/cvm.

Dated: December 3, 2001.

Margaret M. Dotzel,

Associate Commissioner for Policy.

[FR Doc. 01–30766 Filed 12–12–01; 8:45 am]

BILLING CODE 4160–01–S

DEPARTMENT OF THE INTERIOR

Fish and Wildlife Service

Notice of Availability of a Draft Addendum to the Recovery Plan for the Multi-Island Plants for Public Review and Comment

AGENCY: Fish and Wildlife Service, Interior.

ACTION: Notice of document availability.

SUMMARY: We, the U.S. Fish and Wildlife Service, announce the availability for public review of a draft Addendum to the Recovery Plan for the Multi-Island Plants. There are 10 plant taxa included in this plan, all of which are listed as endangered. All 10 taxa are endemic to the Maui Nui group of islands in the Hawaiian Islands.

DATE: We will consider comments on the draft addendum received by February 11, 2002.

ADDRESSES: Copies of the draft recovery plan addendum are available for inspection, by appointment, during normal business hours at the following locations: U.S. Fish and Wildlife Service, Pacific Islands Fish and Wildlife Office, 300 Ala Moana Boulevard, Room 3–122, Box 50088, Honolulu, Hawaii 96850 (phone 808/541–3441) and Hawaii State Library 478 S. King Street, Honolulu, Hawaii 96813. Requests for copies of the draft addendum and written comments and materials regarding this plan should be addressed to Paul Henson, Field Supervisor, Ecological Services, at the above U.S. Fish and Wildlife Service Honolulu address.

FOR FURTHER INFORMATION CONTACT: Christa Russell, Plant Conservation Program Coordinator, at the above U.S. Fish and Wildlife Service Honolulu address.

SUPPLEMENTARY INFORMATION:

Background

Restoring endangered or threatened animals and plants to the point where they are again secure, self-sustaining members of their ecosystems is a primary goal of the U.S. Fish and Wildlife Service's endangered species program. To help guide the recovery effort, we are working to prepare recovery plans for most of the listed species native to the United States. Recovery plans describe actions considered necessary for the conservation of the species, establish criteria for downlisting or delisting listed species, and estimate time and cost for implementing the recovery measures needed.

The Endangered Species Act of 1973, as amended (Act) (16 U.S.C. 1531 *et seq.*), requires the development of recovery plans for listed species unless such a plan would not promote the conservation of a particular species. Section 4(f) of the Act requires that public notice and an opportunity for public review and comment be provided during recovery plan development. We will consider all information presented during the public comment period prior to approval of each new or revised recovery plan. Substantive technical comments will result in changes to the plans. Substantive comments regarding recovery plan implementation may not necessarily result in changes to the recovery plans, but will be forwarded to appropriate Federal or other entities so that they can take these comments into account during the course of implementing recovery actions.

This draft Addendum to the Recovery Plan for the Multi-Island Plants covers 10 plant taxa, all of which are listed as endangered. These 10 Hawaiian plant taxa are endemic to the Maui Nui group of islands in the Hawaiian Islands. This group includes Maui, Molokai, Lanai, and Kahoolawe. Five taxa are endemic to the island of Maui, three taxa are endemic to the island of Lanai, one taxon is endemic to Molokai, and one taxon is endemic to the island of Kahoolawe. The listed plants are: *Clermontia samuellii* (oha wai), *Cyanea copelandii* ssp. *haleakalaensis* (haha), *Cyanea glabra* (haha), *Cyanea hamatiflora* ssp. *hamatiflora* (haha), *Dubautia plantaginea* ssp. *humilis* (naenae), *Hedyotis schlechtendahliana* var. *remyi* (kopa), *Kanaloa kahoolawensis* (kohe malama malama o Kanaloa), *Labordia tinifolia* var. *lanaiensis* (kamakahala), *Labordia triflora* (kamakahala), and *Melicope munroi* (alani).

The 10 taxa included in this draft addendum grow in a variety of vegetation communities (shrublands and forests), elevational zones (coastal to montane), and moisture regimes (dry to wet). These taxa and their habitats have been variously affected or are currently threatened by one or more of the following: competition for space, light, water, and nutrients by introduced vegetation; habitat degradation by wild, feral or domestic animals (pigs, goats, and deer); predation by animals (deer, pigs, goats, rats, slugs, and insects); substrate loss, and collecting for scientific or horticultural purposes. In addition, due to the small number of existing individuals and their very narrow distributions, these taxa and most of their populations are subject to an increased likelihood of extinction and/or reduced reproductive vigor from naturally occurring events such as hurricanes.

The objective of the addendum to the recovery plan is to provide a framework for the recovery of these 10 taxa so that their protection by the Endangered Species Act (ESA) is no longer necessary. The interim objective is to stabilize all existing populations of these 10 plants. To be considered stable, each taxon must be managed to control threats (e.g., fenced) and be represented in an *ex situ* (such as a nursery or arboretum) collection. In addition, a minimum total of three populations of each taxon should be documented on islands where they now occur or occurred historically. Each of these populations must be naturally reproducing and increasing in number, with a minimum of 25 mature individuals per population for long-lived perennials (*Kanaloa kahoolawensis* and *Melicope munroi*) and a minimum of 50 mature individuals per population for short-lived perennials (*Clermontia samuelii, Cyanea copelandii* ssp. *haleakalaensis, Cyanea glabra, Cyanea hamatiflora* ssp. *hamatiflora, Dubautia plantaginea, Hedyotis schlechtendahlia* var. *remyi, Labordia tinifolia* var. *lanaiensis,* and *Labordia triflora*).

For downlisting, a total of five to seven populations of each taxon should be documented on islands where they now occur or occurred historically. In certain cases, however, a particular taxon may be eligible for downlisting even if all five to seven of the populations are on only one island, provided all of the other recovery criteria have been met and the populations in question are widely distributed and secure enough that one might reasonably conclude that the taxon is not in danger of extinction throughout all or a significant part of its range.

Each of these populations must be naturally reproducing, stable or increasing in number, and secure from threats, with a minimum of 100 mature individuals per population for long-lived perennials and a minimum of 300 mature individuals per population for short-lived perennials. Each population should persist at this level for a minimum of 5 consecutive years before downlisting is considered. A total of 8 to 10 populations of each taxon should be documented on islands where they now occur or occurred historically. As with downlisting, there may be certain cases in which a particular taxon may be eligible for delisting even if all 8 to 10 of the populations are on only one island, provided all of the other recovery criteria have been met and the populations in question are widely distributed and secure enough that one might reasonably conclude that the taxon is not in danger of extinction throughout all or a significant part of its range. Each of these populations must be naturally reproducing, stable or increasing in number, and secure from threats, with a minimum of 100 mature individuals per population for long-lived perennials and a minimum of 300 mature individuals per population for short-lived perennials. Each population should persist at this level for a minimum of 5 consecutive years.

Public Comments Solicited

We solicit written comments on the recovery plan addendum described. All comments received by the date specified above will be considered prior to approval of this plan.

Authority: The authority for this action is section 4(f) of the Endangered Species Act, 16 U.S.C. 1533 (f).

Dated: August 22, 2001.

Rowan W. Gould,

Regional Director, Region 1, U.S. Fish and Wildlife Service.

[FR Doc. 01–30773 Filed 12–12–01; 8:45 am]

BILLING CODE 4310–55–P

DEPARTMENT OF THE INTERIOR

Bureau of Indian Affairs

Information Collection Submitted to the Office of Management and Budget for Renewal Under the Paperwork Reduction Act

AGENCY: Bureau of Indian Affairs, Interior.

ACTION: Notice.

SUMMARY: This notice announces the Information Collection Request for Adult Education Annual Report Form OMB #1076–0120 requires renewal. The information collection requirement, with no appreciable changes, is submitted to the Office of Management and Budget (OMB) for review, as required by the Paperwork Reduction Act of 1995.

DATES: Written comments must be submitted on or before January 14, 2002.

ADDRESSES: Comments are to be mailed to Office of Information and Regulatory Affairs, Office of Management and Budget, Attention: Desk Officer for the Department of the Interior, 725 17th Street, Washington, DC 20503. Copies of comments should be sent to William Mehojah, Director, Office of Indian Education Programs, Department of the Interior, Bureau of Indian Affairs, 1849

C St. NW, Mail Stop 3512–MIB, Washington, DC 20240, or hand delivered to room 3512 at the above address.

FOR FURTHER INFORMATION CONTACT: Garry Martin, Bureau of Indian Affairs, (202) 208–3478.

SUPPLEMENTARY INFORMATION:

I. Abstract

The information collection is necessary to assess the need for adult education programs under 25 CFR 46, subpart A, sections 46.20 Program Requirements and 46.30 Records and Reporting Requirements of the Adult Education Program.

We did not receive any comments on our **Federal Register** notice of August 31, 2001 (66 FR 46198). You may still send comments on this collection of information to the Office of Information and Regulatory Affairs, OMB at the address listed in **ADDRESSES** section. Please send copies of these comments to the Director of the Office of Indian Education Programs at the address listed in the **ADDRESSES** section.

II. Method of Collection

The Adult Education Program regulations under 25 CFR 46, subpart A, contain the program requirements which govern the program. Information collected from the contractors will be used for administrative planning, setting long- and short-term goals, and analyzing and monitoring the use of funds.

III. Data

Title of the Collection of Information: Bureau of Indian Affairs Adult Education Program Annual Report Form.

OMB Number: 1076–0120; Expiration Date: November 30, 2001.

Type of Review: Renewal of a currently approved information collection.

Summary of the Collection of Information: The collection of information provides pertinent data on the adult education programs.

Description of the need for the information and proposed use of the information: Submission of this information is necessary to assess the need for adult education programs. The information is needed for the utilization and management of program resources to provide education opportunities for adult American Indians and Alaska Natives to complete high school requirements, and to gain new skills and knowledge for individual student self-enhancement. The information collected with the annual report will be used by the Bureau or tribally-controlled programs for fiscal accountability and appropriate direct services documentation. The results of the data are used for administrative planning.

Affected Entities: Tribal adult education contractors.

Estimated number of respondents: 70. Respondents are tribal adult education program administrators.

Proposed frequency of responses: Annually.

Burden: The estimate of total annual reporting and record keeping burden that will result from the collection of information: Reporting 4 hours per response × 70 respondents = 280 hours.

Estimated Annual Costs: $5,040.00 (4 hours × 70 × $18.00 = salary dollars).

IV. Request for Comments

The Department of the Interior invites comments on:

(a) Whether the collection of information is necessary for the proper performance of the functions of the agency, including whether the information will have practical utility;

(b) The accuracy of the agency's estimate of the burden (including the hours and cost) of the proposed collection of information, including the validity of the methodology and assumption used;

(c) Ways to enhance the quality, utility, and clarity of the information to be collected; and

(d) Ways to minimize the burden of the collection of information on those who are to respond, including through the use of appropriate automated, electronic, mechanical, or other collection techniques or other forms of information technology.

Burden means the total time, effort, or financial resources expended by persons to generate, maintain, retain, disclose or provide information to a Federal agency. This includes the time needed to review instructions; to develop, acquire, install and utilize technology and systems for the purpose of collecting, validating, and verifying information, processing and maintaining information, and disclosing and providing information, to search data sources, to complete and review the collection of information; and to transmit or otherwise disclose the information.

An agency may not conduct or sponsor, and a person is not required to respond to, a collection of information, unless it displays a currently valid Office of Management and Budget Control Number.

This notice is published under the authority delegated by the Secretary of the Interior to the Assistant Secretary—Indian Affairs by 209 Departmental Manual 8.1.

Dated: November 19, 2001.

Neal A. McCaleb,

Assistant Secretary—Indian Affairs.

[FR Doc. 01–30770 Filed 12–12–01; 8:45 am]

BILLING CODE 4310–02–P

DEPARTMENT OF THE INTERIOR

Bureau of Land Management

Notice of Realty Action for Proposed Land Use Permit on Public Lands Near Fairbanks, AK

Authority: 43 U.S.C. 1732.

AGENCY: Bureau of Land Management, Interior.

ACTION: Notice to the public that certain public lands are available for a non-Federal use.

SUMMARY: The Gas Producers Pipeline Team is comprised of BP Exploration (Alaska), Inc.; ExxonMobil Production Company; and Phillips Alaska, Inc. The Gas Producers Pipeline Team has applied for a permit to use public lands near Fairbanks, Alaska, for a non-Federal purpose. The Bureau of Land Management has determined the lands are available for this use and that publication of this Notice of Realty Action is necessary pursuant to BLM manual 2920.4.

DATES: Submit comments on or before January 7, 2002.

ADDRESSES: Address all comments concerning this notice to Robert Schneider, Field Manager, Northern Field Office, BLM, 1150 University Ave., Fairbanks, AK 99709–3844.

FOR FURTHER INFORMATION CONTACT: Lon Kelly, 907–474–2368.

SUPPLEMENTARY INFORMATION: The Gas Producers Pipeline Team has applied for a permit to use public lands for certain trials of trenching technology. The BLM has determined the lands are available for this non-Federal use. The decision on authorization of the non-Federal use will be made after an evaluation of the application. The application has been assigned the serial number FF093460.

The proposed permit would grant exclusive use of specific public lands for a period of time not to exceed one year, and non-exclusive use for an additional period. The permit would authorize the use of these public lands to conduct trials of trenching machines and related techniques. This work would help assess the potential of trenching technology for use in the

eventual construction of a gas pipeline in Alaska.

The proposed action is in conformance with the White Mountains National Recreation Area Resource Management Plan, dated February 6, 1986.

The parcel proposed for permitting under provisions of section 302 of the Federal Land Policy and Management Act (FLPMA) of 1976 and 43 CFR 2920 is described as follows:

Fairbanks Meridian, Alaska

T.4 N., R.2W., secs. 25 and 31

The parcel affected by the proposed permit is near Washington Creek, just off the Elliott Highway, approximately 20 statute miles north of Fairbanks, Alaska. The test trench site is approximately 800 feet by 2000 feet and encompasses about 36.7 acres. A driveway about 200 feet long will connect the test site with the Elliott Highway. The lands are currently undeveloped. The proposed permit would authorize the digging and rehabilitation of 13 trenches, requiring the removal and replacement of 45,000 cubic yards of material for the trenches. Rent would not be less than the appraised fair market value.

For a period of 25 days from the date of publication of this Notice in the **Federal Register**, interested parties may submit comments to the Northern Field Office Manager at the above address. The 25-day comment period, rather than the customary 45-day period, is necessary to allow expedited evaluation of comments and processing of the permit so work can begin during February 2002, if the application is approved. The work must be conducted in typical winter conditions if the necessary data are to be collected, and a later start would amount to a one-year delay. The BLM manual requires notices of realty action to be published in the **Federal Register**, and then published in a local newspaper for the following three weeks.

In the absence of adverse comments, the application for the proposed use will be processed in accordance with normal procedures.

Dated: December 10, 2001.

Carson W. Culp,

Assistant Director, Minerals, Realty & Resource Protection.

[FR Doc. 01–30864 Filed 12–12–01; 8:45 am]

BILLING CODE 4310–JA–P

DEPARTMENT OF THE INTERIOR

Bureau of Reclamation

Information Collection Activities; Proposed Collection; Comment Request

AGENCY: Bureau of Reclamation, Interior.

ACTION: Notice and request for comments.

SUMMARY: In accordance with the Paperwork Reduction Act to 1995, this notice announces that the Bureau of Reclamation (Reclamation) intends to seek approval of the following proposed new information collection: Ririe Reservoir Recreation Survey. Before submitting the information collection request to the Office of Management and Budget for approval, Reclamation is soliciting comments on specific aspects of the information collection.

DATES: Comments on this notice must be received by February 11, 2002.

ADDRESSES: Address all comments concerning this notice to Bureau of Reclamation, Pacific Northwest Regional Office, Attention Ms. Vicki Kellerman, 1150 N. Curtis Road, Suite 100, Boise, Idaho 83706.

FOR FURTHER INFORMATION CONTACT: For further information or a copy of the proposed collection of information form, contact Ms. Vicki Kellerman at (208) 378–5326.

SUPPLEMENTARY INFORMATION: Comments are invited on: (a) Whether the proposed collection of information is necessary for the proper performance of Reclamation's functions, including whether the information will have practical use; (b) the accuracy of Reclamation's estimated time and cost burdens of the proposed collection of information, including the validity of the methodology and assumptions used; (c) ways to enhance the quality, use, and clarity of the information to be collected; and (d) ways to minimize the burden of the collection of information on respondents, including increased use of automated collection techniques or other forms of information technology. Consideration will be given to comments and suggestions submitted with 60 days of this publication.

Title: Ririe Reservoir Recreation Survey.

Abstract: Ririe Reservoir is located on Willow Creek, a minor tributary of the Snake River in Bonneville County of eastern Idaho. Ririe Reservoir has recreation attributes that serve Idaho Falls, Ririe, and southeastern Idaho, as well as out-of-state visitors. Primary summer activities consist of boating, swimming, fishing, camping, and picnicking. In general the survey will be used to determine carrying capacity for recreation uses on both Reclamation lands and water, and necessary management actions related to recreation, as identified in the Resource Management Plan for this reservoir. Further, the survey will determine if and when boat ramps, docks, parking, and other facilities need to be expanded for recreation during the next 10 years and if the expansion can be accomplished without detriment to natural, recreational, and cultural resources.

Description of respondents: Ririe Reservoir recreationists from Idaho Falls, Ririe, southeastern Idaho, and an indeterminate diversity of out-of-state visitors to Ririe Reservoir.

Frequency: This is a one-time voluntary survey.

Estimated completion time: An average of 30 minutes per respondent.

Annual responses: 250 respondents.

Annual burden hours: 125.

Our practice is to make comments, including names and home addresses of respondents, available for public review. Individual respondents may request that we withhold their home address from public disclosure, which we will honor to the extent allowable by law. There also may be circumstances in which we would withhold a respondent's identity from public disclosure, as allowable by law. If you wish us to withhold your name and/or address, you must state this prominently at the beginning of your comment. We will make all submissions from organizations or businesses, and from individuals identifying themselves as representatives or officials of organizations or businesses, available for public disclosure in their entirety.

Dated: November 20, 2001.

Jerrold D. Gregg,

Snake River Office, Area Manager.

[FR Doc. 01–30774 Filed 12–12–01; 8:45 am]

BILLING CODE 4310–MN–M

DEPARTMENT OF THE INTERIOR

Bureau of Reclamation

Tualatin Basin Water Supply Feasibility Study, Portland, OR

AGENCY: Bureau of Reclamation, Interior.

ACTION: Notice of intent to prepare a Planning Report/Environmental Impact Statement.

SUMMARY: Pursuant to section 102(2)(C) of the National Environmental Policy

Act (NEPA) of 1969, as amended, the Bureau of Reclamation (Reclamation) intends to prepare a Planning Report/Environmental Impact Statement (PR/EIS) to identify alternatives to meet future water supply needs in the Tualatin River Basin in Oregon. The purpose of the PR/EIS is to evaluate alternative methods of meeting future water supply needs for river flow restoration, municipal water, and agricultural irrigation. The Water Managers Group (WMG), an organization representing municipal water suppliers, agricultural water users, wastewater and stormwater managers, and county facilities managers, indicate that 50,000 additional acre-feet (15 billion gallons) of water per year could be needed by the year 2050 to meet demands in the three water-use sectors of river flow restoration, municipal and industrial demand, and agricultural demand. Reclamation is working with the WMG to evaluate alternatives to meeting this water supply demand because some of the alternatives involve Federal action. Although the study may result in a preferred alternative that does not involve a Federal action, Reclamation is initiating the PR/EIS process to provide appropriate public involvement and assessment of environmental impacts should a Federal action be selected for implementation. Reclamation is requesting public comment and agency input to help identify significant issues related to water supply in the Tualatin Basin to be addressed in the PR/EIS.

DATES: Scoping meetings will be held on the following dates and times:

- Hillsboro,

OR:

January 8, 2002; 2 to 4 p.m. and 6 to 8 p.m.

- Portland,

OR:

January 9, 2002; 2 to 4 p.m. and 6 to 8 p.m.

Written comments will be accepted through January 16, 2002 for inclusion in the scoping summary document.

ADDRESSES: Comments and requests to be added to the mailing list may be submitted to Bureau of Reclamation, 1150 N. Curtis Road, Suite 100, Mail Code: PN–6303, Boise, ID 83706–1234.

The scoping meetings will be held at the following locations:

- Hillsboro: Clean Water Services, 2550 Hillsboro Hwy. (Hwy. 219), Hillsboro,

OR

- Portland: Metro Council Chambers, 600 NE Grand Ave., Portland, OR

The meeting facilities are physically accessible to people with disabilities. Please direct requests for sign language interpretation for the hearing impaired, or other auxiliary aids, to Mike Relf by December 31, 2001 at the telephone, fax or TTY relay numbers listed under the ''For Additional Information'' section of this notice.

FOR FURTHER INFORMATION CONTACT: Mike Relf, Activity Manager, Pacific Northwest Regional Office, Bureau of Reclamation, (208) 378–5106, fax: (208) 378–5066, or at (208) 378–5106 via toll free TTY relay (800) 833–6388.

SUPPLEMENTARY INFORMATION:

Public Disclosure

Our practice is to make comments, including names and home addresses of respondents, available for public review. Individual respondents may request that we withhold their home address from public disclosure, which we will honor to the extent allowable by law. There also may be circumstances in which we would withhold a respondent's identity from public disclosure, as allowable by law. If you wish us to withhold your name and/or address, you must state this prominently at the beginning of your comment. We will make all submissions from organizations or businesses, and from individuals identifying themselves as representatives or officials of organizations or businesses, available for public disclosure in their entirety.

Background

Reclamation is the owner and operator of Scoggins Dam, completed in 1975, which is located on Scoggins Creek, a tributary of the Tualatin River. Henry Hagg Lake, with a storage capacity of 53,600 acre-feet (16.1 billion gallons), is the impoundment created by Scoggins Dam. Stored water in Henry Hagg Lake is currently used for river flow restoration, municipal water supply, and agricultural irrigation throughout the Tualatin River Basin. Henry Hagg Lake also provides park and recreational facilities that are operated by Washington County.

In 1997, a group of public and private agencies charged with managing water resources in the Tualatin Basin began a planning process to evaluate resource and environmental needs within the Basin. The objective was to develop long-term water resource management strategies, as part of a collaborative process. The participating agencies included Clean Water Services and the Joint Water Commission (composed of the cities of Hillsboro, Beaverton, Forest Grove, and the Tualatin Valley Water District), the City of Tigard, Tualatin Valley Irrigation District, Washington County, the Oregon Water Resources Department, and the Lake Oswego Corporation. Results and conclusions of the planning process were described in the 2001 Integrated Water Resources Management (IWRM) Strategy. The IWRM Strategy indicated that 50,000 additional acre-feet (15 billion gallons) of water per year could be needed by the year 2050 to meet demands in the three water-use sectors of river flow restoration, municipal and industrial demand, and agricultural demand.

River Flow Restoration: The IWRM Project identified potential major water supply deficits by the year 2050 in the Tualatin Basin. A major component of unmet need in the Tualatin Basin is water for flow restoration in the Tualatin River. The Tualatin River historically experiences low flows in the summer months, and yields less than 2 percent of its total annual discharge between the months of June and September. Low water flows coupled with high ambient phosphorous levels and high temperatures have created chronic water quality problems, particularly in the lower reaches of the River's mainstem. Impacts from urban development, farming and increased water withdrawals have contributed to the degradation of water quality in the Tualatin River and its tributaries. Clean Water Services is the agency responsible for meeting Federal and state water quality standards established for the River and its major tributaries. Numerical standards have been established by the Oregon Department of Environmental Quality (DEQ) for nutrients, bacteria, dissolved oxygen, and temperature. As one strategy to meet these standards, Clean Water Services maintains contracts for the release of stored water from Henry Hagg Lake and the Barney Reservoir to augment river flow. However, additional flow augmentation is needed in order to meet water quality standards. Clean Water Services has also been charged by the Washington County Board of Commissioners to coordinate the Tualatin watershed's Endangered Species Act (ESA) response to the listing of upper Willamette spring Chinook and winter steelhead as threatened species. The ESA may require higher instream flows and/or changes to flow patterns during critical seasons. For these reasons, Clean Water Services is interested in exploring options for long-term water supply in the Tualatin Basin.

Municipal and industrial demand: Twelve cities are located in the Tualatin Basin, serving a population of 450,000. Current municipal and industrial (M&I) demands total about 10 billion gallons

in the summer months. For the municipalities in the Tualatin Basin, summer-time demand (defined as demand between the months of June and September) must be met by stored supplies in Henry Hagg Lake, the Barney Reservoir (owned by the Joint Water Commission) and by the City of Portland's Bull Run reservoirs. Currently, approximately 30 percent of the M&I demand in the Tualatin Basin is met by importing water from the Bull Run watershed east of Portland. M&I demands are projected to approximately double due to population growth in Washington County over the next 50 years. By 2050, approximately 20 billion gallons (67,000 acre-feet) of stored supply will be needed. This projected summer demand exceeds the capacity of the current supply system. For this reason, the cities in the Tualatin Basin are interested in exploring options for long-term water supply.

Agricultural demand: The Tualatin Valley Irrigation District (TVID) is currently authorized by Federal contract with Reclamation to irrigate up to 17,000 acres in the Tualatin Valley. Natural flows from the Tualatin River are used to supply irrigation needs at the beginning of the season. As river flows decrease, the TVID uses stored water in Henry Hagg Lake to meet irrigation demand. In addition, an undetermined number of agricultural water users are exercising individual water rights to natural flows on the Tualatin River and its tributaries. Trends in agricultural water demand in the Tualatin Basin will depend on population growth patterns, crop types, and market value for agricultural products. Future water supply planning should be able to provide the flexibility to meet increased need for irrigation, or for decreased need for irrigation supply due to increased conservation and efficiency. Even if water demands do not increase over time in this sector, shifts may occur in where and when irrigators withdraw water from the River and its tributaries. These changes may be required as a response to the ESA or other environmental regulations. New water supply projects in the Basin may also cause a shift in demand patterns. For these reasons, long term water supply planning must consider agricultural water use.

Alternatives To Be Considered in the PR/EIS

A range of water supply options will be used to develop alternatives for evaluation in the PR/EIS process. These options currently include, but are not limited to, the following:

- Conserve and reuse water;
- Construct a pipeline to provide irrigation water from the Willamette River;
- Increase the height of Scoggins Dam by 20 feet or by 40 feet;
- Construct impoundments on other tributaries of the Tualatin River;
- Import additional water from other regional water supply sources; and
- No action.

Issues To Be Investigated by the Study

Major issues that will be addressed by the PR/EIS include:

- Engineering feasibility of water supply options;
- Biological evaluation of impacts of water supply options, including wildlife and wildlife habitat, wetlands, fisheries, and special-status species;
- Economics;
- Surface and ground water hydrology;
- Water quality;
- Soils and geology;
- Outdoor recreation;
- Social well-being;
- Environmental justice;
- Sacred Sites;
- Indian trust assets (ITAs); and
- Cultural resources.

Dated: November 27, 2001.

J. William McDonald,

Regional Director, Pacific Northwest Region.

[FR Doc. 01–30775 Filed 12–12–01; 8:45 am]

BILLING CODE 4310–MN–P

DEPARTMENT OF JUSTICE

Drug Enforcement Administration

[DEA #223E]

Controlled Substances: Established Initial Aggregate Production Quotas for 2002

AGENCY: Drug Enforcement Administration (DEA), Justice.

ACTION: Notice of aggregate production quotas for 2002.

SUMMARY: This notice establishes initial 2002 aggregate production quotas for controlled substances in Schedules I and II of the Controlled Substances Act (CSA).

EFFECTIVE DATE: December 13, 2001.

FOR FURTHER INFORMATION CONTACT: Frank L. Sapienza, Chief, Drug & Chemical Evaluation Section, Drug Enforcement Administration, Washington, D.C. 20537, Telephone: (202) 307–7183.

SUPPLEMENTARY INFORMATION: Section 306 of the CSA (21 U.S.C. 826) requires that the Attorney General establish aggregate production quotas for each basic class of controlled substance listed in Schedules I and II. This responsibility has been delegated to the Administrator of the DEA by § 0.100 of Title 28 of the Code of Federal Regulations.

The 2002 aggregate production quotas represent those quantities of controlled substances that may be produced in the United States in 2002 to provide adequate supplies of each substance for: the estimated medical, scientific, research and industrial needs of the United States; lawful export requirements; and the establishment and maintenance of reserve stocks (21 U.S.C. 826(a) and 21 CFR 1303.11). These quotas do not include imports of controlled substances for use in industrial processes.

On November 13, 2001, a notice of the proposed initial 2002 aggregate production quotas for certain controlled substances in Schedules I and II was published in the **Federal Register** (66 FR 56860). All interested persons were invited to comment on or object to these proposed aggregate production quotas on or before December 4, 2001.

Nine companies commented on a total of thirty-five Schedules I and II controlled substances within the published comment period. The companies commented that the proposed aggregate production quotas for 4-methoxyamphetamine, alfentanil, amphetamine, codeine (for sale), codeine (for conversion), codeine-N-oxide, dextropropoxyphene, difenoxin, dihydrocodeine, diphenoxylate, ecgonine, fentanyl, gamma-hydroxybutyric acid, heroin, hydrocodone (for sale), hydromorphone, meperidine, methadone (for sale), methadone intermediate, methylphenidate, morphine (for sale), morphine (for conversion), morphine-N-oxide, norlevorphanol, normorphine, noroxymorphone (for conversion), opium, oxycodone (for sale), oxycodone (for conversion), oxymorphone, pentobarbital, phenylacetone, secobarbital, sufentanil and thebaine were insufficient to provide for the estimated medical, scientific, research and industrial needs of the United States, for export requirements and for the establishment and maintenance of reserve stocks.

DEA has taken into consideration the above comments along with the relevant 2001 manufacturing quotas, current 2001 sales and inventories, 2002 export requirements and research and product development requirements. Based on this information, the DEA has adjusted the initial aggregate production quotas for alfentanil, codeine (for sale), codeine-N-oxide, dextropropoxyphene,

dihydrocodeine, diphenoxylate, heroin, marihuana, meperidine, methadone intermediate, morphine (for sale), morphine-N-oxide, norlevorphanol, normorphine, opium, oxycodone (for conversion), oxymorphone, phenylacetone, secobarbital and sufentanil to meet the legitimate needs of the United States.

Regarding 4-methoxyamphetamine, amphetamine, codeine (for conversion), difenoxin, ecgonine, fentanyl, gamma-hydroxybutyric acid, hydrocodone (for sale), hydromorphone, methadone (for sale), methylphenidate, morphine (for conversion), noroxymorphone (for conversion), oxycodone (for sale), pentobarbital and thebaine, the DEA has determined that the proposed initial 2002 aggregate production quotas are sufficient to meet the current 2002 estimated medical, scientific, research and industrial needs of the United States.

Pursuant to Part 1303 of Title 21 of the Code of Federal Regulations, the Administrator of the DEA will, in early 2002, adjust aggregate production quotas and individual manufacturing quotas allocated for the year based upon 2001 year-end inventory and actual 2001 disposition data supplied by quota recipients for each basic class of Schedule I or II controlled substance.

Therefore, under the authority vested in the Attorney General by section 306 of the Controlled Substances Act of 1970 (21 U.S.C. 826), and delegated to the Administrator of the DEA by § 0.100 of Title 28 of the Code of Federal Regulations, the Administrator hereby orders that the 2002 initial aggregate production quotas for the following controlled substances, expressed in grams of anhydrous acid or base, be established as follows:

Basic class	Established initial 2002 quotas
Schedule I	
2,5-Dimethoxyamphetamine	12,501,000
2,5-Dimethoxy-4-ethylamphetamine (DOET)	2
3-Methylfentanyl	4
3-Methylthiofentanyl	2
3,4-Methylenedioxyamphetamine (MDA)	15
3,4-Methylenedioxy-N-ethylamphetamine (MDEA)	15
3,4-Methylenedioxymethamphetamine (MDMA)	15
3,4,5-Trimethoxyamphetamine	2
4-Bromo-2,5-Dimethoxyamphetamine (DOB)	2
4-Bromo-2,5-Dimethoxyphenethylamine (2–CB)	2
4-Methoxyamphetamine	7
4-Methylaminorex	2
4-Methyl-2,5-Dimethoxyamphetamine (DOM)	2
5-Methoxy-3,4-Methylenedioxyamphetamine	2
Acetyl-alpha-methylfentanyl	2
Acetyldihydrocodeine	2
Acetylmethadol	2
Allylprodine	2
Alphacetylmethadol	7
Alpha-ethyltryptamine	2
Alphameprodine	2
Alphamethadol	2
Alpha-methylfentanyl	2
Alpha-methylthiofentanyl	2
Aminorex	7
Benzylmorphine	2
Betacetylmethadol	2
Beta-hydroxy-3-methylfentanyl	2
Beta-hydroxyfentanyl	2
Betameprodine	2
Betamethadol	2
Betaprodine	2
Bufotenine	2
Cathinone	9
Codeine-N-oxide	52
Diethyltryptamine	2
Difenoxin	9,000
Dihydromorphine	1,101,000
Dimethyltryptamine	3
Gamma-hydroxybutyric acid	7
Heroin	9
Hydroxypethidine	2
Lysergic acid diethylamide (LSD)	46
Marihuana	840,000
Mescaline	7
Methaqualone	9
Methcathinone	9
Morphine-N-oxide	52
N,N-Dimethylamphetamine	7
N-Ethyl-1-Phenylcyclohexylamine (PCE)	5
N-Ethylamphetamine	7
N-Hydroxy-3,4-Methylenedioxyamphetamine	2

Basic class	Established initial 2002 quotas
Noracymethadol	2
Norlevorphanol	52
Normethadone	7
Normorphine	57
Para-fluorofentanyl	2
Pholcodine	2
Propiram	415,000
Psilocybin	2
Psilocyn	2
Tetrahydrocannabinols	131,000
Thiofentanyl	2
Trimeperidine	2
Schedule II	
1-Phenylcyclohexylamine	12
1-Piperidinocyclohexanecarbonitrile (PCC)	10
Alfentanil	902
Alphaprodine	2
Amobarbital	451,000
Amphetamine	13,964,000
Carfentanil	120
Cocaine	251,000
Codeine (for sale)	43,494,000
Codeine (for conversion)	59,051,000
Dextropropoxyphene	136,696,000
Dihydrocodeine	534,000
Diphenoxylate	708,000
Ecgonine	51,000
Ethylmorphine	12
Fentanyl	440,000
Glutethimide	2
Hydrocodone (for sale)	23,825,000
Hydrocodone (for conversion)	13,500,000
Hydromorphone	1,409,000
Isomethadone	12
Levo-alphacetylmethadol (LAAM)	12
Levomethorphan	2
Levorphanol	37,000
Meperidine	10,037,000
Metazocine	1
Methadone (for sale)	12,705,000
Methadone Intermediate	19,081,000
Methamphetamine	2,315,000
325,000 grams of levo-desoxyephedrine for use in a non-controlled, non-prescription product; 1,950,000 grams for methamphetamine for conversion to a Schedule III product; and 40,000 grams for methamphetamine (for sale)	
Methylphenidate	17,618,000
Morphine (for sale)	17,533,000
Morphine (for conversion)	110,774,000
Nabilone	2
Noroxymorphone (for sale)	25,000
Noroxymorphone (for conversion)	6,000,000
Opium	700,000
Oxycodone (for sale)	40,109,000
Oxycodone (for conversion)	700,000
Oxymorphone	454,000
Pentobarbital	27,728,000
Phencyclidine	21
Phenmetrazine	2
Phenylacetone	10,218,000
Secobarbital	1,002
Sufentanil	2,100
Thebaine	59,090,000

The Administrator further orders that aggregate production quotas for all other Schedules I and II controlled substances included in §§ 1308.11 and 1308.12 of Title 21 of the Code of Federal Regulations be established at zero.

The Office of Management and Budget has determined that notices of aggregate production quotas are not subject to centralized review under Executive Order 12866.

This action does not preempt or modify any provision of state law; nor does it impose enforcement

responsibilities on any state; nor does it diminish the power of any state to enforce its own laws. Accordingly, this action does not have federalism implications warranting the application of Executive Order 13132.

The Administrator hereby certifies that this action will have no significant impact upon small entities whose interests must be considered under the Regulatory Flexibility Act, 5 U.S.C. 601 *et seq.* The establishment of aggregate production quotas for Schedules I and II controlled substances is mandated by law and by international treaty obligations. The quotas are necessary to provide for the estimated medical, scientific, research and industrial needs of the United States, for export requirements and the establishment and maintenance of reserve stocks. While aggregate production quotas are of primary importance to large manufacturers, their impact upon small entities is neither negative nor beneficial. Accordingly, the Administrator has determined that this action does not require a regulatory flexibility analysis.

This action meets the applicable standards set forth in sections 3(a) and 3(b)(2) of Executive Order 12988 Civil Justice Reform.

This action will not result in the expenditure by State, local, and tribal governments, in the aggregate, or by the private sector, of $100,000,000 or more in any one year, and will not significantly or uniquely affect small governments. Therefore, no actions were deemed necessary under the provisions of the Unfunded Mandates Reform Act of 1995.

This action is not a major rule as defined by Section 804 of the Small Business Regulatory Enforcement Fairness Act of 1996. This action will not result in an annual effect on the economy of $100,000,000 or more; a major increase in costs or prices; or significant adverse effects on competition, employment, investment, productivity, innovation, or on the ability of United States-based companies to compete with foreign-based companies in domestic and export markets.

The Drug Enforcement Administration makes every effort to write clearly. If you have suggestions as to how to improve the clarity of this regulation, call or write Frank L. Sapienza, Chief, Drug & Chemical Evaluation Section, Office of Diversion Control, Drug Enforcement Administration, Washington, DC 20537, Telephone: (202) 307–7183.

Dated: December 7, 2001.

Asa Hutchinson,

Administrator.

[FR Doc. 01–30821 Filed 12–12–01; 8:45 am]

BILLING CODE 4410–09–P

DEPARTMENT OF JUSTICE

Parole Commission

[(Public Law 94–409) (5 U.S.C. Sec. 552b)]

Record of Vote of Meeting Closure

I, Edward F. Reilly, Jr., Chairman of the United States Parole Commission, was present at a meeting of said Commission which started at approximately 11 a.m. on Thursday, December 6, 2001; at the U.S. Parole Commission, 5550 Friendship Boulevard, 4th Floor, Chevy Chase, Maryland 20815. The purpose of the meeting was to decide one appeal from the National Commissioners' decisions pursuant to 28 CFR section 2.27 and the Approval of the Hearing Examiner Appointment. Three Commissioners were present, constituting a quorum when the vote to close the meeting was submitted.

Public announcement further describing the subject matter of the meeting and certifications of General Counsel that this meeting may be closed by vote of the Commissioners present were submitted to the Commissioners prior to the conduct of any other business. Upon motion duly made, seconded, and carried, the following Commissioners voted that the meeting be closed: Edward F. Reilly, Jr., Michael J. Gaines, and John R. Simpson.

In Witness Whereof, I make this official record of the vote taken to close this meeting and authorize this record to be made available to the public.

Dated: December 6, 2001.

Edward F. Reilly, Jr.,

Chairman, U.S. Parole Commission.

[FR Doc. 01–30881 Filed 12–11–01; 10:40 am]

BILLING CODE 4410–01–M

DEPARTMENT OF LABOR

Pension and Welfare Benefits Administration

[Application No. D–10852, et al.]

Proposed Exemptions; Rockford Corporation 401(k) Retirement Savings Plan (the Plan) et al.

AGENCY: Pension and Welfare Benefits Administration, Labor.

ACTION: Notice of proposed exemptions.

SUMMARY: This document contains notices of pendency before the Department of Labor (the Department) of proposed exemptions from certain of the prohibited transaction restrictions of the Employee Retirement Income Security Act of 1974 (the Act) and/or the Internal Revenue Code of 1986 (the Code).

Written Comments and Hearing Requests

All interested persons are invited to submit written comments or request for a hearing on the pending exemptions, unless otherwise stated in the Notice of Proposed Exemption, within 45 days from the date of publication of this **Federal Register** notice. Comments and requests for a hearing should state: (1) The name, address, and telephone number of the person making the comment or request, and (2) the nature of the person's interest in the exemption and the manner in which the person would be adversely affected by the exemption. A request for a hearing must also state the issues to be addressed and include a general description of the evidence to be presented at the hearing.

ADDRESSES: All written comments and requests for a hearing (at least three copies) should be sent to the Pension and Welfare Benefits Administration (PWBA), Office of Exemption Determinations, Room N–5649, U.S. Department of Labor, 200 Constitution Avenue, NW., Washington, DC 20210. Attention: Application No. _____, stated in each Notice of Proposed Exemption. Interested persons are also invited to submit comments and/or hearing requests to PWBA via e-mail or FAX. Any such comments or requests should be sent either by e-mail to: *moffittb@pwba.dol.gov,* or by FAX to (202) 219–0204 by the end of the scheduled comment period. The applications for exemption and the comments received will be available for public inspection in the Public Documents Room of the Pension and Welfare Benefits Administration, U.S. Department of Labor, Room N–1513, 200 Constitution Avenue, NW., Washington, DC 20210.

Notice to Interested Persons

Notice of the proposed exemptions will be provided to all interested persons in the manner agreed upon by the applicant and the Department within 15 days of the date of publication in the **Federal Register**. Such notice shall include a copy of the notice of proposed exemption as published in the **Federal Register** and shall inform interested persons of their right to comment and to request a hearing (where appropriate).

SUPPLEMENTARY INFORMATION: The proposed exemptions were requested in applications filed pursuant to section 408(a) of the Act and/or section 4975(c)(2) of the Code, and in accordance with procedures set forth in 29 CFR part 2570, subpart B (55 FR 32836, 32847, August 10, 1990). Effective December 31, 1978, section 102 of Reorganization Plan No. 4 of 1978, 5 U.S.C. App. 1 (1996), transferred the authority of the Secretary of the Treasury to issue exemptions of the type requested to the Secretary of Labor. Therefore, these notices of proposed exemption are issued solely by the Department.

The applications contain representations with regard to the proposed exemptions which are summarized below. Interested persons are referred to the applications on file with the Department for a complete statement of the facts and representations.

Rockford Corporation 401(k) Retirement Savings Plan (the Plan) Located in Tempe, AZ

[Application No. D–10852]

Proposed Exemption

The Department is considering granting an exemption under the authority of section 408(a) of the Act (or ERISA) and section 4975(c)(2) of the Code and in accordance with the procedures set forth in 29 CFR Part 2570, Subpart B (55 FR 32836, 32847, August 10, 1990).[1] If the exemption is granted, the restrictions of sections 406(a)(1)(D), 406(b)(1) and (b)(2) of the Act and the sanctions resulting from the application of section 4975 of the Code, by reason of section 4975(c)(1)(D) and (E) of the Code, shall not apply, effective December 30, 1999 until March 15, 2000, to an arrangement, by Rockford Corporation (Rockford), the Plan sponsor, for the reversal of the original purchase of debt securities (the Debentures) previously issued by Rockford (the Reversal Transactions), involving the following transactions affecting the individually-directed accounts in the Plan (the Plan Accounts) of certain Plan participants (the Participants): (1) The purchase, by the Participants, from their Plan Accounts of the Debentures; (2) the distribution in kind of the Debentures by the Plan Accounts to the Participants; (3) the rollover of the Debentures, if distributed in kind to the Participants, into self-directed individual retirement accounts (the IRAs) established by the Participants; and (4) any benefit that may have inured to Rockford by not having to repurchase the Debentures held by the Plan Accounts.

This proposed exemption is subject to the following conditions:

(a) A Form 5330 was filed by Rockford with the Internal Revenue Service (the Service) and all appropriate excise taxes were paid with respect to the Plan's acquisition and holding of the Debentures, as well as for the extension of credit by the Plan to Rockford resulting therefrom.

(b) With respect to each Debenture,

(1) Rockford offered to repurchase such Debentures from each affected Participant's account in the Plan (the Plan Account), at their fair market value, as determined by Arthur Andersen LLP (Arthur Andersen), a qualified, independent appraiser; and

(2) By March 15, 2000 each Debenture was either—(i) repurchased by Rockford; (ii) purchased by or distributed in kind to each Participant whose Plan Account had held such Debentures; and (iii) rolled over, at the election of the Participant, into the Participant's self-directed IRA.

(c) At the time of the Reversal Transactions, each Plan Account received no less than fair market value for the Debentures, which was in excess of their initial cost.

(d) The Plan Accounts paid no fees or commissions in connection with the Reversal Transactions.

(e) Rockford advised each affected Participant in advance of any transaction of the various options available with respect to the divestment of the Debentures from the Participant's Plan Account.

(f) Rockford has maintained, or will cause to be maintained, for a period of six years from the date of such transactions, in a manner capable for audit and examination, such records as are necessary to enable the persons described below in paragraph (g) to determine whether the conditions of this exemption have been met, except that a prohibited transaction will not be considered to have occurred if, due to circumstances beyond the control of Rockford, the records are destroyed prior to the end of the six year period.

(g)(1) Except as provided in paragraph (2) of this section (g) and notwithstanding any provisions of subsections (a)(2) and (b) of section 504 of the Act, the records referred to in paragraph (f) are unconditionally available at their customary location for examination during normal business hours by—

(A) Any duly authorized employee or representative of the Department or the Service;

(B) Any fiduciary of the Plan or any duly authorized employee or representative of such fiduciary; and

(C) Any Participant or beneficiary or duly authorized employee or representative of such Participant or beneficiary.

(g)(2) None of the persons described in subparagraphs (g)(1)(B)–(g)(1)(C) shall be authorized to examine the trade secrets of Rockford or commercial or financial information which is privileged or confidential.

Effective Date: If granted, this proposed exemption will be effective between December 30, 1999 and March 15, 2000.

Summary of Facts and Representations

1. The Plan is a self-directed individual account plan intended to meet the requirements under section 404(c) of the Act. As of February 28, 2001, the Plan had 365 participants who exercised investment discretion over their Plan Accounts and total assets of $5,895,662.

2. The Plan is sponsored by Rockford, a designer, manufacturer and distributor of high performance car audio systems. Rockford is incorporated in the State of Arizona and it maintains its principal place of business at 648 S. River Road, Tempe, Arizona. As of December 31, 2000, Rockford had total assets of $66.9 million and shareholders' equity of $46.3 million.

3. On May 1, 1995, Rockford issued a class of convertible subordinated debentures (*i.e.,* the Debentures) worth $1 million to its shareholders which included certain Participants who were also senior employees and officers of Rockford.[2] The Debentures have a maturity date of May 1, 2002 and provide for quarterly payments of interest, at the annualized rate of 8.5 percent. At maturity, the Debentures require a full return of principal. The Debentures are also convertible into common stock at any time before their redemption or maturity at a face value of $10.50 per share.

4. The Participants were free to acquire the Debentures with their personal funds, other savings, or the balances in their Plan Accounts. However, because these Participants did not have sufficient funds to purchase the securities in their personal capacity, they suggested that Rockford amend the Plan's investment options to permit

[1] For purposes of this proposed exemption, references to provisions of Title I of the Act, unless otherwise specified, refer also to the corresponding provisions of the Code.

[2] Because of the requirements of the securities laws, the Debentures could only be offered to Rockford's current shareholders or option holders.

such investments by certain Plan Accounts. Therefore, Rockford amended the Plan and only 20 Participants acquired the Debentures for their respective Plan Accounts. It is represented that the acquisition of the Debentures by each Plan Account was based on the exercise of control by the Participant who directed such purchase and was not motivated or influenced by Rockford.

The Debentures were issued in amounts based upon the original principal amounts invested. There was no minimum amount required in connection with such purchases. As noted in the following table, some Participants invested over 25 percent of the assets in their Plan Accounts in the Debentures.[3]

Participant	Plan account balance or employee rollover	Purchase price paid for debentures or face value	Percent of vested balance
R. Trout	$41,668.65	$10,000.00	24
A. Zimmerman	58,984.16	15,755.00	27
G. Church	12,936.47	3,521.00	27
T. Coulson	23,095.67	704.00	3
H. Kane	17,402.39	3,521.00	20
W. Turner	50,301.94	3,521.00	7
A. Gitch	21,441.30	11,056.00	52
H. Parvin (Chris)	36,896.55	5,000.00	14
J. Harris II (Wayne)	53,251.36	39,500.00	74
M. Williams	12,408.85	704.00	6
R. Gentry	14,048.23	1,760.00	13
M. Lowe	8,342.00	2,112.00	25
M. Rudolph	2,589.73	1,300.00	50
L. Ferris	9,975.33	5,000.00	50
M. Albers	40,300.31	3,520.00	9
J. Thompson; Rollover	50,000.00	50,000.00	100
D. Hammerle	5,338.90	1,789.00	34
D. Boshes	13,326.13	7,042.00	53
D. Boshes; Rollover	13,000.00	13,000.00	100
V. Hodson	114.88	114.00	99
D. Richards	7,580.02	4,250.00	56

In the aggregate, the Plan Accounts purchased approximately 18 percent (or $183,169.54) of the $1 million issue while Rockford's other shareholders purchased the remaining 82 percent of the Debentures. The Plan Accounts paid no fees or commissions to Rockford in connection with such acquisitions.

5. During the course of a routine audit of the Plan in March 1999, Ernst & Young, LLP (Ernst & Young), the Plan's accountants, questioned whether the Debentures constituted ''qualifying employer securities'' within the meaning of section 407(d)(5) of the Act.[4] Based upon a variety of legal advice, Rockford considered this question and subsequently determined that the Debentures failed to meet the requirements of section 407(e)(2)(B) of the Act because 50 percent of the Debentures were not held by persons which were independent of Rockford.[5] Therefore, Rockford filed a Form 5330 with the Service on April 7, 2000 and paid excise taxes on July 6, 2000 to cover the prohibited transactions arising from the acquisition and holding of the Debentures by the Plan Accounts, as well as in connection with prohibited extensions of credit by the Plan Accounts to Rockford.

6. It is represented that the Debentures were never in default or delinquency and they appreciated significantly in value following their acquisition by the Plan Accounts. Between May 1, 1995 and March 15, 2000, the Participants earned interest payments as follows with respect to the Debentures:

[3] The Department is not providing retroactive exemptive relief with respect to the original acquisition of the Debentures by the Plan Accounts. As stated later in this proposal, Rockford has already paid excise taxes to the Service with respect to prohibited transactions arising in connection with the original acquisition and holding of the Debentures by the Plan Accounts, including prohibited extensions of credit by the Plan Accounts to Rockford.

[4] Section 407(d)(5)(B) of the Act states that the term ''qualifying employer security'' means an employer security which is a marketable obligation (as defined in section 407(e) of the Act). Section 407(e) of the Act states that, for purposes of section 407(d)(5) of the Act, the term ''marketable obligation'' means a bond, debenture, note, or certificate, or other evidence of indebtedness if—

(1) such obligation is acquired—

(A) on the market, either (i) at the price of the obligation prevailing on a national securities exchange which is registered with the Securities and Exchange Commission, or (ii) if the obligation is not traded on such national securities exchange, at a price not less favorable to the plan than the offering price for the obligation as established by the current bid and asked prices quoted by persons independent of the issuer;

(B) from an underwriter, at a price (i) not in excess of the public offering price for the obligation as set forth in a prospectus or offering circular filed with the Securities and Exchange Commission, and (ii) at which a substantial portion of the same issue is acquired by persons independent of the issuer; or

(C) directly from the issuer, at a price not less favorable to the plan than the price paid currently for a substantial portion of the same issue by persons independent of the issuer;

(2) immediately following acquisition of such obligation—

(A) not more than 25 percent of the aggregate amount of obligations issued in such issue and outstanding at the time of acquisition is held by the plan, and

(B) at least 50 percent of the aggregate amount referred to in subparagraph (A) is held by persons independent of the issuer; and

(3) immediately following acquisition of the obligation, not more than 25 percent of the assets of the plan is invested in obligations of the employer or an affiliate of the employer.

[5] According to the exemption application, the purchase of the Debentures was noted in the 1995 financial statements without comment. In the 1996 financial statements, Ernst & Young reportedly questioned whether the Debentures had been offered to a nondiscriminatory group, as required under Code qualification rules. The comment was repeated in the 1997 and 1998 financial statements. In March 1999, Ernst & Young decided to review various regulatory issues related to the Debentures and retained legal counsel for consultation on the discrimination issue and qualifying employer securities matter. However, these issues were resolved with the Service in a closing agreement dated July 19, 2001.

Participant	2d Q '95 (in $s)	3d Q '95—4th Q '99 (in $s)	1st Q '00	Total interest (in $s)
R. Trout	141.67	3,825.00	223.20	3,966.67
A. Zimmerman	223.20	6,026.22	31.59	6,472.62
G. Church	49.88	1,346.76	4.32	1,428.23
T. Coulson	9.97	269.28	31.59	298.53
H. Kane	49.88	1,346.76	.....	1,428.23
W. Turner	49.88	1,346.76	62.53	1,396.64
A. Gitch	156.63	4,228.92	106.25	4,447.90
H. Parvin (Chris)	70.83	1,912.50	.....	2,089.58
J. Harris II (Wayne)	559.58	15,108.84	2.16	15,668.42
M. Williams	9.97	269.28	5.40	281.41
R. Gentry	24.93	673.20	6.48	703.53
M. Lowe	29.92	807.84	7.98	844.24
M. Rudolph	18.42	497.34	.....	523.74
L. Ferris	70.83	1,912.50	.....	1,983.33
M. Albers	49.87	1,346.40	.....	1,396.27
J. Thompson; Rollover	.....	19,125.00	10.98	19,125.00
D. Hammerle	25.35	684.36	.....	720.69
D. Boshes	99.76	4,972.50	.....	5,072.26
D. Boshes; Rollover	.....	2,603.52	.....	2,603.52
V. Hodson	1.62	43.56	.....	45.18
D. Richards	60.21	1,625.76	.....	1,685.97

[1] Figures are approximate.

In addition, an annual fee of $1,000 was either paid by Rockford or the Plan's forfeiture account to The Principal Financial Group, the Plan administrator and recordkeeper, as well as an unrelated party, in connection with the holding of the Debentures by the Plan Accounts.

7. The Debentures were valued on December 16, 1999 by Messrs. James C. Gari, CFA, Manager, Financial Valuation, and Andrew W. Fernandez, Consultant, Financial Valuation, both of whom are employed by the Chicago, Illinois office of Arthur Andersen, which was retained by Rockford as a qualified, independent appraiser. The fees received by Arthur Andersen in connection with the appraisal were paid by Rockford and they represented less than one percent of Arthur Andersen's annual gross income.

In their appraisal report, the appraisers treated the Debentures as a minority interest in the common stock of Rockford because the convertibility feature of the Debentures would permit their conversion into a total of 94,742 shares [6] of common stock (of which 17,435 shares of common stock were allocated to the Plan Accounts), at any time before redemption or maturity. The value of the common stock had increased significantly in value, thus, resulting in a substantial appreciation in the value of the Debentures. Thus, utilizing the Income Approach's discounted cash flow analysis to valuation, the appraisers placed the fair market value of the stock at $20.50 per share, as of November 1, 1999.

Based on the Arthur Andersen appraisal, the total fair market value of the minority interest relating to all of the Debentures was $1,942,211. Of this amount, $357,417.50 was attributed to the Debentures held by the Plan Accounts which can be broken down as follows for each affected Participant:

Participant	Face value	Fair market value	Number of shares
R. Trout	$10,000.00	$19,516.00	952
A. Zimmerman	15,755.00	30,750.00	1,500
G. Church	3,521.00	6,867.00	335
T. Coulson	704.00	1,373.50	67
H. Kane	3,521.00	6,867.50	335
W. Turner	3,521.00	6,867.50	335
A. Gitch	11,056.00	21,566.00	1,052
H. Parvin (Chris)	5,000.00	9,758.00	476
J. Harris II (Wayne)	39,500.00	77,100.50	3,761
M. Williams	704.00	1,373.50	67
R. Gentry	1,760.00	3,423.50	167
M. Lowe	2,112.00	4,120.50	201
M. Rudolph	1,300.00	2,521.50	123
L. Ferris	5,000.00	9,758.00	476
M. Albers	3,520.00	6,867.50	335
J. Thompson; Rollover	50,000.00	97,600.50	4,761
D. Hammerle	1,789.15	3,485.00	170
D. Boshes	7,042.00	13,735.00	670
D. Boshes; Rollover	13,000.00	25,379.00	1,238
V. Hodson	114.00	205.00	10

[6] The 94,742 shares of common stock representing the Debentures constituted 2 percent of Rockford's common stock.

Participant	Face value	Fair market value	Number of shares
D. Richards	4,250.39	8,282.00	404
Totals	183,169.54	357,417.50	17,435

8. Rockford believed that Participants whose Plan Accounts were invested in the Debentures could consider themselves to be adversely affected if the transaction were reversed by Rockford's repurchase of the Debentures. This was because the Participants would lose the future potential increase in value that they had hoped to realize by reason of such investment. Therefore, Rockford advised each Participant, whose Plan Account had been invested in the Debentures, that he or she could elect to (a) have Rockford purchase the Debentures from their respective Plan Account, at fair market value, as determined by a qualified, independent appraiser; (b) purchase the Debentures from his or her respective Plan Account at fair market value or receive an in kind distribution of the Debentures from the Participant's Plan Account; or (c) rollover the Debentures at their fair market value into the Participant's self-directed IRA, if the distribution was in kind. The Participants were further advised that although the choice of alternatives was entirely up to them, the Debentures could not remain in the Plan.[7]

To facilitate a Participant's purchase of Debentures from his or her Plan Account, Rockford also offered to make market rate loans to the Participants. However, no Participants took advantage of Rockford's offer.

For purposes of repurchasing the Debentures, Rockford and the Participants relied upon the Arthur Andersen appraisal to determine fair market value. Thus, between December 30, 1999 and March 15, 2000, the Debentures held by the Plan Accounts were either (a) repurchased by Rockford; (b) purchased by the Participant or distributed in kind to the Participant; or

(c) rolled over, at the election of such Participant, into a self-directed IRA, if the distribution was in kind. The transactions can be summarized as follows:

Participant	Face value	Fair market value	Disposition
R. Trout	$10,000.00	$19,516.00	Rollover [1].
A. Zimmerman	15,755.00	30,750.00	Rollover.
G. Church	3,521.00	6,867.00	Rep. Rockford.[2]
T. Coulson	704.00	1,373.50	Rep. Rockford.
H. Kane	3,521.00	6,867.50	Rep. Rockford.
W. Turner	3,521.00	6,867.50	Rep. Rockford.
A. Gitch	11,056.00	21,566.00	Rep. Rockford.
H. Parvin (Chris)	5,000.00	9,758.00	Rollover.[2]
J. Harris II (Wayne)	39,500.00	77,100.50	Roll/Rep. Part.[3]
M. Williams	704.00	1,373.50	Rep. Rockford.
R. Gentry	1,760.00	3,423.50	Rep. Rockford.
M. Lowe	2,112.00	4,120.50	Rep. Rockford.
M. Rudolph	1,300.00	2,521.50	Rep. Rockford.
L. Ferris	5,000.00	9,758.00	Rollover.
M. Albers	3,520.00	6,867.50	Rollover.
J. Thompson Rollover	50,000.00	97,600.50	Rollover.
D. Hammerle	1,789.15	3,485.00	Rep. Rockford.
D. Boshes	7,042.00	13,735.00	Rollover.
D. Boshes Rollover	13,000.00	25,379.00	Rollover.
V. Hodson	114.00	205.00	Rollover.
D. Richards	4,250.39	8,282.00	Rollover.
Total	183,169.54	357,417.50	

[1] Rollovers include distributions in kind.
[2] Repurchased by Rockford.
[3] Rollover/Repurchased by Participant.

The Plan Accounts paid no fees or commissions in connection with the Reversal Transactions.

9. Rockford believes that its repurchase of the Debentures from the Plan Accounts can be viewed as a ''correction'' of a prior prohibited transaction under section 4975 of the Code.[8] Rockford has, however, requested an administrative exemption from the Department with respect to its arrangement whereby Participants were permitted to (a) purchase the Debentures directly from their Plan Accounts, (b) receive distributions in kind of such Debentures from their Plan Accounts, or (c) roll over such Debentures into self-directed IRAs, if the distribution was in kind. Rockford states that exemptive relief is required to the extent the initial acquisition and

[7] It is represented that the sale of the Debentures to Rockford would not raise any tax issues for the Participants inasmuch as the transaction was simply the reversal of a prior prohibited transaction. It is also represented that the distribution option offered to Participants would pose income tax consequences while the rollover option would not.

[8] In this regard, the Department has no jurisdiction with respect to the meaning of ''correction'' under section 53.4941(e)–1(c)(1) of the Foundation Excise Tax Regulations, which applies to prohibited transactions under section 4975 of the Code by reason of Temporary Pension Excise Tax Regulation 141.4975–13. Under section 53.4941(e)–1(c)(1), any correction pursuant to section 4941 of the Code is not a prohibited act of self-dealing. Therefore, the Department expresses no opinion herein on whether the repurchase of the Debentures by Rockford from the affected Plan Accounts was a correction within the meaning of 53.4941(e)–1(c)(1).

holding of the Debentures by the Plan Accounts (including the extension of credit transaction) were not ''corrected,'' within the meaning of section 4975 of the Code, by the subsequent Participant actions. Additionally, exemptive relief is required to the extent Rockford received a benefit by not having to repurchase any of the Debentures held by the Plan Accounts.

10. To document each Reversal Transaction, Rockford is maintaining for a period of six years from the date of such transaction, records that will enable certain persons, such as employees of the Department or the Service, Plan fiduciaries, Participants or their beneficiaries, to determine whether the conditions of the exemption have been met. Such records are being made available at their customary location for examination during normal business hours.

11. In summary, it is represented that the arrangement satisfied the statutory criteria for an exemption under section 408(a) of the Act because:

(a) Rockford filed a Form 5330 with the Service and paid appropriate excise taxes that were due with respect to the transactions arising during the Plan's ownership of the Debentures;

(b) Rockford offered to repurchase the Debentures from each affected Participant's Plan Account, and by March 15, 2000, each Debenture was either (i) repurchased by Rockford; (ii) purchased by a Participant whose Plan Account had been invested in the Debentures, or (iii) distributed in kind to a Participant whose Plan Account had held the Debentures; or (iii) rolled over, at the election of the Participant into a self-directed IRA, if the distribution was in kind.

(c) Each Plan Account received fair market value for the Debentures, which was an amount in excess of their initial cost.

(d) The fair market value of the Debentures, which was equated to the value of a minority interest in Rockford common stock, was determined by Arthur Andersen, a qualified, independent appraiser.

(e) Rockford will maintain for a period of six years from the date of each Reversal Transaction, in a manner capable for audit and examination, records of the transaction in order that certain persons, such as employees of the Department or the Service, Plan fiduciaries, Participants or their beneficiaries, can determine that the conditions of the exemption have been met.

For Further Information Contact: Ms. Jan D. Broady, U.S. Department of Labor, (202) 219–8881. (This is not a toll-free number.)

Massachusetts Mutual Insurance Company (MassMutual) Located in Springfield, Massachusetts

[Application No. D–10869]

Proposed Exemption

The Department is considering the grant of the following exemption under the authority of section 408(a) of the Act and section 4975(c)(2) of the Code, and in accordance with the procedures set forth in 29 CFR Part 2570, Subpart B (55 FR 32836, 32847, August 10, 1990).

Section I. Retroactive Exemption for the Purchase of Fund Shares

For the period from April 1, 1995 until the date this proposed exemption is granted, the restrictions of sections 406(a) and 406(b) of the Act and the taxes imposed by section 4975 of the Code, by reason of section 4975(c)(1)(A) through (F) of the Code, shall not apply to the purchase by an employee benefit plan (the Client Plan) (directly or through a single customer or pooled separate account or other pooled vehicle) of shares of one or more diversified open-end management investment companies (Fund or Funds) in exchange for Client Plan assets transferred in-kind to a Fund from a single customer or pooled separate account or other pooled vehicle holding plan assets maintained by MassMutual (a Separate Account), where MassMutual or its affiliate is the Fund's investment adviser and a Client Plan fiduciary, provided the following conditions have been met: [9]

(a) No sales commissions, redemption fees, or other fees are paid by the Client Plan in connection with the purchase of Fund shares by a Client Plan.

(b) All transferred assets are either cash or securities for which market quotations are readily available.

(c) The assets transferred in-kind to the Funds constitute the Client Plan's pro rata portion of the assets held by the Separate Account immediately prior to the transfer.

(d) The Client Plan receives Fund shares having a total net asset value equal to the value of the assets transferred by the Client Plan on the date of the transfer, as determined in a single valuation performed in the same manner at the close of the same business day with respect to all Client Plans participating in the transaction on such date, in accordance with the procedures set forth in Rule 17a–7 of the Investment Company Act of 1940 (the 1940 Act) (using sources independent of MassMutual and the Fund) and the procedures established by the Funds pursuant to Rule 17a–7 for the valuation of such assets.

(e) An Independent Fiduciary with respect to each Client Plan receives advance written notice of an in-kind transfer and purchase of assets and full written disclosure of information concerning the Funds, including:

(1) A current prospectus for each Fund to which the Separate Account's assets may be transferred, updated as necessary;

(2) A statement describing the investment advisory and other fees to be charged to, or paid by, a Client Plan and the Funds to the Fund Adviser, including the nature and extent of any differential between the rates of the fees paid by the Fund and the rates of the fees paid by the Client Plan in connection with the Client Plan's investment in the Separate Account;

(3) A statement of the reasons why MassMutual considers such investment to be appropriate for the Client Plan; and

(4) A statement describing whether there are any limitations applicable to MassMutual with respect to which Client Plan assets may be invested in Fund shares, including the nature of the limitations.

(f) The Independent Fiduciary may: (1) Opt-out of the in-kind transfer of the Client Plan's interest in the Separate Account for shares of the Funds (including by selling its interest in a pooled vehicle) without penalty; or (2) approve the in-kind transfer (on the basis of the prospectus and disclosure referred to in paragraph (e) of this Section) consistent with the responsibilities, obligations, and duties imposed on fiduciaries by Part 4 of Title I of the Act. Approval for the in-kind transfer of a Client Plan's interest in the Separate Account in exchange for Fund shares may be presumed notwithstanding that MassMutual does not receive any response from a Client Plan pursuant to MassMutual's two written requests (one by certified mail) for such approval, provided that the first such request occurs at least 90 days before the in-kind transfer and the second such request occurs within 45 days thereafter.

(g) MassMutual sends a written confirmation by regular mail or personal delivery to the Independent Fiduciary of

[9] The Department notes that the proposed exemption would not provide relief for any prohibited transactions that may arise in connection with terminating a separate investment account, or permitting certain plans to withdraw from a separate investment account that is not terminating, or liquidating or transferring any plan assets held by the separate investment account.

each Client Plan participating in the in-kind transfer, no later than 105 days after completion of each purchase, containing:

(1) The number of Separate Account units held by the Client Plan immediately before the transfer, and the related per unit value and the total dollar amount of such units; and

(2) The number of Fund shares held by the separate account immediately following the transfer, and the related per share net asset value and the total dollar amount of such shares.

(h) All other dealings between the Client Plan and the Funds are on a basis no less favorable to the Client Plan than dealings between the Funds and other shareholders holding the same class of shares as the Client Plans.

(i) Conditions (a) and (f) of Section III have been met.

Section II. Prospective Exemption for the Purchase of Fund Shares

If this proposed exemption is granted, the restrictions of sections 406(a) and 406(b) of the Act and the taxes imposed by section 4975 of the Code, by reason of section 4975(c)(1) (A) through (F) of the Code, shall not apply to the purchase by a Client Plan (directly or through a single customer or pooled separate account or other pooled vehicle) of shares of one or more Fund(s) in exchange for Client Plan assets transferred in-kind to a Fund from a Separate Account, where MassMutual or its affiliate is the Fund's investment adviser and a Client Plan fiduciary, provided that the following conditions are met:

(a) The assets transferred in-kind to the Funds constitute the Client Plan's pro rata portion of the assets held by the Separate Account immediately prior to the transfer. Notwithstanding the foregoing, the allocation among Client Plans of fixed-income securities held by a Separate Account on the basis of each Client Plan's pro rata share of the aggregate value of such securities will not fail to meet the requirements of this subsection if:

(1) The aggregate value of the fixed-income securities does not exceed one percent of the total value of the assets held by the Separate Account immediately prior to the transfer; and

(2) Such securities have the same coupon rate and maturity, and at the time of the transfer, the same credit ratings from nationally recognized statistical rating agencies.

(b) An Independent Fiduciary with respect to each Client Plan receives advance written notice of the in-kind transfer and purchase and full written disclosure of information concerning the Funds including:

(1) The identity of the securities that will be valued in accordance with Rule 17a–7(b)(4) under the 1940 Act;

(2) The identity of any fixed-income securities allocated on the basis of each Client Plan's pro rata share of the aggregate value of such securities pursuant to Section II (a);

(3) Upon request of the Independent Fiduciary, a copy of the proposed exemption and/or a copy of the final exemption, once such documents are published in the **Federal Register**; and

(4) The date on which the in-kind purchase will take place.

(c) MassMutual sends by regular mail or personal delivery to the Independent Fiduciary of each Client Plan that purchases Fund shares pursuant to the in-kind transfer:

(1) not later than 30 days after the completion of the purchase, a written confirmation containing:

(A) The identity of each security valued in accordance with Rule 17a–7(b)(4) under the 1940 Act;

(B) The current market price, as of the date of the in-kind transfer, of each such security involved in the purchase of Fund shares; and

(C) The identity of each pricing service or market-maker consulted in determining the current market price of such securities; and

(2) not later than 90 days after each in-kind transfer, a written confirmation which contains:

(A) the number of Separate Account units held by such affected Client Plan immediately before the in-kind transfer (and the related per unit value and the aggregate dollar value of the units transferred); and

(B) the number of shares in the Funds that are held by such affected Client Plan following the in-kind transfer (and the related per share net asset value and the aggregate dollar value of the shares received).

(d)(1) MassMutual provides the Independent Fiduciary of each Client Plan holding shares of the Funds with—

(A) A copy of an updated prospectus of such Fund, at least annually; and

(B) Upon request of the Independent Fiduciary, a report or statement (which may take the form of the most recent financial report, the current statement of additional information, or some other written statement) containing a description of all fees paid by the Fund to MassMutual or its affiliates.

(2) With respect to each of the Funds in which a Client Plan invests, in the event such Fund places brokerage transactions with an affiliate of MassMutual, MassMutual will provide the Independent Fiduciary of such Client Plan at least annually with a statement specifying:

(A) The total, expressed in dollars, of brokerage commissions of each Fund's investment portfolio that are paid to an affiliate of MassMutual by such Fund;

(B) The total, expressed in dollars, of brokerage commissions of each Fund's investment portfolio that are paid by such Fund to brokerage firms unrelated to MassMutual;

(C) The average brokerage commissions per share, expressed as cents per share, paid to an affiliate of MassMutual by each portfolio of a Fund; and

(D) The average brokerage commissions per share, expressed as cents per share, paid by each portfolio of a Fund to brokerage firms unrelated to MassMutual.

(e) The Independent Fiduciary may: (1) opt-out (including by selling its interest in a pooled vehicle) of the in-kind exchange of the Client Plan's interest in the Separate Account for shares of the Funds without penalty; or (2) approve the in-kind transfer (on the basis of the prospectus and disclosure referred to in paragraph (b) of this Section and paragraph (e) of Section I) consistent with the responsibilities, obligations, and duties imposed on fiduciaries by Part 4 of Title I of the Act. Approval for the in-kind transfer of a Client Plan's interest in the Separate Account in exchange for Fund shares may be presumed notwithstanding that MassMutual does not receive any response from a Client Plan pursuant to MassMutual's two written requests (one by certified mail) for such approval, provided that the first such request occurs at least 90 days before the in-kind transfer and the second such request occurs within 45 days thereafter.

(f) All of a Client Plan's assets held in a Separate Account (other than Fund shares already held in the Account) are transferred in-kind to one or more of the Funds in exchange for Fund shares, except that any Plan assets in the Separate Account which are not suitable for acquisition by the Funds shall be liquidated as soon a reasonably practicable, and the cash proceeds shall be invested directly in shares of the Funds.

(g) The authorization described in paragraph (e) of this section is terminable at will by the Independent Fiduciary of a Client Plan, without penalty to such Client Plan. Such termination will be effected by MassMutual redeeming the shares of the Fund(s) held by the affected Client Plan or selling its interest in a Separate Account, in one business day, provided

that if, due to circumstances beyond the control of MassMutual, the redemption cannot be executed within one business day, MassMutual shall have one additional business day to complete such redemption.

(h) Conditions (a), (b), (d), (e), and (h) of Section I, Conditions (a) and (e) of Section III, and Conditions (a) and (b) of Section V have been met.

Section III. Retroactive Exemption for the Receipt of Fees

For the period from April 1, 1995 until the date this proposed exemption is granted, the restrictions of sections 406(a) and 406(b) of the Act and the taxes imposed by section 4975 of the Code, by reason of section 4975(c)(1) (A) through (F) of the Code, shall not apply to the receipt of fees by MassMutual from the Funds for acting as an investment adviser for such Funds, as well as for providing other services to the Funds which are ''Secondary Services'', as defined in Section VI(i), in connection with the investment by the Client Plans for which MassMutual serves as a fiduciary in shares of the Funds, provided that the following conditions are met:

(a) As to each Client Plan, the combined total of all fees received by MassMutual for the provision of services to the Client Plan, and for the provision of services to a Fund in which a Client Plan holds shares, is not in excess of ''reasonable compensation'' within the meaning of section 408(b)(2) of the Act.

(b) The price paid or received by a Client Plan for shares in a Fund is the net asset value of such shares, as defined in Section VI(g), at the time of the transaction and is the same price that would have been paid or received for the shares by any other investor at that time.

(c) Neither MassMutual, other than in its capacity as agent for the Funds, nor any officer or director of MassMutual, purchases or sells shares of the Funds from or to any Client Plan.

(d) The Independent Fiduciary approves the fees to be paid by the Funds to MassMutual as such fees relate to:

(1) Fund shares purchased by a Client Plan for cash;

(2) Fund shares purchased by a Client Plan pursuant to an in-kind transfer (upon the Independent Fiduciary's consideration of the information described in paragraph (e) of Section I);

(3) the addition of a Secondary Service (as defined in Section V (i)) provided by MassMutual to the Fund for which a fee is charged, or an increase in the rate of any fee paid by the Funds to MassMutual for any Secondary Service that results either from an increase in the rate of such fee or from a decrease in the number or kind of services performed by MassMutual for such fee over an existing rate for such Secondary Service that had been authorized by the Independent Fiduciary of a Client Plan. The approvals required in this paragraph may be presumed notwithstanding that MassMutual does not receive any response from a Client Plan to MassMutual's two written requests (one by certified mail) for approval of a change in the rates of fees provided that the first such request occurs at least 90 days before the in-kind transfer and the second such request occurs within 45 days thereafter. Such approval may be limited solely to the investment advisory and other fees paid by the mutual fund in relation to the fees paid by a Client Plan and need not relate to any other aspects of such investment.

(e) The Fund Adviser does not receive any fees payable pursuant to Rule 12b–1 under the 1940 Act in connection with the acquisition of Fund shares in exchange for Client Plan assets.

(f) The Plan does not pay any plan-level investment management, investment advisory or similar fee with respect to the Client Plan assets invested in such shares for the entire period of such investment. This condition does not preclude the payment of investment advisory fees by an investment company under the terms of its investment advisory agreement adopted in accordance with section 15 of the Investment Company Act of 1940.

(g) On an annual basis, MassMutual provides the Independent Fiduciary of each Client Plan holding shares of the Funds with—

(1) A copy of an updated prospectus of such Fund; and

(2) Upon request of the Independent Fiduciary, a report or statement (which may take the form of the most recent financial report, the current statement of additional information, or some other written statement) containing a description of all fees paid by the Fund to MassMutual or its affiliates.

(3) Oral or written responses to inquiries of the Independent Fiduciary as they arise.

(h) Conditions (a), (e), (h) and (i) of section I, Condition (b) of Section II, and Conditions (a) and (b) of Section V have been met.

Section IV. Prospective Exemption for the Receipt of Fees

If this proposed exemption is granted, the restrictions of sections 406(a) and 406(b) of the Act and the taxes imposed by section 4975 of the Code, by reason of section 4975(c)(1) (A) through (F) of the Code, shall not apply to the receipt of fees by MassMutual from the Funds for acting as an investment adviser for such Funds, as well as for providing other services to the Funds which are ''Secondary Services,'' as defined in Section VI(i), in connection with the investment by the Client Plans for which MassMutual serves as a fiduciary in shares of the Funds, provided that the following conditions are met:

(a) For each Client Plan using the fee structure described in paragraph (d)(2) of this Section with respect to investments in a particular Fund, the Independent Fiduciary of the Client Plan receives full written disclosure in a Fund prospectus or otherwise of any increases in the rates of fees charged by MassMutual to the Funds for investment advisory services.

(b) All authorizations made by an Independent Fiduciary regarding investments in a Fund and the fees paid to MassMutual are subject to an annual reauthorization, wherein any such prior authorization referred to in Section III(d) shall be terminable at will by the Client Plan, without penalty to the Client Plan, upon receipt by MassMutual of written notice of termination. The Independent Fiduciary must be supplied with a Termination Form, at the times specified in paragraph (c) of this Section, with instructions on the use of the form, including the following information:

(1) The authorization is terminable at will by any of the Client Plans, without penalty to such Client Plans, upon receipt by MassMutual of written notice from the Independent Fiduciary; and

(2) Failure by the Independent Fiduciary to return the Termination Form on behalf of a Client Plan will be deemed to be an approval of the additional Secondary Service for which a fee is charged or increase in the rate of any fees, if such Termination Form is supplied pursuant to the requirements of this Section, and will result in the continuation of the authorizations of MassMutual to engage in the transactions on behalf of such Client Plan.

(c) The Independent Fiduciary is supplied with a Termination Form no less than annually; provided that the Termination Form need not be supplied to the Independent Fiduciary pursuant to this paragraph sooner than six months after such Termination Form is supplied pursuant to paragraph (e) below, except to the extent required to disclose an additional service or an increase in fees.

(d) Each Client Plan satisfies either (but not both) of the following:

(1) For a Client Plan for which MassMutual serves as a non-discretionary trustee, the Plan does not pay any Plan-level investment management fees, investment advisory fees, or similar fees to MassMutual with respect to Client Plan assets invested in shares of the Funds. This condition does not preclude the payment of investment advisory fees, or similar fees, by a Fund to MassMutual under the terms of its investment advisory agreement adopted in accordance with section 15 of the 1940 Act, nor does it preclude the payment of fees for Secondary Services to MassMutual pursuant to a duly adopted agreement between MassMutual and the Funds.

(2) For a Client Plan for which MassMutual serves as a discretionary fiduciary (*i.e.,* a trustee or investment manager), such Client Plan pays MassMutual an investment advisory fee based on total Client Plan assets from which a credit had been subtracted representing such Client Plan's *pro rata* share of all investment advisory fees paid by the Funds. This condition does not preclude the payment of fees for Secondary Services to MassMutual pursuant to a duly adopted agreement between MassMutual and the Funds.

(e)(1) For each Client Plan using the fee structure described in paragraph (d)(1) of this Section with respect to investments in a particular Fund, an increase in the rate of fees paid by the Fund to MassMutual regarding any investment management services, investment advisory services, or similar services that MassMutual provides to the Fund over an existing rate for such services that had been authorized by an Independent Fiduciary in accordance with paragraph (d) of Section III; or

(2) For any Client Plan under this exemption, an addition of a Secondary Service (as defined in Section V (i)) provided by MassMutual to the Fund for which a fee is charged, or an increase in the rate of any fee paid by the Funds to MassMutual for any Secondary Service that results either from an increase in the rate of such fee or from a decrease in the number or kind of services performed by MassMutual for such fee over an existing rate for such Secondary Service that had been authorized by the Independent Fiduciary of a Client Plan in accordance with paragraph (d) of Section III—

MassMutual will, at least 30 days in advance of the implementation of such additional service for which a fee is charged or fee increase, provide a written notice (which may take the form of a proxy statement, letter, or similar communication that is separate from the prospectus of the Fund and which explains the nature and amount of the increase in fees) to the Independent Fiduciary of the Client Plan. Such notice shall be accompanied by a Termination Form with instructions as described above.

(f) Conditions (a), (e) and (h) of Section I, Conditions (b) and (d) of Section II, Conditions (a), (b), (c), (d), (e), and (g) of Section III, and Conditions (a) and (b) of Section V have been met.

Section V. General Conditions

(a) MassMutual maintains for a period of six years the records necessary to enable the persons described in paragraph (b) of this section to determine whether the conditions of this exemption, and the proper crediting of fees described in paragraph (d)(2) of Section IV, have been met, except that:

(1) a prohibited transaction will not be deemed to have occurred if, due to circumstances beyond the control of MassMutual, the records are lost or destroyed prior to the end of the six-year period; and

(2) no party in interest other than MassMutual shall be subject to the civil penalty that may be assessed under section 502(i) of the Act, or to the taxes imposed by section 4975(a) and (b) of the Code, if the records are not maintained or are not available for examination as required by paragraph (b) below.

(b)(1) Except as provided in paragraph (b)(2) below and notwithstanding any provisions of section 504(a)(2) of the Act, the records referred to in paragraph (a) in this section are unconditionally available at their customary location for examination during normal business hours by—

(i) Any duly authorized employee or representative of the Department, the Internal Revenue Service, or the Securities and Exchange Commission,

(ii) Any fiduciary of the Client Plans who has authority to acquire or dispose of shares of the Funds owned by the Client Plans, or any duly authorized employee or representative of such fiduciary, and

(iii) Any participant or beneficiary of the Client Plans or duly authorized employee or representative of such participant or beneficiary;

(2) None of the persons described in paragraph (b)(1)(ii) and (iii) above shall be authorized to examine trade secrets of MassMutual, or commercial or financial information that is privileged or confidential.

Section VI. Definitions

For purposes of this proposed exemption:

(a) An ''affiliate'' of a person includes—

(1) Any person directly or indirectly through one or more intermediaries, controlling, controlled by, or under common control with the person.

(2) Any officer, director, employee or relative of such person, or partner in any such person; and

(3) Any corporation or partnership of which such person is an officer, director, partner or employee.

(b) The term ''Client Plan'' means a pension plan described in 29 CFR 2510.3–2, a welfare benefit plan described in 29 CFR 2510.3–1, and a plan described in section 4975(e)(1) of the Code.

(c) The term ''control'' means the power to exercise a controlling influence over the management or policies of a person other than an individual.

(d) The term ''fixed income security'' means any interest-bearing or discounted government or corporate debt security with a face amount of $1,000 or more that obligates the issuer to pay the holder a specified sum of money, and to repay the principal amount of the loan at maturity.

(e) The term ''Fund'' or ''Funds'' means any diversified open-end management investment company or companies registered under the Adviser's Act for which MassMutual or its affiliates serves as an investment adviser, and may also serve as a custodian, shareholder servicing agent, transfer agent or provide some other secondary service (as defined in paragraph (j) of this section).

(f)(1) The term ''Independent Fiduciary'' means a fiduciary of a Client Plan who is unrelated to, and independent of, MassMutual. For purposes of this exemption, a Client Plan fiduciary will be deemed to be unrelated to, and independent of, MassMutual if such fiduciary represents that neither such fiduciary, nor any individual responsible for the decision to authorize or terminate authorization for transactions described in Section I, II, III, or IV is an officer, director, or highly compensated employee (within the meaning of section 4975(e)(2)(H) of the Code) of MassMutual and represents that such fiduciary shall advise MassMutual if those facts change.

(2) Notwithstanding anything to the contrary in this Section VI(f), a fiduciary is not independent if:

(i) such fiduciary directly or indirectly controls, is controlled by, or

is under common control with the Insurer;

(ii) such fiduciary directly or indirectly receives any compensation or other consideration from MassMutual for his or her own personal account in connection with any transaction described in this exemption;

(iii) any officer, director, or highly compensated employee (within the meaning of section 4975(e)(2)(H) of the Code) of MassMutual, responsible for the transactions described in Section I, II, III or IV is an officer, director, or highly compensated employee (within the meaning of section 4975(e)(2)(H) of the Code) of the Client Plan sponsor or of the fiduciary responsible for the decision to authorize or terminate authorization for transactions described in Section I, II, III or IV. However, if such individual is a director of MassMutual or of the responsible fiduciary and if he or she abstains from participation in the decision to authorize or terminate authorization for transactions described in Section I, II, III or IV, then Section VI(f)(2)(iii) shall not apply.

(g) The term ''Net Asset Value'' means the amount calculated by dividing the value of all securities, determined by a method as set forth in a Fund's prospectus and Statement of Additional Information, and other assets belonging to each of the portfolios in such Fund, less the liabilities chargeable to each portfolio, by the number of outstanding shares.

(h) The term ''pooled separate account'' means a pooled investment fund maintained by MassMutual or an affiliate for the collective investment of assets attributable to two or more plans maintained by unrelated employers.

(i) The term ''secondary service'' means a service provided by massMutual or an affiliate to a Fund other than investment management, investment advisory or similar services.

(j) The term ''security'' shall be defined by section 2(36) of the Adviser's Act, as amended, 15 U.S.C. 80a–2(36) (1996).

(k) The term ''Fund Adviser'' means (i) any affiliate of MassMutual which serves as an investment adviser to a Fund, and (ii) any affiliate of an investment adviser identified in subsection (i).

(l) The term ''Termination Form'' means the form supplied to the Independent Fiduciary, at the times specified above, which expressly provides an election to the Independent Fiduciary to terminate on behalf of the Client Plans the authorizations described in Paragraph (b) of Section IV. Such Termination Form may be used at will by the Independent Fiduciary to terminate such authorization without penalty to the Client Plans and to notify MassMutual in writing to effect such termination by redeeming the shares of the Fund held by the Client Plans requesting termination by the close of the business day following the date of receipt by MassMutual, whether by mail, hand delivery, facsimile or other available means at the option of the Independent Fiduciary, of written notice of such request for termination; provided that if, due to circumstances beyond the control of MassMutual, the redemption cannot be executed within one business day, MassMutual shall have one additional business day to complete such redemption.

Summary of the Facts and Representations

1. The applicant is MassMutual, a mutual life insurance company organized in 1851. MassMutual, either directly or through its affiliates, offers, among other things, asset accumulation products, employee benefit services, and investment management services. MassMutual is registered under the Investment Advisers Act of 1940, as amended (the Advisers Act) and is an adviser for certain mutual funds.

MassMutual maintains numerous separate investment accounts in which certain plan participants invest. These accounts are advised and/or subadvised by MassMutual, or by a MassMutual affiliate such as OppenheimerFunds, Inc., HarbourView Asset Management Corporation, Trinity Investment Management Corporation, and David L. Babson and Company. MassMutual represents that, while its separate investment accounts purchase portfolio securities directly, most separate investment accounts also purchase mutual fund shares, including shares of Funds advised by non-affiliated third party managers. The applicant states that as the investment performances of the unaffiliated Funds change over time, MassMutual may desire to replace the manager of such a Fund. This involves, MassMutual states, selling shares of the unaffiliated Fund (and incurring certain transaction costs) and acquiring shares of a different Fund (and thus incurring additional transaction costs).

MassMutual represents that, in light of the above, it is more economical, more efficient, and less unwieldy to keep the assets of a separate investment account in proprietary Funds and, to the extent necessary, change the Funds' subadvisers. The preferable way to accomplish this, MassMutual states, is to: (1) Take a distribution of the unaffiliated Fund shares in-kind; (2) transfer the unaffiliated Fund shares to a proprietary Fund; and (3) either: (i) hire the prior adviser as a subadviser; (ii) hire a new adviser as the subadiviser; or (iii) manage the assets of the proprietary Fund through affiliates.[10] The applicant states that no brokerage commissions or other remuneration is charged to the Client Plans in connection with such an asset transfer as any such costs or expenses are paid by MassMutual.

2. The applicant therefore seeks an exemption to permit the in-kind transfer of the assets held by separate investment accounts maintained by MassMutual in exchange for shares of certain mutual funds for which MassMutual or its affiliates serves as an investment adviser or may provide some other secondary service. This involves, therefore, the in-kind transfer of portfolio securities (representing the Client Plans' interest in certain separate investment accounts) to the Funds in exchange for the transfer of shares of the Funds to the separate investment accounts.[11] The applicant also seeks relief for the receipt of fees by MassMutual for acting as an investment adviser for the Funds, and for providing certain ''secondary services'' to the Funds.[12]

MassMutual represents that the in-kind transfer transactions described herein are designed to comply with the Adviser's Act and Prohibited Transaction Exemption (PTE) 77–4 and PTE 97–41, as applicable.[13] MassMutual notes, however, that such transactions involve circumstances which differ slightly from those presented in either PTE 77–4 or PTE 97–41.[14] In this regard,

[10] The Department is expressing no opinion in this proposed exemption regarding the application of ERISA to the in-kind distribution of unaffiliated Fund shares.

[11] MassMutual represents that an in-kind transfer may involve, for example, a separate investment account's receipt of securities (pursuant to an in-kind distribution) from a mutual fund maintained by unaffiliated parties; followed by the transfer of such securities from the separate investment account to mutual funds advised by affiliates of MassMutual (an potentially subadvised by an unaffiliated investment adviser.

[12] The applicant represents that there will be no increase in fees paid by the Client Plans as a result of the in-kind transfer.

[13] MassMutual represents that while collective investment funds and other registered investment advisers have been granted exemptions to permit similar in-kind transfers, many insurance companies have relied on PTE 77–4 or other exemptions to convert separate investment accounts to mutual funds. In this regard, the Department is expressing no view as to the availability of this class exemption for the in-kind transfer of separate investment account assets in exchange for mutual fund shares.

[14] PTE 77–4, 42 FR 18732 (Apr. 8, 1977) permits the purchase or sale by a plan of shares of a registered investment company in situations where

the applicant points out that, for purposes of the exemption as proposed, approval of an in-kind transfer by an Independent Fiduciary may occur in writing and, additionally, approval may be in the form of ''negative consent''. Under the ''negative consent'' arrangement, approval for the in-kind transfer of a Client Plan's interest in the Separate Account will be presumed if MassMutual does not receive any response from a Client Plan to MassMutual's two written requests (one by certified mail) for such approval to the extent such requests are made prior to an in-kind transfer.

3. MassMutual notes that, with respect to the types of transactions described herein, the Securities and Exchange Commission (SEC) Rule 17a–7 (Rule 17a–7) permits transfers involving only those securities for which market quotations are readily available and which do not include restricted securities (such as those described by SEC Rule 144) or other securities for which market quotations are not readily available.[15] Therefore, MassMutual represents that, to the extent the Independent Fiduciary of a Client Plan approves the investment in the Funds, the purchase of Fund shares by the separate investment account has been/will be accomplished in accordance with Rule 17a–7 and the procedures adopted by the Fund's board of directors pursuant to such Rule.

Among the conditions of Rule 17a–7 is the requirement that the transaction be effected at the ''independent current market price'' for the security involved.[16] In this regard, MassMutual represents that the ''independent current market price'' for the types of separate investment account securities involved in the transaction is determined as follows:

(A) If the security is a ''reported security'' as the term is defined in Rule 11Aa3–1 under the Securities Exchange Act of 1934 (the '34 Act) (17 CFR 240.11Aa3–1), the last sale price with respect to such security reported in the consolidated transaction reporting system (the Consolidated System); or, if there are no reported transactions in the Consolidated System that day, the average of the highest current independent bid and the lowest current independent offer for such security (reported pursuant to Rule 11Ac1–1 under the '34 Act) (17 CFR 240.11Ac1–1), as of the close of business on the separate investment account valuation date.

(B) If the security is not a reported security, and the principal market for such security is an exchange, then the last sale on such exchange or, if there is no reported transactions on such exchange that day, the average of the highest current independent bid and the lowest current independent offer on the exchange as of the close of business on the separate investment account valuation date.

(C) If the security is not a reported security and is quoted in the NASDAQ system, then the average of the highest current independent bid and the lowest current independent offer reported on Level 1 of NASDAQ as of the close of business on the separate investment account valuation date.

(D) For all other securities, the average of the highest current independent bid and the lowest current independent offer determined on the basis of reasonable inquiry from at least three independent sources as of the close of business on the separate investment account valuation date.

MassMutual represents that these valuation conditions are objective and allow for review by independent parties. The applicant additionally states that the same values are used to determine the amount of securities transferred from a separate investment account and the amount of securities received by a Fund. Therefore, according to the applicant, the total net asset value of the Fund shares received by the separate investment account, or the separate investment account on behalf of the approving Client Plans, is equal in value to the Client Plan's share of the assets of the separate investment account exchanged for shares of the Fund on the date of transfer.

4. MassMutual represents that, to the extent an Independent Fiduciary does not approve the transaction, a reasonable period of time is given for the liquidation of the Client Plan's interest in the separate investment account. According to the applicant, this may be done either in cash, in-kind or through the transfer to another separate investment account.[17] Thereafter, MassMutual states, the remaining separate investment account assets are transferred to the corresponding Funds on behalf of the Client Plans approving the transaction.

5. Although MassMutual will generally divide the assets held in a separate investment account among the Client Plans on a pro rata basis, in some instances, the separate investment account may hold ''small investments'' in fixed-income securities that are not divisible, or that can be divided only at substantial cost.[18] In these situations, solely for purposes of the prospective relief requested herein, MassMutual will treat equivalent ''small investment'' fixed income securities as fungible for allocation purposes if such securities have the same coupon rates, maturities and credit ratings at the time of the transaction.[19] MassMutual will allocate such fixed-income securities among the Client Plans in a manner such that each receives its pro rata share of the value of such securities.[20]

6. MassMutual represents that the proposed exemption is in the interest of participants and beneficiaries because it provides for Client Plan investment in Fund shares and allows for such Funds to be managed by different managers over time, without requiring the costs attendant to asset liquidation. MassMutual additionally represents that the proposed exemption is protective of participants and beneficiaries in that it requires notice to, and consent of, an independent fiduciary. MassMutual

the investment adviser of the investment company is also a fiduciary with respect to the plan. PTE 97–41, 62 FR 42830 (Aug. 8, 1997), permits a plan to purchase shares of a registered open-end investment company in an in-kind exchange for the plan's collective investment fund assets where the bank or plan adviser of the fund is also a fiduciary of the plan.

[15] MassMutual retains ongoing responsibilities under ERISA's general standards of fiduciary conduct with respect to plans electing to remain as investors in the separate investment account and with respect to other aspects of the transfers.

[16] Rule 17a–7 also includes the following requirements: (a) the transaction must be consistent with the investment objectives and policies of the Fund, as described in its registration statement; (b) the security that is the subject of the transaction must be one for which market quotations are readily available; (c) no brokerage commissions or other remuneration may be paid in connection with the transaction; and (d) the Fund's board of directors (including a majority of those directors who are independent of the Fund's investment adviser) must adopt procedures to ensure that the requirements of Rule 17a–7 are followed, and determined no less frequently than quarterly that the transactions during the preceding quarter were in compliance with such procedures.

[17] In these situations, Client Plans will receive, prior to the transfer date, cash or their pro rata portions of each separate investment account asset. To the extent a Client plan seeks to transfer its interest to another separate investment account, such transfer will occur without cost or penalty.

[18] This would apply in the case of a separate investment account which held portfolio securities and did not purchase shares of a mutual fund. These investments will typically be issued in units of $1,000 or more.

[19] In order to establish what constitutes ''small investments'' MassMutual proposes that this exception from the general pro rata division rule be available only for investment positions in fixed-income securities which, in the aggregate, constitute no more than one (1) percent of the separate investment account's assets. This one (1) percent limit will ensure that the ''small investment'' positions in the fixed-income securities will represent a de minimis portion of the overall assets held by the separate investment account at the time of the transactions.

[20] MassMutual represents that the valuation of fixed income securities will be performed in accordance with Rule 17a–7.

represents that the exemption is administratively feasible in that the values given the Fund shares and the separate account securities are objectively calculated in accordance with securities laws and in accordance with procedures approved by the Fund's board of directors pursuant to such laws.

7. MassMutual requests retroactive relief for the purchase by the Client Plan (directly or through a single customer or pooled separate account or other pooled vehicle) of shares of one or more Funds in exchange for assets of the Client Plan transferred in-kind from a Separate Account. MassMutual states that such purchases met the criteria of section 408(a) of the Act since, among other things:

(a) No sales commissions, redemption fees, or other fees were paid by the Client Plan.

(b) All transferred assets were either cash or securities for which market quotations were readily available.

(c) The assets transferred in-kind to the Funds constituted the Client Plan's pro rata portion of the assets held by the Separate Account immediately prior to the transfer.

(d) The Client Plan received Fund shares having a total net asset value equal to the value of the assets transferred by the Client Plan on the date of the transfer, as determined in a single valuation performed in the same manner at the close of the same business day with respect to all Client Plans participating in the transaction on such date, in accordance with the procedures set forth in Rule 17a–7 of the 1940 Act (using sources independent of MassMutual and the Fund) and the procedures established by the Funds pursuant to Rule 17a–7 for the valuation of such assets.

(e) An Independent Fiduciary with respect to each Client Plan received advance written notice of an in-kind transfer and purchase of assets and full written disclosure of information concerning the Funds, including:

(1) A current prospectus for each Fund to which the Separate Account's assets may be transferred, updated as necessary;

(2) A statement describing the investment advisory and other fees to be charged to, or paid by, a Client Plan and the Funds to the Fund Adviser, including the nature and extent of any differential between the rates of the fees paid by the Fund and the rates of the fees paid by the Client Plan in connection with the Client Plan's investment in the Separate Account;

(3) A statement of the reasons why MassMutual considered such investment to be appropriate for the Client Plan; and

(4) A statement describing whether there were any limitations applicable to MassMutual with respect to which Client Plan assets would be invested in Fund shares, including the nature of the limitations.

(f) The Independent Fiduciary was allowed the opportunity to: (1) Opt-out (including by selling its interest in a pooled vehicle) of the in-kind transfer of the Client Plan's interest in the Separate Account for shares of the Funds without penalty; or (2) approve the in-kind transfer (on the basis of the prospectus and disclosure referred to in paragraph (e) of Section I) consistent with the responsibilities, obligations, and duties imposed on fiduciaries by Part 4 of Title I of the Act. In this regard, approval for the in-kind transfer of a Client Plan's interest in the Separate Account was presumed notwithstanding that MassMutual did not receive any affirmative response from a Client Plan pursuant to MassMutual's two written requests (one by certified mail) for such approval, provided that the first such request occurred at least 90 days before the in-kind transfer and the second such request occurred within 45 days thereafter.

(g) MassMutual sent a written confirmation by regular mail or personal delivery to the Independent Fiduciary of each Client Plan participating in the in-kind transfer, no later than 105 days after completion of each purchase, containing:

(1) The number of Separate Account units held by the Client Plan immediately before the transfer, and the related per unit value and the total dollar amount of such units; and

(2) The number of Fund shares held by the separate account immediately following the transfer, and the related per share net asset value and the total dollar amount of such shares.

(h) All other dealings between the Client Plan and the Funds were on a basis no less favorable to the Client Plan than dealings between the Funds and other shareholders holding the same class of shares as the Client Plans.

8. MassMutual also requests prospective relief for the purchase by the Client Plan (directly or through a single customer or pooled separate account or other pooled vehicle) of shares of one or more Funds in exchange for assets of the Client Plan transferred in-kind from a Separate Account. MassMutual states that such a purchase meets the criteria of section 408(a) of the Act since, among other things:

(a) The assets transferred in-kind to the Funds will constitute the Client Plan's pro rata portion of the assets held by the Separate Accounts immediately prior to the transfer. Notwithstanding the foregoing, the allocation among Client Plans of fixed-income securities held by a Separate Account on the basis of each Client Plan's pro rata share of the aggregate value of such securities will not fail to meet the requirements of this subsection if:

(1) The aggregate value of the fixed-income securities does not exceed one percent of the total value of the assets held by the Separate Account immediately prior to the transfer; and

(2) Such securities have the same coupon rate and maturity, and at the time of the transfer, the same credit ratings as provided from nationally recognized statistical rating agencies.

(b) An Independent Fiduciary with respect to each Client Plan will receive advance written notice of the in-kind transfer and purchase and full written disclosure of information concerning the Funds including:

(1) The identity of the securities that will be valued in accordance with Rule 17a–7(b)(4) under the 1940 Act;

(2) The identity of any fixed-income securities allocated on the basis of each Client Plan's pro rata share of the aggregate value of such securities;

(3) Upon request of the Independent Fiduciary, a copy of the proposed exemption and/or a copy of the final exemption, once such documents are published in the **Federal Register**; and

(4) The date on which the in-kind purchase will take place.

(c) MassMutual will send by regular mail or personal delivery to the Independent Fiduciary of each Client Plan that purchases Fund shares pursuant to the in-kind transfer:

(1) Not later than 30 days after the completion of the purchase, a written confirmation containing:

(A) The identity of each security valued in accordance with Rule 17a–7(b)(4) under the 1940 Act;

(B) The current market price, as of the date of the in-kind transfer, of each such security involved in the purchase of Fund shares; and

(C) The identity of each pricing service or market-maker consulted in determining the current market price of such securities; and

(2) Not later than 90 days after each in-kind transfer, a written confirmation which contains:

(A) The number of Separate Account units held by such affected Client Plan immediately before the in-kind transfer (and the related per unit value and the

aggregate dollar value of the units transferred); and

(B) The number of shares in the Funds that are held by such affected Client Plan following the in-kind transfer (and the related per share net asset value and the aggregate dollar value of the shares received).

(d)(1) MassMutual will provide the Independent Fiduciary of each Client Plan holding shares of the Funds with—

(A) A copy of an updated prospectus of such Fund, at least annually; and

(B) Upon request of the Independent Fiduciary, a report or statement (which may take the form of the most recent financial report, the current statement of additional information, or some other written statement) containing a description of all fees paid by the Fund to MassMutual or its affiliates.

(2) With respect to each of the Funds in which a Client Plan invests, in the event such Fund places brokerage transactions with an affiliate of MassMutual, MassMutual will provide the Independent Fiduciary of such Client Plan at least annually with a statement specifying:

(A) The total, expressed in dollars, of brokerage commissions of each Fund's investment portfolio that are paid to an affiliate of MassMutual by such Fund;

(B) The total, expressed in dollars, of brokerage commissions of each Fund's investment portfolio that are paid by such Fund to brokerage firms unrelated to MassMutual;

(C) The average brokerage commissions per share, expressed as cents per share, paid to an affiliate of MassMutual by each portfolio of a Fund; and

(D) The average brokerage commissions per share, expressed as cents per share, paid by each portfolio of a Fund to brokerage firms unrelated to MassMutual.

(e) The Independent Fiduciary may: (1) Opt-out (including by selling its interest in a pooled vehicle) of the in-kind exchange of the Client Plan's interest in the Separate Account for shares of the Funds without penalty; or (2) approve the in-kind transfer (on the basis of the prospectus and disclosure referred to in paragraph (b) of section II and paragraph (e) of Section I) consistent with the responsibilities, obligations, and duties imposed on fiduciaries by Part 4 of Title I of the Act. In this regard, approval for the in-kind transfer of a Client Plan's interest in the Separate Account in exchange for Fund shares may be presumed notwithstanding that MassMutual does not receive any response from a Client Plan pursuant to MassMutual's two written requests (one by certified mail) for such approval, provided that the first such request occurs at least 90 days before the in-kind transfer and the second such request occurs within 45 days thereafter.

(f) All of a Client Plan's assets held in a Separate Account (other than Fund shares already held in the Account) will be transferred in-kind to one or more of the Funds in exchange for Fund shares, except that any Plan assets in the Separate Account which are not suitable for acquisition by the Funds will be liquidated as soon a reasonably practicable, and the cash proceeds will be invested directly in shares of the Funds.

(g) The authorization described in paragraph (e) of Section II will be terminable at will by the Independent Fiduciary of a Client Plan, without penalty to such Client Plan. Such termination will be effected by MassMutual redeeming the shares of the Fund(s) held by the affected Client Plan or selling its interest in a Separate Account in one business day, provided that if, due to circumstances beyond the control of MassMutual, the redemption cannot be executed within one business day, MassMutual will have one additional business day to complete such redemption.

9. MassMutual requests retroactive relief for the receipt of fees by MassMutual from the Funds, for acting as an investment adviser for such Funds, as well as for providing other services to the Funds which are ''Secondary Services,'' as defined in Section VI(i), in connection with the investment by the Client Plans for which MassMutual serves as a fiduciary in shares of the Funds. MassMutual states that such receipt of fees meets the criteria of section 408(a) of the Act since, among other things:

(a) As to each Client Plan, the combined total of all fees received by MassMutual for the provision of services to the Client Plan, and for the provision of services to a Fund was not in excess of ''reasonable compensation'' within the meaning of section 408(b)(2) of the Act.

(b) The price paid or received by a Client Plan for shares in a Fund was the net asset value of such share, as defined in Section VI(g), at the time of the transaction and was the same price that would have been paid or received for the shares by any other investor at that time.

(c) Neither MassMutual, other than in its capacity as agent for the Funds, nor any officer or director of MassMutual, purchases or sells shares of the Funds from or to any Client Plan.

(d) The Independent Fiduciary approved the fees to be paid by the Funds to MassMutual as such fees related to:

(1) Fund shares purchased by a Client Plan for cash;

(2) Fund shares purchased by a Client Plan pursuant to an in-kind transfer (upon the Independent Fiduciary's consideration of the information described in paragraph (e) of Section I and paragraph (b) of Section II);

(3) The addition of a Secondary Service (as defined in Section V (i)) provided by MassMutual to the Fund for which a fee is charged, or an increase in the rate of any fee paid by the Funds to MassMutual for any Secondary Service that resulted either from an increase in the rate of such fee or from a decrease in the number or kind of services performed by MassMutual for such fee over an existing rate for such Secondary Service that had been authorized by the Independent Fiduciary of a Client Plan. In this regard, such approvals were presumed notwithstanding that MassMutual did not receive any response from a Client Plan to MassMutual's two written requests (one by certified mail) for approval of a change in the rates of fees provided that the first such request occurred at least 90 days before the in-kind transfer and the second such request occurred within 45 days thereafter. Such approval may have been limited solely to the investment advisory and other fees paid by the mutual fund in relation to the fees paid by a Client Plan and did not relate to any other aspects of such investment.

(e) The Fund Adviser did not receive any fees payable pursuant to Rule 12b–1 under the 1940 Act in connection with the transactions.

(f) The Plan did not pay any plan-level investment management, investment advisory or similar fee with respect to the Client Plan assets invested in such shares for the entire period of such investment. This condition did not preclude the payment of investment advisory fees by an investment company under the terms of its investment advisory agreement adopted in accordance with section 15 of the Investment Company Act of 1940.

(g) On an annual basis, MassMutual provided the Independent Fiduciary of each Client Plan holding shares of the Funds with—

(1) A copy of an updated prospectus of such Fund; and

(2) Upon request of the Independent Fiduciary, a report or statement (which may take the form of the most recent financial report, the current statement of additional information, or some other

written statement) containing a description of all fees paid by the Fund to MassMutual or its affiliates.

(3) Oral or written responses to inquiries of the Independent Fiduciary as they arose.

10. MassMutual also requests prospective relief for the receipt of fees by MassMutual from the Funds, for acting as an investment adviser for such Funds, as well as for providing other services to the Funds which are ''Secondary Services,'' as defined in Section VI(i), in connection with the investment in shares of the Funds by the Client Plans for which MassMutual serves as a fiduciary. MassMutual states that such receipt of fees meets the criteria of section 408(a) of the Act since, among other things:

(a) For each Client Plan using the nondiscretionary fee structure described in paragraph (d)(2) of Section IV with respect to investments in a particular Fund, the Independent Fiduciary of the Client Plan will receive full written disclosure in a Fund prospectus or otherwise of any increases in the rates of fees charged by MassMutual to the Funds for investment advisory services.

(b) All authorizations made by an Independent Fiduciary regarding investments in a Fund and the fees paid to MassMutual will be subject to an annual reauthorization, wherein any such prior authorization referred to in Section III(d) shall be terminable at will by the Client Plan, without penalty to the Client Plan, upon receipt by MassMutual of written notice of termination. The Independent Fiduciary will be supplied with a Termination Form, at the times specified in paragraph (c) of Section IV, with instructions on the use of the form, including the following information: (1) The authorization is terminable at will by any of the Client Plans, without penalty to such Client Plans, upon receipt by MassMutual of written notice from the Independent Fiduciary; and (2) Failure by the Independent Fiduciary to return the Termination Form on behalf of a Client Plan will be deemed to be an approval of the additional Secondary Service for which fee is charged or increase in the rate of any fees, if such Termination Form is supplied pursuant to the requirements of Section IV, and will result in the continuation of the authorizations of MassMutual to engage in the transactions on behalf of such Client Plan.

(c) The Independent Fiduciary will be supplied with a Termination Form annually; provided that the Termination Form need not be supplied to the Independent Fiduciary pursuant to this paragraph sooner than six months after such Termination Form is supplied pursuant to paragraph (e) of Section IV, except to the extent required to disclose an additional service or an increase in fees.

(d) Each Client Plan will satisfy either (but not both) of the following:

(1) For a Client Plan for which MassMutual serves as a non-discretionary trustee, the Plan will not pay any Plan-level investment management fees, investment advisory fees, or similar fees to MassMutual with respect to Client Plan assets invested in the Funds. This condition will not preclude the payment of investment advisory fees, or similar fees, by a Fund to MassMutual under the terms of its investment advisory agreement adopted in accordance with section 15 of the 1940 Act, nor will it preclude the payment of fees for Secondary Services to MassMutual pursuant to a duly adopted agreement between MassMutual and the Funds.

(2) For a Client Plan for which MassMutual serves as a discretionary fiduciary (*i.e.,* a trustee or investment manager), such Client Plan will pay MassMutual an investment advisory fee based on total Client Plan assets from which a credit had been subtracted representing such Client Plan's pro rata share of investment advisory fees paid by the Funds. This condition will not preclude the payment of fees for Secondary Services to MassMutual pursuant to a duly adopted agreement between MassMutual and the Funds.

(e)(1) For each Client Plan using the fee structure described in paragraph (d)(1) of Section IV with respect to investments in a particular Fund, an increase in the rate of fees paid by the Fund to MassMutual regarding any investment management services, investment advisory services, or similar services that MassMutual provides to the Fund over an existing rate for such services that had been authorized by an Independent Fiduciary in accordance with paragraph (d) of Section III; or

(2) For any Client Plan under this exemption, an addition of a Secondary Service (as defined in Section V (i)) provided by MassMutual to the Fund for which a fee is charged, or an increase in the rate of any fee paid by the Funds to MassMutual for any Secondary Service that results either from an increase in the rate of such fee or from a decrease in the number or kind of services performed by MassMutual for such fee over an existing rate for such Secondary Service that had been authorized by the Independent Fiduciary of a Client Plan in accordance with paragraph (d) of Section III, MassMutual will, at least 30 days in advance of the implementation of such increase, provide a written notice (which may take the form of a proxy statement, letter, or similar communication that is separate from the prospectus of the Fund and which explains the nature and amount of the increase in fees) to the Independent Fiduciary of the Client Plan. Such notice shall be accompanied by a Termination Form with instructions as described in Section IV.

Notice to Interested Persons: The applicant represents that the potentially interested participants and beneficiaries cannot all be identified and therefore the only practical means of notifying such participants and beneficiaries of this proposed exemption is by the publication of this notice in the **Federal Register**. Comments and requests for a hearing must be received by the Department not later than 45 days from the date of publication of this notice of proposed exemption in the **Federal Register**.

FOR FURTHER INFORMATION CONTACT: Christopher Motta of the Department, telephone (202) 693–8540. (This is not a toll-free number.)

State Farm Mutual Automobile Insurance Company and State Farm VP Management Corp.

[Exemption Application No. D–10961]

Proposed Exemption

The Department of Labor is considering granting an exemption under the authority of section 408(a) of the Act and section 4975(c)(2) of the Code and in accordance with the procedures set forth in 29 CFR part 2570, Subpart B (55 FR 32836, 32847, August 10, 1990).[21]

Section I: Transactions

If the exemption is granted, the restrictions of sections 406(a)(1)(A) through (D) and 406(b)(2) of the Act and the sanctions resulting from the application of section 4975 of the Code, by reason of section 4975(c)(1)(A) through (D) of the Code shall not apply to the purchase or redemption of an institutional class of shares (the Institutional Shares) of State Farm mutual funds (the Fund(s)), open-end management investment companies registered under the Investment Company Act of 1940 (the 1940 Act), by pension plans (the Plan(s)), as defined in Section III (h), below, which are established by:

[21] For purposes of this proposed exemption, references to specific provisions of Title I of the Act, unless otherwise specified, refer to the corresponding provisions of the Code.

(a) Independent contractor agents (the Agent(s)) of State Farm Mutual Automobile Insurance Company (State Farm) or its affiliates, who are also registered representatives of State Farm VP Management Corp. (SFVPMC), for themselves and their employees, and

(b) The family members of such Agents (the Family Member(s))(as defined in section 3(15) of the Act), provided that the conditions set forth in Section II, below are satisfied.

Section II: Conditions

(a) Neither State Farm nor its affiliates has discretionary authority or control with respect to the investment of the plan assets involved in the transaction or renders investment advice (within the meaning of 29 CFR 2510.3–21(c)) with respect to those assets.

(b) Plans do not pay any plan-level investment management, investment advisory, or similar fees to State Farm or its affiliates in connection with the investment of the assets of such Plans in any of the Funds.

(c) Plans do not pay any redemption fees in connection with the sale of shares of any of the Funds by such Plans.

(d) Plans do not pay any sales commissions in connection with the acquisition or sale of shares of any of the Funds, and the Agents do not receive any sales commissions or any other compensation or benefit, direct or indirect, in connection with the transactions that are the subject of this exemption. In this regard, neither State Farm nor any of its affiliates provides production credit, bonus, trip, or other sales incentive to such Agents based on such transactions.

(e) All dealings between the Plans and the Funds and State Farm and its affiliates are on a basis no less favorable to such Plans than such dealings are with other shareholders of the Funds.

(f) The price paid or received by a Plan for shares in a Fund is the net asset value per share, as defined, in Section III (d), below, at the time of the transaction and is the same price that would have been paid or received for such shares by any other investor in such Fund at that time.

(g) For each Plan, the combined total of all fees received by State Farm and its affiliates for the provision of services to such Plan, and in connection with the provision of services to any of the Funds in which such Plan may invest, are not in excess of ''reasonable compensation'' within the meaning of section 408(b)(2) of the Act.

(h) Neither State Farm nor its affiliates receives any fees payable pursuant to Rule 12b-1 under the 1940 Act in connection with the proposed transactions.

(i) The Plans are not employee benefit plans sponsored or maintained by State Farm or its affiliates.

(j)(1) Each Agent, or a Family Member of such Agent (as defined in section 3(15) of the Act) in the case of a Plan sponsored by such Family Member, or each participant (the Participant(s)) in the case of a Plan which provides for participant investment direction, receives in advance of any initial investment in a Fund by such Plan (or Participant's account, in the case of a participant directed individual account plan) a full and detailed written disclosure of information concerning each Fund in which such Plan or Participant's account, as the case may be, is considering investing, including but not limited to:

(A) A current prospectus for such Fund;

(B) A statement describing the fees for investment advisory, investment management, or similar services, a statement describing any fees for secondary services (Secondary Services), as defined below in Section III (f), (including but not limited to fees for acting as custodian, transfer agent, or for providing administrative, brokerage, or other services) payable to State Farm or its affiliates, and all other fees to be charged to or paid by such Plan, Participant's account, or such Fund to State Farm or its affiliates;

(C) A statement regarding appropriate investments for retirement plans and explaining why such Fund would be an appropriate investment for such Plan or Participant's account, as the case may be; and

(D) Upon the request of an Agent, a Family Member, or a Participant in a participant directed individual account plan, as the case may be, a copy of this proposed exemption and/or a copy of the final exemption, if granted, as such documents appear when published in the **Federal Register**.

(2) Each Participant, in the case of a Plan that does not provide for participant investment direction, receives from the fiduciary responsible for directing the investment of plan asset in advance of any initial investment in a Fund by such Plan:

(A) A statement that the Plan is investing in the Funds;

(B) The name of each Fund in which such Plan is investing; and

(C) A current prospectus for each such Fund.

(k) Any investment of the assets of a Plan (or a Participant's account in the case of a participant directed individual account plan) in each particular Fund is implemented only at the express direction of an Agent, Family Member, or Participant in a participant directed individual account plan, as appropriate, after such Agent, Family Member, or Participant receives the information described in paragraph (j) of Section II, above.[22]

(l) Pursuant to paragraph (k) of Section II, above, the investment of any assets of a Plan (or Participant's account, in the case of a participant directed individual account plan) in a Fund shall be terminable at will by an Agent, Family Member, or Participant, as appropriate, without penalty to such Plan (or Participant's account, in the case of an individually directed account plan), upon receipt by State Farm or its affiliates of a written notice of termination. A form (the Termination Form) expressly providing an election to terminate the investment in a Fund by a Plan (or Participant's account, in the case of an individually directed account plan) with instructions on the use of the form must be supplied to Agents, Family Members, or Participants, as the case may be, no less than annually; provided that the Termination Form need not be supplied to Agents, Family Members, or Participants, pursuant to this paragraph, sooner than six (6) months after such Termination Form is supplied pursuant to paragraph (m) of this Section II, below, except to the extent required by such paragraph in order to disclose an additional service or a fee increase. The instructions for the Termination Form must include a statement that the investment by a Plan in the Fund is terminable at will by a Plan (or Participant's account in the case of a participant directed individual account plan) without penalty to such Plan (or Participant's account), upon receipt by State Farm or its affiliates of written notice from the appropriate Agent, Family Member, or Participant.

[22] The Department notes that the general standards of fiduciary conduct under the Act would apply to the investment transactions permitted by this proposed exemption, and that satisfaction of the conditions of this proposed exemption should not be viewed as an endorsement of any particular investment by the Department. Section 404 of the Act requires, among other things, that a fiduciary discharge his duties with respect to a plan solely in the interest of the plan's participants and beneficiaries and in a prudent fashion. Accordingly, the Department notes that the selection and the retention of any of the Funds as an investment or an investment option under a Plan is a fiduciary act. In this regard, the Department expects the fiduciary of a Plan to determine, if such selection and retention of any of the Funds by a Plan is appropriate after taking into consideration the investment performance of such Funds and the fees paid by such Funds (including advisory fees and administrative fees paid to State Farm and other persons).

(m)(1) In the event of an increase in fees paid by a Fund for any service, or

(2) In the event of an addition of any Secondary Service for which a fee is charged, or

(3) In the event of an increase in the rate of any fee that results either from an increase in the rate of such fee or from the decrease in the number or kind of services performed for such fee, State Farm or its affiliates will, at least 30 days in advance of the implementation of such fee increase or a fee for an additional service or increase in the rate of a fee, provide a written notice (which may take the form of a proxy statement, letter, or similar communication that is separate from the prospectus of such Fund and that explains the nature and amount of the additional service for which a fee is charged or the increase in fees or the increase in the rate of any fee) to the appropriate Agent, Family Member, or Participant in a participant directed individual account plan. Such notice shall be accompanied by a Termination Form with instructions, as described above in paragraph (l) of this Section II, which will permit a Plan (or Participant's account, in the case of a participant directed individual account plan) to redeem shares of such Fund without penalty.

(n)(1) On an annual basis, each Agent, Family Member, or Participant in a participant directed individual account plan receives from State Farm the following information for each Fund in which a Plan (or Participant's account, in the case of a participant directed individual account plan) invests:

(a) A copy of the current prospectus,

(b) Upon the request of the appropriate Agent, Family Member, or Participant in a participant directed individual account plan, a copy of the Statement of Additional Information that contains a description of all fees paid by such Fund to State Farm or its affiliates;

(c) A copy of the annual report prepared by State Farm or its affiliates that includes information about the portfolios in such Fund, as well as audit findings of an independent auditor, within 60 days of the preparation of such report; and

(d) Oral or written responses to inquiries of an Agent, Family Member, or Participant, as such responses arise.

(2) On an annual basis, each Participant in the case of a Plan that does not provide for participant investment direction receives from the fiduciary responsible for directing the investment of plan assets copies of the annual report for each of the Funds in which the assets of such Plan are invested.

(o) Any Plan subject to this proposed exemption that is a prototype retirement plan sponsored by State Farm or its affiliates may not require the investment of a minimum percentage of the total assets of such Plan in State Farm investment products.

(p) State Farm or its affiliates maintain for a period of six (6) years the records necessary to enable the persons described in paragraph (q) of this Section II, below, to determine whether the conditions of this exemption have been met, except that—

(1) A prohibited transaction will not be considered to have occurred if, due to circumstances beyond the control of State Farm or its affiliates, the records are lost or destroyed prior to the end of the six-year period; and

(2) No party in interest other than State Farm and its affiliates shall be subject to the civil penalty that may be assessed under section 502(i) of the Act, or to the taxes imposed by section 4975(a) and (b) of the Code, if the records are not maintained or are not available for examination as required by paragraph (q) of this Section II, below.

(q)(1) Except as provided in paragraph (q)(2) of this Section II, below, and notwithstanding any provisions of section 504(a)(2) of the Act, the records referred to in paragraph (p) of this Section II, above, are unconditionally available at their customary location for examination during normal business hours by—

(i) Any duly authorized employee or representative of the Department or the Internal Revenue Service,

(ii) Any Agent, Family Member, Participant in the case of a participant directed individual account plan, or any other fiduciary of a Plan who has authority to acquire or dispose of shares of any of the Funds owned by such Plan, or any duly authorized employee or representative of such fiduciary, and

(iii) Any participant or beneficiary of a Plan or duly authorized employee or representative of such participant or beneficiary;

(2) None of the persons described in paragraph (q)(1)(ii) and (iii) of this Section II, above, shall be authorized to examine trade secrets of State Farm or its affiliates, or commercial or financial information that is privileged or confidential.

Section III—Definitions

For purposes of this proposed exemption:

(a) The term, ''affiliate'' or ''affiliates,'' means:

(1) Any person directly or indirectly through one or more intermediaries, controlling, controlled by, or under common control with the person;

(2) Any officer, director, employee, relative (as defined in paragraph (e) of this Section III, below), or partner in any such person; and

(3) Any corporation or partnership of which such person is an officer, director, partner, or employee.

(b) The term, ''control,'' means the power to exercise a controlling influence over the management or policies of a person other than an individual.

(c) The term, ''Fund or Funds,'' shall include any diversified open-end investment company or companies registered under the 1940 Act for which State Farm or its affiliates serve as an investment adviser and may also serve as a custodian, dividend disbursing agent, shareholder servicing agent, transfer agent, Fund accountant, or provide some other Secondary Service (as defined in paragraph (f) of this Section III, below), which has been approved by such Fund.

(d) The term, ''net asset value,'' means the amount for purposes of pricing all purchases and sales, calculated by dividing the value of all securities (determined by a method as set forth in a Fund's prospectus and Statement of Additional Information) and other assets belonging to such Fund or portfolio of such Fund, less the liabilities charged to each such portfolio or Fund, by the number of outstanding shares.

(e) The term, ''relative,'' means a ''relative'' as that term is defined in section 3(15) of the Act (or a ''member of the family'' as that term is defined in section 4975(e)(6) of the Code), or a brother, a sister, or a spouse of a brother or a sister.

(f) The term, ''Secondary Service,'' means a service other than an investment management, investment advisory, or similar service, which is provided by State Farm or its affiliates to a Fund, including custodial, accounting, brokerage, administrative, or any other service.

(g) ''Termination Form,'' means the form supplied to an Agent, Family Member, or Participant in a participant directed individual account plan, as appropriate, that expressly provides an election to terminate on behalf of a Plan (or the Participant's account in the case of a participant directed individual account plan) the investment of plan assets in a Fund. Such Termination Form may be used at will by an Agent, Family Member, or Participant in a participant directed individual account plan to terminate the investment by a Plan in a Fund without penalty to the Plan (or the Participant's account, in the

case of a participant directed individual account plan) and to notify State Farm and its affiliates in writing to effect a termination by selling the shares of a Fund held by the Plan (or Participant's account) requesting such termination within one business day following receipt by State Farm or its affiliates of the form; provided that if, due to circumstances beyond the control of State Farm or its affiliates, the sale cannot be executed within one business day, State Farm or its affiliates shall have one additional business day to complete such sale.

(h) The term, ''Plan'' or ''Plans,'' means any pension plan subject to the Act and/or the Code, including but not limited to plans that provide for participant investment direction, traditional individual retirement accounts (IRAs), SEP-IRAs, and Keogh plans.

Effective Date: This proposed exemption, if granted, is effective, as of May 1, 2001.

Summary of Facts and Representations

1. State Farm is a mutual insurance company organized under the laws of the State of Illinois. It is a property/casualty insurance company and is the parent company of a number of life and property/casualty insurance companies and financial services companies.

2. SFVPMC, organized as a Delaware corporation in 1996, is a wholly-owned subsidiary of State Farm. SFVPMC is registered as a broker-dealer with the Securities and Exchange Commission and is a member of the National Association of Securities Dealers, Inc. SFVPMC serves as the distributor of variable life insurance policies and variable annuity contracts issued by State Farm companies. State Farm Agents act as registered representatives of SFVPMC in connection with the sale of such insurance policies and variable annuity contracts.

3. State Farm Investment Management Corp. (SFIMC), organized as a Delaware corporation in 1966, is a wholly-owned subsidiary of State Farm. SFIMC is registered as an investment adviser under the 1940 Act. SFIMC performs investment advisory, transfer agent, and underwriting services for State Farm.

4. Although there are a modest number of State Farm Agents who are employees, State Farm and its subsidiaries sell their products through an exclusive agency force—a majority of which are independent contractors. State Farm selects and trains the Agents and provides them with exclusive agency contracts. State Farm works closely with the Agents in a number of areas, but it does not actively supervise them. This proposed exemption concerns only those State Farm Agents who are independent contractors, and all references to Agents should be read to apply to Agents of State Farm and its subsidiaries that are independent contractors.

5. Many Agents hire employees to assist them in their sales and related activities. It is common for Agents to sponsor for themselves and for their employees retirement plans that are subject to the Act and/or the Code. In addition, Family Members of the Agents (as defined in section 4975(e)(6) of the Code) may also establish for themselves plans that are subject to the Act and/or the Code. These plans most frequently include 401(a) plans, IRAs, and SEP-IRAs. Many of these plans are funded with annuity and insurance contracts issued by life insurance subsidiaries of State Farm.

6. During the fourth quarter of 2000, State Farm established the Funds, listed below, and placed $410,000,000 into such Funds as seed money. The seed money was allocated to the Funds as follows:

(1) State Farm Equity Fund ($20 million); (2) State Farm Small Cap Equity Fund ($50 million); (3) State Farm International Equity Fund ($50 million); (4) State Farm S&P 500 Index Fund ($50 million); (5) State Farm Small Cap Index Fund ($50 million); (6) State Farm International Index Fund ($50 million); (7) State Farm Equity and Bond Fund ($50 million); (8) State Farm Bond Fund ($30 million); (9) State Farm Tax Advantaged Bond Fund ($50 million); and (10) State Farm Money Market Fund ($10 million).

It is represented that the seed money was entirely derived from State Farm assets and not from the assets of any employee benefit plan. State Farm has informed the Department that it has no intention at this time of withdrawing such seed money from the Funds. It is further represented that the viability of the Funds is not dependent in any manner upon the investment of assets of any employee benefit plan.

For each Fund, there are several classes of shares. As of September 2, 2001, the percentage of State Farm's ownership in each portfolio of the Funds and each class of retail shares within each portfolio was as follows: (1) State Farm Equity Fund A (29.41%) and State Farm Equity Fund B (33.86%); (2) State Farm Small Cap Equity Fund A (93.45%) and State Farm Small Cap Equity Fund B (97.57%); (3) State Farm International Equity Fund A (95.40%) and State Farm International Equity Fund B (98.59%); (4) State Farm S&P 500 Index Fund A (76.06%) and State Farm S&P 500 Index Fund B (89.74%); (5) State Farm Small Cap Index Fund A (94.07%) and State Farm Small Cap Index Fund B (98.26%); (6) State Farm International Index Fund A (96.76%) and State Farm International Index Fund B (92.91%); (7) State Farm Equity and Bond Fund A (85.00%) and State Farm Equity and Bond Fund B (94.43%); (8) State Farm Bond Fund A (55.72%) and State Farm Bond Fund B (60.45%); (9) State Farm Tax Advantaged Bond Fund A (94.41%) and State Farm Tax Advantaged Bond Fund B (99.53%); and (10) State Farm Money Market Fund A (61.67%) and State Farm Money Market Fund B (99.98%).

7. In early 2001, State Farm began offering shares of the ten (10) separate Funds, listed in paragraph 6 above, for sale through the State Farm Mutual Fund Trust (the Trust). The Trust is an open-end management investment company organized as a business trust under the laws of the State of Delaware. Each of the Funds has its own investment objective, investment policies, restrictions, and risks that are generally reflected in the name of each Fund.

8. SFIMC is the investment adviser to each of these Funds. It is represented that the State Farm S&P 500 Index Fund, the State Farm Small Cap Index Fund, and the State Farm International Index Fund (the Equity Index Funds) seek to achieve their respective investment objectives by investing all of their assets in the S&P 500 Index Master Portfolio, the International Index Master Portfolio, and the Russell 2000 Index Master Portfolio (the Master Portfolios) for which Barclays Global Fund Advisors (Barclays), a party unrelated to State Farm, serves as the investment adviser.

9. State Farm, through the Trust, issues a separate series of shares of beneficial interest for each Fund, representing fractional undivided interests in such Fund. In this regard, for each Fund there are three (3) classes of shares, Class A shares, Class B shares, and Institutional Shares. These classes of shares are distinguished by varying sales charges and shareholder servicing fees. Class A shares have a front-end sales load of up to 3.00 percent (3%) and charge a 12b–1 distribution fee of up to .25 percent (.25%). Class B shares have no front-end load, but provide for a contingent deferred sales charge on the back end of up to 3.00 percent (3%). In addition, Class B shares charge a 12b–1 distribution fee of up to .65 percent (.65%). Finally, Institutional Shares have no sales loads or 12b–1 distribution fees.

SFVPMC is the broker-dealer, principal underwriter, and distributor for the Funds. Class A and Class B

shares of the Funds are sold through State Farm Agents who become licensed as registered representatives of SFVPMC. As of October 2000, there were approximately 9,200 State Farm Agents who were registered representatives of SFVPMC. The Institutional Shares are designed primarily for investment by employee benefit plans sponsored by State Farm and its affiliates and are not generally made available for sale to the public.

10. State Farm and its subsidiary, SFVPMC, (collectively, the Applicants) have requested a prohibited transaction exemption which would permit: (a) The independent contractor Agents of State Farm who are also registered representatives of SFVPMC; and (b) the Family Members of such Agents to direct that assets of any Plan sponsored by such Agents or Family Members be invested in the Institutional Shares of one or more of the recently established Funds.

Absent the requested relief, the Applicants are concerned that a violation of section 406(b)(2) of the Act would be deemed to occur, if assets of any of the Plans are invested in any of the Funds, because an Agent would be representing both SFVPMC and a Plan in any purchase or redemption of shares of such Funds. The Applicants are also seeking relief from any potential violations of section 406(a) of the Act and section 4975(c)(1)(A)–(D) of the Code that could be deemed to occur in the proposed transactions.

11. There are two class exemptions covering transactions similar to those at issue in this proposed exemption. The first class exemption, Prohibited Transaction Class Exemption 77–3 (PTCE 77–3) (42 FR 18734, April 8, 1977), permits the acquisition or sale of shares of an open-end investment company registered under the 1940 Act by an employee benefit plan covering only employees of such investment company, its investment adviser, principal underwriter, or ''affiliated persons'' of such entities (as defined in section 2(a)(3) of the 1940 Act). In this regard, the Applicants have determined that the proposed transactions are not within the scope of PTCE 77–3, because the Agents (and their Family Members) are not affiliated persons of any of the Funds, investment advisers to any of the Funds, or principle underwriters of such Funds within the meaning of section 2(a)(3) of the 1940 Act.

The other class exemption, Prohibited Transaction Class Exemption 77–4 (PTCE 77–4) (42 FR 18732, Apr. 8, 1977), permits the purchase or sale of shares of an open-end investment company where the investment adviser to the company is also a fiduciary of the plan. In this regard, the Applicants have determined that the proposed transactions are not within the scope of PTCE 77–4, because the investment adviser of the Funds is not a fiduciary of the Plans. However, because the proposed transactions appear to parallel the transactions contemplated by PTCE 77–3 and PTCE 77–4, the Applicants have requested administrative relief comparable to that afforded by PTCE 77–3 and PTCE 77–4.

12. As an investment adviser, SFIMC continuously furnishes an investment program for the Funds (other than the Equity Index Funds), is responsible for managing the investments of the Funds, and has responsibility for making decisions governing whether to buy, sell, or hold any particular security. In carrying out its obligations to manage the investment and reinvestment of the assets of the Funds, SFIMC performs research and obtains and evaluates pertinent economic, statistical, and financial data relevant to the investment policies of such Funds. As investment adviser to the Equity Index Funds, SFIMC monitors the performance of the Master Portfolio in which each of the Equity Index Funds invests.

Pursuant to an investment advisory agreement, adopted in accordance with section 15 of the 1940 Act, the Trust pays SFIMC compensation in the form of an investment advisory and management services fee. The amount of the fee for each Fund is described in the prospectus for such Fund. In this regard, such fee accrues daily; is paid quarterly to SFIMC; and is based on average daily net assets. It is represented that SFIMC reimburses each Fund, if and to the extent, that the total annual operating expenses of each Fund exceed a specified percentage of the average net assets of such Fund.

With respect to one of the Funds, the State Farm Equity and Bond Fund, SFIMC has agreed not to receive an investment advisory and management services fee for services rendered to such Fund. However, SFIMC will receive fees from managing the underlying Funds in which the State Farm Equity and Bond Fund invests. In this regard, SFIMC attempts to maintain approximately 60 percent (60%) of the net assets of the State Farm Equity and Bond Fund in shares of the State Farm Equity Fund and approximately 40 percent (40%) of the net assets of the State Farm Equity and Bond Fund in shares of the State Farm Bond Fund.

13. The Trust is responsible for payment of all expenses it may incur in its operation and for all of its general administrative expenses, except those expressly assumed by SFIMC. These include (by way of description and not of limitation), any share redemption expenses, expenses of portfolio transactions, shareholder servicing costs, pricing costs (including the daily calculation of net asset value), interest on amounts borrowed by the Trust, charges of the custodian and transfer agent, cost of auditing services, non-interested Trustees' fees, legal expenses, all taxes and fees, investment advisory and management service fees, certain insurance premiums, cost of maintenance of corporate existence, investor services (including allocable personnel and telephone expenses), costs of printing and mailing updated Trust prospectuses to shareholders, costs of preparing, printing, and mailing proxy statements and shareholder reports to shareholders, the cost of paying dividends, capital gains distribution, costs of Trustee and shareholder meetings, dues to the Investment Company Institute to which the Funds are members, and any extraordinary expenses, including litigation costs in legal actions involving the Trust, or costs related to indemnification of Trustees, officers and employees of the Trust. The Board of Trustees of the Trust determines the manner in which expenses are allocated among the Funds of the Trust.

14. Pursuant to a sub-advisory agreement, adopted in accordance with section 15 of the 1940 Act, SFIMC has engaged Capital Guardian Trust Company (CGTC) as the investment sub-adviser to provide day-to-day portfolio management for the State Farm Small Cap Equity Fund and the State Farm International Equity Fund. CGTC manages the investments of the State Farm Small Cap Equity Fund and the State Farm International Equity Fund, determining which securities or other investments to buy and sell for each, selecting the brokers and dealers to effect the transactions, and negotiating commissions.

For its services, SFIMC pays CGTC an investment sub-advisory fee equal to a percentage of the average daily net assets of each of the State Farm Small Cap Equity Fund and the State Farm International Equity Fund at the rates, as described in the prospectus of each Fund.

15. As stated above, Barclays is the investment adviser to the Master Portfolios. Pursuant to an investment advisory contract with the Master Portfolios, adopted in accordance with section 15 of the 1940 Act, Barclays provides investment guidance and policy direction in connection with the management of the assets of the Master

Portfolios. Barclays is entitled to receive monthly fees as compensation for its advisory and administrative services to each Master Portfolio, as described in the prospectus. This advisory fee is an expense of the Master Portfolios borne proportionately by its interest holders, such as the Equity Index Funds.

16. The Applicants represent that the requested exemption is administratively feasible in that it will not require monitoring by the Department. In this regard, State Farm or its affiliates will maintain for a period of six (6) years the records necessary to determine whether the conditions of this exemption have been met.

17. The Applicants represent that the investment in the Funds is in the best interest of the Plans and their participants and beneficiaries. In this regard, the Funds represent a wide range of investment alternatives for plan assets. The price to be paid or received by a Plan for Institutional Shares in a Fund will be the net asset value per share at the time of the transaction and will be the same price that would have been paid or received for such shares by any other investor in such Fund at that time.

The exemption will permit the Plans to acquire Institutional Shares that would not ordinarily be available to Plans of this size with minimal fees and expenses. With respect to fees, the Plans will pay no plan-level investment advisory, investment management, or similar fee to State Farm or its affiliates in connection with the investment of the assets of such Plans in the Funds, nor will the Plans pay sales commissions or redemption fees in connection with the purchase or sale of Institutional Shares of the Funds. Furthermore, neither State Farm nor its affiliates will receive any fees payable pursuant to Rule 12b-1 under the 1940 Act in connection with the proposed transactions. The costs to each such Plan of any investment in the Funds should therefore be at least comparable to the costs of investing in shares of other similar mutual funds.

18. The proposed transactions parallel the transactions contemplated by PTCE 77–3 and PTCE 77–4. In this regard, as a result of the exclusive agency relationship and other factors, the Agents and their employees identify with State Farm in a way that is similar to the identification that employees of an insurance company, an investment company, or other financial institution would have with the company that employs them. Furthermore, the proposed exemption contains conditions similar to those imposed in PTCE 77–3 and PTCE 77–4 that are designed to prevent abuse.

19. The proposed exemption contains additional safeguards to protect the interests of the Plans. In this regard, the investment of assets of a Plan (or a Participant's account in the case of a participant directed individual account plan) in each particular Fund will be implemented only at the express direction of an Agent, Family Member, or Participant in a plan that provides participant investment direction. In no event, will State Farm nor its affiliates have discretionary authority or control with respect to the investment of the plan assets involved in the proposed transactions, nor will State Farm or its affiliates render investment advice (within the meaning of 29 CFR 2510.3–21(c)) with respect to those assets.

Prior to the initial investment by any of the Plans in a Fund, annually after the initial investment, and in advance of any increase in fees, any increase in the rate of fees, or the addition of any Secondary Service for which a fee is charged, Agents, Family Members, or Participants, as appropriate, will receive from State Farm or its affiliates certain written disclosure of information concerning such Fund. Investment in the Funds will be terminable at will by a Plan without penalty, upon receipt of written notification by State Farm or its affiliates.

The proposed exemption contains a condition that ensures that fiduciaries of the Plans are not improperly induced to purchase Institutional Shares of the Fund for Plans. In this regard, Agents will not receive sales commission or any other compensation or benefit, directly or indirectly, in connection with the purchase or sale of Institutional Shares of the Funds. Furthermore, it is represented that the Agents will not be pressured in any manner to cause Plans to purchase any shares in the Funds.

The exemption, if granted, would operate to permit the Plans to purchase Institutional Shares in the Funds but would not require that the Plans be funded with the Funds. Furthermore, State Farm has confirmed to the Department that formal action will be taken through an amendment to the prototype documents, effective May 31, 2001, to delete any provision permitting the insurer to limit investment options under the prototypes. Accordingly, the proposed exemption contains a condition that any Plan that adopts a prototype retirement plan sponsored by State Farm or its affiliates must not be required under the provisions of such prototype to invest a minimum percentage of the total investments under such Plan in State Farm products.

20. In summary, the Applicants represent that the proposed transactions will satisfy the statutory criteria of section 408(a) of the Act and section 4975(c)(2) of the Code because: (a) the acquisition and sale of Institutional Shares of the Funds to the Plans parallel the transactions contemplated by PTCE 77–3 and PTCE 77–4, and the proposed exemption contains safeguards similar to the conditions in such class exemptions; (b) the Plans pay no sales commissions or redemption fees with respect to investments by such Plans in any of the Funds; (c) Agents do not receive sales commission or any other compensation or benefit, directly or indirectly, in connection with the proposed transactions; (d) the Plans do not pay any plan-level investment advisory or similar fee in connection with the investment of the assets of such Plans in any of the Funds; (e) all dealings between the Plans, any of the Funds, and State Farm and its affiliates are on a basis no less favorable to such Plans than such dealings are with other shareholders of such Funds; (f) the price paid or received by a Plan for Institutional Shares in a Fund is the net asset value per share at the time of the transaction and is the same price that would have been paid or received for such shares by any other investor in such Fund at that time; (g) for each Plan, the combined total of all fees received by State Farm and its affiliates for the provision of services to such Plan, and in connection with the provision of services to any of the Funds in which such Plan may invest, are not in excess of ''reasonable compensation'' within the meaning of section 408(b)(2) of the Act; (h) neither State Farm nor its affiliates receives any fees payable pursuant to Rule 12b–1 under the 1940 Act in connection with the proposed transactions; (i) prior to the initial investment by any of the Plans in a Fund, annually after the initial investment, and in advance of any increase in fees, any increase in the rate of fees, or the addition of any Secondary Service for which a fee is charged, Agents, Family Members, or Participants, as appropriate, receive certain written disclosure of information concerning such Fund; (j) any investment of assets of a Plan (or a Participant's account, in the case of a participant directed individual account plan) in a Fund is implemented only at the express direction of an Agent, Family Member, or Participant in a participant directed individual account plan; (k) investment by a Plan (or by a Participant's account, in the case of a individually directed account plan) in a

Fund is terminable at will by such Plan (or Participant's account), without penalty, upon receipt by State Farm or its affiliates of written notice of termination; (l) the Plans are not employee benefit plans sponsored or maintained by State Farm or its affiliates; and (m) any Plan subject to this proposed exemption which adopts a prototype retirement plan sponsored by State Farm or its affiliates must not be required under the provisions of such prototype to invest a minimum percentage of the total investments under such Plan in State Farm products.

For Further Information Contact: Ms. Angelena C. Le Blanc of the Department, telephone (202) 219–8883. (This is not a toll-free number.)

Rollover Individual Retirement Account for Brenda A. Moran (the IRA) Located in Hobbs, New Mexico

[Application No. D–11015]

Proposed Exemption

The Department is considering granting an exemption under the authority of section 4975(c)(2) of the Code and in accordance with the procedures set forth in 29 CFR Part 2570, subpart B (55 FR 32836, August 10, 1990). If the exemption is granted, the sanctions resulting from the application of section 4975 of the Code, by reason of section 4975(c)(1)(A) through (E) of the Code, shall not apply to the proposed cash sale (the Sale) of common stock (the Stock) of Bravo Energy Inc. (Bravo) by the IRA [23] to Bravo, a disqualified person with respect to the IRA, provided that the following conditions are met:

(a) The Sale is a one-time transaction for cash;

(b) The terms and conditions of the Sale are at least as favorable to the IRA as those obtainable in an arm's length transaction with an unrelated party;

(c) The IRA receives the greater of $14.24 per share of Stock or the fair market value of the Stock at the time of the Sale; and

(d) The IRA is not required to pay any commissions, costs or other expenses in connection with the Sale.

Summary of Facts and Representations

1. The IRA is an individual retirement account under section 408(a) of the Code. The Applicant is the sole participant of the IRA. As of April 30, 2001, the IRA held assets valued at approximately $2,242,747.41. Moran is the only person who has investment discretion over the assets in the IRA.

2. The IRA acquired 10,199 shares of Stock as a result of a rollover from the employee stock ownership plan of Moran Co., a New Mexico corporation. Moran Co. merged into Bravo effective as of July 31, 1991.

3. The Applicant requests an exemption for the Sale. The Applicant represent that the proposed transaction would be feasible because it would be a one-time transaction for cash. Furthermore, the Applicant states that the transaction would be in the best interest of the IRA because the Sale would enable the IRA to invest the proceeds from the Sale in assets with a higher rate of return. Finally, the Applicant represents that the transaction will be protective of the rights of the IRA's participant and beneficiaries because the IRA will receive the greater of $14.24 per share of Stock or the fair market value of the Stock, as determined by a qualified, independent appraiser on the date of the Sale, and will incur no commissions, costs, or other expenses as a result of the Sale.

4. James W. Francis, a CPA accredited in business valuation with Johnson, Miller Co., located in Hobbs, New Mexico, appraised the Stock on October 11, 2001, based on Internal Revenue Service pronouncements. The value was obtained by determining the price that a hypothetical willing buyer would pay a willing seller for the shares of the Stock owned by the IRA. Based upon the factors related to the valuation and approaches, methods and procedures of valuation considered and other information accumulated during the investigation and analysis, including a December 31, 1999 valuation prepared by a qualified, independent, appraiser previously hired by the Applicant, the December 31, 2000 balance sheet prepared by Bravo, and inspecting the Stock and analyzing all relevant data, Mr. Francis determined that a fee simple interest in the Stock had a fair market value of approximately $14.24 per a share as of October 11, 2001.

5. In summary, the Applicant represents that the proposed transaction satisfies the statutory criteria of section 4975(c)(2) of the Code because:

(a) The terms and conditions of the Sale would be at least as favorable to the IRA as those obtainable in an arm's length transaction with an unrelated third party;

(b) The Sale would be a one-time cash transaction allowing the IRA to divest itself of the Stock and reinvest the proceeds of the Sale in assets that will yield a higher rate of return;

(c) The IRA would receive an amount equal to the greater of $14.24 per share of the Stock, which represents the appraised fair market value of the Stock, as appraised by Mr. Francis in October 11, 2001, or the fair market value of the Stock at the time of the Sale; and

(d) The IRA would not be required to pay any commissions, costs or other expenses in connection with the Sale.

Notice to Interested Parties: Because Moran is the only participant in the IRA, it has been determined that there is no need to distribute the notice of proposed exemption (the Notice) to interested persons. Comments and requests for a hearing are due thirty (30) days after publication of the Notice in the **Federal Register**.

For Further Information Contact: Khalif Ford of the Department, telephone (202) 219–8883 (this is not a toll-free number).

Individual Retirement Account of Howard E. Adkins (the IRA) Located in Boise, Idaho

[Application No. D–11025]

Proposed Exemption

The Department is considering granting an exemption under the authority of section 4975(c)(2) of the Code and in accordance with the procedures set forth in 29 CFR Part 2570 Subpart B (55 FR 32836, 32847, August 10, 1990). If the exemption is granted, the sanctions resulting from the application of section 4975 of the Code, by reason of section 4975(c)(1)(A) through (E) of the Code, shall not apply to the proposed sale by the IRA of an interest (the Interest) in certain real property (the Property) to Moccasin, LLC (the LLC), a disqualified person with respect to the IRA,[24] provided that the following conditions are satisfied: (1) The sale is a one-time transaction for cash; (2) the IRA pays no commissions nor other expenses relating to the sale; and (3) the sales price received by the IRA equals the Interest's fair market value, as of the date of the sale, as established by a qualified, independent appraiser.

Summary of Facts and Representations

1. The IRA is an individual retirement account, as described under section 408(a) of the Code. The IRA was established by Howard E. Adkins, M.D., who is the sole participant. Dr. Adkins' wife, Ione M. Adkins, is the beneficiary of the IRA. As of September 18, 2001,

[23] Because Brenda A. Moran (the Applicant) is the only participant in the IRA, there is no jurisdiction under Title I of the Act pursuant to 29 CFR 2510.3–3(b). However, there is jurisdiction under Title II of the Act under section 4975 of the Code.

[24] Pursuant to 29 CFR 2510.3–2(d), the IRA is not an employee benefit plan within the jurisdiction of Title I of the Act. However, there is jurisdiction under Title II of the Act, pursuant to section 4975 of the code.

the IRA had total assets of approximately $651,021.00, which consisted primarily of the Interest (as valued by an independent appraisal, discussed below). The trustee of the IRA is First Security Bank of Idaho, N.A., located in Boise, Idaho.

2. Dr. Adkins and his wife are the sole managing members of the LLC, an Idaho limited liability company in which each owns 7,500 units. The LLC has no other members. The LLC, the proposed purchaser of the Interest, was formed to hold title to two real estate investment properties, which are ranches located near Salmon, Idaho. The LLC is contemplating a sale of one of the two ranches, with the proceeds to be used by the LLC to purchase the Interest from the IRA 7 in a tax-free exchange (pursuant to section 1031 of the Code).

3. The Property consists of four units of farmland in Adams County, Washington—the West Tract (Units 45 & 46) and the East Tract (Units 56 & 57). The Property was originally acquired as an investment by Dr. Adkins' individual account in the Adkins Fulwyler Pension Trust (the Trust). The Trust purchased two units of the Property in 1983 from Charles H. and Tonia L. Howarth, who are unrelated parties, for approximately $222,250. The Trust purchased two additional units in 1985 from the Prudential Insurance Company, also unrelated, for approximately $225,000. The Property and other assets were distributed from the Trust and rolled over into the IRA in December, 1995.

On July 20, 2000, Dr. Adkins turned 70½, the maximum age for a minimum required distribution (MRD) from his IRA. The applicant represents that there was insufficient cash available to make the MRD to Dr. Adkins from his IRA for the year 2000.[25] Consequently, Dr. Adkins was forced to receive some cash and a small undivided interest (nine percent) in Units 45 & 46 of the Property.[26] The applicant represents that the Property is not adjacent to any other real property owned by the Adkinses.

The Property is being rented annually to an unrelated third party for approximately $35,000.00 per year. Rental expenses include (i) a custodian charge by Wells Fargo Bank of 1% per month of the value of the Property, (ii) an onsite Property manager that receives 12% of the net rental income, (iii) taxes and water charges of approximately $18,000 per year, and (iv) miscellaneous repair and equipment purchases. The applicant further represents that the Property has not been leased to, nor used by, a disqualified person with respect to the IRA, at any time since being acquired by the IRA.[27]

4. The Property has been appraised by Columbia Appraisal and Real Estate Company, a qualified, independent appraiser located in Pasco, Washington. Robert L. Greeno, a general appraiser certified in the State of Washington, and Wendy C. Greeno, Appraisal Assistant, estimated that the fair market value of the Property was $685,700, as of September 18, 2001. Utilizing the Sales Comparison Approach, the Greenos chose three recent sales of comparable irrigated farms in Adams County, which were within a 15-mile radius of the Property, as the best indicators of the current market value of the Property. Mr. Greeno concluded that the West Tract (Units 45 & 46) consists of 148.2 irrigable acres worth $2,600 per acre for a value of $385,320, while the East Tract (Units 56 & 57) consists of 130.6 irrigable acres worth $2,300 per acre for a value of $300,380—thus, a total value for the Property of $685,700.

Subtracting the nine percent (9%) minority interest in the West Tract of the Property (*i.e.,* valued at $34,679), which is owned individually by Dr. Adkins as a result of the MRD from the IRA, Mr. Greeno concluded that the fair market value of the IRA's Interest was $651,021, as of September 18, 2001.

5. The applicant proposes that the LLC purchase the Interest from the IRA for an amount in cash equal to the fair market value of the Interest ($651,021, as of September 18, 2001), based on an updated, independent appraisal at the time of the transaction. The IRA will pay no commissions nor other expenses relating to the sale.

The applicant represents that the proposed exemption is in the best interests of the IRA because the IRA will be able to obtain a much better price for the Interest from the LLC, compared with offers it has received in past attempts to sell the Interest on the open market, and without incurring any brokerage commissions or other transaction costs. In addition, the sale will allow the IRA an opportunity to divest itself of an illiquid asset. The IRA will then be able to reinvest the sale proceeds in other investments that will increase the diversification of the IRA's assets and facilitate the payment of retirement benefits.

6. In summary, the applicant represents that the proposed transaction satisfies the statutory criteria for an exemption under section 4975(c)(2) of the Code for the following reasons:

(a) the sale will be a one-time transaction for cash; (b) the IRA will pay no commissions nor other expenses relating to the sale; (c) the sale price received by the IRA will equal the Interest's fair market value, as of the date of the sale, as established by a qualified, independent appraiser; and (d) the sale will allow the IRA an opportunity to divest itself of an illiquid asset, increase the diversification of the IRA's assets by reinvesting the proceeds of the sale in other investments, and facilitate the payment of retirement benefits.

Notice to Interested Persons: Because Dr. Adkins is the sole participant in his IRA, it has been determined that there is no need to distribute the notice of proposed exemption to interested persons. Comments and requests for a hearing with respect to the proposed exemption are due within 30 days of the date of publication of this notice in the **Federal Register**.

For Further Information Contact: Ms. Karin Weng of the Department, telephone (202) 693–8540. (This is not a toll-free number.)

General Information

The attention of interested persons is directed to the following:

(1) The fact that a transaction is the subject of an exemption under section 408(a) of the Act and/or section 4975(c)(2) of the Code does not relieve a fiduciary or other party in interest or disqualified person from certain other provisions of the Act and/or the Code, including any prohibited transaction provisions to which the exemption does not apply and the general fiduciary responsibility provisions of section 404 of the Act, which, among other things,

[25] The Department notes that the Internal Revenue Service has taken the position that a lack of diversification of investments in a qualified plan may raise questions in regard to the exclusive benefit rule under section 401(a) of the Code. See, e.g., Rev. Rul. 73–532, 1973–2 C.B. 128. The Department further notes that section 408(a) of the Code, which describes tax qualification provisions for IRAs, mandates that an IRA trust be created for the exclusive benefit of an individual and his or her beneficiaries. However, the Department expresses no opinion herein as to whether the acquisition and holding of the Property by the IRA violated any provisions of the Code.

[26] The applicant represents that the MRD for the 2000 tax year was calculated as follows. The fair market value of the total assets of the IRA on December 31, 1999 was $637,300. As of that date, the fair market value of Units 45 & 46 of the Property was equal to $346,200, while the fair market value of Units 57& 58 of the Property was equal to $291,100. The MRD for 2000 was $30,936. Thus, nine percent of Units 45 & 46 were deeded to Dr. Adkins (i.e., $346,200 × .09 = $31,158). However, the Department expresses no opinion herein as to whether the amount distributed to Dr. Adkins as the MRD satisfied the applicable provisions of the Code.

[27] The Department notes that any lease or use of the Property by a ''disqualified person,'' as defined in section 4975(e)(2) of the Code, would be a separate prohibited transaction under section 4975(c)(1)(A) or (D) of the Code.

require a fiduciary to discharge his duties respecting the plan solely in the interest of the participants and beneficiaries of the plan and in a prudent fashion in accordance with section 404(a)(1)(b) of the Act; nor does it affect the requirement of section 401(a) of the Code that the plan must operate for the exclusive benefit of the employees of the employer maintaining the plan and their beneficiaries;

(2) Before an exemption may be granted under section 408(a) of the Act and/or section 4975(c)(2) of the Code, the Department must find that the exemption is administratively feasible, in the interests of the plan and of its participants and beneficiaries, and protective of the rights of participants and beneficiaries of the plan;

(3) The proposed exemptions, if granted, will be supplemental to, and not in derogation of, any other provisions of the Act and/or the Code, including statutory or administrative exemptions and transitional rules. Furthermore, the fact that a transaction is subject to an administrative or statutory exemption is not dispositive of whether the transaction is in fact a prohibited transaction; and

(4) The proposed exemptions, if granted, will be subject to the express condition that the material facts and representations contained in each application are true and complete, and that each application accurately describes all material terms of the transaction which is the subject of the exemption.

Signed at Washington, DC, this 6th day of December, 2001.

Ivan Strasfeld,

Director of Exemption Determinations, Pension and Welfare Benefits, Administration, Department of Labor.

[FR Doc. 01–30755 Filed 12–12–01; 8:45 am]

BILLING CODE 4510–29–P

NUCLEAR REGULATORY COMMISSION

[Docket No. 50–416]

Entergy Operations, Inc.; Grand Gulf Nuclear Station, Unit 1 Environmental Assessment and Finding of No Significant Impact

The U.S. Nuclear Regulatory Commission (NRC) is considering issuance of an exemption from Title 10 of the *Code of Federal Regulations* (10 CFR) part 50, appendix E IV.F.2.b and c for Facility Operating License No. NPF–29, issued to Entergy Operations, Inc., the licensee, for operation of the Grand Gulf Nuclear Station (GGNS), Unit 1, located in Claiborne County, Mississippi. Therefore, as required by 10 CFR 51.21, the NRC is issuing this environmental assessment and finding of no significant impact.

Environmental Assessment

Identification of the Proposed Action

The proposed action is a one time exemption from the requirements of 10 CFR part 50, appendix E, sections IV.F.2.b and c regarding conduct of a full participation exercise of the onsite and offsite emergency plans every 2 years. Under the proposed exemption, the licensee would reschedule the exercise originally scheduled for September 19, 2001, and complete the exercise requirements during the week of March 4, 2002.

The proposed action is in accordance with the licensee's application for an exemption dated September 18, 2001, supplemented by letter dated December 3, 2001.

The Need for the Proposed Action

10 CFR part 50, Appendix E, Items IV.F.2.b and c requires each licensee at each site to conduct an exercise of its onsite and offsite emergency plan every 2 years. Federal agencies (the NRC for the onsite exercise portion and the Federal Emergency Management Agency (FEMA) for the offsite exercise portion) observe these exercises and evaluate the performance of the licensee, State and local authorities having a role under the emergency plan.

The licensee had initially planned to conduct an exercise of its onsite and offsite emergency plan on September 19, 2001, within the required 2-year interval. However, due to circumstances resulting from the national tragedy of September 11, 2001, the licensee was concerned that the performance of an Emergency Plan Exercise, including full participation of offsite authorities, would result in undue stress and risk to the general public and to plant personnel. Based on the concerns created by this extraordinary event, the licensee has decided to postpone the exercise.

Environmental Impacts of the Proposed Action

The NRC has completed its evaluation of the proposed action and concludes that the proposed action involves an administrative activity (a scheduler change in conducting an exercise) unrelated to plant operations.

The proposed action will not increase the probability or consequences of accidents, no changes are being made in the types of any effluents that may be released offsite, and there is no significant increase in occupational or public radiation exposure. Therefore, there are no significant radiological environmental impacts associated with the proposed action.

With regard to potential non-radiological impacts, the proposed action does not involve any historic sites. It does not affect non-radiological plant effluents and has no other environmental impact. Therefore, there are no significant non-radiological environmental impacts associated with the proposed action.

Accordingly, the NRC concludes that there are no significant environmental impacts associated with the proposed action.

Environmental Impacts of the Alternatives to the Proposed Action

As an alternative to the proposed action, the staff considered denial of the proposed action (*i.e.*, the ''no-action'' alternative). Denial of the application would result in no change in current environmental impacts. The environmental impacts of the proposed action and the alternative action are similar.

Alternative Use of Resources

This action does not involve the use of any resources not previously considered in the Final Environmental Statement for the GGNS.

Agencies and Persons Consulted

On October 5, 2001, the staff consulted with the Mississippi State official, Robert W. Goff of the Mississippi Department of Health, regarding the environmental impact of the proposed action. The State official had no comments. In addition, by telephone conference on September 20, 2001, the FEMA indicated support for a one-time rescheduling of the Emergency Plan exercise from September 19, 2001, to a date during calendar year 2002.

Finding of No Significant Impact

On the basis of the environmental assessment, the NRC concludes that the proposed action will not have a significant effect on the quality of the human environment. Accordingly, the NRC has determined not to prepare an environmental impact statement for the proposed action.

For further details with respect to the proposed action, see the licensee's letters dated September 18, and December 3, 2001. Documents may be examined, and/or copied for a fee, at the NRC's Public Document Room (PDR), located at One White Flint North, 11555 Rockville Pike (first floor), Rockville,

Maryland. Publicly available records will be accessible electronically from the ADAMS Public Library component on the NRC Web site, *http://www.nrc.gov* (the Public Electronic Reading Room). Persons who do not have access to ADAMS or who encounter problems in accessing the documents located in ADAMS should contact the NRC PDR Reference staff by telephone at 1–800–397–4209, or 301–415–4737, or by e-mail at *pdr@nrc.gov*.

Dated at Rockville, Maryland, this 7th day of December, 2001.

For the Nuclear Regulatory Commission.

Robert A. Gramm,

Chief, Section 1, Project Directorate IV, Division of Licensing Project Management, Office of Nuclear Reactor Regulation.

[FR Doc. 01–30833 Filed 12–12–01; 8:45 am]

BILLING CODE 7590–01–P

SECURITIES AND EXCHANGE COMMISSION

[Rel. No. IC–25312; File No. 812–12280]

Nationwide Life Insurance Company, et al.; Notice

December 7, 2001.

AGENCY: Securities and Exchange Commission (''Commission'').

ACTION: Notice of application for an order pursuant to section 26(c) of the Investment Company Act of 1940 (''1940 Act'').

Applicants: Nationwide Life Insurance Company (''Nationwide''); Nationwide Variable Account-4 (the ''Separate Account''); and Salomon Smith Barney (''SSB'') (all collectively, the ''Applicants'').

Summary of the Application: Applicants seek an order pursuant to section 26(c) of the 1940 Act to permit the substitution of shares of the Smith Barney Variable Account Funds—Income and Growth Portfolio and the Smith Barney Variable Account Funds—Reserve Account Portfolio (collectively, the ''Existing Funds''), with shares of the Travelers Series Fund, Inc.—Smith Barney Large Cap Value Portfolio and the Travelers Series Fund, Inc.—Smith Barney Money Market Portfolio, respectively, (collectively, the ''Replacement Funds'').

Filing Date: The Application was filed on September 28, 2000, and amended on December 5, 2001.

Hearing or Notification of Hearing: An Order granting the Application will be issued unless the Commission orders a hearing. Interested persons may request a hearing by writing to the Secretary of the Commission and serving Applicants with a copy of the request, personally or by mail. Hearing requests should be received by the Commission by 5:30 p.m. on December 28, 2001, and should be accompanied by proof of service on Applicants in the form of an affidavit, or, for lawyers, a certificate of service. Hearing requests should state the nature of the requester's interest, the reason for the request, and the issues contested. Persons may request notification of a hearing by writing to the Secretary of the Commission.

ADDRESSES: Secretary, Securities and Exchange Commission, 450 Fifth Street NW., Washington, DC 20549–0609. Applicants, Jamie Casto, Nationwide Life Insurance Company, One Nationwide Plaza 1–09–V3, Columbus, Ohio 43215.

FOR FURTHER INFORMATION CONTACT: Martha Atkins, Attorney, at (202) 942–0668, or Keith Carpenter, Branch Chief, at (202) 942–0679, Office of Insurance Products, Division of Investment Management.

SUPPLEMENTARY INFORMATION: The following is a summary of the Application. The complete Application is available for a fee from the Public Reference Branch of the Commission, 450 Fifth Street, NW., Washington, DC 20549–0102 (tel. (202) 942–8090).

Applicants' Representations

1. Nationwide is a stock life insurance company organized under the laws of the State of Ohio. Nationwide is wholly owned by Nationwide Financial Services, Inc. (''NFS''). NFS, a Delaware corporation, is a publicly traded holding company with two classes of common stock outstanding, each with different voting rights. This enables Nationwide Corporation (the holder of all the outstanding Class B Common Stock) to control NFS. Nationwide Corporation stock is held by Nationwide Mutual Insurance Company (95.24%) and Nationwide Mutual Fire Insurance Company (4.76%), the ultimate controllers of Nationwide.

2. The Separate Account was established on October 7, 1987 by Nationwide for the purpose of funding variable annuity contracts. The Separate Account is registered under the 1940 Act as a unit investment trust (File No. 811–5701). The Separate Account supports two deferred variable annuity contracts (collectively, the ''contracts'') that are registered under the Securities Act of 1933 (''1933 Act'') (File Nos. 33–25734 and 33–26454).

3. The Separate Account maintains separate sub-accounts for each underlying mutual fund available under the contracts. Contract owners may currently choose to have purchase payments allocated to one or more sub-accounts which invest in the following underlying mutual funds:

Federated Insurance Series, Federated Quality Bond Fund II

Greenwich Street Series Fund, Intermediate High Grade Portfolio, Total Return Portfolio

Smith Barney Variable Account Funds, Income and Growth Portfolio, Reserve Account Portfolio, U.S. Government/High Quality Securities Portfolio

Travelers Series Fund, Inc., Smith Barney Large Cap Value Portfolio, Smith Barney International Equity Portfolio, Smith Barney Money Market Portfolio

4. The prospectus portion of the registration statements for the contracts contain provisions stipulating Nationwide's right to substitute shares of one underlying mutual fund for shares of another underlying mutual fund already purchased or to be purchased in the future with purchase payments or premiums made under the contracts in the event that: (i) The underlying mutual fund options currently available under the contracts are no longer available for investment by the Separate Account; or (ii) in the judgment of Nationwide's management, further investment in such underlying mutual fund shares is inappropriate in view of the purposes of the contracts.

5. Applicants seek an Order pursuant to section 26(c) of the 1940 Act to permit the substitution of shares of the Replacement Funds in Column B for shares of the Existing Funds in Column A in the following table.

Column A, existing funds	Column B, replacement funds
Smith Barney Variable Account Funds—Income and Growth Portfolio ...	Travelers Series Fund, Inc.—Smith Barney Large Cap Value Variable Portfolio.
Smith Barney Variable Account Funds—Reserve Account Portfolio	Travelers Series Fund, Inc.—Smith Barney Money Market Portfolio.

6. Each of the Existing Funds and Replacement Funds is part of an open-end, diversified management investment company established to fund benefits under variable life insurance policies and variable annuity contracts.

7. Nationwide is not affiliated with any of the Replacement Funds, nor is Nationwide affiliated with the adviser to the Replacement Funds (SSB Citi Fund Management LLC).

8. Salomon Smith Barney Inc. (''SSB''), which serves as general distributor-principal underwriter of the contracts issued by the Separate Account, is affiliated with the adviser to the Existing Funds and the Replacement Funds (SSB Citi Fund Management LLC).

9. Information about the Existing Funds and Replacement Funds, in addition to the rationale for each replacement proposed is provided below.

10. Smith Barney Variable Account Funds—Income and Growth Portfolio to be replaced with Travelers Series Fund, Inc.—Smith Barney Large Cap Value Portfolio.

Existing fund	Replacement fund
Smith Barney Variable Account Funds, Smith Barney Variable Account Funds was organized as a Massachusetts business trust on December 18, 1986, is an open-end, diversified, management investment company. Smith Barney Variable Account Funds is managed by SSB Citi Fund Management LLC, a subsidiary of Citigroup.	*Travelers Series Fund Inc.,* Travelers Series Fund Inc. was incorporated in Maryland on February 22, 1994, and is an open-end, diversified, management investment company. Travelers Series Fund, Inc. is managed by SSB Citi Fund Management LLC, a subsidiary of Citigroup Inc.
The Income and Growth Portfolio, Investment Objective: To seek current income and long-term growth of income and capital by investing primarily in common stocks. Specifically, the Portfolio invests primarily in common stocks of U.S. companies having market capitalizations of at least $5 billion at the time of investment.	*Smith Barney Large Cap Value Portfolio,* Investment Objective: To seek current income and long-term growth of income and capital by investing primarily in common stocks. Specifically, the Portfolio invests primarily in common stocks of U.S. companies having market capitalizations of at least $5 billion at the time of investment.

	Existing fund—Smith Barney variable account funds—income and growth portfolio (percent)	Replacement fund—Travelers Series Fund, Inc.,—Smith Barney large cap value portfolio (percent)
Adviser	SSB Citi Fund Management LLC	SSB Citi Fund Management LLC
Subadviser	N/A	N/A
With reimbursements/waivers (as of 07/01/01):		
Management fees	0.59	0.65
Other expenses	0.41	0.02
12b–1 fees	0.00	0.00
Total expenses	1.00	0.67
Without reimbursements/waivers (as of 07/01/01):		
Management fees	0.60	0.65
Other Expenses	0.41	0.02
12b–1 fees	0.00	0.00
Total expenses	1.01	0.67

Specific asset and performance information as of 07/01/01 is as follows (performance represents average annual total returns):

	Existing fund—Smith Barney variable account funds—income and growth portfolio	Replacement fund—Travelers Series Fund, Inc.—Smith Barney large cap value portfolio
Inception Date	July 1989	June 1994
Fund Assets	$7,654,000	$573,337,000
1 Year	9.43%	11.15%
3 Year	2.33%	2.86%
5 Year	11.27%	10.89%
Inception to 07/01/01	11.64%	13.21%

11. Smith Barney Variable Account Funds and Travelers Series Fund Inc., are affiliates, each supporting different distribution channels. Accordingly, both trusts use the same investment adviser, SSB Citi Fund Management LLC (''SSB Citi Fund''). Nationwide is the primary shareholder (approximately 95%) in the Smith Barney Variable Account Funds—Income and Growth Portfolio. SSB Citi Fund has informed Nationwide that it wishes to terminate operation of the Smith Barney Variable Account Funds, including the Income and Growth Portfolio, and that upon moving all assets out of the Smith Barney Variable Account Funds, it will file a form N–8F, Application for Deregistration of Certain Registered Investment Companies.

12. Applicants propose to move the assets currently located in the Smith Barney Variable Account Funds—Income and Growth Portfolio into the Travelers Series Fund, Inc.—Smith Barney Large Cap Value Portfolio. The proposed substitution will enable SSB Citi Fund to liquidate the Smith Barney Variable Account Funds by moving the assets located in the Income and Growth Portfolio to a comparable fund of an affiliate, Travelers Series Fund Inc. Both funds have the same investment manager (SSB Citi Fund), the same investment objective (current income and long-term growth of income and capital), and comparable short- and long-term performance. Additionally, the expenses associated with the replacement fund are 33 basis points lower than the expenses of the existing fund.

13. Assets in the Travelers Series Fund, Inc.—Smith Barney Large Cap Value Portfolio are substantially larger and more actively managed, making it more likely that it will meet its stated investment objectives while maintaining lower expenses to the contract owners as compared to the Smith Barney Variable Account Funds—Income and Growth Portfolio.

14. Neither Nationwide nor any of its affiliates currently receives, and will not receive for a period of three years from the date of the Order requested herein, any direct or indirect benefit from the Travelers Series Fund, Inc.—Smith Barney Large Cap Value Portfolio, its adviser, and/or the adviser's affiliates, including, without limitation, 12b–1, shareholder service, administrative or other service fees, revenue sharing or other arrangement, either with specific reference to the Travelers Series Fund, Inc.—Smith Barney Large Cap Value Portfolio or as part of an overall business arrangement.

15. The proposed substitution would enable investors to enjoy the economies of scale associated with a larger fund, without changing the investment objective or fund manager originally contemplated when allocations were originally made to the Smith Barney Variable Account Funds—Income and Growth Portfolio. Furthermore, the underlying mutual fund expenses would decrease. Consequently, it is believed that by substituting assets out of the Smith Barney Variable Account Funds—Income and Growth Portfolio and into the Travelers Series Fund, Inc.—Smith Barney Large Cap Value Portfolio, contract owners will be better served.

16. Smith Barney Variable Account Funds—Reserve Account Portfolio to be replaced with Travelers Series Fund, Inc.—Smith Barney Money Market Portfolio.

Existing fund	Replacement fund
Smith Barney Variable Account Funds Smith Barney Variable Account Funds was organized as a Massachusetts business trust on December 18, 1986, and is an open-end, diversified, management investment company. Smith Barney Variable Account Funds is managed by SSB Citi Fund Management LLC, a subsidiary of Citigroup.	*Travelers Series Fund Inc.* Travelers Series Fund Inc. was incorporated in Maryland on February 22, 1994, and is an open-end, diversified, management investment company. Travelers Series Fund, Inc. is managed by SSB Citi Fund Management LLC, a subsidiary of Citigroup Inc.
The Reserve Account Portfolio Investment Objective: To seek current income by investing exclusively in money market instruments and other high quality fixed income obligations with limited maturities. Currently, the Portfolio has insufficient assets to invest in accordance with the above stated investment objective. Consequently, assets in the Portfolio are actually being invested in repurchase agreements and U.S. treasury bills.	*Smith Barney Money Market Portfolio* Investment Objective: To seek maximum current income consistent with preservation of capital. The Portfolio seeks to maintain a stable $1 share price. The Portfolio invests in high quality U.S. dollar denominated short term debt securities, including commercial paper, corporate and municipal obligations, obligations of U.S. and foreign banks, securities of the U.S. government, its agencies or instrumentalities and related repurchase agreements.

	Existing fund—Smith Barney variable account funds—reserve account portfolio (percent)	Replacement fund—Travelers Series Fund, Inc.—Smith Barney money market portfolio (percent)
Adviser	SSB Citi Fund Management LLC	SSB Citi Fund Management LLC
Subadviser	N/A	N/A
With reimbursements/waivers (as of 07/01/01):		
Management Fees	0.00	0.50
Other Expenses	1.00	0.03
12b–1 Fees	0.00	0.00
Total Expenses	1.00	0.53
Without reimbursements/waivers (as of 07/01/01):		
Management Fees	0.45	0.50
Other Expenses	86.14	0.03
12b–1 Fees	0.00	0.00
Total Expenses	86.59	0.53

Specific asset and performance information as of 07/01/01 is as follows (performance represents average annual total returns):

	Existing fund—Smith Barney variable account funds—reserve account portfolio	Replacement fund—Travelers Series Fund, Inc.—Smith Barney money market portfolio
Inception Date	August 1989	June 1994
Fund Assets	$26,915	$471,084,000
1 Year	4.49%	5.59%
3 Year	3.30%	5.24%
5 Year	2.13%	5.16%
Inception to 07/01/01	4.54%	5.14%

17. Smith Barney Variable Account Funds and Travelers Series Fund Inc. are affiliates, each supporting different distribution channels. Accordingly, both trusts use the same investment adviser, SSB Citi Fund Management LLC (''SSB Citi Fund''). Nationwide is the primary shareholder (approximately 85%) in the Smith Barney Variable Account Funds—Reserve Account Portfolio. SSB Citi Fund has informed Nationwide that it wishes to terminate operation of the Smith Barney Variable Account Funds, including the Reserve Account Portfolio, and that upon moving all assets out of the Smith Barney Variable Account Funds, it will file a form N–8F, Application for Deregistration of Certain Registered Investment Companies.

18. Applicants propose to move the assets currently located in the Smith Barney Variable Account Funds—Reserve Account Portfolio into the Travelers Series Fund, Inc.—Smith Barney Money Market Portfolio. The proposed substitution will enable SSB Citi Fund to liquidate the Smith Barney Variable Account Funds by moving the assets located in the Reserve Account Portfolio to a comparable fund of an affiliate, Travelers Series Fund Inc. Both funds have the same investment manager (SSB Citi Fund) and similar investment objectives (current income). Furthermore, the replacement fund has slightly better performance, both in the short and long term.

19. As reflected in the Reserve Account Portfolio's prospectus, this fund currently has insufficient assets to invest in accordance with the stated fund objective. Furthermore, the total expenses associated with this fund, prior to reimbursements and waivers, is 86.59%. Taking into account the reimbursements and waivers, total expenses are 1.00%, still 47 basis points higher than the replacement fund. Although performance of the Smith Barney Variable Account Funds—Reserve Account Portfolio is comparable to, although slightly lower than, the replacement fund, it is unlikely that such performance would have been sustained had the existing fund not waived such a large portion of their actual expenses. Furthermore, the fact that such a large portion of the existing fund's expenses are not being recouped further jeopardizes the existing fund's ability to maintain assets. This depletion of assets only further undermines the fund's ability to invest according to the stated fund objectives.

20. Assets in the Travelers Series Fund, Inc.—Smith Barney Money Market Portfolio are substantially larger and more actively managed, making it more likely that it will meet its stated investment objectives while maintaining lower expenses as compared to the Reserve Account Portfolio. Furthermore, as stated previously, SSB Citi Fund has indicated that the assets in the Smith Barney Variable Account Funds—Reserve Account Portfolio are insufficient to invest according to the stated investment objective.

21. Neither Nationwide nor any of its affiliates currently receives, and will not receive for a period of three years from the date of the Order requested herein, any direct or indirect benefit from the Travelers Series Fund, Inc.—Smith Barney Money Market Portfolio, its adviser, and/or the adviser's affiliates, including, without limitation, 12b–1, shareholder service, administrative or other service fees, revenue sharing or other arrangement, either with specific reference to the Travelers Series Fund, Inc.—Smith Barney Money Market Portfolio or as part of an overall business arrangement.

22. The proposed substitution would enable investors to have their allocations invested as originally intended, without changing the fund manager or incurring increased expenses. Therefore, by substituting assets out of the Smith Barney Variable Account Funds—Reserve Account Portfolio and into the Travelers Series Fund, Inc.—Smith Barney Money Market Portfolio, it is believed that contract owners will be more likely to achieve their original investment objective while being better served.

23. Applicants represent that the investment objectives of the Existing Funds and corresponding Replacement Funds are closely comparable. When viewed in the context of the wide spectrum (most conservative to most aggressive) of investment objectives reflected in contemporary mutual fund offerings, the Existing Funds and corresponding Replacement Funds are closely comparable.

24. For these reasons, Applicants assert that the substitution of the Replacement Funds for the Existing Funds will not create circumstances in which contract owners will be forced to surrender their contracts and purchase alternative investments (incurring deferred sales charges on the contracts or new sales charges on new investments) in order to maintain an investment strategy contemplated when making their original purchase.

25. Applicants state that the proposed substitution will take place on a date designated by Nationwide (the ''Exchange Date''). In addition, the Applicants state that the proposed substitution will occur at the relative net asset values of the Replacement Funds and the Existing Funds on the Exchange Date and that no charges will be assessed in connection with the substitution transaction. Nationwide will bear all of the costs (including legal, accounting, brokerage, and other expenses) associated with the substitution. Accordingly, contract owners' contract values will not be affected in any way by the substitution. The proposed substitution will not impose any tax liability on contract owners and will not cause the fees and charges currently being paid by existing contract owners to be greater after the proposed substitution than before the proposed substitution. Applicants also represent that the proposed substitution will not be treated as a transfer for the purposes of transfer limitations. Nationwide has informed contract owners that it will not exercise any rights it may have under the contracts to impose restrictions on transfers or eliminate the transfer privilege under the contracts from the date contract owners are informed of the Exchange

Date until at least thirty (30) days following the substitution.

26. Existing and prospective contract owners have been provided with current prospectuses for the Replacement Funds.

27. Contract owners will be notified of the impending Exchange Date. Contract owners with interests remaining in the Existing Funds will be advised that the Existing Funds will be replaced with the Replacement Funds on the Exchange Date. Contract owners will be given notice prior to the substitutions and will have thirty (30) days after the Exchange Date to reallocate unit values among other sub-accounts without imposition of any transfer charge or limitation, or the transfer counting against any limit on the number of transfers each year. All necessary forms and other information necessary for contract owners to effectuate exchanges among investment options will continue to be provided.

28. On the Exchange Date, all shares held by the Separate Account in the Existing Funds will be redeemed in cash, resulting in a complete liquidation of the sub-accounts. Contemporaneously with this redemption, cash proceeds received from the Existing Funds will be used to purchase shares in the corresponding Replacement Funds. All shares will be purchased and redeemed at prices based on the current net asset value per share next computed after receipt of the redemption request and in a manner consistent with Rule 22c–1 under the 1940 Act.

29. Nationwide asserts that it is likely that unit values (which include both accumulation unit values and annuity unit values) of the Existing Funds and the Replacement Funds will be different on the Exchange Date. In order to keep each contract owner's contract value the same after the Exchange Date as immediately prior to the Exchange Date, the number of units held by beneficial shareholders in the Existing Funds are likely to be different than the number of units held by beneficial shareholders in the corresponding Replacement Funds when the exchange takes place.

30. Within five (5) days of the Exchange Date, all contract owners affected by the transaction will receive a written confirmation of the transaction in accordance with Rule 10b–10 under the Securities Exchange Act of 1934. The confirmation will state that contract owners may transfer all cash value under an annuity contract in the affected sub-accounts to any other available sub-accounts. The notice will also reiterate that Nationwide will not exercise any right reserved by it under the contracts to impose any restrictions or fees on transfers until at least thirty (30) days after the Exchange Date.

Applicants' Legal Analysis

1. Section 26(c) of the 1940 Act requires the depositor or trustee of a registered unit investment trust holding the securities of a single issuer to obtain Commission approval before substituting securities held by the trust. The section further provides that the Commission shall issue an order approving such substitution if the evidence establishes that the substitution is consistent with the protection of investors and the purposes fairly intended by the policy and provisions of the 1940 Act.

2. Applicants represent that the proposed substitution, in accordance with the standards set forth under section 26(c) of the 1940 Act, is in the best interest of contract owners. With respect to management and fund objectives, the Replacement Funds, as has been demonstrated, are closely comparable to the corresponding Existing Fund. Accordingly, the proposed substitution should not create incentives for contract owners to surrender contracts and seek out other investment opportunities (incurring additional sales charges) in order to maintain a desired investment strategy. On the contrary, the close comparability of the funds proposed as a substitute for the Existing Funds ensures that investment strategies currently employed by contract owners may be maintained after the substitution.

3. Each of the Replacement Funds currently has greater assets than the Existing Fund being substituted into it. This will create the opportunity for better performance between the Existing Funds and Replacement Funds, which have similar management and investment objectives. The benefits of economies of scale will be passed to contract owners.

4. The Applicants maintain that the substitutions will not result in the type of costly forced redemption that section 26(c) was intended to guard against and, for the following reasons, are consistent with the protection of investors and the purposes fairly intended by the 1940 Act:

a. Each Replacement Fund has investment objectives that are similar to those of the corresponding Existing Fund, and permits contract owners continuity of their investment objectives and expectations;

b. The costs of the substitutions, including any brokerage costs, will be borne by Nationwide and will not be borne by contract owners and no charges will be assessed to effect the substitutions.

c. The substitutions will be effected at the net asset value of the respective sub-accounts of the Existing Funds and Replacements Funds in conformity with section 22(c) of the 1940 Act and Rule 22c-1 thereunder, without the imposition of any transfer or similar charge by Applicants, and with no change in the amount of any contract owner's contract value or in the dollar value of his or her investment in such contract.

d. The substitutions will not cause the fees and charges under the contracts currently being paid by contract owners to be greater after the substitutions than before the substitutions.

e. The contract owners will be given notice prior to the substitutions and will have an opportunity to reallocate unit values among other sub-accounts without imposition of any transfer charge or limitation, or the transfer counting against any limit on the number of transfers each year, for thirty (30) days after the Exchange Date.

f. Within five (5) days after the substitutions, Nationwide will send to the affected contract owners written confirmation that the substitutions have occurred.

g. The substitutions will in no way alter the insurance benefits to contract owners or the contractual obligations of Nationwide.

h. The substitutions will have no adverse tax consequences to contract owners and will in no way alter the tax benefits to contract owners.

5. Applicants assert, for the reasons stated above, that the proposed substitution is consistent with the protection of investors and the purposes fairly intended by the policy and provisions of the 1940 Act and the requested Order approving the substitution should be granted.

For the Commission, by the Division of Investment Management, pursuant to delegated authority.

Margaret H. McFarland,

Deputy Secretary.

[FR Doc. 01–30808 Filed 12–12–01; 8:45 am]

BILLING CODE 8010–01–P

SECURITIES AND EXCHANGE COMMISSION

[Release No. IC–25313; File No. 812–12616]

United Investors Life Insurance Company, *et al.*

December 7, 2001.

AGENCY: Securities and Exchange Commission (the ''Commission'').

ACTION: Notice of an application for an Order of Approval pursuant to section 26(c) of the Investment Company Act of 1940, as amended (the ''Act'').

Applicants: United Investors Life Insurance Company (''United Investors''), Titanium Annuity Variable Account of United Investors Life Insurance Company (''Annuity Account''), and Titanium Universal Life Variable Account of United Investors Life Insurance Company (''Life Account''), (all collectively, the ''Applicants'').

Summary of Application: Applicants seek an order of the Commission, pursuant to section 26(c) of the Act, approving the substitution of shares of the AIM V.I. Capital Appreciation Fund portfolio of the AIM Variable Insurance Funds for shares of the Strong Discovery Fund II portfolio of the Strong Variable Insurance Funds, Inc. held by the Annuity Account and Life Account (together, the ''Accounts'') to support variable annuity and life insurance policies issued by United Investors.

Filing Date: The application was filed on August 28, 2001 and amended and restated on December 3, 2001 and on December 7, 2001.

Hearing or Notification of Hearing: An order granting the application will be issued unless the Commission orders a hearing. Interested persons may request a hearing by writing to the Secretary of the Commission and serving Applicants with a copy of the request, personally or by mail. Hearing requests must be received by the Commission by 5:30 p.m. on December 28, 2001, and should be accompanied by proof of service on Applicants in the form of an affidavit or, for lawyers, a certificate of service. Hearing requests should state the nature of the requester's interest, the reason for the request, and the issues contested. Persons may request notification of a hearing by writing to the Secretary of the Commission.

ADDRESSES: Secretary, Commission, 450 Fifth Street NW, Washington, DC 20549–0609. Applicants, c/o John H. Livingston, Esq., United Investors Life Insurance Company, 2001 Third Avenue South, Birmingham, Alabama 35233. Copies to Frederick R. Bellamy, Esq., Sutherland Asbill & Brennan LLP, 1275 Pennsylvania Avenue, NW, Washington, DC 20004–2415.

FOR FURTHER INFORMATION CONTACT: Kenneth C. Fang, Attorney, or Keith E. Carpenter, Branch Chief, at (202) 942–0670, Office of Insurance Products, Division of Investment Management.

SUPPLEMENTARY INFORMATION: The following is a summary of the application. The complete application may be obtained for a fee from the Public Reference Branch of the Commission, 450 Fifth Street, NW, Washington, DC 20549–0102 (tel. (202) 942–8090).

Applicants' Representations

1. United Investors is a stock life insurance company originally incorporated under the laws of Missouri on August 17, 1981, as a successor to a company of the same name established in Missouri on September 27, 1961. United Investors is engaged in the sale of life insurance and annuity products and is admitted to do business in the District of Columbia and all states except New York. United Investors is an indirect subsidiary of Torchmark Corporation, a publicly traded life insurance and diversified financial services company. For purposes of the Act, United Investors is the depositor and sponsor of the Annuity Account and the Life Account, as those terms have been interpreted by the Commission, with respect to variable annuity and variable life separate accounts.

2. United Investors established the Annuity Account on September 15, 1999 as a segregated investment account under Missouri law. Under Missouri law, the assets of the Annuity Account are owned by United Investors but are held separately from all other assets of United Investors for the benefit of the owners of, and the persons entitled to payment under, the variable annuity policies. Assets in the Annuity Account attributable to the policy values are not chargeable with liabilities arising out of any other business that United Investors may conduct. The Annuity Account currently has 32 subaccounts, each of which invests in shares of a single mutual fund portfolio. Income, if any, and gains and losses, realized or unrealized, arising from the assets of each subaccount shall be credited to or charged against the amounts allocated to that subaccount without regard to the income, gains or losses of any other subaccount or any other business of United Investors. The Annuity Account is a ''separate account'' as defined by Rule 0–1(e) under the Act, and is registered with the Commission as a unit investment trust (File No. 811–10035). The variable annuity policies have been registered as securities under the Securities Act of 1933, as amended (the ''1933 Act'') on Form N–4 (File No. 333–43022).

3. United Investors established the Life Account on September 15, 1999 as a segregated investment account under Missouri law. Under Missouri law, the assets of the Life Account are owned by United Investors but are held separately from all other assets of United Investors for the benefit of the owners of, and the persons entitled to payment under, the variable life policies. Assets in the Life Account attributable to the variable life policy values are not chargeable with liabilities arising out of any other business that United Investors may conduct. The Life Account currently has 32 subaccounts, each of which invests in shares of a single mutual fund portfolio. Income, if any, and gains and losses, realized or unrealized, arising from the assets of each subaccount shall be credited to or charged against the amounts allocated to that subaccount without regard to the income, gains or losses of any other subaccount or any other business of United Investors. The Life Account is a ''separate account'' as defined by Rule 0–1(e) under the Act, and is registered with the Commission as a unit investment trust (File No. 811–09657). The variable life policies have been registered as securities under the 1933 Act on Form S–6 (File No. 333–89875).

4. Strong Variable Insurance Funds, Inc. (the ''Strong Fund'') is a series investment company as defined by Rule 18f-2 under the Act and is registered under the Act as an open-end management investment company (File No. 811–6553). The Strong Fund issues a separate series of shares of stock in connection with each series and has registered these shares under the 1933 Act on Form N–1A (File No. 33–45321). Strong Fund Capital Management, Inc. serves as investment adviser to the Strong Funds. One of the subaccounts of each of the Annuity Account and the Life Account invests in shares of the Strong Discovery Fund II (''Discovery Fund'').

5. The Discovery Fund seeks capital growth. The Discovery Fund's May 1, 2001 prospectus explains its principal investment strategies as follows:

> The Discovery Fund II invests, under normal conditions, in securities that its manager believes offer attractive opportunities for growth. The fund usually invests in a diversified portfolio of common stocks from small-, medium-, and large-capitalization companies. These are chosen through a combination of in-depth fundamental analysis of a company's financial reports and direct, on-site research during company visits. When the manager believes market conditions favor fixed-income investments, the manager has the flexibility to invest a significant portion of the fund's assets in bonds. The fund would primarily invest in intermediate- and long-term investment grade bonds. To a limited extent, the fund may also invest in foreign securities. The manager may sell a holding if

its growth potential or fundamental qualities change. The fund's active trading approach may increase the fund's costs, which may reduce the fund's performance. The fund's active trading approach may also increase the amount of capital gains tax that you pay on the fund's returns.

The manager may invest without limitation in cash or cash-type securities (high-quality, short-term debt securities issued by corporations, financial institutions, the U.S. government, or foreign governments) as a temporary defensive position during adverse market, economic, or political conditions if the fund's manager determines that a temporary defensive position is advisable. This could reduce the benefit to the fund if the market goes up. In this case, the fund may not achieve its investment goals.

6. AIM Variable Insurance Funds (''AIM Fund'') is a series investment company as defined by Rule 18f–2 under the Act and is registered under the Act as an open-end diversified management investment company (File No. 811–7452). The AIM Fund issues a separate series of shares of beneficial interest in connection with each series and has registered these shares under the 1933 Act on Form N–1A (File No. 33–57340). A I M Advisors, Inc. serves as investment adviser to the AIM Fund. One of the subaccounts of each of the Annuity Account and the Life Account invests in the AIM V.I. Capital Appreciation Fund Series I shares (''AIM Capital Appreciation Fund''). United Investors is not affiliated with the AIM Fund or A I M Advisors, Inc., except to the extent that it might be an ''affiliated person'' of the AIM Fund solely by record ownership of more than 5% of a class of shares of the AIM Fund (*i.e.,* ownership of shares held in the Accounts for the benefit of policy owners).

7. The AIM Capital Appreciation Fund's investment objective is growth of capital. The AIM Capital Appreciation Fund's May 1, 2001 prospectus explains its principal investment strategies as follows:

The fund seeks to meet its objective by investing principally in common stocks of companies the portfolio managers believe are likely to benefit from new or innovative products, services or processes as well as those that have experienced above-average, long-term growth in earnings and have excellent prospects for future growth. The portfolio managers consider whether to sell a particular security when any of those factors materially changes. The fund may also invest up to 25% of its total assets in foreign securities.

In anticipation of or response to adverse market conditions, for cash management purposes, or for defensive purposes, the fund may temporarily hold all or a portion of its assets in cash, money market instruments, shares of affiliated money market funds, bonds or other debt securities. As a result, the fund may not achieve its investment objective.

8. The policies are individual and group flexible premium variable life and deferred variable annuity policies. The variable annuity policies provide for the accumulation of values on a variable basis, fixed basis, or both, during the accumulation period, and for settlement or annuity payment options on a variable basis, fixed basis, or both. The variable life insurance policies provide for the accumulation of values on a variable basis, fixed basis, or both and for death benefit options and other life insurance features. Under the policies and as disclosed in the prospectuses, United Investors reserves the right to substitute shares of one fund for shares of another, including a fund of a different management investment company.

9. A policy owner may transfer all or part of the policy value from one subaccount to another or the fixed account, up to twelve times per year free of charge (for the annuity policies, before the annuity benefit date). Owners of variable annuities may transfer policy value once per year after the annuity benefit date. Each transfer must be for at least $100 or, if less, the entire subaccount value. United Investors charges $25 per transfer for each additional transfer after twelve per year.

10. United Investors, on its behalf and on behalf of the Accounts, proposes to substitute shares of the AIM Capital Appreciation Fund for shares of the Discovery Fund. Applicants believe that by making the proposed substitution, they can better serve the interests of the policy owners.

11. On April 5, 2001, the board of directors of the Strong Fund (the ''Board'') voted to close the Discovery Fund to new separate account investors effective April 6, 2001. Subsequently, on June 1, 2001, Strong Capital Management, Inc. notified United Investors of the Board's intention to terminate the Strong Fund's participation agreements with United Investors effective December 1, 2001 and cease the Discovery Fund's operations soon thereafter. The Board indicated that it decided to close the Discovery Fund because of the Discovery Fund's small asset base, lack of expected asset growth, and lack of economies of scale. The Board also requested that all of the insurance companies currently having separate accounts invested in the Discovery Fund, including United Investors, seek an order from the Commission approving the substitution of other securities for shares of the Discovery Fund currently held by these separate accounts.

12. Applicants had no influence or control over the Board's decision to terminate United Investors' relationship with Discovery Fund. Indeed, United Investors was not even consulted. Further, Applicants believe that some or all of these other insurance companies will seek an order from the Commission to substitute shares of certain securities for shares of Discovery Fund. Accordingly, Applicants believe that the resulting decrease in the assets of Discovery Fund would likely result in higher expenses and less favorable performance, to the detriment of the policy owners.

13. Applicants submit that the AIM Capital Appreciation Fund is a very suitable and appropriate substitute for the Discovery Fund. The AIM Capital Appreciation Fund and the Discovery Fund have the same objective of capital growth. Their investment strategies are very similar, as evidenced from the language quoted above from their prospectuses. They are both stock funds that use a ''growth'' style of stock selection (as opposed to a ''value'' style); both can invest in any size company (small, medium, or large capitalization companies); both can invest, to a limited extent, in foreign stocks; both can invest substantially in debt securities for defensive purposes.

14. The AIM Capital Appreciation Fund is an attractive fund to investors, and Applicants believe that policy owners should actually be better off with the proposed substitution because the AIM Capital Appreciation Fund has more assets, better performance, a substantially lower portfolio turnover rate, and substantially lower expenses than the Discovery Fund. Over the last five years, the AIM Capital Appreciation Fund has grown over 400%. Conversely, the Discovery Fund has declined by approximately 41% in asset size over the last five years. The AIM Capital Appreciation Fund's growing asset base of $1.5 billion allows it to achieve and maintain reasonable economies of scale as evidenced by an expense ratio that at 0.82% is considerably lower than the Discovery Fund's expense ratio of 1.2% (figures are for calendar year 2000). The AIM Capital Appreciation Fund also has a substantially lower management fee.

15. The AIM Capital Appreciation Fund has performed comparably to its benchmark index, the S&P 500 Index, since its inception. Whereas the AIM Capital Appreciation Fund has an average annual total return of 17.37% since its inception on May 5, 1993, its benchmark index has returned 17.72% in that period. For the five-year period

ended December 31, 2000, the AIM Capital Appreciation Fund's average annual total return was 15.45%; the Discovery Fund's annual return for that period was only 5.73%.

16. The AIM Capital Appreciation Fund is also managed efficiently. Its portfolio turnover rate has never been above 100% in the last five years. The Discovery Fund, on the other hand, has a high portfolio turnover rate ranging from 194% to 970% in the last five years.

17. The following charts show the approximate year-end size (in net assets), expense ratio (ratio of operating expenses as a percentage of average net assets), portfolio turnover rate, and annual total returns for each of the past five years for both of the Funds.

Strong discovery fund II	Net assets at year-end (millions)	Expense ratio (before imposition of expense caps) (percent)	Actual expense ratio (percent)	Management fee (percent)	Portfolio turnover rate (percent)	Total return (percent)
1996	$229	1.2	1.2	1.00	970	0.8
1997	214	1.2	1.2	1.00	198	11.4
1998	196	1.2	1.2	1.00	194	7.3
1999	152	1.2	1.1	1.00	235	5.1
2000	136	1.3	1.2	1.00	480	4.4

AIM V.I. Capital appreciation fund	Net assets at year-end (millions)	Expense ratio (before imposition of expense caps) (percent)	Actual expense ratio (percent)	Management fee (percent)	Portfolio turnover rate (percent)	Total return (percent)
1996	$370	0.73	0.73	0.64	59	17.58
1997	523	0.68	0.68	0.63	65	13.50
1998	647	0.67	0.67	0.62	83	19.30
1999	1,131	0.73	0.73	0.62	65	44.61
2000	1,534	0.82	0.82	0.61	98	−10.91

Neither the AIM Capital Appreciation Fund nor the Discovery Fund imposes a Rule 12b–1 fee, and no Rule 12b–1 Plan has been authorized for the AIM Capital Appreciation Fund.

18. Prior to the date the substitution is effected, by supplements to the various prospectuses for the policies and the Accounts, United Investors notified all owners of the policies invested in the Discovery Fund of their intention to take the necessary actions, including seeking the order requested by this Application, to substitute shares of the AIM Capital Appreciation Fund as described herein. The supplements advised policy owners that from the date of the supplement until 30 days after the date of the proposed substitution, owners are permitted to make one transfer (free of charge) of all amounts under a policy invested in the Discovery Fund to any other subaccount available under the policy without that transfer counting as a ''free'' transfer permitted under a policy. The supplements also informed policy owners that United Investors will not exercise any rights reserved under any policy to impose additional restrictions on transfers until at least 30 days after the proposed substitution.

19. United Investors will redeem the shares of Discovery Fund for cash and use the redemption proceeds to purchase shares of the AIM Capital Appreciation Fund. The proposed substitution will take place at relative net asset value with no change in the amount of any policy owner's policy value in either of the Accounts. The number of subaccount units credited to the affected policy owners will, of course, be adjusted to reflect the differences in subaccount unit values between the Discovery Fund and the AIM Capital Appreciation Fund subaccounts on the date of the substitution. As a result, policy owners will remain fully invested. Policy owners will not incur any fees or charges as a result of the proposed substitution, nor will their rights or United Investors' obligations under the policies be altered in any way. All expenses incurred in connection with the proposed substitution, including legal, accounting, and other fees and expenses, will be paid by United Investors. Any brokerage expenses relating to or resulting from the proposed substitution will be borne by United Investors or Strong Capital Management, Inc., so they will not be borne directly or indirectly by policy owners. In addition, the proposed substitution will not impose any tax liability on policy owners. The proposed substitution will not cause the policy fees and charges currently being paid by existing policy owners to be greater after the proposed substitution than before the proposed substitution. United Investors will not exercise any right they may have under the policies to impose additional restrictions on transfers under any of the policies for a period of at least 30 days following the substitution. Any transfers of amounts involved in the substitution made during the 30 days following the proposed substitution will be free of charge and will not count as a ''free'' transfer.

20. Within five days after the proposed substitution, any policy owners who were affected by the substitution will be sent a written notice informing them that the substitution was carried out, and that until 30 days after the substitution they may make one transfer, free of charge, of all policy value under a policy affected by the substitution to another subaccount or separate account available under their policy without that transfer counting as one of any limited number of transfers permitted in a policy year or as one of a limited number of transfers permitted in a policy year free of charge. The notice will also reiterate the fact that United Investors will not exercise any rights reserved by them under the policies to impose additional restrictions on transfers until at least 30 days after the proposed substitution. The notice as delivered in certain states also may explain any other rights they may have under state insurance regulations.

Legal Analysis

1. Applicants request that the Commission issue an order pursuant to section 26(c) of the Act approving the proposed substitution. section 26(c) of the Act requires the depositor of a registered unit investment trust holding the securities of a single issuer to receive Commission approval before substituting the securities held by the trust. Specifically, Section 26(c) states:

It shall be unlawful for any depositor or trustee of a registered unit investment trust holding the security of a single issuer to substitute another security for such security unless the Commission shall have approved such substitution. The Commission shall issue an order approving such substitution if the evidence establishes that it is consistent with the protection of investors and the purposes fairly intended by the policy and provisions of this title.

2. Section 26(c) was added to the Act by the Investment Company Amendments of 1970 (it was originally section 26(b)). Prior to the enactment of the 1970 amendments, a depositor of a unit investment trust could substitute new securities for those held by the trust by notifying the trust's security holders of the substitution within five days of the substitution. In 1966, the Commission, concerned with the high sales charges then common to most unit investment trusts and the disadvantageous position in which such charges placed investors who did not want to remain invested in the substituted fund, recommended that Section 26 be amended to require that a proposed substitution of the underlying investments of a trust receive prior Commission approval.

3. Congress responded to the Commission's concerns by enacting section 26(c) to require that the Commission approve all substitutions by the depositor of investments held by unit investment trusts. The Senate Report on the bill explained the purpose of the amendment as follows:

The proposed amendment recognizes that in the case of the unit investment trust holding the securities of a single issuer notification to shareholders does not provide adequate protection since the only relief available to shareholders, if dissatisfied, would be to redeem their shares. A shareholder who redeems and reinvests the proceeds in another unit investment trust or in an open-end company would under most circumstances be subject to a new sales load. The proposed amendment would close this gap in shareholder protection by providing for Commission approval of the substitution. The Commission would be required to issue an order approving the substitution if it finds the substitution consistent with the protection of investors and provisions of the Act.

4. The proposed substitution appears to involve the substitution of securities within the meaning of section 26(c) of the Act. Applicants therefore request an order from the Commission pursuant to section 26(c) approving the proposed substitution.

5. The policies expressly reserve for United Investors the right, subject to compliance with applicable law, to substitute shares of another management company for shares of a management company held by a subaccount of the Accounts. The prospectuses for the policies contain appropriate disclosure of this right.

6. United Investors reserved this right of substitution both to protect itself and its policy owners in situations where either might be harmed or disadvantaged by circumstances surrounding the issuer of the shares held by one or more of their separate accounts and to afford the opportunity to replace such shares where to do so could benefit themselves and policy owners.

7. The proposed substitution is necessary because the Board decided to close down and liquidate the Discovery Fund. Allowing the proposed substitution will effortlessly transition policy owners into a fund that closely approximates their current investment in terms of investment objective and policies but with lower expenses and better long-term performance.

8. In addition to the foregoing, Applicants generally submit that the proposed substitution meets the standards that the Commission and its staff have applied to similar substitutions that have been approved in the past.

9. The proposed substitution is not the type of substitution that section 26(c) was designed to prevent. Unlike traditional unit investment trusts where a depositor could only substitute an investment security in a manner which permanently affected all the investors in the trust, the policies provide each policy owner with the right to exercise his or her own judgment and transfer policy or cash values into other subaccounts. Moreover, the policies will offer policy owners the opportunity to transfer amounts out of the affected subaccounts into any of the remaining subaccounts without cost or other disadvantage. The proposed substitution, therefore, will not result in the types of costly forced redemption that section 26(c) was designed to prevent.

10. The proposed substitution also is unlike the type of substitution that section 26(c) was designed to prevent in that by purchasing a policy, policy owners select much more than a particular investment company in which to invest their account values. They also select the specific type of insurance coverage offered by United Investors under its policies as well as numerous other rights and privileges set forth in the policies. Policy owners may also have considered United Investors' size, financial condition, type, and reputation for service in selecting their policy. These factors will not change as a result of the proposed substitution.

11. United Investors does not currently receive (and will not receive for three years from the date of the Commission order requested herein) any direct or indirect benefit from the AIM Capital Appreciation Fund or A I M Advisors, Inc., or any of its affiliates, that would exceed the amount that United Investors has received from the Discovery Fund or Strong Capital Management Inc., or any of its affiliates, including without limitation Rule 12b–1 fees, shareholder service or administrative or other service fees, revenue sharing or other arrangements, either with specific reference to the AIM Capital Appreciation Fund or as part of an overall business arrangement.

Conclusion

Applicants request an order of the Commission pursuant to section 26(c) of the Act approving the proposed substitution by United Investors. Applicants submit that, for all the reasons stated above, the proposed substitution is consistent with the protection of investors and the purposes fairly intended by the policy and provisions of the Act.

For the Commission, by the Division of Investment Management, pursuant to delegated authority.

Margaret H. McFarland,

Deputy Secretary.

[FR Doc. 01–30809 Filed 12–12–01; 8:45 am]

BILLING CODE 8010–01–P

SECURITIES AND EXCHANGE COMMISSION

[Release No. 34–45137; File No. SR–NASD–2001–48]

Self-Regulatory Organizations; Notice of Filing of Proposed Rule Change by National Association of Securities Dealers, Inc. To Clarify That the Nasdaq Limited Partnership Qualitative Listing Requirements Are Applicable to Limited Partnerships Listed on Both the National Market and the SmallCap Market

December 6, 2001.

Pursuant to Section 19(b)(1) of the Securities Exchange Act of 1934 (''Act'')[1] notice is hereby given that on August 7, 2001, the National Association of Securities Dealers, Inc. (''NASD'' or ''Association'') through its subsidiary, The Nasdaq Stock Market, Inc. (''Nasdaq''), filed with the Securities and Exchange Commission (''SEC'' or ''Commission'') the proposed rule change as described in Items I, II, and III below, which Items have been prepared by Nasdaq. The Commission is publishing this notice to solicit comments on the proposed rule change from interested persons.

I. Self-Regulatory Organization's Statement of the Terms of Substance of the Proposed Rule Change

The proposed rule change clarifies that Nasdaq's limited partnership qualitative listing requirements are applicable to limited partnerships listed on both the National Market and the SmallCap Market. Nasdaq is also proposing to make a conforming change to Marketplace Rule 4350. Below is the text of the proposed rule change. Proposed new language is italicized; proposed deletions are in brackets.

* * * * *

4350. Qualitative Listing Requirements for Nasdaq National Market and Nasdaq SmallCap Market Issuers Except for Limited Partnerships [traded on the Nasdaq National Market]

(a)–(l) No change

4470. Qualitative Listing Requirements for Nasdaq National Market Issuers That Are Limited Partnerships

Renumbered as Rule 4360 and amended as follows:

4360. Qualitative Listing Requirements for Nasdaq [National Market] Issuers That Are Limited Partnerships

(a) No change

(b) Distribution of Annual and Interim Reports

(1) Each [NNM] issuer that is a limited partnership shall distribute to limited partners copies of an annual report containing audited financial statements of the limited partnership. The report shall be distributed to limited partners within a reasonable period of time after the end of the limited partnership's fiscal year end and shall be filed with Nasdaq at the time it is distributed to limited partners.

(2)(A) Each [NNM] issuer that is a limited partnership which is subject to SEC Rule 13a–13 shall make available copies of quarterly reports including statements of operating results to limited partners either prior to or as soon as practicable following the partnership's filing of its Form 10–Q with the Commission. Such reports shall be distributed to limited partners if required by statute or regulation in the state in which the limited partnership is formed or doing business or by the terms of the partnership's limited partnership agreement. If the form of such quarterly report differs from the Form 10–Q, the issuer shall file one copy of the report with Nasdaq in addition to filing its Form 10–Q pursuant to Rule 4310(c)(14). The statement of operations contained in quarterly reports shall disclose, at a minimum, any substantial items of an unusual or nonrecurrent nature and net income before and after estimated federal income taxes or net income and the amount of estimated federal taxes.

(B) Each [NNM] issuer that is a limited partnership which is not subject to SEC Rule 13a–13 and which is required to file with the Commission, or another federal or state regulatory authority, interim reports relating primarily to operations and financial position, shall make available to limited partners reports which reflect the information contained in those interim reports. Such reports shall be distributed to limited partners if required by statute or regulation in the state in which the limited partnership is formed or doing business or by the terms of the partnership's limited partnership agreement. Such reports shall be distributed to limited partners either before or as soon as practicable following filing with appropriate regulatory authority. If the form of the interim report provided to limited partners differs from that filed with the regulatory authority, the issuer shall file one copy of the report to limited partners with Nasdaq in addition to the report to the regulatory authority that is filed with Nasdaq pursuant to Rule 4310(c)(14).

(c)–(d) No change

(e) Partner Meetings

An [NNM] issuer that is a limited partnership shall not be required to hold an annual meeting of limited partners unless required by statute or regulation in the state in which the limited partnership is formed or doing business or by the terms of the partnership's limited partnership agreement.

(f)–(g) No change

(h) Listing Agreement

Each [NNM] issuer that is a limited partnership shall execute a Listing Agreement in the form designated by Nasdaq.

(i) Conflict of Interest

Each [NNM] issuer which is a limited partnership shall conduct an appropriate review of all related party transactions on an ongoing basis and shall utilize the Audit Committee or a comparable body of the Board of Directors or the review of potential material conflict of interest situations where appropriate.

II. Self-Regulatory Organization's Statement of the Purpose of, and Statutory Basis for, the Proposed Rule Change

In its filing with the Commission, Nasdaq included statements concerning the purpose of, and basis for, the proposed rule change and discussed any comments it received on the proposed rule change. The text of these statements may be examined at the places specified in Item IV below. Nasdaq has prepared summaries, set forth in Sections A, B, and C below, of the most significant aspects of such statements.

A. Self-Regulatory Organization's Statement of the Purpose of, and Statutory Basis for, the Proposed Rule Change

1. Purpose

The purpose of the proposed rule change is to clarify that Nasdaq's limited partnership qualitative listing requirements are applicable to limited partnerships listed on both the National Market and the SmallCap Market. The limited partnership qualitative listing standards were initially adopted in 1993 for limited partnerships listed on the National Market.[2] Limited partnerships listed on the SmallCap Market were not required to comply with these qualitative standards as there were no corporate governance requirements for SmallCap Market issuers at that time. Although corporate governance requirements were subsequently implemented for the SmallCap Market

[1] 15 U.S.C. 78s(b)(1).

[2] Securities Exchange Act Release No. 32250 (April 30, 1993), 58 FR 27601 (May 10, 1993).

in 1997,[3] the limited partnership rules have not been updated to reflect this change. As such, Nasdaq is proposing to amend its Marketplace Rules in order to clarify that the limited partnership qualitative listing standards apply to all limited partnerships listed on Nasdaq.

Nasdaq is also proposing to make a conforming change to Marketplace Rule 4350.

2. Statutory Basis

Nasdaq believes that the proposed rule change is consistent with the provisions of Section 15A(b)(6) of the Act[4] in that the proposal is designed to prevent fraudulent and manipulative acts and practices, and to protect investors and the public interest. As previously mentioned, Nasdaq is proposing to amend its limited partnership qualitative listing standards in order to provide greater clarity and transparency for issuers, their counsel and investors.

B. Self-Regulatory Organization's Statement on Burden on Competition

Nasdaq does not believe that the proposed rule change will result in any burden on competition that is not necessary or appropriate in furtherance of the purposes of the Act.

C. Self-Regulatory Organization's Statement on Comments on the Proposed Rule Change Received from Members, Participants, or Others

Nasdaq has neither solicited nor received written comments on the proposed rule change.

III. Date of Effectiveness of the Proposed Rule Change and Timing for Commission Action

Within 35 days of the date of publication of this notice in the **Federal Register** or within such longer period (i) as the Commission may designate up to 90 days of such date if it finds such longer period to be appropriate and publishes its reasons for so finding or (ii) as to which the self-regulatory organization consents, the Commission will:

(A) by order approve such proposed rule change, or

(B) institute proceedings to determine whether the proposed rule change should be disapproved.

IV. Solicitation of Comments

Interested persons are invited to submit written data, views, and arguments concerning the foregoing. Persons making written submissions should file six copies thereof with the Secretary, Securities and Exchange Commission, 450 Fifth Street, N.W., Washington, DC 20549–0609. Copies of the submission, all subsequent amendments, all written statements with respect to the proposed rule change that are filed with the Commission, and all written communications relating to the proposed rule change between the Commission and any person, other than those that may be withheld from the public in accordance with the provisions of 5 U.S.C. 552, will be available for inspection and copying in the Commission's Public Reference Room. Copies of such filing will also be available for inspection and copying at the principal office of the NASD. All submission should refer to file number SR–NASD–2001–48 and should be submitted by January 3, 2002.

For the Commission, by the Division of Market Regulation, pursuant to delegated authority.[5]

Margaret H. McFarland,

Deputy Secretary.

[FR Doc. 01–30779 Filed 12–12–01; 8:45 am]

BILLING CODE 8010–01–M

[3] Securities Exchange Act Release No. 38961 (August 22, 1997), 62 FR 45895 (August 29, 1997).

[4] 15 U.S.C. 78o–3(b)(6).

[5] 17 CFR 200.30–3(a)(12).

TENNESSEE VALLEY AUTHORITY

Patton Island Bridge and Approaches Crossing the Tennessee River and Connecting the Cities of Florence and Muscle Shoals, Colbert and Lauderdale Counties, AL

AGENCY: Tennessee Valley Authority (TVA).

ACTION: Issuance of Supplemental Record of Decision.

SUMMARY: This notice is provided in accordance with the Council on Environmental Quality's regulations (40 CFR part 1500 to 1508) and TVA's procedures implementing the National Environmental Policy Act. TVA has decided to issue an approval to the Alabama Department of Transportation under section 26a of the TVA Act for the relocation and modification of 2,270 feet of Sweetwater Creek. The purpose of the relocation is to allow construction of the northern approaches to the Patton Island Bridge across the Tennessee River. TVA previously adopted the Final Environmental Impact Statement, Project DE–0026(801), Patton Island Bridge and Approaches Crossing the Tennessee River and Connecting the Cities of Florence and Muscle Shoals, Colbert and Lauderdale Counties, (FEIS) prepared by the State of Alabama Highway Department in Cooperation with the Department of Transportation, Federal Highway Administration. A Notice of TVA's adoption of this FEIS and of TVA's issuance of the Record of Decision to adopt the ''Build'' alternative in the FEIS was given in the **Federal Register** of September 29, 1994.

FOR FURTHER INFORMATION CONTACT: Harold M. Draper, NEPA Specialist, Environmental Policy and Planning, Tennessee Valley Authority, 400 West Summit Hill Drive, WT 8C, Knoxville, Tennessee 37902–1499; telephone (865) 632–6889 or e-mail *hmdraper@tva.gov.*

SUPPLEMENTARY INFORMATION: Under the ''build'' alternative identified in the FEIS, a multi-lane highway would be built across the Tennessee River. On September 20, 1994, TVA issued a Record of Decision (ROD) for its adoption of the ''build'' alternative. The build alternative required approval for the Patton Island Bridge crossing under section 26a of the TVA Act, and approval for a permanent easement over 63.7 acres of TVA land for construction, operation, and maintenance of a new highway across the Muscle Shoals Reservation and Pickwick Reservoir lands. This previous ROD appeared at 59 FR 49738 (September 29, 1994). The Alabama Department of Transportation has now requested approval for construction of an additional segment of the Patton Island project. The additional segment would require approval under section 26a of the TVA Act for a channel relocation and two culverts affecting 2270 feet of Sweetwater Creek. The impacts of this segment were evaluated in the 1991 FEIS and have been verified by TVA in issuing this supplemental ROD.

Alternatives Considered

The previously adopted EIS evaluated five alternative corridors for a new multi-lane road between Muscle Shoals and Florence. In the Patton Island Corridor, two alternatives were considered. North of the Patton Island Bridge, two alternatives were considered. Because construction of the Patton Island bridge has been underway for several years, TVA re-evaluated the no action alternative and the two action alternatives considered in the 1991 FEIS for completion of the remainder of the project. Under No Action, the Patton Island Expressway would end at the northern side of the River and not continue to Florence Boulevard (US 43–72), which is a logical terminus. The two action alternatives are:

1A. Build along a corridor designated ''Alternative A.'' North of the Tennessee River and in the vicinity of Sweetwater

Creek, this route would be slightly to the east of Alternative B and cross under Florence Boulevard (U.S. 43–72). In order to construct an underpass at the Florence Boulevard intersection, retaining walls would be required, adding to the costs of the project, and a compact diamond-shaped interchange would be constructed. This would restrict the length and functioning of turning lanes on Florence Boulevard.

1B. Build along a corridor designated ''Alternative B.'' North of the Tennessee River and in the vicinity of Sweetwater Creek, this route would be slightly to the west of Alternative A. It would cross over Florence Boulevard, and therefore would not restrict the potential length and functioning of turning lanes as in Alternative A. Both Alternative 1A and Alternative 1B would require that a playground in a public housing development be moved. Avoidance of the playground was judged to be not practicable because additional residential property losses (Alternative A), or a relocation of a railroad switching yard (Alternative B), would be required. The playground will be replaced in a new location convenient to the housing project.

Because the original EIS was issued in 1991, TVA conducted a supplemental environmental review of the impacts of the Sweetwater Creek relocation to confirm that the findings of the 1991 EIS were still valid. The proposed stream relocation and modification of Sweetwater Creek was announced to the public and environmental agencies through issuance of a Joint Public Notice by the U.S. Army Corps of Engineers, TVA, and the State of Alabama on June 20, 2000. Responses were received from the Alabama Historical Commission (AHC), the U.S. Fish and Wildlife Service (FWS), The Foundry of the Shoals, and two members of the public. AHC requested that a cultural resources assessment be provided for review. Information on previous section 106 coordination was subsequently provided, and by letter of August 10, 2000, AHC concurred that the project would not adversely affect resources eligible for the National Register of Historic Places. FWS expressed concerns about the loss of a riparian buffer along the stream and recommended that the proposed riprapped channel be meandered and planted with mast-producing hardwood trees. They also requested mitigation of any unavoidable loss of aquatic habitat through the Alabama Stream Habitat Restoration Program. The stream habitat program was never created, and therefore is not a viable mitigation option. However, the applicant has agreed to replant the proposed new channel with hardwood trees in a 30-foot wide riparian buffer on both sides of the stream. Additionally, the applicant has agreed to deduct 0.5 credits from the Alabama Department of Transportation wetland mitigation bank. The banking agreement includes sites throughout Alabama, and suitable compensatory mitigation banks currently exist for use by ADOT in Jackson County, Alabama and Lawrence County, Alabama within the Tennessee River watershed. The Foundry of the Shoals was concerned that the proposed project would increase flooding in the area. Members of the public expressed concerns about the length of the culverting and the loss of natural stream values. TVA has reviewed the plans and confirmed that there would be no reduction in the size of the channel; as a result, flooding problems would not be affected by the highway construction. Because this is an urban area, the stream exhibits few natural stream values. In addition, it is not practical to reduce the length of the culvert because this is the only place to squeeze a multi-lane facility through an urban area without extensive residential or industrial property impacts. Both Alternatives 1A and 1B would have impacts to the floodplain. Only no action would not impact the floodplain. However, this alternative is not practicable because the traffic congestion needs are not addressed. Florence is a participant in the National Flood Insurance Program. In accordance with this program, the project will not significantly increase 100-year flood elevations and will not involve placement of fill or other flow obstructions in the floodway portion of the floodplain unless compensatory adjustments are also included. By letter of July 24, 2000, the Alabama Department of Environmental Management issued Water Qualify Certification under section 401 of the Clean Water Act.

Based on the supplemental evaluation, TVA concurs that the Alternative 1B route north of the river in the city of Florence is still the appropriate build alternative.

Decision

TVA has decided to issue section 26a approval for the relocation and modification of 2,270 feet of Sweetwater Creek in Florence, Alabama. Specific actions requiring section 26a approval are a culvert extending 1400 feet from north of Huntsville Avenue to south of the proposed new highway, a channel relocation and riprap extending 760 feet south of the Huntsville Avenue-Patton Island Expressway culvert, and a culvert extending 110 feet under Union Avenue. The relocation, culverts, and riprap would allow completion of the Patton Island project originally proposed in the FEIS. Based on its supplemental evaluation, TVA reaffirms that the analyses contained in the FEIS are adequate. The EIS concluded that Alternative 1B north of the river in Florence is the appropriate build alternative. Alternative 1B is the more practical alternative given the topography of the Florence area, and would result in less traffic congestion on Florence Boulevard. Because of these reasons, TVA believes that this is the more environmentally preferable alternative for completion of the Patton Island project. The other action alternative in the Sweetwater Creek area, Alternative 1A, would require a retaining wall at the Cherry Hills Housing Project playground, which representatives of the project have said is not desirable. The No Action alternative is not desirable because it would result in increasing traffic congestion as the area grows.

Environmental Commitments

TVA will require the use of Best Management Practices for erosion control and will also require that the relocated channel be planted with a 30-foot width of mast-producing hardwood trees on each side of the channel. In addition, 0.5 credits will be withdrawn from the Alabama Department of Transportation wetland mitigation bank complex. With the implementation of the above environmental protection measures, TVA has determined that adverse environmental impacts of the Patton Island Expressway project across Sweetwater Creek would be substantially reduced. These protective measures represent all of the practicable measures to avoid or minimize environmental harm that are associated with this alternative.

Dated: December 5, 2001.

Kathryn J. Jackson,

Executive Vice President, River System Operations & Environment.

[FR Doc. 01–30813 Filed 12–12–01; 8:45 am]

BILLING CODE 8120–08–P

DEPARTMENT OF TRANSPORTATION

Federal Railroad Administration

[Docket Number FRA–2001–10235]

Notice of Public Hearing; the Union Pacific Railroad

The Union Pacific Railroad (UP) has petitioned the Federal Railroad

Administration (FRA) seeking a waiver of compliance with the requirements of 49 CFR 214.329. UP requests relief that will permit the use of a system described by UP as the automatic train approach warning system (TAWS). UP proposes that roadway work groups be permitted to substitute TAWS for watchmen/lookouts as the method of train approach warning when fouling a track within equipped interlockings and controlled points. UP also proposes that lone workers be permitted to use TAWS as a method of train approach warning within the limits of those interlockings and controlled points without a requirement to establish working limits. Technical details of the TAWS system, its developmental history, and its function were described in the **Federal Register** notice cited in the following sentence.

The FRA issued a public notice (66 FR 49063, September 25, 2001) seeking comments of interested parties. All documents in the public docket, including UP's detailed waiver request, are also available for inspection and copying on the Internet at the docket facility's Web site at *http://dms.dot.gov.* After examining the railroad's proposal and the available facts, FRA has determined that a public hearing is necessary before a final decision is made on this proposal.

Accordingly, a public hearing is hereby set for 9 a.m. CST, on Wednesday, February 6, 2002, in Room 102–A (first floor) of the Peter Kiewit Building, 1313 Farnam Street, Omaha, Nebraska. Interested parties are invited to present oral statements at the hearing.

The hearing will be an informal one and will be conducted in accordance with Rule 25 of the FRA Rules of Practice (Title 49 CFR 211.25), by a representative designated by the FRA.

Issued in Washington, DC on December 10, 2001.

Grady C. Cothen, Jr.,

Deputy Associate Administrator for Safety Standards and Program Development.

[FR Doc. 01–30822 Filed 12–12–01; 8:45 am]

BILLING CODE 4910–06–P

DEPARTMENT OF TRANSPORTATION

Surface Transportation Board

[STB Docket No. AB–290 (Sub–No. 216X)]

Norfolk Southern Railway Company—Abandonment Exemption—in Buchanan County, VA

Norfolk Southern Railway Company (NSR) has filed a verified notice of exemption under 49 CFR 1152 Subpart *F—Exempt Abandonments* to abandon a 2.95-mile line of railroad between milepost SP–0.0, at Dwight, and milepost SP–2.95, at Spruce Pine, in Buchanan County, VA (line). The line traverses United States Postal Service Zip Code 24066.

Applicant has certified that: (1) No local or overhead traffic has moved over the line for at least 2 years; (2) any overhead traffic, if there is any, can be rerouted over other lines; (3) no formal complaint filed by a user of rail service on the line (or by a state or local government agency acting on behalf of such user) regarding cessation of service over the line either is pending with the Surface Transportation Board (Board) or any U.S. District Court or has been decided in favor of complainant within the 2-year period; and (4) the requirements at 49 CFR 1105.7 (environmental reports), 49 CFR 1105.8 (historic reports), 49 CFR 1105.11 (transmittal letter), 49 CFR 1105.12 (newspaper publication), and 49 CFR 1152.50(d)(1) (notice to governmental agencies) have been met.

As a condition to this exemption, any employee adversely affected by the abandonment shall be protected under *Oregon Short Line R. Co.—Abandonment—Goshen,* 360 I.C.C. 91 (1979). To address whether this condition adequately protects affected employees, a petition for partial revocation under 49 U.S.C. 10502(d) must be filed. Provided no formal expression of intent to file an offer of financial assistance (OFA) has been received, this exemption will be effective on January 12, 2002, unless stayed pending reconsideration. Petitions to stay that do not involve environmental issues,[1] formal expressions of intent to file an OFA under 49 CFR 1152.27(c)(2),[2] and trail use/rail banking requests under 49 CFR 1152.29 must be filed by December 24, 2001. Petitions to reopen or requests for public use conditions under 49 CFR 1152.28 must be filed by January 2, 2002, with the Surface Transportation Board, Office of the Secretary, Case Control Unit, 1925 K Street, NW., Washington, DC 20423–0001.

A copy of any petition filed with the Board should be sent to applicant's representative: James R. Paschall, Esq., Norfolk Southern Corporation, Three Commercial Place, Norfolk, VA 23510. If the verified notice contains false or misleading information, the exemption is void *ab initio.*

Applicant has filed a separate environmental report which addresses the abandonment's effects, if any, on the environment and historic resources. SEA will issue an environmental assessment (EA) by December 18, 2001. Interested persons may obtain a copy of the EA by writing to SEA (Room 500, Surface Transportation Board, Washington, DC 20423–0001) or by calling SEA, at (202) 565–1552. Comments on environmental and historic preservation matters must be filed within 15 days after the EA becomes available to the public.

Environmental, historic preservation, public use, or trail use/rail banking conditions will be imposed, where appropriate, in a subsequent decision.

Pursuant to the provisions of 49 CFR 1152.29(e)(2), NSR shall file a notice of consummation with the Board to signify that it has exercised the authority granted and fully abandoned the line. If consummation has not been effected by NSR's filing of a notice of consummation by December 13, 2002, and there are no legal or regulatory barriers to consummation, the authority to abandon will automatically expire.

Board decisions and notices are available on our Website at *www.stb.dot.gov.*

Decided: December 3, 2001.

By the Board, David M. Konschnik, Director, Office of Proceedings.

Vernon A. Williams,

Secretary.

[FR Doc. 01–30448 Filed 12–12–01; 8:45 am]

BILLING CODE 4915–00–P

[1] The Board will grant a stay if an informed decision on environmental issues (whether raised by a party or by the Board's Section of Environmental Analysis (SEA) in its independent investigation) cannot be made before the exemption's effective date. *See Exemption of Out-of-Service Rail Lines,* 5 I.C.C.2d 377 (1989). Any request for a stay should be filed as soon as possible so that the Board may take appropriate action before the exemption's effective date.

[2] Each offer of financial assistance must be accompanied by the filing fee, which currently is set at $1000. See 49 CFR 1002.2(f)(25).

DEPARTMENT OF THE TREASURY

Submission for OMB Review; Comment Request

December 7, 2001.

The Department of the Treasury has submitted the following public information collection requirement(s) to OMB for review and clearance under the Paperwork Reduction Act of 1995, Public Law 104–13. Copies of the submission(s) may be obtained by calling the Treasury Bureau Clearance Officer listed. Comments regarding this information collection should be addressed to the OMB reviewer listed and to the Treasury Department Clearance Officer, Department of the

Treasury, Room 2110, 1425 New York Avenue, NW., Washington, DC 20220.

DATES: Written comments should be received on or before January 14, 2002, to be assured of consideration.

Internal Revenue Service (IRS)

OMB Number: 1545–1630.

Regulation Project Number: REG–106388–98 NPRM.

Type of Review: Extension.

Title: Education Tax Credits.

Description: Section 25A allows individual taxpayers a Hope Scholarship Credit or a Lifetime Learning Credit for certain educational expenses if certain requirements are met. The proposed regulations provide guidance to taxpayers regarding the education credits in section 25A. Section 25A provides that a taxpayer must elect to claim an education credit. The proposed regulations provide that a taxpayer must elect to claim an education credit by attaching Form 8863, ''Education Credits (Hope and Lifetime Learning Credits)'' to the taxpayer's return for the year in which the credit is claimed.

Respondents: Individuals or households.

Estimated Number of Respondents: 1.

Estimated Burden Hours Per Respondent: 1 hour.

Frequency of Response: Annually.

Estimated Total Reporting Burden: 1 hour.

Clearance Officer: George Freeland, Internal Revenue Service, Room 5577, 1111 Constitution Avenue, NW., Washington, DC 20224.

OMB Reviewer: Alexander T. Hunt, Office of Management and Budget, Room 10202, New Executive Office Building, Washington, DC 20503, (202) 395–7860.

Mary A. Able,

Departmental Reports Management Officer.

[FR Doc. 01–30776 Filed 12–12–01; 8:45 am]

BILLING CODE 4830–01–P

Federal Register

Thursday,
December 13, 2001

Part II

The President

Proclamation 7512—To Implement the Agreement Between the United States of America and the Hashemite Kingdom of Jordan on the Establishment of a Free Trade Area

Federal Register
Vol. 66, No. 240
Thursday, December 13, 2001

Presidential Documents

Title 3—

The President

Proclamation 7512 of December 7, 2001

To Implement the Agreement Between the United States of America and the Hashemite Kingdom of Jordan on the Establishment of a Free Trade Area

By the President of the United States of America

A Proclamation

1. On October 24, 2000, the United States of America and the Hashemite Kingdom of Jordan entered into an Agreement on the Establishment of a Free Trade Area (the ''JFTA'').

2. Section 101 of the United States-Jordan Free Trade Area Implementation Act (the ''JFTA Act'') (Public Law 107–43, 115 Stat. 243) (19 U.S.C. 2112 Note) authorizes the President to proclaim such modifications or continuation of any duty, such continuation of duty-free or excise treatment, or such additional duties, as the President determines to be necessary or appropriate to carry out Article 2.1 of the JFTA and the schedule of duty reductions with respect to Jordan set out in Annex 2.1 of the JFTA.

3. Section 102 of the JFTA Act provides certain rules for determining whether an article is wholly the growth, product, or manufacture of Jordan, or is a new or different article of commerce that has been grown, produced, or manufactured in Jordan and thus is eligible for the tariff and certain other treatment contemplated under the JFTA (''products of Jordan''). I have determined that it is necessary to include these rules of origin, together with particular rules applicable to certain other goods, in the Harmonized Tariff Schedule of the United States (HTS).

4. Section 604 of the Trade Act of 1974, as amended (the ''1974 Act'') (19 U.S.C. 2483) authorizes the President to embody in the HTS the substance of relevant provisions of that Act, of other Acts affecting import treatment, and of actions taken thereunder.

NOW, THEREFORE, I, GEORGE W. BUSH, President of the United States of America, acting under the authority vested in me by the Constitution and the laws of the United States of America, including sections 101 and 102 of the JFTA Act and 604 of the 1974 Act, do proclaim that:

(1) In order to—

(a) provide generally for the preferential tariff treatment being accorded under the JFTA and to set forth rules for determining whether goods imported into the customs territory of the United States are eligible for preferential treatment under the JFTA, and

(b) provide tariff-rate quotas with respect to certain products of Jordan and to make technical and conforming changes in specified HTS provisions for purposes of the JFTA, the HTS is modified as set forth in Annex I to this proclamation.

(2) In order to implement the initial stage of duty elimination provided for in the JFTA and to provide for future staged reductions in duties for products of Jordan for purposes of the JFTA, the HTS is modified as provided in Annex II to this proclamation, effective on the date specified in such Annex for each HTS provision and on any subsequent dates set forth for such provisions in Annex II columns.

(3) All provisions of previous proclamations and Executive Orders that are inconsistent with the actions taken in this proclamation are hereby superseded to the extent of such inconsistency.

(4) (a) The amendments to the HTS made by paragraphs (1)(b) and (2) of this proclamation shall be effective with respect to goods entered, or withdrawn from warehouse for consumption, on or after the dates indicated in Annexes I and II to this proclamation.

(b) Except as provided in subparagraph (a), this proclamation shall be effective with respect to goods entered, or withdrawn from warehouse for consumption, on or after December 17, 2001.

IN WITNESS WHEREOF, I have hereunto set my hand this seventh day of December, in the year of our Lord two thousand one, and of the Independence of the United States of America the two hundred and twenty-sixth.

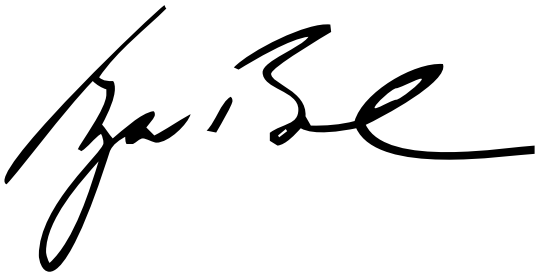

Billing code 3195–01–P

ANNEX I

MODIFICATIONS TO THE HARMONIZED TARIFF SCHEDULE OF THE UNITED STATES

Effective with respect to goods that are entered, or withdrawn from warehouse for consumption, on or after December 17, 2001, the Harmonized Tariff Schedule of the United States (HTS) is hereby modified as follows.

The HTS is modified as provided below, with bracketed matter included to assist in the understanding of proclaimed modifications. The following supersedes matter in the HTS. The subheadings and superior text are set forth in columnar format, and material in such columns is inserted in the columns of the HTS designated "Heading/Subheading", "Article Description", "Rates of Duty 1 General", "Rates of Duty 1 Special" and "Rates of Duty 2", respectively.

(1). General note 3(c)(i) is modified by inserting, immediately above the line reading "Agreement on Trade in Pharmaceutical Products.....K', a new line reading "United States-Jordan Free Trade Area Implementation Act.....JO".

(2). General notes 18, 19, 20, 21, 22 and 23 are hereby redesignated as notes 19, 20, 21, 22, 23 and 24, respectively, and the following new general note 18 is inserted in numerical sequence:

"18. United States-Jordan Free Trade Area Implementation Act.

(a) The products of Jordan described in Annex 2.1 of the Agreement between the United States of America and the Hashemite Kingdom of Jordan on the Establishment of a Free Trade Area, entered into on October 24, 2000, are subject to duty as provided herein. Products of Jordan, as defined in subdivisions (b) through (d) of this note, that are imported into the customs territory of the United States and entered under a provision for which a rate of duty appears in the "Special" subcolumn followed by the symbol "JO" in parentheses are eligible for the tariff treatment set forth in the "Special" subcolumn, in accordance with sections 101 and 102 of the United States-Jordan Free Trade Area Implementation Act (Public Law 107-43, 115 Stat. 243).

(b) For purposes of this note, subject to the provisions of subdivisions (d) and (e), goods imported into the customs territory of the United States are eligible for treatment as "products of Jordan" only if–

(i) such goods are imported directly from Jordan into the customs territory of the United States, and

(ii) they are–

(A) wholly the growth, product or manufacture of Jordan, or

(B) new or different articles of commerce that have been grown, produced or manufactured in Jordan and meet the requirements of subdivision (c) of this note.

(c) (i) For purposes of subdivision (b)(ii)(A) of this note, except as otherwise provided in subdivision (d) for textile and apparel articles, the expression "wholly the growth, product or manufacture of Jordan" refers both to--

(A) an article which has been entirely grown, produced or manufactured in Jordan, and

(B) all materials incorporated in an article which have been entirely grown, produced or manufactured in Jordan,

but does not include articles or materials imported into Jordan from another country, whether or not such articles or materials were substantially transformed into new or different articles of commerce after their importation into Jordan.

(ii) For purposes of subdivision (b)(ii)(B), goods are eligible for the tariff treatment provided in this note if the sum of–

Annex I (continued)
-2-

(A) the cost or value of the materials produced in Jordan, plus

(B) the direct costs of processing operations performed in Jordan,

is not less than 35 percent of the appraised value of such article at the time it is entered. If the cost or value of materials produced in the customs territory of the United States is included with respect to an article to which this subdivision applies, an amount not to exceed 15 percent of the appraised value of the article at the time it is entered that is attributable to such United States cost or value may be applied toward determining the percentage referred to in this subdivision.

(iii) No article may be considered to meet the requirements of this note by virtue of having merely undergone–

(A) simple combining or packaging operations, or

(B) mere dilution with water or mere dilution with another substance that does not materially alter the characteristics of the article.

(iv) For purposes of subdivision (ii)(A), the term "cost or value of the materials" includes–

(A) the manufacturer's actual cost for the materials,

(B) when not included in the manufacturer's actual cost for the materials, the freight, insurance, packing and all other costs incurred in transporting the materials to the manufacturer's plant,

(C) the actual cost of waste or spoilage (material list), less the value of recoverable scrap, and

(D) taxes and/or duties imposed on the materials by a party to the Agreement, provided they are not remitted upon exportation.

When a material is provided to the manufacturer without charge, or at less than fair market value, its cost or value shall be determined by computing the sum of (I) all expenses incurred in the growth, production or manufacturer of the material, including general expenses; (II) an amount for profit; and (III) freight, insurance, packing, and all other costs incurred in transporting the material to the manufacturer's plant. If the pertinent information is not available, the appraising officer may ascertain or estimate the value thereof using all reasonable ways and means at his disposal.

(v) For purposes of subdivision (ii)(B), the term "direct costs of processing operations" performed in Jordan means those costs either directly incurred in, or which can be reasonably allocated to, the growth, production, manufacture or assembly of the goods entered under the terms of subdivision (a) of this note. That term includes, but is not limited to, the following, to the extent that they are includible in the appraised value of goods imported into the customs territory of the United States–

(A) all actual labor costs involved in the growth, production, manufacture or assembly of the specific merchandise, including fringe benefits, on-the-job training and the cost of engineering, supervisory, quality control and similar personnel, and

(B) dies, molds, tooling and depreciation on machinery and equipment which are allocable to the specific merchandise,

(C) research, development, design, engineering and blueprint costs insofar as they are allocable to the specific article, and

(D) costs of inspecting and testing the specific article;

but that term does not include costs which are not directly attributable to the merchandise concerned, or are not costs of manufacturing the product, such as (I) profit, and (II) general expenses of doing business which are either not allocable to the specific merchandise or are not related to the growth, production, manufacture or assembly of the merchandise, such as administrative salaries, casualty and liability insurance, advertising and salesmen's salaries, commissions or expenses.

(vi) For purposes of subdivision (b)(i) of this note, except for goods covered by the provisions of subdivision (d) of this note, the term "imported directly" means–

Annex I (continued)
-3-

(A) direct shipment from Jordan to the United States without passing through the territory of any intermediate country, or

(B) if shipment is through the territory of an intermediate country, the articles in the shipment do not enter into the commerce of any intermediate country and the invoices, bills of lading and other shipping documents show the United States as the final destination, or

(C) if shipment is through an intermediate country and the invoices and other documents do not show the United States as the final destination, then the articles in the shipment are imported directly only if they–

(I) remain under the control of the customs authority in an intermediate country,

(II) do not enter into the commerce of an intermediate country except for the purpose of a sale other than at retail, provided that the articles are imported as a result of the original commercial transaction between the importer and the producer or the producer's sales agent, and

(III) have not been subjected to operations other than loading and unloading, and other activities necessary to preserve the article in good condition.

(d) Textile and apparel articles.

(1) For purposes of this note, a textile or apparel article imported directly from Jordan into the customs territory of the United States shall be eligible for the tariff treatment provided in subdivision (a) of this note only if–

(A) the article is wholly obtained or produced in Jordan;

(B) the article is a yarn, thread, twine, cordage, rope, cable or braiding, and–

(i) the constituent staple fibers are spun in Jordan, or

(ii) the continuous filament is extruded in Jordan;

(C) the article is a fabric, including a fabric classified in chapter 59 of the tariff schedule, and the constituent fibers, filaments or yarns are woven, knitted, needled, tufted, felted, entangled or transformed by any other fabric-making process in Jordan; or

(D) the article is any other textile or apparel article that is wholly assembled in Jordan from its component pieces.

Such textile and apparel articles not wholly obtained or produced in Jordan must comply with the requirements of this subdivision and of subdivision (c)(ii) of this note.

(2) For purposes of subdivision (d)(1)(A) of this note, an article is "wholly obtained or produced in Jordan" if it is wholly the growth, product or manufacture of Jordan.

(3) Notwithstanding the provisions of subdivision (d)(1)(D) and except as provided in subdivisions (d)(5) and (d)(6) of this note, subdivision (d)(1)(A), (d)(1)(B) or (d)(1)(C), as appropriate, shall determine whether a good that is classified in one of the following headings or subheadings of the tariff schedule shall be considered to meet the requirements of subdivision (b) of this note: 5609, 5807, 5811, 6209.20.50 (the requirement of this subdivision applies only to babies' diapers of this provision), 6213, 6214, 6301, 6302, 6304, 6305, 6306, 6307.10, 6307.90, 6308.00.00 and 9404.90.

(4) Notwithstanding the provisions of subdivision (d)(1)(D) and except as provided in subdivisions (d)(5) and (d)(6) of this note, a textile or apparel article which is knit-to-shape in Jordan shall be considered to meet the requirements of subdivision (b) of this note.

(5) Notwithstanding the provisions of subdivision (d)(1)(D) of this note, a good classified in subheading 6117.10, heading 6213 or 6214 or subheadings 6302.22, 6302.29.00, 6302.52, 6302.53.00, 6302.59.00, 6302.92.00, 6302.93, 6302.99, 6303.92, 6303.99.00, 6304.19, 6304.93.00, 6304.99, 9404.90.85 or 9404.90.95 of the tariff schedule, except for a good classified in any such provision as of cotton or of wool or consisting of fiber blends containing 16 percent or more by weight of cotton, shall be considered to meet the requirements of

subdivision (b) of this note if the fabric in the good is both dyed and printed in Jordan, and such dyeing and printing is accompanied by two or more of the following finishing operations: bleaching, shrinking, fulling, napping, decating, permanent stiffening, weighting, permanent embossing or moireing.

(6) Notwithstanding the provisions of subdivision (d)(1)(C) of this note, a fabric classified in the tariff schedule as of silk, cotton, man-made fiber, or vegetable fiber shall be considered to meet the requirements of subdivision (b) of this note if the fabric is both dyed and printed in Jordan, and such dyeing and printing is accompanied by two or more of the following finishing operations: bleaching, shrinking, fulling, napping, decating, permanent stiffening, weighting, permanent embossing or moireing.

(7) If the origin of a textile or apparel article cannot be determined under subdivision (d)(1) or (d)(3) through (d)(6), inclusive, of this note, then that article shall be considered to meet the requirements of subdivision (b) of this note if–

(A) the most important assembly or manufacturing process occurs in Jordan, or

(B) if the applicability of subdivision (b) of this note cannot be determined under subdivision (d)(7)(A) of this note, the last important assembly or manufacturing occurs in Jordan.

(e) Exclusion. A good shall not be considered to meet the requirements of subdivision (b) of this note if the good–

(1) is imported into Jordan, and, at the time of importation, would be classified in heading 0805 of the tariff schedule, and

(2) is processed in Jordan into a good classified in subheadings 2009.11.00 through 2009.30, inclusive, of the tariff schedule.

(f) Certification and records. Whenever an importer enters an article as eligible for the preferential treatment provided under this note–

(1) the importer shall be deemed to certify that such article qualifies for the preferential treatment provided under this note;

(2) the importer shall be prepared to submit to the customs officer concerned, upon request, a declaration setting forth all pertinent information concerning the production or manufacture of the article, and the information on such declaration should contain at least the following pertinent details:

(A) a description of the article, quantity, numbers and marks of packages, invoice numbers and bills of lading;

(B) a description of the operations performed in the production of the article in Jordan and identification of the direct costs of processing operations;

(C) a description of any materials used in the production of the article which are wholly the growth, product or manufacture of Jordan or of the United States, and a statement as to the cost or value of such materials;

(D) a description of the operations performed on, and a statement as to the origin and cost or value of, any foreign materials used in the article which are claimed to have been sufficiently processed in Jordan so as to be materials produced in Jordan; and

(E) a description of the origin and cost or value of any foreign materials used in the article which have not been substantially transformed in Jordan.

This declaration shall be prepared, signed and submitted upon request by the U.S. customs officer concerned. A declaration should only be requested when the Customs Service has reason to question the accuracy of the certification that, by operation of subdivision (f)(1) of this note, is deemed to have occurred, or when the Customs Service procedures for assessing the risk of improper or incorrect entry of an article indicate that verification of an entry is appropriate, or when a random verification is conducted. The information necessary for the preparation of the declaration shall be retained in the files of the importer for a period of five years.

Annex I (continued)
-5-

(g) The Secretary of the Treasury, after consultation with the United States Trade Representative, shall prescribe such regulations as may be necessary to carry out this note."

(3). The last sentence of U.S. note 1 to subchapter IV of chapter 99 is modified by deleting "Goods of Canada or Mexico imported" and inserting "Goods of Canada, Mexico or Jordan imported" in lieu thereof.

(4). Chapter 99 is modified by inserting a new subchapter at the end thereof, as follows:

"SUBCHAPTER IX

TEMPORARY MODIFICATIONS ESTABLISHED PURSUANT TO
THE UNITED STATES-JORDAN FREE TRADE AGREEMENT

U.S. Notes

1. This subchapter contains temporary modifications of the provisions of the tariff schedule established pursuant to the United States-Jordan Free Trade Agreement. Qualifying goods of Jordan, entered under the terms of general note 18 to the tariff schedule, and described in the provisions of this subchapter, for which a rate of duty followed by the symbol "(JO)" is herein provided, are subject to duty at the rate set forth in this subchapter in lieu of the rate provided therefor in chapters 1 through 98. Notwithstanding quota provisions provided for elsewhere in the tariff schedule, originating goods of Jordan shall be permitted to enter the United States to the extent allowable in the provisions of this subchapter. Furthermore, any quantity provided for Jordan on goods in this subchapter shall not be counted toward any quota provided for such good elsewhere in the tariff schedule. Originating goods of Jordan imported into the United States also shall not be subject to any of the provisions, duties or limitations of subchapter IV of chapter 99 of the tariff schedule. Unless otherwise provided, the provisions and notes of this subchapter are effective as to such goods of Jordan entered, under general note 18 to the tariff schedule, through the close of December 31, 2010, at the close of which date this subchapter shall be deleted from the tariff schedule and shall cease to apply to any goods entered after that date.

2. Whenever goods are classifiable under a provision for which the temporary modification of the applicable United States-Jordan Free Trade Agreement rate of duty is provided for in a subheading in this subchapter, the reporting number, in the absence of specific instructions to the contrary, shall be the appropriate statistical reporting number for the basic provision (the appropriate provision for classification purposes in chapters 1 through 97) preceded by the subheading number of this subchapter. For statistical purposes, both the basic provision statistical reporting number and the applicable subheading number of this subchapter shall be collected by the United States Bureau of Census.

3. The aggregate quantity of goods, that are qualifying goods entered under subheading 9909.04.05 in any calendar year shall not exceed the quantity specified below for that year:

Year	Quantity (kg)	Year	Quantity (kg)	Year	Quantity (kg)
2001	60,000	2004	117,000	2007	229,000
2002	75,000	2005	146,000	2008	286,000
2003	94,000	2006	183,000	2009	358,000

Beginning in calendar year 2010 quantitative limitations shall cease to apply on such qualifying goods.

4. The aggregate quantity of goods, that are qualifying goods entered under subheading 9909.12.05 entered in any calendar year, shall not exceed the quantity specified below for that year:

Year	Quantity (kg)	Year	Quantity (kg)	Year	Quantity (kg)
2001	1,000	2004	1,150	2007	1,300
2002	1,050	2005	1,200	2008	1,400
2003	1,100	2006	1,250	2009	1,450

Provided, that peanuts in the shell shall be charged against the above quotas on the basis of 75 kilograms for each 100 kilograms of peanuts in the shell.

Annex I (continued)
-6-

Beginning in calendar year 2010 quantitative limitations shall cease to apply on such qualifying goods.

5. The aggregate quantity of goods, that are qualifying goods entered under subheading 9909.17.05 in any calendar year, shall not exceed the quantity specified below for that year:

Year	Quantity (kg)	Year	Quantity (kg)	Year	Quantity (kg)
2001	5,000	2004	5,450	2007	6,000
2002	5,150	2005	5,600	2008	6,150
2003	5,300	2006	5,800	2009	6,300

Beginning in calendar year 2010 quantitative limitations shall cease to apply on such qualifying goods.

6. The aggregate quantity of goods, that are qualifying goods entered under subheading 9909.52.05 in any calendar year, shall not exceed the quantity specified below for that year:

Year	Quantity (kg)	Year	Quantity (kg)	Year	Quantity (kg)
2001	1,000	2004	1,150	2007	1,300
2002	1,050	2005	1,200	2008	1,400
2003	1,100	2006	1,250	2009	1,450

Beginning in calendar year 2010 quantitative limitations shall cease to apply on such qualifying goods.

Annex I (continued)
-7-

	Goods of Jordan, under the terms of general note 18 to the tariff schedule:	
	Goods provided for in subheading 0401.30.25, 0401.30.75, 0402.10.50, 0402.21.25, 0402.21.50, 0402.21.90, 0402.29.50, 0402.91.70, 0402.91.90, 0402.99.45, 0402.99.55, 0402.99.90, 0403.10.50, 0403.90.16, 0403.90.45, 0403.90.55, 0403.90.65, 0403.90.78, 0403.90.95, 0404.10.15, 0404.10.90, 0404.90.50, 0405.10.20, 0405.20.30, 0405.20.70, 0405.90.20, 0406.10.08, 0406.10.18, 0406.10.28, 0406.10.38, 0406.10.48, 0406.10.58, 0406.10.68, 0406.10.78, 0406.10.88, 0406.20.28, 0406.20.33, 0406.20.39, 0406.20.48, 0406.20.53, 0406.20.63, 0406.20.67, 0406.20.71, 0406.20.75, 0406.20.79, 0406.20.83, 0406.20.87, 0406.20.91, 0406.30.18, 0406.30.28, 0406.30.38, 0406.30.48, 0406.30.53, 0406.30.63, 0406.30.67, 0406.30.71, 0406.30.75, 0406.30.79, 0406.30.83, 0406.30.87, 0406.30.91, 0406.40.70, 0406.90.12, 0406.90.18, 0406.90.32, 0406.90.37, 0406.90.42, 0406.90.48, 0406.90.54, 0406.90.68, 0406.90.74, 0406.90.78, 0406.90.84, 0406.90.88, 0406.90.92, 0406.90.94, 0406.90.97, 1517.90.60, 1806.10.15, 1806.10.75, 1806.20.26, 1806.20.28, 1806.20.36, 1806.20.38, 1806.20.82, 1806.20.83, 1806.20.87, 1806.20.89, 1806.32.06, 1806.32.08, 1806.32.16, 1806.32.18, 1806.32.70, 1806.32.80, 1806.90.08, 1806.90.10, 1806.90.18, 1806.90.20, 1806.90.28, 1806.90.30, 1901.10.30, 1901.10.40, 1901.10.75, 1901.10.85, 1901.20.15, 1901.20.35, 1901.20.50, 1901.20.70, 1901.90.36, 1901.90.43, 1901.90.47, 2103.90.78, 2105.00.40, 2106.90.09, 2106.90.26, 2106.90.36, 2106.90.66, 2106.90.87, 2202.90.28, 2309.90.28 or 2309.90.48:	
9909.04.05	Subject to the quantitative limits specified in U.S. note 3 to this subchapter.....	Free (JO)
	Other:	
9909.04.10	Goods provided for in subheading 0401.30.75.....	[See Annex II(B) to this proclamation](JO)
9909.04.11	Goods provided for in subheading 0401.30.25 or 0403.90.16.....	[See Annex II(B) to this proclamation](JO)
9909.04.12	Goods provided for in subheading 0403.90.78.....	[See Annex II(B) to this proclamation](JO)
9909.04.13	Goods provided for in subheading 0402.10.50 or 0402.21.25.....	[See Annex II(B) to this proclamation](JO)
9909.04.14	Goods provided for in subheading 0402.21.50 or 0403.90.55.....	[See Annex II(B) to this proclamation](JO)

Annex I (continued)
-8-

	[Goods of Jordan, under...]	
	[Goods provided for in subheading 0401.30.25...]	
	[Other:]	
9909.04.15	Goods provided for in subheading 0402.21.90 or 0403.90.65	[See Annex II(B) to this proclamation](JO)
9909.04.16	Goods provided for in subheading 0402.29.50	[See Annex II(B) to this proclamation](JO)
9909.04.17	Goods provided for in subheading 0402.91.70 or 0402.91.90	[See Annex II(B) to this proclamation](JO)
9909.04.18	Goods provided for in subheading 0402.99.45 or 0402.99.55	[See Annex II(B) to this proclamation](JO)
9909.04.19	Goods provided for in subheading 0402.99.90	[See Annex II(B) to this proclamation](JO)
9909.04.20	Goods provided for in subheading 0403.10.50	[See Annex II(B) to this proclamation](JO)
9909.04.21	Goods provided for in subheading 0403.90.45 or 0404.10.90	[See Annex II(B) to this proclamation](JO)
9909.04.22	Goods provided for in subheading 0403.90.95	[See Annex II(B) to this proclamation](JO)
9909.04.23	Goods provided for in subheading 0404.10.15	[See Annex II(B) to this proclamation](JO)
9909.04.24	Goods provided for in subheading 0404.90.50	[See Annex II(B) to this proclamation](JO)
9909.04.25	Goods provided for in subheading 0405.10.20	[See Annex II(B) to this proclamation](JO)
9909.04.26	Goods provided for in subheading 0405.20.30, 2106.90.26 or 2106.90.36	[See Annex II(B) to this proclamation](JO)
9909.04.27	Goods provided for in subheading 0405.20.70 or 2106.90.66	[See Annex II(B) to this proclamation](JO)
9909.04.28	Goods provided for in subheading 0405.90.20	[See Annex II(B) to this proclamation](JO)

Annex I (continued)
-9-

	[Goods of Jordan, under...]	
	[Goods provided for in subheading 0401.30.25...]	
	[Other:]	
9909.04.29	Goods provided for in subheading 0406.10.08, 0406.10.88, 0406.20.91, 0406.30.91 or 0406.90.97	[See Annex II(B) to this proclamation](JO)
9909.04.30	Goods provided for in subheading 0406.10.18, 0406.20.28, 0406.20.63, 0406.30.18, 0406.30.63, 0406.40.70 or 0406.90.74	[See Annex II(B) to this proclamation](JO)
9909.04.31	Goods provided for in subheading 0406.10.28, 0406.20.33, 0406.20.67, 0406.30.28, 0406.30.67, 0406.90.12 or 0406.90.78	[See Annex II(B) to this proclamation](JO)
9909.04.32	Goods provided for in subheading 0406.10.38, 0406.20.39, 0406.20.71, 0406.30.38, 0406.30.71, 0406.90.54 or 0406.90.84	[See Annex II(B) to this proclamation](JO)
9909.04.33	Goods provided for in subheading 0406.10.48, 0406.20.48, 0406.20.75, 0406.30.48, 0406.30.75, 0406.90.18 or 0406.90.88	[See Annex II(B) to this proclamation](JO)
9909.04.34	Goods provided for in subheading 0406.10.58, 0406.20.53, 0406.20.79, 0406.30.79, 0406.90.32, 0406.90.37, 0406.90.42 or 0406.90.68	[See Annex II(B) to this proclamation](JO)
9909.04.35	Goods provided for in subheading 0406.10.68, 0406.20.83, 0406.30.53 0406.30.83 or 0406.90.92	[See Annex II(B) to this proclamation](JO)
9909.04.36	Goods provided for in subheading 0406.10.78, 0406.20.87, 0406.30.87, 0406.90.94 or 1901.90.36	[See Annex II(B) to this proclamation](JO)
9909.04.37	Goods provided for in subheading 0406.90.48	[See Annex II(B) to this proclamation](JO)
9909.04.38	Goods provided for in subheading 1517.90.60	[See Annex II(B) to this proclamation](JO)
9909.04.39	Goods provided for in subheading 1806.10.15	[See Annex II(B) to this proclamation](JO)

Annex I (continued)
-10-

	[Goods of Jordan, under...]	
	[Goods provided for in subheading 0401.30.25...]	
	[Other:]	
9909.04.40	Goods provided for in subheading 1806.10.75	[See Annex II(B) to this proclamation](JO)
9909.04.41	Goods provided for in subheading 1806.20.26, 1806.20.36, 1806.32.06 or 1806.32.16	[See Annex II(B) to this proclamation](JO)
9909.04.42	Goods provided for in subheading 1806.20.28, 1806.20.38, 1806.32.08 or 1806.32.18	[See Annex II(B) to this proclamation](JO)
9909.04.43	Goods provided for in subheading 1806.20.82 or 1806.20.87	[See Annex II(B) to this proclamation](JO)
9909.04.44	Goods provided for in subheading 1806.20.83 or 1806.20.89	[See Annex II(B) to this proclamation](JO)
9909.04.45	Goods provided for in subheading 1806.32.70, 1806.90.08, 1806.90.18 or 1806.90.28	[See Annex II(B) to this proclamation](JO)
9909.04.46	Goods provided for in subheading 1806.32.80, 1806.90.10, 1806.90.20 or 1806.90.30	[See Annex II(B) to this proclamation](JO)
9909.04.47	Goods provided for in subheading 1901.10.30, 1901.10.40, 1901.10.75 or 1901.10.85	[See Annex II(B) to this proclamation](JO)
9909.04.48	Goods provided for in subheading 1901.20.15, 1901.20.35, 1901.20.50 or 1901.20.70	[See Annex II(B) to this proclamation](JO)
9909.04.49	Goods provided for in subheading 1901.90.43 or 1901.90.47	[See Annex II(B) to this proclamation](JO)
9909.04.50	Goods provided for in subheading 2103.90.78	[See Annex II(B) to this proclamation](JO)
9909.04.51	Goods provided for in subheading 2105.00.40	[See Annex II(B) to this proclamation](JO)

Annex I (continued)
-11-

	[Goods of Jordan, under...]	
	[Goods provided for in subheading 0401.30.25...]	
	[Other:]	
9909.04.52	Goods provided for in subheading 2106.90.09	[See Annex II(B) to this proclamation](JO)
9909.04.53	Goods provided for in subheading 2106.90.87	[See Annex II(B) to this proclamation](JO)
9909.04.54	Goods provided for in subheading 2202.90.28	[See Annex II(B) to this proclamation](JO)
9909.04.55	Goods provided for in subheading 2309.90.28 or 2309.90.48	[See Annex II(B) to this proclamation](JO)
	Goods provided for in subheading 1202.10.80, 1202.20.80, 2008.11.15, 2008.11.35 or 2008.11.60:	
9909.12.05	Subject to the quantitative limits specified in U.S. note 4 to this subchapter	Free (JO)
	Other:	
9909.12.20	Goods provided for in subheading 1202.10.80	[See Annex II(B) to this proclamation](JO)
9909.12.40	Goods provided for in subheading 1202.20.80, 2008.11.15, 2008.11.35 or 2008.11.60	[See Annex II(B) to this proclamation](JO)
	Goods provided for in subheading 1701.11.50, 1701.12.50, 1701.91.30, 1701.91.48, 1701.91.58, 1701.99.50, 1702.20.28, 1702.30.28, 1702.40.28, 1702.60.28, 1702.90.20, 1702.90.58, 1702.90.68, 1704.90.58, 1704.90.68, 1704.90.78, 1806.10.28, 1806.10.38, 1806.10.55, 1806.20.73, 1806.20.77, 1806.20.94, 1806.20.98, 1806.90.39, 1806.90.49, 1806.90.59, 1901.20.25, 1901.20.60, 1901.90.54, 1901.90.58, 2101.12.38, 2101.12.48, 2101.12.58, 2101.20.38, 2101.20.48, 2101.20.58, 2106.90.46, 2106.90.72, 2106.90.76, 2106.90.80, 2106.90.91, 2106.90.94 or 2106.90.97:	
9909.17.05	Subject to the quantitative limits specified in U.S. note 5 to this subchapter	Free (JO)
	Other:	
9909.17.10	Goods provided for in subheading 1701.11.50	[See Annex II(B) to this proclamation](JO)
9909.17.15	Goods provided for in subheading 1701.12.50, 1701.91.30, 1701.99.50, 1702.90.20 or 2106.90.46	[See Annex II(B) to this proclamation](JO)

Annex I (continued)
-12-

	[Goods of Jordan, under...]	
	[Goods provided for in subheading 1701.11.50...]	
	[Other:]	
9909.17.20	Goods provided for in subheading 1701.91.48, 1701.91.58 or 1702.90.68.....	[See Annex II(B) to this proclamation](JO)
9909.17.25	Goods provided for in subheading 1702.20.28 or 1702.30.28.....	[See Annex II(B) to this proclamation](JO)
9909.17.30	Goods provided for in subheading 1702.40.28, 1702.60.28 or 1702.90.58.....	[See Annex II(B) to this proclamation](JO)
9909.17.35	Goods provided for in subheading 1704.90.58, 1704.90.68 or 1704.90.78.....	[See Annex II(B) to this proclamation](JO)
9909.17.40	Goods provided for in subheading 1806.10.28, 1806.10.38 or 1806.10.55.....	[See Annex II(B) to this proclamation](JO)
9909.17.45	Goods provided for in subheading 1806.20.73, 1806.20.77, 2101.12.38, 2101.12.48, 2101.12.58, 2101.20.38, 2101.20.48 or 2101.20.58.....	[See Annex II(B) to this proclamation](JO)
9909.17.50	Goods provided for in subheading 1806.20.94 or 1806.20.98.....	[See Annex II(B) to this proclamation](JO)
9909.17.55	Goods provided for in subheading 1806.90.39, 1806.90.49 or 1806.90.59.....	[See Annex II(B) to this proclamation](JO)
9909.17.60	Goods provided for in subheading 1901.20.25 or 1901.20.60.....	[See Annex II(B) to this proclamation](JO)
9909.17.65	Goods provided for in subheading 1901.90.54 or 1901.90.58.....	[See Annex II(B) to this proclamation](JO)
9909.17.70	Goods provided for in subheading 2106.90.72, 2106.90.76 or 2106.90.80.....	[See Annex II(B) to this proclamation](JO)
9909.17.75	Goods provided for in subheading 2106.90.91, 2106.90.94 or 2106.90.97.....	[See Annex II(B) to this proclamation](JO)
	Goods provided for in subheading 5201.00.18, 5201.00.28, 5201.00.38, 5201.00.80, 5202.99.30 or 5203.00.30:	
9909.52.05	Subject to the quantitative limits specified in U.S. note 6 to this subchapter.....	Free (JO)

Annex I (continued)
-13-

	[Goods of Jordan, under...]	
	[Goods provided for in subheading 5201.00.18...]	
	Other:	
9909.52.20	Goods provided for in subheading 5201.00.18, 5201.00.28, 5201.00.38 5201.00.80 or 5203.00.30.....	[See Annex III(B) to this proclamation](JO)
9909.52.40	Goods provided for in subheading 5202.99.30.....	[See Annex II(B) to this proclamation](JO)"

Annex II

Modifications to the Rates of Duty 1 Special Subcolumn
of the Harmonized Tariff Schedule of the United States (HTS)

Section A. Effective with respect to goods of Jordan, under the terms of general note 18 to the tariff schedule, entered, or withdrawn from warehouse for consumption, on or after December 17, 2001, the HTS is modified as follows.

(1). For the following provisions, in the Rates of Duty 1 Special subcolumn, insert in the parentheses following the "Free" rate in such subcolumn the symbol "JO" in alphabetical order:

0201.10.05	0402.21.73	0405.20.50	0406.30.32	0406.90.82
0201.10.10	0402.21.75	0405.20.60	0406.30.34	0406.90.86
0201.20.02	0402.29.05	0405.90.05	0406.30.42	0406.90.90
0201.20.04	0402.29.10	0405.90.10	0406.30.44	0406.90.93
0201.20.06	0402.91.03	0406.10.02	0406.30.49	0406.90.95
0201.20.10	0402.91.06	0406.10.04	0406.30.51	0910.40.30
0201.20.30	0402.91.10	0406.10.12	0406.30.56	0910.91.00
0201.20.50	0402.91.30	0406.10.14	0406.30.61	0910.99.60
0201.30.02	0402.99.03	0406.10.24	0406.30.65	1202.10.05
0201.30.04	0402.99.06	0406.10.34	0406.30.69	1202.10.40
0201.30.06	0402.99.10	0406.10.44	0406.30.73	1202.20.05
0201.30.10	0402.99.30	0406.10.54	0406.30.77	1202.20.40
0201.30.30	0402.99.68	0406.10.64	0406.30.81	1209.91.80
0201.30.50	0402.99.70	0406.10.74	0406.30.85	1209.99.40
0202.10.05	0403.10.05	0406.10.84	0406.30.89	1515.90.40
0202.10.10	0403.10.10	0406.20.22	0406.40.51	1517.90.45
0202.20.02	0403.90.02	0406.20.24	0406.40.52	1517.90.50
0202.20.04	0403.90.04	0406.20.29	0406.40.54	1701.11.05
0202.20.06	0403.90.37	0406.20.31	0406.40.58	1701.11.10
0202.20.10	0403.90.41	0406.20.34	0406.90.06	1701.12.05
0202.20.30	0403.90.47	0406.20.36	0406.90.08	1701.12.10
0202.20.50	0403.90.51	0406.20.43	0406.90.14	1701.91.05
0202.30.02	0403.90.57	0406.20.44	0406.90.16	1701.91.10
0202.30.04	0403.90.61	0406.20.49	0406.90.28	1701.91.42
0202.30.06	0403.90.72	0406.20.51	0406.90.31	1701.91.52
0202.30.10	0403.90.74	0406.20.56	0406.90.34	1701.91.54
0202.30.30	0403.90.87	0406.20.61	0406.90.36	1701.99.05
0202.30.50	0403.90.90	0406.20.65	0406.90.39	1701.99.10
0401.30.02	0404.10.08	0406.20.69	0406.90.41	1702.20.22
0401.30.05	0404.10.11	0406.20.73	0406.90.44	1702.30.22
0401.30.42	0404.10.48	0406.20.77	0406.90.46	1702.40.22
0401.30.50	0404.10.50	0406.20.81	0406.90.51	1702.60.22
0402.10.05	0404.90.28	0406.20.85	0406.90.52	1702.90.05
0402.10.10	0404.90.30	0406.20.89	0406.90.61	1702.90.10
0402.21.02	0405.10.05	0406.30.12	0406.90.63	1702.90.52
0402.21.05	0405.10.10	0406.30.14	0406.90.66	1702.90.90
0402.21.27	0405.20.10	0406.30.22	0406.90.72	1704.10.00
0402.21.30	0405.20.20	0406.30.24	0406.90.76	1704.90.35

Annex II (continued)
-2-

1704.90.52	1901.10.35	2103.90.72	2309.90.42	7114.19.00
1704.90.54	1901.10.55	2103.90.74	2309.90.44	8538.90.80
1704.90.74	1901.10.60	2103.90.90	2905.45.00	9020.00.90
1806.10.22	1901.10.80	2104.10.00	3307.30.10	9614.20.80
1806.10.34	1901.20.02	2105.00.05	3923.21.00	9801.00.70
1806.10.43	1901.20.05	2105.00.10	3923.30.00	9801.00.80
1806.10.65	1901.20.30	2105.00.25	3924.10.50	9802.00.40
1806.20.22	1901.20.42	2105.00.30	4016.99.60	9802.00.50
1806.20.24	1901.20.45	2106.90.03	4414.00.00	9812.00.20
1806.20.34	1901.20.65	2106.90.06	4420.10.00	9812.00.40
1806.20.67	1901.90.33	2106.90.22	5201.00.22	9813.00.05
1806.20.75	1901.90.34	2106.90.24	5201.00.24	9813.00.10
1806.20.79	1901.90.38	2106.90.32	5201.00.34	9813.00.15
1806.20.81	1901.90.42	2106.90.34	5201.00.55	9813.00.20
1806.20.85	1901.90.44	2106.90.42	5201.00.60	9813.00.25
1806.20.95	1901.90.46	2106.90.44	5203.00.05	9813.00.30
1806.32.01	1901.90.48	2106.90.62	5203.00.10	9813.00.35
1806.32.04	1901.90.56	2106.90.64	5702.10.10	9813.00.40
1806.32.14	2005.70.25	2106.90.78	5702.91.20	9813.00.45
1806.32.55	2007.99.75	2106.90.83	6802.10.00	9813.00.50
1806.32.60	2008.11.22	2106.90.85	6802.91.05	9813.00.55
1806.90.01	2008.11.25	2106.90.95	6802.91.15	9813.00.60
1806.90.05	2008.11.42	2106.90.99	6802.92.00	9813.00.70
1806.90.15	2008.11.45	2202.10.00	6913.90.50	9813.00.75
1806.90.25	2101.12.32	2202.90.22	7113.11.50	9814.00.50
1806.90.55	2101.12.54	2202.90.24	7113.19.21	9818.00.05
1901.10.05	2101.20.32	2309.90.22	7113.19.29	9818.00.07
1901.10.15	2101.20.54	2309.90.24	7113.19.50	

(2). The Rates of Duty 1 Special subcolumn is modified by inserting in such subcolumn, for each of the provisions listed in column A below, the phrase in column B opposite such provision.

Column A	Column B
0401.30.25	See 9909.04.05, 9909.04.11 (JO)
0401.30.75	See 9909.04.05, 9909.04.10 (JO)
0402.10.50	See 9909.04.05, 9909.04.13 (JO)
0402.21.25	See 9909.04.05, 9909.04.13 (JO)
0402.21.50	See 9909.04.05, 9909.04.14 (JO)
0402.21.90	See 9909.04.05, 9909.04.15 (JO)
0402.29.50	See 9909.04.05, 9909.04.16 (JO)
0402.91.70	See 9909.04.05, 9909.04.17 (JO)
0402.91.90	See 9909.04.05, 9909.04.17 (JO)
0402.99.45	See 9909.04.05, 9909.04.18 (JO)
0402.99.55	See 9909.04.05, 9909.04.18 (JO)
0402.99.90	See 9909.04.05, 9909.04.19 (JO)
0403.10.50	See 9909.04.05, 9909.04.20 (JO)
0403.90.16	See 9909.04.05, 9909.04.11 (JO)
0403.90.45	See 9909.04.05, 9909.04.21 (JO)

Annex II (continued)
-3-

0403.90.55	See 9909.04.05, 9909.04.14 (JO)
0403.90.65	See 9909.04.05, 9909.04.15 (JO)
0403.90.78	See 9909.04.05, 9909.04.12 (JO)
0403.90.95	See 9909.04.05, 9909.04.22 (JO)
0404.10.15	See 9909.04.05, 9909.04.23 (JO)
0404.10.90	See 9909.04.05, 9909.04.21 (JO)
0404.90.50	See 9909.04.05, 9909.04.24 (JO)
0405.10.20	See 9909.04.05, 9909.04.25 (JO)
0405.20.30	See 9909.04.05, 9909.04.26 (JO)
0405.20.70	See 9909.04.05, 9909.04.27 (JO)
0405.90.20	See 9909.04.05, 9909.04.28 (JO)
0406.10.08	See 9909.04.05, 9909.04.29 (JO)
0406.10.18	See 9909.04.05, 9909.04.30 (JO)
0406.10.28	See 9909.04.05, 9909.04.31 (JO)
0406.10.38	See 9909.04.05, 9909.04.32 (JO)
0406.10.48	See 9909.04.05, 9909.04.33 (JO)
0406.10.58	See 9909.04.05, 9909.04.34 (JO)
0406.10.68	See 9909.04.05, 9909.04.35 (JO)
0406.10.78	See 9909.04.05, 9909.04.36 (JO)
0406.10.88	See 9909.04.05, 9909.04.29 (JO)
0406.20.28	See 9909.04.05, 9909.04.30 (JO)
0406.20.33	See 9909.04.05, 9909.04.31 (JO)
0406.20.39	See 9909.04.05, 9909.04.32 (JO)
0406.20.48	See 9909.04.05, 9909.04.33 (JO)
0406.20.53	See 9909.04.05, 9909.04.34 (JO)
0406.20.63	See 9909.04.05, 9909.04.30 (JO)
0406.20.67	See 9909.04.05, 9909.04.31 (JO)
0406.20.71	See 9909.04.05, 9909.04.32 (JO)
0406.20.75	See 9909.04.05, 9909.04.33 (JO)
0406.20.79	See 9909.04.05, 9909.04.34 (JO)
0406.20.83	See 9909.04.05, 9909.04.35 (JO)
0406.20.87	See 9909.04.05, 9909.04.36 (JO)
0406.20.91	See 9909.04.05, 9909.04.29 (JO)
0406.30.18	See 9909.04.05, 9909.04.30 (JO)
0406.30.28	See 9909.04.05, 9909.04.31 (JO)
0406.30.38	See 9909.04.05, 9909.04.32 (JO)
0406.30.48	See 9909.04.05, 9909.04.33 (JO)
0406.30.53	See 9909.04.05, 9909.04.35 (JO)
0406.30.63	See 9909.04.05, 9909.04.30 (JO)
0406.30.67	See 9909.04.05, 9909.04.31 (JO)
0406.30.71	See 9909.04.05, 9909.04.32 (JO)
0406.30.75	See 9909.04.05, 9909.04.33 (JO)
0406.30.79	See 9909.04.05, 9909.04.34 (JO)
0406.30.83	See 9909.04.05, 9909.04.35 (JO)
0406.30.87	See 9909.04.05, 9909.04.36 (JO)
0406.30.91	See 9909.04.05, 9909.04.29 (JO)
0406.40.70	See 9909.04.05, 9909.04.30 (JO)
0406.90.12	See 9909.04.05, 9909.04.31 (JO)

Annex II (continued)
-4-

0406.90.18	See 9909.04.05, 9909.04.33 (JO)
0406.90.32	See 9909.04.05, 9909.04.34 (JO)
0406.90.37	See 9909.04.05, 9909.04.34 (JO)
0406.90.42	See 9909.04.05, 9909.04.34 (JO)
0406.90.48	See 9909.04.05, 9909.04.37 (JO)
0406.90.54	See 9909.04.05, 9909.04.32 (JO)
0406.90.68	See 9909.04.05, 9909.04.34 (JO)
0406.90.74	See 9909.04.05, 9909.04.30 (JO)
0406.90.78	See 9909.04.05, 9909.04.31 (JO)
0406.90.84	See 9909.04.05, 9909.04.32 (JO)
0406.90.88	See 9909.04.05, 9909.04.33 (JO)
0406.90.92	See 9909.04.05, 9909.04.35 (JO)
0406.90.94	See 9909.04.05, 9909.04.36 (JO)
0406.90.97	See 9909.04.05, 9909.04.29 (JO)
1202.10.80	See 9909.12.05, 9909.12.20 (JO)
1202.20.80	See 9909.12.05, 9909.12.40 (JO)
1517.90.60	See 9909.04.05, 9909.04.38 (JO)
1701.11.50	See 9909.17.05, 9909.17.10 (JO)
1701.12.50	See 9909.17.05, 9909.17.15 (JO)
1701.91.30	See 9909.17.05, 9909.17.15 (JO)
1701.91.48	See 9909.17.05, 9909.17.20 (JO)
1701.91.58	See 9909.17.05, 9909.17.20 (JO)
1701.99.50	See 9909.17.05, 9909.17.15 (JO)
1702.20.28	See 9909.17.05, 9909.17.25 (JO)
1702.30.28	See 9909.17.05, 9909.17.25 (JO)
1702.40.28	See 9909.17.05, 9909.17.30 (JO)
1702.60.28	See 9909.17.05, 9909.17.30 (JO)
1702.90.20	See 9909.17.05, 9909.17.15 (JO)
1702.90.58	See 9909.17.05, 9909.17.30 (JO)
1702.90.68	See 9909.17.05, 9909.17.20 (JO)
1704.90.58	See 9909.17.05, 9909.17.35 (JO)
1704.90.68	See 9909.17.05, 9909.17.35 (JO)
1704.90.78	See 9909.17.05, 9909.17.35 (JO)
1806.10.15	See 9909.04.05, 9909.04.39 (JO)
1806.10.28	See 9909.17.05, 9909.17.40 (JO)
1806.10.38	See 9909.17.05, 9909.17.40 (JO)
1806.10.55	See 9909.17.05, 9909.17.40 (JO)
1806.10.75	See 9909.04.05, 9909.04.40 (JO)
1806.20.26	See 9909.04.05, 9909.04.41 (JO)
1806.20.28	See 9909.04.05, 9909.04.42 (JO)
1806.20.36	See 9909.04.05, 9909.04.41 (JO)
1806.20.38	See 9909.04.05, 9909.04.42 (JO)
1806.20.73	See 9909.17.05, 9909.17.45 (JO)
1806.20.77	See 9909.17.05, 9909.17.45 (JO)
1806.20.82	See 9909.04.05, 9909.04.43 (JO)
1806.20.83	See 9909.04.05, 9909.04.44 (JO)
1806.20.87	See 9909.04.05, 9909.04.43 (JO)
1806.20.89	See 9909.04.05, 9909.04.44 (JO)

Annex II (continued)
-5-

1806.20.94	See 9909.17.05, 9909.17.50 (JO)
1806.20.98	See 9909.17.05, 9909.17.50 (JO)
1806.32.06	See 9909.04.05, 9909.04.41 (JO)
1806.32.08	See 9909.04.05, 9909.04.42 (JO)
1806.32.16	See 9909.04.05, 9909.04.41 (JO)
1806.32.18	See 9909.04.05, 9909.04.42 (JO)
1806.32.70	See 9909.04.05, 9909.04.45 (JO)
1806.32.80	See 9909.04.05, 9909.04.46 (JO)
1806.90.08	See 9909.04.05, 9909.04.45 (JO)
1806.90.10	See 9909.04.05, 9909.04.46 (JO)
1806.90.18	See 9909.04.05, 9909.04.45 (JO)
1806.90.20	See 9909.04.05, 9909.04.46 (JO)
1806.90.28	See 9909.04.05, 9909.04.45 (JO)
1806.90.30	See 9909.04.05, 9909.04.46 (JO)
1806.90.39	See 9909.17.05, 9909.17.55 (JO)
1806.90.49	See 9909.17.05, 9909.17.55 (JO)
1806.90.59	See 9909.17.05, 9909.17.55 (JO)
1901.10.30	See 9909.04.05. 9909.04.47 (JO)
1901.10.40	See 9909.04.05, 9909.04.47 (JO)
1901.10.75	See 9909.04.05, 9909.04.47 (JO)
1901.10.85	See 9909.04.05, 9909.04.47 (JO)
1901.20.15	See 9909.04.05, 9909.04.48 (JO)
1901.20.25	See 9909.17.05, 9909.17.60 (JO)
1901.20.35	See 9909.04.05, 9909.04.48 (JO)
1901.20.50	See 9909.04.05, 9909.04.48 (JO)
1901.20.60	See 9909.17.05, 9909.17.60 (JO)
1901.20.70	See 9909.04.05, 9909.04.48 (JO)
1901.90.36	See 9909.04.05. 9909.04.36 (JO)
1901.90.43	See 9909.04.05, 9909.04.49 (JO)
1901.90.47	See 9909.04.05, 9909.04.49 (JO)
1901.90.54	See 9909.17.05, 9909.17.65 (JO)
1901.90.58	See 9909.17.05, 9909.17.65 (JO)
2008.11.15	See 9909.12.05, 9909.12.40 (JO)
2008.11.35	See 9909.12.05, 9909.12.40 (JO)
2008.11.60	See 9909.12.05, 9909.12.40 (JO)
2101.12.38	See 9909.17.05, 9909.17.45 (JO)
2101.12.48	See 9909.17.05, 9909.17.45 (JO)
2101.12.58	See 9909.17.05, 9909.17.45 (JO)
2101.20.38	See 9909.17.05, 9909.17.45 (JO)
2101.20.48	See 9909.17.05, 9909.17.45 (JO)
2101.20.58	See 9909.17.05, 9909.17.45 (JO)
2103.90.78	See 9909.04.05, 9909.04.50 (JO)
2105.00.40	See 9909.04.05, 9909.04.51 (JO)
2106.90.09	See 9909.04.05, 9909.04.52 (JO)
2106.90.26	See 9909.04.05, 9909.04.26 (JO)
2106.90.36	See 9909.04.05, 9909.04.26 (JO)
2106.90.46	See 9909.17.05, 9909.17.15 (JO)
2106.90.66	See 9909.04.05, 9909.04.27 (JO)

Annex II (continued)
-6-

2106.90.72	See 9909.17.05, 9909.17.70 (JO)
2106.90.76	See 9909.17.05, 9909.17.70 (JO)
2106.90.80	See 9909.17.05, 9909.17.70 (JO)
2106.90.87	See 9909.04.05, 9909.04.53 (JO)
2106.90.91	See 9909.17.05, 9909.17.75 (JO)
2106.90.94	See 9909.17.05, 9909.17.75 (JO)
2106.90.97	See 9909.17.05, 9909.17.75 (JO)
2202.90.28	See 9909.04.05, 9909.04.54 (JO)
2309.90.28	See 9909.04.05, 9909.04.55 (JO)
2309.90.48	See 9909.04.05, 9909.04.55 (JO)
5201.00.18	See 9909.52.05, 9909.52.20 (JO)
5201.00.28	See 9909.52.05, 9909.52.20 (JO)
5201.00.38	See 9909.52.05, 9909.52.20 (JO)
5201.00.80	See 9909.52.05, 9909.52.20 (JO)
5202.99.30	See 9909.52.05, 9909.52.40 (JO)
5203.00.30	See 9909.52.05, 9909.52.20 (JO)

(3). For subheading 2105.00.20 and heading 9817.61.01, in the Rates of Duty 1 Special subcolumn, insert a "Free" rate of duty followed by the symbol "JO" in parentheses.

(4). For subheading 5810.91.00, in the Rates of Duty 1 Special subcolumn, insert "See additional U.S. note 1" followed by the symbol "JO" in parentheses.

(5). For subheading 5810.92.10, in the Rates of Duty 1 Special subcolumn, insert in the parentheses following "See additional U.S. note 2" the symbol "JO" in alphabetical order.

(6). For subheading 5810.92.90, in the Rates of Duty 1 Special subcolumn, insert in the parentheses following "See additional U.S. note 3" the symbol "JO" in alphabetical order.

(7). For subheading 5810.99.10, in the Rates of Duty 1 Special subcolumn, insert "See additional U.S. note 4" followed by the symbol "JO" in parentheses.

(8). For subheading 5810.99.90, in the Rates of Duty 1 Special subcolumn, insert "See additional U.S. note 5" followed by the symbol "JO" in parentheses.

(9). For subheading 9802.00.60, in the Rates of Duty 1 Special subcolumn, insert in the parentheses following "A duty upon the value of such processing outside the United States (see U.S. note 3 of this subchapter)" the symbol "JO" in alphabetical order.

(10). For subheading 9802.00.80, in the Rates of Duty 1 Special subcolumn, insert in the parentheses following "A duty upon the full value of the imported article, less the cost or value of such products of the United States (see U.S. note 4 of this subchapter)" the symbol "JO" in alphabetical order.

Annex II (continued)
-7-

Section (B). Effective with respect to goods of Jordan, under the terms of general note 18 to the tariff schedule, entered, or withdrawn from warehouse for consumption, on or after December 17, 2001, and on January 1 of each of the successive years, for each of the enumerated subheadings in the following table, the Rates of Duty 1 Special subcolumn in the HTS is modified (i) by inserting in such subcolumn for each subheading the rate of duty specified for such subheading in the December 17, 2001 column followed by the symbol "JO" in parentheses, and (ii) for each of the subsequent dated columns the rates of duty that are followed by the symbol "JO" in parentheses are deleted and the rates of duty for such dated column are inserted in such subheadings in lieu thereof.

HTS Subheading	December 17, 2001	2002	2003	2004	2005	2006	2007	2008	2009	2010
0101.20.40	2.2%	Free	Free	Free	Free	Free	Free	Free	Free	Free
0102.90.40	0.5¢/kg	Free	Free	Free	Free	Free	Free	Free	Free	Free
0104.20.00	34¢/head	Free	Free	Free	Free	Free	Free	Free	Free	Free
0105.11.00	0.4¢ each	Free	Free	Free	Free	Free	Free	Free	Free	Free
0105.12.00	0.4¢ each	Free	Free	Free	Free	Free	Free	Free	Free	Free
0105.19.00	0.4¢ each	Free	Free	Free	Free	Free	Free	Free	Free	Free
0105.92.00	1¢/kg	Free	Free	Free	Free	Free	Free	Free	Free	Free
0105.93.00	1¢/kg	Free	Free	Free	Free	Free	Free	Free	Free	Free
0105.99.00	1¢/kg	Free	Free	Free	Free	Free	Free	Free	Free	Free
0106.00.10	0.9%	Free	Free	Free	Free	Free	Free	Free	Free	Free
0106.00.30	2.4%	Free	Free	Free	Free	Free	Free	Free	Free	Free
0201.10.50	23.7%	21.1%	18.4%	15.8%	13.2%	10.5%	7.9%	5.2%	2.6%	Free
0201.20.80	23.7%	21.1%	18.4%	15.8%	13.2%	10.5%	7.9%	5.2%	2.6%	Free
0201.30.80	23.7%	21.1%	18.4%	15.8%	13.2%	10.5%	7.9%	5.2%	2.6%	Free
0202.10.50	23.7%	21.1%	18.4%	15.8%	13.2%	10.5%	7.9%	5.2%	2.6%	Free
0202.20.80	23.7%	21.1%	18.4%	15.8%	13.2%	10.5%	7.9%	5.2%	2.6%	Free
0202.30.80	23.7%	21.1%	18.4%	15.8%	13.2%	10.5%	7.9%	5.2%	2.6%	Free
0203.12.10	0.7¢/kg	Free	Free	Free	Free	Free	Free	Free	Free	Free
0203.19.20	0.7¢/kg	Free	Free	Free	Free	Free	Free	Free	Free	Free
0203.22.10	0.7¢/kg	Free	Free	Free	Free	Free	Free	Free	Free	Free
0203.29.20	0.7¢/kg	Free	Free	Free	Free	Free	Free	Free	Free	Free
0204.10.00	0.3¢/kg	Free	Free	Free	Free	Free	Free	Free	Free	Free
0204.21.00	1.4¢/kg	Free	Free	Free	Free	Free	Free	Free	Free	Free
0204.22.20	0.3¢/kg	Free	Free	Free	Free	Free	Free	Free	Free	Free

Annex II (continued)
-8-

HTS Subheading	December 17, 2001	2002	2003	2004	2005	2006	2007	2008	2009	2010
0204.22.40	1.4¢/kg	Free	Free	Free	Free	Free	Free	Free	Free	Free
0204.23.20	0.3¢/kg	Free	Free	Free	Free	Free	Free	Free	Free	Free
0204.23.40	1.4¢/kg	Free	Free	Free	Free	Free	Free	Free	Free	Free
0204.30.00	0.3¢/kg	Free	Free	Free	Free	Free	Free	Free	Free	Free
0204.41.00	1.4¢/kg	Free	Free	Free	Free	Free	Free	Free	Free	Free
0204.42.20	0.3¢/kg	Free	Free	Free	Free	Free	Free	Free	Free	Free
0204.42.40	1.4¢/kg	Free	Free	Free	Free	Free	Free	Free	Free	Free
0204.43.20	0.3¢/kg	Free	Free	Free	Free	Free	Free	Free	Free	Free
0204.43.40	1.4¢/kg	Free	Free	Free	Free	Free	Free	Free	Free	Free
0207.11.00	4.4¢/kg	Free	Free	Free	Free	Free	Free	Free	Free	Free
0207.12.00	4.4¢/kg	Free	Free	Free	Free	Free	Free	Free	Free	Free
0207.13.00	14¢/kg	10.5¢/kg	7¢/kg	3.5¢/kg	Free	Free	Free	Free	Free	Free
0207.14.00	13.2¢/kg	8.8¢/kg	4.4¢/kg	Free	Free	Free	Free	Free	Free	Free
0207.24.00	7.5¢/kg	Free	Free	Free	Free	Free	Free	Free	Free	Free
0207.25.20	7¢/kg	5.2¢/kg	3.5¢/kg	1.7¢/kg	Free	Free	Free	Free	Free	Free
0207.25.40	7.5%	5%	2.5%	Free	Free	Free	Free	Free	Free	Free
0207.26.00	14¢/kg	10.5¢/kg	7¢/kg	3.5¢/kg	Free	Free	Free	Free	Free	Free
0207.27.00	15.8¢/kg	14¢/kg	12.3¢/kg	10.5¢/kg	8.8¢/kg	7¢/kg	5.2¢/kg	3.5¢/kg	1.7¢/kg	Free
0207.32.00	4.4¢/kg	Free	Free	Free	Free	Free	Free	Free	Free	Free
0207.33.00	4.4¢/kg	Free	Free	Free	Free	Free	Free	Free	Free	Free
0207.34.00	8.8¢/kg	Free	Free	Free	Free	Free	Free	Free	Free	Free
0207.35.00	8.8¢/kg	Free	Free	Free	Free	Free	Free	Free	Free	Free
0207.36.00	8.8¢/kg	Free	Free	Free	Free	Free	Free	Free	Free	Free
0208.10.00	4.8%	3.2%	1.6%	Free	Free	Free	Free	Free	Free	Free
0208.90.30	3.5¢/kg	Free	Free	Free	Free	Free	Free	Free	Free	Free
0208.90.40	4.8%	3.2%	1.6%	Free	Free	Free	Free	Free	Free	Free
0209.00.00	1.6%	Free	Free	Free	Free	Free	Free	Free	Free	Free
0210.11.00	0.7¢/kg	Free	Free	Free	Free	Free	Free	Free	Free	Free
0210.12.00	0.7¢/kg	Free	Free	Free	Free	Free	Free	Free	Free	Free
0210.19.00	0.7¢/kg	Free	Free	Free	Free	Free	Free	Free	Free	Free
0210.90.20	1.1%	Free	Free	Free	Free	Free	Free	Free	Free	Free

Annex II (continued)
-9-

HTS Subheading	December 17, 2001	2002	2003	2004	2005	2006	2007	2008	2009	2010
0210.90.40	1.1%	Free	Free	Free	Free	Free	Free	Free	Free	Free
0302.23.00	0.5¢/kg	Free	Free	Free	Free	Free	Free	Free	Free	Free
0302.69.10	1.5%	Free	Free	Free	Free	Free	Free	Free	Free	Free
0302.70.20	12%	9%	6%	3%	Free	Free	Free	Free	Free	Free
0303.33.00	0.5¢/kg	Free	Free	Free	Free	Free	Free	Free	Free	Free
0303.39.00	0.5¢/kg	Free	Free	Free	Free	Free	Free	Free	Free	Free
0303.71.00	0.5¢/kg	Free	Free	Free	Free	Free	Free	Free	Free	Free
0303.75.00	0.5¢/kg	Free	Free	Free	Free	Free	Free	Free	Free	Free
0303.80.20	12%	9%	6%	3%	Free	Free	Free	Free	Free	Free
0304.90.90	4.5%	3%	1.5%	Free	Free	Free	Free	Free	Free	Free
0305.10.40	4.5%	3%	1.5%	Free	Free	Free	Free	Free	Free	Free
0305.20.20	5.6%	3.7%	1.8%	Free	Free	Free	Free	Free	Free	Free
0305.30.20	2%	Free	Free	Free	Free	Free	Free	Free	Free	Free
0305.30.40	2.5%	Free	Free	Free	Free	Free	Free	Free	Free	Free
0305.41.00	2.5%	Free	Free	Free	Free	Free	Free	Free	Free	Free
0305.61.20	2%	Free	Free	Free	Free	Free	Free	Free	Free	Free
0305.63.20	2.5%	Free	Free	Free	Free	Free	Free	Free	Free	Free
0305.69.20	2.5%	Free	Free	Free	Free	Free	Free	Free	Free	Free
0305.69.40	1.5%	Free	Free	Free	Free	Free	Free	Free	Free	Free
0305.69.60	0.2%	Free	Free	Free	Free	Free	Free	Free	Free	Free
0306.14.20	5.6%	3.7%	1.8%	Free	Free	Free	Free	Free	Free	Free
0306.24.20	5.6%	3.7%	1.8%	Free	Free	Free	Free	Free	Free	Free
0307.60.00	2.5%	Free	Free	Free	Free	Free	Free	Free	Free	Free
0401.10.00	0.1¢/liter	Free	Free	Free	Free	Free	Free	Free	Free	Free
0401.20.20	0.2¢/liter	Free	Free	Free	Free	Free	Free	Free	Free	Free
0401.20.40	1.2¢/liter	0.9¢/liter	0.6¢/liter	0.3¢/liter	Free	Free	Free	Free	Free	Free
0403.10.90	13.6%	10.2%	6.8%	3.4%	Free	Free	Free	Free	Free	Free
0403.90.20	0.1¢/liter	Free	Free	Free	Free	Free	Free	Free	Free	Free
0403.90.85	13.6%	10.2%	6.8%	3.4%	Free	Free	Free	Free	Free	Free
0404.10.05	6.3%	4.2%	2.1%	Free	Free	Free	Free	Free	Free	Free
0404.10.20	0.1¢/liter	Free	Free	Free	Free	Free	Free	Free	Free	Free

Annex II (continued)
-10-

HTS Subheading	December 17, 2001	2002	2003	2004	2005	2006	2007	2008	2009	2010
0404.90.10	0.1¢/kg	Free	Free	Free	Free	Free	Free	Free	Free	Free
0404.90.70	6.3%	4.2%	2.1%	Free	Free	Free	Free	Free	Free	Free
0405.20.40	9.8¢/kg	6.5¢/kg	3.2¢/kg	Free	Free	Free	Free	Free	Free	Free
0405.20.80	4.8%	3.2%	1.6%	Free	Free	Free	Free	Free	Free	Free
0406.10.95	6.3%	4.2%	2.1%	Free	Free	Free	Free	Free	Free	Free
0406.20.10	6%	4%	2%	Free	Free	Free	Free	Free	Free	Free
0406.20.15	13.6%	10.2%	6.8%	3.4%	Free	Free	Free	Free	Free	Free
0406.20.54	7.2%	4.8%	2.4%	Free	Free	Free	Free	Free	Free	Free
0406.20.55	7.2%	4.8%	2.4%	Free	Free	Free	Free	Free	Free	Free
0406.20.57	6.3%	4.2%	2.1%	Free	Free	Free	Free	Free	Free	Free
0406.20.95	6.3%	4.2%	2.1%	Free	Free	Free	Free	Free	Free	Free
0406.30.05	13.6%	10.2%	6.8%	3.4%	Free	Free	Free	Free	Free	Free
0406.30.55	4.8%	Free	Free	Free	Free	Free	Free	Free	Free	Free
0406.30.57	6.3%	4.2%	2.1%	Free	Free	Free	Free	Free	Free	Free
0406.30.95	4.2%	Free	Free	Free	Free	Free	Free	Free	Free	Free
0406.40.20	1.3%	Free	Free	Free	Free	Free	Free	Free	Free	Free
0406.40.40	2.2%	Free	Free	Free	Free	Free	Free	Free	Free	Free
0406.40.44	10.2%	7.6%	5.1%	2.5%	Free	Free	Free	Free	Free	Free
0406.40.48	13.6%	10.2%	6.8%	3.4%	Free	Free	Free	Free	Free	Free
0406.90.05	5.4%	3.6%	1.8%	Free	Free	Free	Free	Free	Free	Free
0406.90.20	2.1%	Free	Free	Free	Free	Free	Free	Free	Free	Free
0406.90.25	6.3%	4.2%	2.1%	Free	Free	Free	Free	Free	Free	Free
0406.90.33	19.1%	17%	14.9%	12.7%	10.6%	8.5%	6.3%	4.2%	2.1%	Free
0406.90.38	9.7%	7.3%	4.8%	2.4%	Free	Free	Free	Free	Free	Free
0406.90.43	7.2%	4.8%	2.4%	Free	Free	Free	Free	Free	Free	Free
0406.90.49	4%	2.7%	1.3%	Free	Free	Free	Free	Free	Free	Free
0406.90.59	7.2%	4.8%	2.4%	Free	Free	Free	Free	Free	Free	Free
0406.90.99	6.3%	4.2%	2.1%	Free	Free	Free	Free	Free	Free	Free
0407.00.00	1.4¢/doz.	Free	Free	Free	Free	Free	Free	Free	Free	Free
0408.11.00	38¢/kg	28.5¢/kg	19¢/kg	9.5¢/kg	Free	Free	Free	Free	Free	Free
0408.19.00	7.2¢/kg	4.8¢/kg	2.4¢/kg	Free	Free	Free	Free	Free	Free	Free

Annex II (continued)
-11-

HTS Subheading	December 17, 2001	2002	2003	2004	2005	2006	2007	2008	2009	2010
0408.91.00	42.8¢/kg	38¢/kg	33.3¢/kg	28.5¢/kg	23.8¢/kg	19¢/kg	14.2¢/kg	9.5¢/kg	4.7¢/kg	Free
0408.99.00	7.2¢/kg	4.8¢/kg	2.4¢/kg	Free	Free	Free	Free	Free	Free	Free
0409.00.00	0.9¢/kg	Free	Free	Free	Free	Free	Free	Free	Free	Free
0410.00.00	0.5%	Free	Free	Free	Free	Free	Free	Free	Free	Free
0501.00.00	0.7%	Free	Free	Free	Free	Free	Free	Free	Free	Free
0502.10.00	0.4¢/kg	Free	Free	Free	Free	Free	Free	Free	Free	Free
0505.90.20	1.1%	Free	Free	Free	Free	Free	Free	Free	Free	Free
0509.00.00	1.5%	Free	Free	Free	Free	Free	Free	Free	Free	Free
0510.00.20	3.8%	2.5%	1.2%	Free	Free	Free	Free	Free	Free	Free
0511.99.40	0.5%	Free	Free	Free	Free	Free	Free	Free	Free	Free
0601.10.15	44.8¢/1000	Free	Free	Free	Free	Free	Free	Free	Free	Free
0601.10.30	19.2¢/1000	Free	Free	Free	Free	Free	Free	Free	Free	Free
0601.10.45	27.8¢/1000	Free	Free	Free	Free	Free	Free	Free	Free	Free
0601.10.60	67¢/1000	Free	Free	Free	Free	Free	Free	Free	Free	Free
0601.10.75	9.6¢/1000	Free	Free	Free	Free	Free	Free	Free	Free	Free
0601.10.85	72¢/1000	Free	Free	Free	Free	Free	Free	Free	Free	Free
0601.10.90	1.7%	Free	Free	Free	Free	Free	Free	Free	Free	Free
0601.20.10	19.2¢/1000	Free	Free	Free	Free	Free	Free	Free	Free	Free
0601.20.90	0.7%	Free	Free	Free	Free	Free	Free	Free	Free	Free
0602.10.00	2.4%	Free	Free	Free	Free	Free	Free	Free	Free	Free
0602.30.00	0.9%	Free	Free	Free	Free	Free	Free	Free	Free	Free
0602.90.30	0.7%	Free	Free	Free	Free	Free	Free	Free	Free	Free
0602.90.40	1.7%	Free	Free	Free	Free	Free	Free	Free	Free	Free
0602.90.50	0.7¢/kg	Free	Free	Free	Free	Free	Free	Free	Free	Free
0602.90.60	0.9%	Free	Free	Free	Free	Free	Free	Free	Free	Free
0602.90.90	2.4%	Free	Free	Free	Free	Free	Free	Free	Free	Free
0603.10.30	1.6%	Free	Free	Free	Free	Free	Free	Free	Free	Free
0603.10.60	3.4%	Free	Free	Free	Free	Free	Free	Free	Free	Free
0603.10.70	3.2%	Free	Free	Free	Free	Free	Free	Free	Free	Free
0603.10.80	3.2%	Free	Free	Free	Free	Free	Free	Free	Free	Free
0603.90.00	2%	Free	Free	Free	Free	Free	Free	Free	Free	Free

Annex II (continued)
-12-

HTS Subheading	December 17, 2001	2002	2003	2004	2005	2006	2007	2008	2009	2010
0604.99.60	5.2%	3.5%	1.7%	Free	Free	Free	Free	Free	Free	Free
0701.10.00	0.2¢/kg	Free	Free	Free	Free	Free	Free	Free	Free	Free
0701.90.10	0.2¢/kg	Free	Free	Free	Free	Free	Free	Free	Free	Free
0701.90.50	0.2¢/kg	Free	Free	Free	Free	Free	Free	Free	Free	Free
0702.00.20	1.9¢/kg	Free	Free	Free	Free	Free	Free	Free	Free	Free
0702.00.40	1.4¢/kg	Free	Free	Free	Free	Free	Free	Free	Free	Free
0702.00.60	1.4¢/kg	Free	Free	Free	Free	Free	Free	Free	Free	Free
0703.10.20	0.4¢/kg	Free	Free	Free	Free	Free	Free	Free	Free	Free
0703.10.30	0.4¢/kg	Free	Free	Free	Free	Free	Free	Free	Free	Free
0703.10.40	1.5¢/kg	Free	Free	Free	Free	Free	Free	Free	Free	Free
0703.20.00	0.2¢/kg	Free	Free	Free	Free	Free	Free	Free	Free	Free
0703.90.00	16%	12%	8%	4%	Free	Free	Free	Free	Free	Free
0704.10.20	1.2%	Free	Free	Free	Free	Free	Free	Free	Free	Free
0704.10.40	5%	Free	Free	Free	Free	Free	Free	Free	Free	Free
0704.10.60	7%	Free	Free	Free	Free	Free	Free	Free	Free	Free
0704.20.00	10%	7.5%	5%	2.5%	Free	Free	Free	Free	Free	Free
0704.90.20	0.2¢/kg	Free	Free	Free	Free	Free	Free	Free	Free	Free
0704.90.40	10%	Free	Free	Free	Free	Free	Free	Free	Free	Free
0705.11.20	0.2¢/kg	Free	Free	Free	Free	Free	Free	Free	Free	Free
0705.11.40	1.8¢/kg	Free	Free	Free	Free	Free	Free	Free	Free	Free
0705.19.20	0.2¢/kg	Free	Free	Free	Free	Free	Free	Free	Free	Free
0705.19.40	1.8¢/kg	Free	Free	Free	Free	Free	Free	Free	Free	Free
0705.21.00	Free	Free	Free	Free	Free	Free	Free	Free	Free	Free
0705.29.00	Free	Free	Free	Free	Free	Free	Free	Free	Free	Free
0706.10.05	7.4%	Free	Free	Free	Free	Free	Free	Free	Free	Free
0706.10.10	0.7¢/kg	Free	Free	Free	Free	Free	Free	Free	Free	Free
0706.10.20	0.3¢/kg	Free	Free	Free	Free	Free	Free	Free	Free	Free
0706.90.20	1.3%	Free	Free	Free	Free	Free	Free	Free	Free	Free
0706.90.30	0.9%	Free	Free	Free	Free	Free	Free	Free	Free	Free
0706.90.40	5%	Free	Free	Free	Free	Free	Free	Free	Free	Free
0707.00.20	2.1¢/kg	Free	Free	Free	Free	Free	Free	Free	Free	Free

Annex II (continued)
-13-

HTS Subheading	December 17, 2001	2002	2003	2004	2005	2006	2007	2008	2009	2010
0707.00.40	2.8¢/kg	Free	Free	Free	Free	Free	Free	Free	Free	Free
0707.00.50	2.8¢/kg	Free	Free	Free	Free	Free	Free	Free	Free	Free
0707.00.60	0.7¢/kg	Free	Free	Free	Free	Free	Free	Free	Free	Free
0708.10.20	0.2¢/kg	Free	Free	Free	Free	Free	Free	Free	Free	Free
0708.10.40	1.4¢/kg	Free	Free	Free	Free	Free	Free	Free	Free	Free
0708.20.10	1.1¢/kg	Free	Free	Free	Free	Free	Free	Free	Free	Free
0708.20.90	2.4¢/kg	Free	Free	Free	Free	Free	Free	Free	Free	Free
0708.90.05	0.5¢/kg	Free	Free	Free	Free	Free	Free	Free	Free	Free
0708.90.15	Free	Free	Free	Free	Free	Free	Free	Free	Free	Free
0708.90.30	0.4¢/kg	Free	Free	Free	Free	Free	Free	Free	Free	Free
0708.90.40	2.4¢/kg	Free	Free	Free	Free	Free	Free	Free	Free	Free
0709.10.00	9%	6.7%	4.5%	2.2%	Free	Free	Free	Free	Free	Free
0709.20.10	2.5%	Free	Free	Free	Free	Free	Free	Free	Free	Free
0709.20.90	10.6%	Free	Free	Free	Free	Free	Free	Free	Free	Free
0709.30.20	1.3¢/kg	Free	Free	Free	Free	Free	Free	Free	Free	Free
0709.30.40	0.9¢/kg	Free	Free	Free	Free	Free	Free	Free	Free	Free
0709.40.20	11.9%	8.9%	5.9%	2.9%	Free	Free	Free	Free	Free	Free
0709.40.40	0.1¢/kg	Free	Free	Free	Free	Free	Free	Free	Free	Free
0709.40.60	0.9¢/kg	Free	Free	Free	Free	Free	Free	Free	Free	Free
0709.51.00	4.4¢/kg + 10%	Free	Free	Free	Free	Free	Free	Free	Free	Free
0709.60.20	2.2¢/kg	Free	Free	Free	Free	Free	Free	Free	Free	Free
0709.60.40	2.3¢/kg	Free	Free	Free	Free	Free	Free	Free	Free	Free
0709.70.00	16%	12%	8%	4%	Free	Free	Free	Free	Free	Free
0709.90.05	9%	6.7%	4.5%	2.2%	Free	Free	Free	Free	Free	Free
0709.90.10	4.2%	2.8%	1.4%	Free	Free	Free	Free	Free	Free	Free
0709.90.14	10%	Free	Free	Free	Free	Free	Free	Free	Free	Free
0709.90.20	0.7¢/kg	Free	Free	Free	Free	Free	Free	Free	Free	Free
0709.90.30	6%	4%	2%	Free	Free	Free	Free	Free	Free	Free
0709.90.35	4.4¢/kg	Free	Free	Free	Free	Free	Free	Free	Free	Free
0709.90.45	19.1%	17%	14.9%	12.7%	10.6%	8.5%	6.3%	4.2%	2.1%	Free
0709.90.90	10%	Free	Free	Free	Free	Free	Free	Free	Free	Free

Annex II (continued)
-14-

HTS Subheading	December 17, 2001	2002	2003	2004	2005	2006	2007	2008	2009	2010
0710.10.00	7%	Free	Free	Free	Free	Free	Free	Free	Free	Free
0710.21.20	0.5¢/kg	Free	Free	Free	Free	Free	Free	Free	Free	Free
0710.21.40	1¢/kg	Free	Free	Free	Free	Free	Free	Free	Free	Free
0710.22.10	1.1¢/kg	Free	Free	Free	Free	Free	Free	Free	Free	Free
0710.22.15	2.4¢/kg	Free	Free	Free	Free	Free	Free	Free	Free	Free
0710.22.25	2.4¢/kg	Free	Free	Free	Free	Free	Free	Free	Free	Free
0710.22.37	2.4¢/kg	Free	Free	Free	Free	Free	Free	Free	Free	Free
0710.22.40	8.9%	6.7%	4.4%	2.2%	Free	Free	Free	Free	Free	Free
0710.29.05	0.5¢/kg	Free	Free	Free	Free	Free	Free	Free	Free	Free
0710.29.15	Free	Free	Free	Free	Free	Free	Free	Free	Free	Free
0710.29.30	0.4¢/kg	Free	Free	Free	Free	Free	Free	Free	Free	Free
0710.29.40	1.7¢/kg	Free	Free	Free	Free	Free	Free	Free	Free	Free
0710.30.00	7%	Free	Free	Free	Free	Free	Free	Free	Free	Free
0710.40.00	11.2%	8.4%	5.6%	2.8%	Free	Free	Free	Free	Free	Free
0710.80.20	2.8¢/kg + 4%	Free	Free	Free	Free	Free	Free	Free	Free	Free
0710.80.40	1.4¢/kg	Free	Free	Free	Free	Free	Free	Free	Free	Free
0710.80.45	1¢/kg	Free	Free	Free	Free	Free	Free	Free	Free	Free
0710.80.50	1¢/kg	Free	Free	Free	Free	Free	Free	Free	Free	Free
0710.80.60	6%	4%	2%	Free	Free	Free	Free	Free	Free	Free
0710.80.65	10%	7.5%	5%	2.5%	Free	Free	Free	Free	Free	Free
0710.80.70	5.6%	Free	Free	Free	Free	Free	Free	Free	Free	Free
0710.80.85	7%	Free	Free	Free	Free	Free	Free	Free	Free	Free
0710.80.93	7.4%	Free	Free	Free	Free	Free	Free	Free	Free	Free
0710.80.97	7.4%	Free	Free	Free	Free	Free	Free	Free	Free	Free
0710.90.10	3.9%	Free	Free	Free	Free	Free	Free	Free	Free	Free
0710.90.90	7%	Free	Free	Free	Free	Free	Free	Free	Free	Free
0711.10.00	2.5%	Free	Free	Free	Free	Free	Free	Free	Free	Free
0711.20.18	1.8¢/kg on drained weight	Free	Free	Free	Free	Free	Free	Free	Free	Free
0711.20.28	2.9¢/kg on drained weight	Free	Free	Free	Free	Free	Free	Free	Free	Free

Annex II (continued)
-15-

HTS Subheading	December 17, 2001	2002	2003	2004	2005	2006	2007	2008	2009	2010
0711.20.38	2.9¢/kg on drained weight	Free	Free	Free	Free	Free	Free	Free	Free	Free
0711.20.40	4.3¢/kg on drained weight	Free	Free	Free	Free	Free	Free	Free	Free	Free
0711.30.00	4%	Free	Free	Free	Free	Free	Free	Free	Free	Free
0711.40.00	3.8%	Free	Free	Free	Free	Free	Free	Free	Free	Free
0711.90.40	2.8¢/kg on drained weight + 4%	Free	Free	Free	Free	Free	Free	Free	Free	Free
0711.90.60	3.8%	Free	Free	Free	Free	Free	Free	Free	Free	Free
0712.20.20	26.8%	23.8%	20.8%	17.8%	14.9%	11.9%	8.9%	5.9%	2.9%	Free
0712.20.40	19.1%	17%	14.9%	12.7%	10.6%	8.5%	6.3%	4.2%	2.1%	Free
0712.30.10	0.6¢/kg + 0.9%	Free	Free	Free	Free	Free	Free	Free	Free	Free
0712.30.20	0.9¢/kg + 1.3%	Free	Free	Free	Free	Free	Free	Free	Free	Free
0712.90.10	0.6%	Free	Free	Free	Free	Free	Free	Free	Free	Free
0712.90.15	2.7¢/kg	Free	Free	Free	Free	Free	Free	Free	Free	Free
0712.90.20	1.2¢/kg	Free	Free	Free	Free	Free	Free	Free	Free	Free
0712.90.30	1.1¢/kg	Free	Free	Free	Free	Free	Free	Free	Free	Free
0712.90.40	26.8%	23.8%	20.8%	17.8%	14.9%	11.9%	8.9%	5.9%	2.9%	Free
0712.90.65	1.9%	Free	Free	Free	Free	Free	Free	Free	Free	Free
0712.90.70	0.9%	Free	Free	Free	Free	Free	Free	Free	Free	Free
0712.90.74	6.5%	4.3%	2.1%	Free	Free	Free	Free	Free	Free	Free
0712.90.78	6.5%	4.3%	2.1%	Free	Free	Free	Free	Free	Free	Free
0712.90.80	6.2%	4.1%	2%	Free	Free	Free	Free	Free	Free	Free
0713.10.10	0.7¢/kg	Free	Free	Free	Free	Free	Free	Free	Free	Free
0713.10.40	0.2¢/kg	Free	Free	Free	Free	Free	Free	Free	Free	Free
0713.20.10	0.7¢/kg	Free	Free	Free	Free	Free	Free	Free	Free	Free
0713.20.20	0.7¢/kg	Free	Free	Free	Free	Free	Free	Free	Free	Free
0713.31.10	0.4¢/kg	Free	Free	Free	Free	Free	Free	Free	Free	Free
0713.31.40	0.1¢/kg	Free	Free	Free	Free	Free	Free	Free	Free	Free
0713.32.10	0.7¢/kg	Free	Free	Free	Free	Free	Free	Free	Free	Free
0713.32.20	0.6¢/kg	Free	Free	Free	Free	Free	Free	Free	Free	Free

Annex II (continued)
-16-

HTS Subheading	December 17, 2001	2002	2003	2004	2005	2006	2007	2008	2009	2010
0713.33.10	0.7¢/kg	Free	Free	Free	Free	Free	Free	Free	Free	Free
0713.33.20	0.5¢/kg	Free	Free	Free	Free	Free	Free	Free	Free	Free
0713.33.40	0.7¢/kg	Free	Free	Free	Free	Free	Free	Free	Free	Free
0713.39.10	0.7¢/kg	Free	Free	Free	Free	Free	Free	Free	Free	Free
0713.39.20	0.4¢/kg	Free	Free	Free	Free	Free	Free	Free	Free	Free
0713.39.40	0.4¢/kg	Free	Free	Free	Free	Free	Free	Free	Free	Free
0713.40.10	0.7¢/kg	Free	Free	Free	Free	Free	Free	Free	Free	Free
0713.40.20	Free	Free	Free	Free	Free	Free	Free	Free	Free	Free
0713.50.10	0.7¢/kg	Free	Free	Free	Free	Free	Free	Free	Free	Free
0713.50.20	0.6¢/kg	Free	Free	Free	Free	Free	Free	Free	Free	Free
0713.90.10	0.7¢/kg	Free	Free	Free	Free	Free	Free	Free	Free	Free
0713.90.60	0.4¢/kg	Free	Free	Free	Free	Free	Free	Free	Free	Free
0713.90.80	0.7¢/kg	Free	Free	Free	Free	Free	Free	Free	Free	Free
0714.10.10	5.9%	3.9%	1.9%	Free	Free	Free	Free	Free	Free	Free
0714.10.20	9%	6.7%	4.5%	2.2%	Free	Free	Free	Free	Free	Free
0714.20.10	4.5%	3%	1.5%	Free	Free	Free	Free	Free	Free	Free
0714.20.20	2.2%	Free	Free	Free	Free	Free	Free	Free	Free	Free
0714.90.10	1.1%	Free	Free	Free	Free	Free	Free	Free	Free	Free
0714.90.20	4.8%	3.2%	1.6%	Free	Free	Free	Free	Free	Free	Free
0714.90.40	12.8%	9.6%	6.4%	3.2%	Free	Free	Free	Free	Free	Free
0714.90.45	4.5%	3%	1.5%	Free	Free	Free	Free	Free	Free	Free
0714.90.60	6.2%	4.1%	2%	Free	Free	Free	Free	Free	Free	Free
0802.11.00	3.8¢/kg	Free	Free	Free	Free	Free	Free	Free	Free	Free
0802.12.00	18¢/kg	12¢/kg	6¢/kg	Free	Free	Free	Free	Free	Free	Free
0802.21.00	5.2¢/kg	3.5¢/kg	1.7¢/kg	Free	Free	Free	Free	Free	Free	Free
0802.22.00	7¢/kg	Free	Free	Free	Free	Free	Free	Free	Free	Free
0802.31.00	3.5¢/kg	Free	Free	Free	Free	Free	Free	Free	Free	Free
0802.32.00	19.8¢/kg	13.2¢/kg	6.6¢/kg	Free	Free	Free	Free	Free	Free	Free
0802.50.20	0.4¢/kg	Free	Free	Free	Free	Free	Free	Free	Free	Free
0802.50.40	0.9¢/kg	Free	Free	Free	Free	Free	Free	Free	Free	Free
0802.90.10	4.4¢/kg	Free	Free	Free	Free	Free	Free	Free	Free	Free

Annex II (continued)
-17-

HTS Subheading	December 17, 2001	2002	2003	2004	2005	2006	2007	2008	2009	2010
0802.90.15	8.8¢/kg	Free	Free	Free	Free	Free	Free	Free	Free	Free
0802.90.20	0.3¢/kg	Free	Free	Free	Free	Free	Free	Free	Free	Free
0802.90.25	0.5¢/kg	Free	Free	Free	Free	Free	Free	Free	Free	Free
0802.90.80	0.6¢/kg	Free	Free	Free	Free	Free	Free	Free	Free	Free
0802.90.94	2.5¢/kg	Free	Free	Free	Free	Free	Free	Free	Free	Free
0802.90.98	2.5¢/kg	Free	Free	Free	Free	Free	Free	Free	Free	Free
0803.00.40	0.7%	Free	Free	Free	Free	Free	Free	Free	Free	Free
0804.10.20	6.6¢/kg	Free	Free	Free	Free	Free	Free	Free	Free	Free
0804.10.40	0.5¢/kg	Free	Free	Free	Free	Free	Free	Free	Free	Free
0804.10.60	1.4¢/kg	Free	Free	Free	Free	Free	Free	Free	Free	Free
0804.10.80	14.9%	Free	Free	Free	Free	Free	Free	Free	Free	Free
0804.20.40	3.9¢/kg	Free	Free	Free	Free	Free	Free	Free	Free	Free
0804.20.60	3.1¢/kg	Free	Free	Free	Free	Free	Free	Free	Free	Free
0804.20.80	4.4¢/kg	Free	Free	Free	Free	Free	Free	Free	Free	Free
0804.30.20	0.2¢/kg	Free	Free	Free	Free	Free	Free	Free	Free	Free
0804.30.40	0.5¢/kg	Free	Free	Free	Free	Free	Free	Free	Free	Free
0804.30.60	0.2¢/kg	Free	Free	Free	Free	Free	Free	Free	Free	Free
0804.40.00	8.4¢/kg	5.6¢/kg	2.8¢/kg	Free	Free	Free	Free	Free	Free	Free
0804.50.40	4.9¢/kg	3.3¢/kg	1.6¢/kg	Free	Free	Free	Free	Free	Free	Free
0804.50.60	5.2¢/kg	3.9¢/kg	2.6¢/kg	1.3¢/kg	Free	Free	Free	Free	Free	Free
0804.50.80	0.7¢/kg	Free	Free	Free	Free	Free	Free	Free	Free	Free
0805.10.00	0.9¢/kg	Free	Free	Free	Free	Free	Free	Free	Free	Free
0805.20.00	0.9¢/kg	Free	Free	Free	Free	Free	Free	Free	Free	Free
0805.30.20	1.1¢/kg	Free	Free	Free	Free	Free	Free	Free	Free	Free
0805.30.40	1.3¢/kg	0.9¢/kg	0.4¢/kg	Free	Free	Free	Free	Free	Free	Free
0805.40.40	0.9¢/kg	Free	Free	Free	Free	Free	Free	Free	Free	Free
0805.40.60	0.7¢/kg	Free	Free	Free	Free	Free	Free	Free	Free	Free
0805.40.80	1.2¢/kg	Free	Free	Free	Free	Free	Free	Free	Free	Free
0805.90.00	0.4%	Free	Free	Free	Free	Free	Free	Free	Free	Free
0806.10.20	56.5¢/m^3	Free	Free	Free	Free	Free	Free	Free	Free	Free
0806.10.60	90¢/m^3	Free	Free	Free	Free	Free	Free	Free	Free	Free

Annex II (continued)
-18-

HTS Subheading	December 17, 2001	2002	2003	2004	2005	2006	2007	2008	2009	2010
0806.20.10	0.9¢/kg	Free	Free	Free	Free	Free	Free	Free	Free	Free
0806.20.20	1.4¢/kg	Free	Free	Free	Free	Free	Free	Free	Free	Free
0806.20.90	1.7¢/kg	Free	Free	Free	Free	Free	Free	Free	Free	Free
0807.11.30	6.7%	4.5%	2.2%	Free	Free	Free	Free	Free	Free	Free
0807.11.40	13.6%	10.2%	6.8%	3.4%	Free	Free	Free	Free	Free	Free
0807.19.10	10.2%	7.6%	5.1%	2.5%	Free	Free	Free	Free	Free	Free
0807.19.20	26.8%	23.8%	20.8%	17.8%	14.9%	11.9%	8.9%	5.9%	2.9%	Free
0807.19.50	0.8%	Free	Free	Free	Free	Free	Free	Free	Free	Free
0807.19.60	4.7%	3.1%	1.5%	Free	Free	Free	Free	Free	Free	Free
0807.19.70	4%	2.7%	1.3%	Free	Free	Free	Free	Free	Free	Free
0807.19.80	25.2%	22.4%	19.6%	16.8%	14%	11.2%	8.4%	5.6%	2.8%	Free
0807.20.00	4%	2.7%	1.3%	Free	Free	Free	Free	Free	Free	Free
0808.20.40	0.1¢/kg	Free	Free	Free	Free	Free	Free	Free	Free	Free
0809.10.00	0.1¢/kg	Free	Free	Free	Free	Free	Free	Free	Free	Free
0809.30.20	0.1¢/kg	Free	Free	Free	Free	Free	Free	Free	Free	Free
0809.40.40	0.2¢/kg	Free	Free	Free	Free	Free	Free	Free	Free	Free
0810.10.20	0.1¢/kg	Free	Free	Free	Free	Free	Free	Free	Free	Free
0810.10.40	0.5¢/kg	Free	Free	Free	Free	Free	Free	Free	Free	Free
0810.20.10	Free	Free	Free	Free	Free	Free	Free	Free	Free	Free
0810.90.40	1.1%	Free	Free	Free	Free	Free	Free	Free	Free	Free
0811.10.00	8.9%	6.7%	4.4%	2.2%	Free	Free	Free	Free	Free	Free
0811.20.20	2.2%	Free	Free	Free	Free	Free	Free	Free	Free	Free
0811.20.40	6.7%	4.5%	2.2%	Free	Free	Free	Free	Free	Free	Free
0811.90.10	1.7%	Free	Free	Free	Free	Free	Free	Free	Free	Free
0811.90.22	8.9%	6.7%	4.4%	2.2%	Free	Free	Free	Free	Free	Free
0811.90.25	1.6%	Free	Free	Free	Free	Free	Free	Free	Free	Free
0811.90.40	8.9%	6.7%	4.4%	2.2%	Free	Free	Free	Free	Free	Free
0811.90.50	0.1¢/kg	Free	Free	Free	Free	Free	Free	Free	Free	Free
0811.90.52	8.7%	6.5%	4.3%	2.1%	Free	Free	Free	Free	Free	Free
0811.90.55	8.9%	6.7%	4.4%	2.2%	Free	Free	Free	Free	Free	Free
0811.90.80	11.6%	8.7%	5.8%	2.9%	Free	Free	Free	Free	Free	Free

Annex II (continued)
-19-

HTS Subheading	December 17, 2001	2002	2003	2004	2005	2006	2007	2008	2009	2010
0812.10.00	10.7¢/kg	8¢/kg	5.3¢/kg	2.6¢/kg	Free	Free	Free	Free	Free	Free
0812.20.00	0.4¢/kg	Free	Free	Free	Free	Free	Free	Free	Free	Free
0812.90.10	8.9%	6.7%	4.4%	2.2%	Free	Free	Free	Free	Free	Free
0812.90.20	0.9¢/kg	Free	Free	Free	Free	Free	Free	Free	Free	Free
0812.90.30	1.3¢/kg	Free	Free	Free	Free	Free	Free	Free	Free	Free
0812.90.40	0.1¢/kg	Free	Free	Free	Free	Free	Free	Free	Free	Free
0812.90.90	Free	Free	Free	Free	Free	Free	Free	Free	Free	Free
0813.10.00	0.9¢/kg	Free	Free	Free	Free	Free	Free	Free	Free	Free
0813.20.10	1¢/kg	Free	Free	Free	Free	Free	Free	Free	Free	Free
0813.20.20	11.2%	8.4%	5.6%	2.8%	Free	Free	Free	Free	Free	Free
0813.30.00	0.3¢/kg	Free	Free	Free	Free	Free	Free	Free	Free	Free
0813.40.10	0.9%	Free	Free	Free	Free	Free	Free	Free	Free	Free
0813.40.15	1.7¢/kg	Free	Free	Free	Free	Free	Free	Free	Free	Free
0813.40.20	0.7¢/kg	Free	Free	Free	Free	Free	Free	Free	Free	Free
0813.40.30	7.9¢/kg	5.3¢/kg	2.6¢/kg	Free	Free	Free	Free	Free	Free	Free
0813.40.40	0.7¢/kg	Free	Free	Free	Free	Free	Free	Free	Free	Free
0813.40.80	5.1%	3.4%	1.7%	Free	Free	Free	Free	Free	Free	Free
0813.40.90	1.2%	Free	Free	Free	Free	Free	Free	Free	Free	Free
0813.50.00	11.2%	8.4%	5.6%	2.8%	Free	Free	Free	Free	Free	Free
0814.00.40	0.8¢/kg	Free	Free	Free	Free	Free	Free	Free	Free	Free
0814.00.80	0.8¢/kg	Free	Free	Free	Free	Free	Free	Free	Free	Free
0901.90.20	0.7¢/kg	Free	Free	Free	Free	Free	Free	Free	Free	Free
0902.10.10	4.8%	3.2%	1.6%	Free	Free	Free	Free	Free	Free	Free
0902.20.10	4.8%	3.2%	1.6%	Free	Free	Free	Free	Free	Free	Free
0904.20.20	1.5¢/kg	Free	Free	Free	Free	Free	Free	Free	Free	Free
0904.20.40	2.5¢/kg	Free	Free	Free	Free	Free	Free	Free	Free	Free
0904.20.60	1.2¢/kg	Free	Free	Free	Free	Free	Free	Free	Free	Free
0904.20.76	2.5¢/kg	Free	Free	Free	Free	Free	Free	Free	Free	Free
0908.20.20	3.7¢/kg	Free	Free	Free	Free	Free	Free	Free	Free	Free
0910.10.40	0.5¢/kg	Free	Free	Free	Free	Free	Free	Free	Free	Free
0910.40.40	1.6%	Free	Free	Free	Free	Free	Free	Free	Free	Free

Annex II (continued)
-20-

HTS Subheading	December 17, 2001	2002	2003	2004	2005	2006	2007	2008	2009	2010
0910.99.40	1.7%	Free	Free	Free	Free	Free	Free	Free	Free	Free
1001.10.00	0.3¢/kg	Free	Free	Free	Free	Free	Free	Free	Free	Free
1001.90.10	1.4%	Free	Free	Free	Free	Free	Free	Free	Free	Free
1001.90.20	0.1¢/kg	Free	Free	Free	Free	Free	Free	Free	Free	Free
1003.00.20	Free	Free	Free	Free	Free	Free	Free	Free	Free	Free
1003.00.40	Free	Free	Free	Free	Free	Free	Free	Free	Free	Free
1005.90.20	Free	Free	Free	Free	Free	Free	Free	Free	Free	Free
1005.90.40	0.1¢/kg	Free	Free	Free	Free	Free	Free	Free	Free	Free
1006.10.00	0.9¢/kg	Free	Free	Free	Free	Free	Free	Free	Free	Free
1006.20.20	0.4¢/kg	Free	Free	Free	Free	Free	Free	Free	Free	Free
1006.20.40	1¢/kg	Free	Free	Free	Free	Free	Free	Free	Free	Free
1006.30.10	8.9%	6.7%	4.4%	2.2%	Free	Free	Free	Free	Free	Free
1006.30.90	0.7¢/kg	Free	Free	Free	Free	Free	Free	Free	Free	Free
1006.40.00	0.2¢/kg	Free	Free	Free	Free	Free	Free	Free	Free	Free
1007.00.00	0.1¢/kg	Free	Free	Free	Free	Free	Free	Free	Free	Free
1008.20.00	0.1¢/kg	Free	Free	Free	Free	Free	Free	Free	Free	Free
1008.30.00	Free	Free	Free	Free	Free	Free	Free	Free	Free	Free
1008.90.00	0.5%	Free	Free	Free	Free	Free	Free	Free	Free	Free
1101.00.00	0.3¢/kg	Free	Free	Free	Free	Free	Free	Free	Free	Free
1102.10.00	0.1¢/kg	Free	Free	Free	Free	Free	Free	Free	Free	Free
1102.20.00	0.1¢/kg	Free	Free	Free	Free	Free	Free	Free	Free	Free
1102.30.00	Free	Free	Free	Free	Free	Free	Free	Free	Free	Free
1102.90.30	10.2%	7.6%	5.1%	2.5%	Free	Free	Free	Free	Free	Free
1102.90.60	6.7%	4.5%	2.2%	Free	Free	Free	Free	Free	Free	Free
1103.11.00	0.2¢/kg	Free	Free	Free	Free	Free	Free	Free	Free	Free
1103.12.00	0.4¢/kg	Free	Free	Free	Free	Free	Free	Free	Free	Free
1103.13.00	0.1¢/kg	Free	Free	Free	Free	Free	Free	Free	Free	Free
1103.14.00	Free	Free	Free	Free	Free	Free	Free	Free	Free	Free
1103.19.00	6.7%	4.5%	2.2%	Free	Free	Free	Free	Free	Free	Free
1104.11.00	1¢/kg	Free	Free	Free	Free	Free	Free	Free	Free	Free
1104.12.00	0.6¢/kg	Free	Free	Free	Free	Free	Free	Free	Free	Free

Annex II (continued)
-21-

HTS Subheading	December 17, 2001	2002	2003	2004	2005	2006	2007	2008	2009	2010
1104.19.00	0.2¢/kg	Free	Free	Free	Free	Free	Free	Free	Free	Free
1104.21.00	0.6%	Free	Free	Free	Free	Free	Free	Free	Free	Free
1104.22.00	0.2%	Free	Free	Free	Free	Free	Free	Free	Free	Free
1104.23.00	0.2¢/kg	Free	Free	Free	Free	Free	Free	Free	Free	Free
1104.29.00	1.3%	Free	Free	Free	Free	Free	Free	Free	Free	Free
1104.30.00	2.2%	Free	Free	Free	Free	Free	Free	Free	Free	Free
1105.10.00	0.8¢/kg	Free	Free	Free	Free	Free	Free	Free	Free	Free
1105.20.00	0.6¢/kg	Free	Free	Free	Free	Free	Free	Free	Free	Free
1106.10.00	6.2%	4.1%	2%	Free	Free	Free	Free	Free	Free	Free
1106.30.20	1.4%	Free	Free	Free	Free	Free	Free	Free	Free	Free
1106.30.40	7.2%	4.8%	2.4%	Free	Free	Free	Free	Free	Free	Free
1107.10.00	0.1¢/kg	Free	Free	Free	Free	Free	Free	Free	Free	Free
1107.20.00	0.2¢/kg	Free	Free	Free	Free	Free	Free	Free	Free	Free
1108.11.00	0.2¢/kg	Free	Free	Free	Free	Free	Free	Free	Free	Free
1108.12.00	0.2¢/kg	Free	Free	Free	Free	Free	Free	Free	Free	Free
1108.13.00	0.2¢/kg	Free	Free	Free	Free	Free	Free	Free	Free	Free
1108.20.00	1.3%	Free	Free	Free	Free	Free	Free	Free	Free	Free
1109.00.10	0.9%	Free	Free	Free	Free	Free	Free	Free	Free	Free
1109.00.90	5.1%	3.4%	1.7%	Free	Free	Free	Free	Free	Free	Free
1204.00.00	0.1¢/kg	Free	Free	Free	Free	Free	Free	Free	Free	Free
1205.00.00	0.2¢/kg	Free	Free	Free	Free	Free	Free	Free	Free	Free
1207.20.00	0.2¢/kg	Free	Free	Free	Free	Free	Free	Free	Free	Free
1207.91.00	Free	Free	Free	Free	Free	Free	Free	Free	Free	Free
1208.10.00	0.9%	Free	Free	Free	Free	Free	Free	Free	Free	Free
1208.90.00	0.7%	Free	Free	Free	Free	Free	Free	Free	Free	Free
1209.21.00	0.7¢/kg	Free	Free	Free	Free	Free	Free	Free	Free	Free
1209.22.20	0.8¢/kg	Free	Free	Free	Free	Free	Free	Free	Free	Free
1209.24.00	0.6¢/kg	Free	Free	Free	Free	Free	Free	Free	Free	Free
1209.25.00	0.7¢/kg	Free	Free	Free	Free	Free	Free	Free	Free	Free
1209.30.00	0.5¢/kg	Free	Free	Free	Free	Free	Free	Free	Free	Free
1209.91.10	2.9¢/kg	Free	Free	Free	Free	Free	Free	Free	Free	Free

Annex II (continued)
-22-

HTS Subheading	December 17, 2001	2002	2003	2004	2005	2006	2007	2008	2009	2010
1209.91.50	0.3¢/kg	Free	Free	Free	Free	Free	Free	Free	Free	Free
1210.10.00	6.6¢/kg	Free	Free	Free	Free	Free	Free	Free	Free	Free
1210.20.00	6.6¢/kg	Free	Free	Free	Free	Free	Free	Free	Free	Free
1211.90.40	2.4%	Free	Free	Free	Free	Free	Free	Free	Free	Free
1211.90.60	3.3¢/kg	Free	Free	Free	Free	Free	Free	Free	Free	Free
1212.30.00	0.7¢/kg	Free	Free	Free	Free	Free	Free	Free	Free	Free
1212.91.00	19.8¢/t	Free	Free	Free	Free	Free	Free	Free	Free	Free
1212.92.00	93¢/t	62¢/t	31¢/t	Free	Free	Free	Free	Free	Free	Free
1214.10.00	0.7%	Free	Free	Free	Free	Free	Free	Free	Free	Free
1301.90.40	0.6%	Free	Free	Free	Free	Free	Free	Free	Free	Free
1302.12.00	1.9%	Free	Free	Free	Free	Free	Free	Free	Free	Free
1302.13.00	80.1¢/kg	71.2¢/kg	62.3¢/kg	53.4¢/kg	44.5¢/kg	35.6¢/kg	26.7¢/kg	17.8¢/kg	8.9¢/kg	Free
1302.19.40	0.5%	Free	Free	Free	Free	Free	Free	Free	Free	Free
1302.39.00	1.6%	Free	Free	Free	Free	Free	Free	Free	Free	Free
1401.20.40	1%	Free	Free	Free	Free	Free	Free	Free	Free	Free
1401.90.20	2.2%	Free	Free	Free	Free	Free	Free	Free	Free	Free
1401.90.40	1.6%	Free	Free	Free	Free	Free	Free	Free	Free	Free
1402.90.10	0.2¢/kg	Free	Free	Free	Free	Free	Free	Free	Free	Free
1403.10.00	$2.475/t	Free	Free	Free	Free	Free	Free	Free	Free	Free
1403.90.40	1.1%	Free	Free	Free	Free	Free	Free	Free	Free	Free
1501.00.00	2.2¢/kg	1.5¢/kg	0.7¢/kg	Free	Free	Free	Free	Free	Free	Free
1502.00.00	0.2¢/kg	Free	Free	Free	Free	Free	Free	Free	Free	Free
1503.00.00	1¢/kg	Free	Free	Free	Free	Free	Free	Free	Free	Free
1504.10.40	1.2%	Free	Free	Free	Free	Free	Free	Free	Free	Free
1504.20.40	0.5¢/kg	Free	Free	Free	Free	Free	Free	Free	Free	Free
1504.20.60	1.1¢/kg + 3.7%	0.7¢/kg + 2.5%	0.3¢/kg + 1.2%	Free	Free	Free	Free	Free	Free	Free
1504.30.00	1.2¢/kg + 3.7%	0.8¢/kg + 2.5%	0.4¢/kg + 1.2%	Free	Free	Free	Free	Free	Free	Free
1505.10.00	0.6¢/kg	Free	Free	Free	Free	Free	Free	Free	Free	Free
1505.90.00	1.2%	Free	Free	Free	Free	Free	Free	Free	Free	Free
1506.00.00	1.1%	Free	Free	Free	Free	Free	Free	Free	Free	Free
1507.10.00	15.2%	11.4%	7.6%	3.8%	Free	Free	Free	Free	Free	Free

Annex II (continued)
-23-

HTS Subheading	December 17, 2001	2002	2003	2004	2005	2006	2007	2008	2009	2010
1507.90.40	15.2%	11.4%	7.6%	3.8%	Free	Free	Free	Free	Free	Free
1508.10.00	5.6¢/kg	3.7¢/kg	1.8¢/kg	Free	Free	Free	Free	Free	Free	Free
1508.90.00	3.7¢/kg	Free	Free	Free	Free	Free	Free	Free	Free	Free
1509.10.20	2.5¢/kg on contents and container	Free	Free	Free	Free	Free	Free	Free	Free	Free
1509.10.40	1.7¢/kg	Free	Free	Free	Free	Free	Free	Free	Free	Free
1509.90.20	2.5¢/kg on contents and container	Free	Free	Free	Free	Free	Free	Free	Free	Free
1509.90.40	1.7¢/kg	Free	Free	Free	Free	Free	Free	Free	Free	Free
1510.00.40	2.5¢/kg on contents and container	Free	Free	Free	Free	Free	Free	Free	Free	Free
1510.00.60	1.7¢/kg	Free	Free	Free	Free	Free	Free	Free	Free	Free
1512.11.00	1.2¢/kg + 2.5%	0.8¢/kg + 1.7%	0.4¢/kg + 0.8%	Free	Free	Free	Free	Free	Free	Free
1512.19.00	0.8¢/kg + 1.7%	Free	Free	Free	Free	Free	Free	Free	Free	Free
1512.21.00	4.4¢/kg	3.3¢/kg	2.2¢/kg	1.1¢/kg	Free	Free	Free	Free	Free	Free
1512.29.00	4.4¢/kg	3.3¢/kg	2.2¢/kg	1.1¢/kg	Free	Free	Free	Free	Free	Free
1514.10.90	4.8%	3.2%	1.6%	Free	Free	Free	Free	Free	Free	Free
1514.90.50	0.6¢/kg	Free	Free	Free	Free	Free	Free	Free	Free	Free
1514.90.90	4.8%	3.2%	1.6%	Free	Free	Free	Free	Free	Free	Free
1515.11.00	4.7¢/kg	3.1¢/kg	1.5¢/kg	Free	Free	Free	Free	Free	Free	Free
1515.19.00	3.1¢/kg	Free	Free	Free	Free	Free	Free	Free	Free	Free
1515.21.00	1.7%	Free	Free	Free	Free	Free	Free	Free	Free	Free
1515.29.00	1.7%	Free	Free	Free	Free	Free	Free	Free	Free	Free
1515.50.00	0.3¢/kg	Free	Free	Free	Free	Free	Free	Free	Free	Free
1515.60.00	1.1%	Free	Free	Free	Free	Free	Free	Free	Free	Free
1516.10.00	5.2¢/kg	3.5¢/kg	1.7¢/kg	Free	Free	Free	Free	Free	Free	Free
1516.20.10	5.7%	3.8%	1.9%	Free	Free	Free	Free	Free	Free	Free
1516.20.90	6.6¢/kg	4.4¢/kg	2.2¢/kg	Free	Free	Free	Free	Free	Free	Free
1517.10.00	9.2¢/kg	6.1¢/kg	3¢/kg	Free	Free	Free	Free	Free	Free	Free
1517.90.10	9%	Free	Free	Free	Free	Free	Free	Free	Free	Free

Annex II (continued)
-24-

HTS Subheading	December 17, 2001	2002	2003	2004	2005	2006	2007	2008	2009	2010
1517.90.20	6%	4%	2%	Free	Free	Free	Free	Free	Free	Free
1517.90.90	4.4¢/kg	Free	Free	Free	Free	Free	Free	Free	Free	Free
1518.00.20	3.1¢/kg	Free	Free	Free	Free	Free	Free	Free	Free	Free
1518.00.40	6%	4%	2%	Free	Free	Free	Free	Free	Free	Free
1521.90.20	2.4%	Free	Free	Free	Free	Free	Free	Free	Free	Free
1522.00.00	1.9%	Free	Free	Free	Free	Free	Free	Free	Free	Free
1601.00.20	0.4¢/kg	Free	Free	Free	Free	Free	Free	Free	Free	Free
1601.00.40	1.7%	Free	Free	Free	Free	Free	Free	Free	Free	Free
1601.00.60	1.6%	Free	Free	Free	Free	Free	Free	Free	Free	Free
1602.10.00	0.9%	Free	Free	Free	Free	Free	Free	Free	Free	Free
1602.20.20	2.4¢/kg	Free	Free	Free	Free	Free	Free	Free	Free	Free
1602.20.40	1.6%	Free	Free	Free	Free	Free	Free	Free	Free	Free
1602.31.00	4.8%	3.2%	1.6%	Free	Free	Free	Free	Free	Free	Free
1602.32.00	4.8%	3.2%	1.6%	Free	Free	Free	Free	Free	Free	Free
1602.39.00	4.8%	3.2%	1.6%	Free	Free	Free	Free	Free	Free	Free
1602.41.10	4.8%	3.2%	1.6%	Free	Free	Free	Free	Free	Free	Free
1602.41.20	2.6¢/kg	Free	Free	Free	Free	Free	Free	Free	Free	Free
1602.41.90	0.7¢/kg	Free	Free	Free	Free	Free	Free	Free	Free	Free
1602.42.20	2.1¢/kg	Free	Free	Free	Free	Free	Free	Free	Free	Free
1602.42.40	0.7¢/kg	Free	Free	Free	Free	Free	Free	Free	Free	Free
1602.49.10	1.6%	Free	Free	Free	Free	Free	Free	Free	Free	Free
1602.49.20	2.1¢/kg	Free	Free	Free	Free	Free	Free	Free	Free	Free
1602.49.40	0.7¢/kg	Free	Free	Free	Free	Free	Free	Free	Free	Free
1602.49.60	1.6%	Free	Free	Free	Free	Free	Free	Free	Free	Free
1602.49.90	4.8%	3.2%	1.6%	Free	Free	Free	Free	Free	Free	Free
1602.50.05	1.1%	Free	Free	Free	Free	Free	Free	Free	Free	Free
1602.50.09	2.2%	Free	Free	Free	Free	Free	Free	Free	Free	Free
1602.50.20	0.7%	Free	Free	Free	Free	Free	Free	Free	Free	Free
1602.50.60	0.9%	Free	Free	Free	Free	Free	Free	Free	Free	Free
1602.50.90	1.2%	Free	Free	Free	Free	Free	Free	Free	Free	Free
1602.90.10	1.3%	Free	Free	Free	Free	Free	Free	Free	Free	Free

Annex II (continued)
-25-

HTS Subheading	December 17, 2001	2002	2003	2004	2005	2006	2007	2008	2009	2010
1602.90.90	4.8%	3.2%	1.6%	Free	Free	Free	Free	Free	Free	Free
1603.00.10	6.3%	4.2%	2.1%	Free	Free	Free	Free	Free	Free	Free
1604.11.20	4.5%	3%	1.5%	Free	Free	Free	Free	Free	Free	Free
1604.12.20	2%	Free	Free	Free	Free	Free	Free	Free	Free	Free
1604.13.20	12%	9%	6%	3%	Free	Free	Free	Free	Free	Free
1604.13.30	16%	12%	8%	4%	Free	Free	Free	Free	Free	Free
1604.13.90	1.5%	Free	Free	Free	Free	Free	Free	Free	Free	Free
1604.14.10	31.5%	28%	24.5%	21%	17.5%	14%	10.5%	7%	3.5%	Free
1604.14.20	4.5%	3%	1.5%	Free	Free	Free	Free	Free	Free	Free
1604.14.30	10%	7.5%	5%	2.5%	Free	Free	Free	Free	Free	Free
1604.14.40	0.5¢/kg	Free	Free	Free	Free	Free	Free	Free	Free	Free
1604.14.50	4.5%	3%	1.5%	Free	Free	Free	Free	Free	Free	Free
1604.14.70	2.4%	Free	Free	Free	Free	Free	Free	Free	Free	Free
1604.14.80	4.5%	3%	1.5%	Free	Free	Free	Free	Free	Free	Free
1604.15.00	1.5%	Free	Free	Free	Free	Free	Free	Free	Free	Free
1604.16.40	2.5%	Free	Free	Free	Free	Free	Free	Free	Free	Free
1604.19.10	2%	Free	Free	Free	Free	Free	Free	Free	Free	Free
1604.19.20	2%	Free	Free	Free	Free	Free	Free	Free	Free	Free
1604.19.25	2.5%	Free	Free	Free	Free	Free	Free	Free	Free	Free
1604.19.30	2%	Free	Free	Free	Free	Free	Free	Free	Free	Free
1604.19.40	7.5%	5%	2.5%	Free	Free	Free	Free	Free	Free	Free
1604.19.50	8.4%	6.3%	4.2%	2.1%	Free	Free	Free	Free	Free	Free
1604.19.80	4.5%	3%	1.5%	Free	Free	Free	Free	Free	Free	Free
1604.20.05	7.5%	5%	2.5%	Free	Free	Free	Free	Free	Free	Free
1604.20.40	7.5%	5%	2.5%	Free	Free	Free	Free	Free	Free	Free
1604.20.50	5.6%	3.7%	1.8%	Free	Free	Free	Free	Free	Free	Free
1604.30.20	12%	9%	6%	3%	Free	Free	Free	Free	Free	Free
1605.10.05	7.5%	5%	2.5%	Free	Free	Free	Free	Free	Free	Free
1605.10.40	2.5%	Free	Free	Free	Free	Free	Free	Free	Free	Free
1605.20.05	2.5%	Free	Free	Free	Free	Free	Free	Free	Free	Free
1605.30.05	7.5%	5%	2.5%	Free	Free	Free	Free	Free	Free	Free

Annex II (continued)
-26-

HTS Subheading	December 17, 2001	2002	2003	2004	2005	2006	2007	2008	2009	2010
1605.90.10	7.5%	5%	2.5%	Free	Free	Free	Free	Free	Free	Free
1605.90.50	2.3%	Free	Free	Free	Free	Free	Free	Free	Free	Free
1605.90.55	2.5%	Free	Free	Free	Free	Free	Free	Free	Free	Free
1701.11.20	1.1¢/kg less 0.01¢/kg for each degree under 100 degrees (and fractions of a degree in proportion) but not less than 0.7¢/kg	0.8¢/kg less 0.01¢/kg for each degree under 100 degrees (and fractions of a degree in proportion) but not less than 0.5¢/kg	0.5¢/kg less 0.008¢/kg for each degree under 100 degrees (and fractions of a degree in proportion) but not less than 0.3¢/kg	0.2¢/kg less 0.004¢/kg for each degree under 100 degrees (and fractions of a degree in proportion) but not less than 0.1¢/kg	Free	Free	Free	Free	Free	Free
1701.91.80	3.8%	2.5%	1.2%	Free	Free	Free	Free	Free	Free	Free
1702.11.00	4.8%	3.2%	1.6%	Free	Free	Free	Free	Free	Free	Free
1702.19.00	4.8%	3.2%	1.6%	Free	Free	Free	Free	Free	Free	Free
1702.30.40	1.6¢/kg	1.1¢/kg	0.5¢/kg	Free	Free	Free	Free	Free	Free	Free
1702.40.40	3.8%	2.5%	1.2%	Free	Free	Free	Free	Free	Free	Free
1702.50.00	7.2%	4.8%	2.4%	Free	Free	Free	Free	Free	Free	Free
1702.60.40	3.8%	2.5%	1.2%	Free	Free	Free	Free	Free	Free	Free
1702.90.35	0.1¢/liter	Free	Free	Free	Free	Free	Free	Free	Free	Free
1702.90.40	0.1¢/liter	Free	Free	Free	Free	Free	Free	Free	Free	Free
1703.10.30	0.1¢/liter	Free	Free	Free	Free	Free	Free	Free	Free	Free
1703.10.50	Free	Free	Free	Free	Free	Free	Free	Free	Free	Free
1703.90.30	0.1¢/liter	Free	Free	Free	Free	Free	Free	Free	Free	Free
1703.90.50	Free	Free	Free	Free	Free	Free	Free	Free	Free	Free
1704.90.10	2.2%	Free	Free	Free	Free	Free	Free	Free	Free	Free
1704.90.90	8.3%	6.2%	4.1%	2%	Free	Free	Free	Free	Free	Free
1803.20.00	0.1¢/kg	Free	Free	Free	Free	Free	Free	Free	Free	Free
1805.00.00	0.2¢/kg	Free	Free	Free	Free	Free	Free	Free	Free	Free
1806.20.50	2.1%	Free	Free	Free	Free	Free	Free	Free	Free	Free
1806.20.60	1%	Free	Free	Free	Free	Free	Free	Free	Free	Free
1806.20.78	6.3%	4.2%	2.1%	Free	Free	Free	Free	Free	Free	Free

Annex II (continued)
-27-

HTS Subheading	December 17, 2001	2002	2003	2004	2005	2006	2007	2008	2009	2010
1806.20.99	6.3%	4.2%	2.1%	Free	Free	Free	Free	Free	Free	Free
1806.31.00	2.8%	Free	Free	Free	Free	Free	Free	Free	Free	Free
1806.32.30	2.1%	Free	Free	Free	Free	Free	Free	Free	Free	Free
1806.32.90	3%	Free	Free	Free	Free	Free	Free	Free	Free	Free
1806.90.90	3%	Free	Free	Free	Free	Free	Free	Free	Free	Free
1901.10.45	11.9%	8.9%	5.9%	2.9%	Free	Free	Free	Free	Free	Free
1901.10.95	11.9%	8.9%	5.9%	2.9%	Free	Free	Free	Free	Free	Free
1901.20.40	6.3%	4.2%	2.1%	Free	Free	Free	Free	Free	Free	Free
1901.20.80	6.3%	4.2%	2.1%	Free	Free	Free	Free	Free	Free	Free
1901.90.10	1.6¢/liter	Free	Free	Free	Free	Free	Free	Free	Free	Free
1901.90.20	7.2%	4.8%	2.4%	Free	Free	Free	Free	Free	Free	Free
1901.90.28	0.1¢/kg	Free	Free	Free	Free	Free	Free	Free	Free	Free
1901.90.32	8.9%	6.7%	4.4%	2.2%	Free	Free	Free	Free	Free	Free
1901.90.70	8.1%	6.1%	4%	2%	Free	Free	Free	Free	Free	Free
1901.90.90	4.8%	3.2%	1.6%	Free	Free	Free	Free	Free	Free	Free
1902.11.40	4.8%	3.2%	1.6%	Free	Free	Free	Free	Free	Free	Free
1902.19.40	4.8%	3.2%	1.6%	Free	Free	Free	Free	Free	Free	Free
1902.20.00	4.8%	3.2%	1.6%	Free	Free	Free	Free	Free	Free	Free
1902.30.00	4.8%	3.2%	1.6%	Free	Free	Free	Free	Free	Free	Free
1902.40.00	4.8%	3.2%	1.6%	Free	Free	Free	Free	Free	Free	Free
1903.00.40	0.4¢/kg	Free	Free	Free	Free	Free	Free	Free	Free	Free
1904.10.00	0.5%	Free	Free	Free	Free	Free	Free	Free	Free	Free
1904.20.10	4.2%	2.8%	1.4%	Free	Free	Free	Free	Free	Free	Free
1904.20.90	11.9%	8.9%	5.9%	2.9%	Free	Free	Free	Free	Free	Free
1904.90.00	11.2%	8.4%	5.6%	2.8%	Free	Free	Free	Free	Free	Free
1905.90.90	2.2%	Free	Free	Free	Free	Free	Free	Free	Free	Free
2001.10.00	4.8%	Free	Free	Free	Free	Free	Free	Free	Free	Free
2001.20.00	1.8%	Free	Free	Free	Free	Free	Free	Free	Free	Free
2001.90.10	4%	Free	Free	Free	Free	Free	Free	Free	Free	Free
2001.90.20	4%	Free	Free	Free	Free	Free	Free	Free	Free	Free
2001.90.25	8.1%	6.1%	4%	2%	Free	Free	Free	Free	Free	Free

Annex II (continued)
-28-

HTS Subheading	December 17, 2001	2002	2003	2004	2005	2006	2007	2008	2009	2010
2001.90.30	2.9%	Free	Free	Free	Free	Free	Free	Free	Free	Free
2001.90.33	3.8%	Free	Free	Free	Free	Free	Free	Free	Free	Free
2001.90.35	4%	Free	Free	Free	Free	Free	Free	Free	Free	Free
2001.90.39	4.8%	Free	Free	Free	Free	Free	Free	Free	Free	Free
2001.90.42	2.4¢/kg	Free	Free	Free	Free	Free	Free	Free	Free	Free
2001.90.45	0.7¢/kg	Free	Free	Free	Free	Free	Free	Free	Free	Free
2001.90.50	3.5¢/kg	Free	Free	Free	Free	Free	Free	Free	Free	Free
2001.90.60	11.2%	8.4%	5.6%	2.8%	Free	Free	Free	Free	Free	Free
2002.10.00	6.2%	Free	Free	Free	Free	Free	Free	Free	Free	Free
2002.90.40	5.8%	Free	Free	Free	Free	Free	Free	Free	Free	Free
2002.90.80	5.8%	Free	Free	Free	Free	Free	Free	Free	Free	Free
2003.10.00	3¢/kg on drained weight + 4.2%	Free	Free	Free	Free	Free	Free	Free	Free	Free
2004.10.40	4.8%	3.2%	1.6%	Free	Free	Free	Free	Free	Free	Free
2004.10.80	6%	4%	2%	Free	Free	Free	Free	Free	Free	Free
2004.90.10	1.6%	Free	Free	Free	Free	Free	Free	Free	Free	Free
2004.90.80	1¢/kg on entire contents of container	Free	Free	Free	Free	Free	Free	Free	Free	Free
2004.90.90	5.6%	Free	Free	Free	Free	Free	Free	Free	Free	Free
2005.10.00	8.9%	6.7%	4.4%	2.2%	Free	Free	Free	Free	Free	Free
2005.20.00	4.8%	3.2%	1.6%	Free	Free	Free	Free	Free	Free	Free
2005.51.20	0.7¢/kg on entire contents of container	Free	Free	Free	Free	Free	Free	Free	Free	Free
2005.51.40	1¢/kg on entire contents of container	Free	Free	Free	Free	Free	Free	Free	Free	Free
2005.59.00	0.7¢/kg on entire contents of container	Free	Free	Free	Free	Free	Free	Free	Free	Free
2005.60.00	11.9%	8.9%	5.9%	2.9%	Free	Free	Free	Free	Free	Free

Annex II (continued)
-29-

HTS Subheading	December 17, 2001	2002	2003	2004	2005	2006	2007	2008	2009	2010
2005.70.02	2.7¢/kg on drained weight	Free	Free	Free	Free	Free	Free	Free	Free	Free
2005.70.04	1.8¢/kg on drained weight	Free	Free	Free	Free	Free	Free	Free	Free	Free
2005.70.06	1.8¢/kg on drained weight	Free	Free	Free	Free	Free	Free	Free	Free	Free
2005.70.08	1.8¢/kg on drained weight	Free	Free	Free	Free	Free	Free	Free	Free	Free
2005.70.12	1.8¢/kg on drained weight	Free	Free	Free	Free	Free	Free	Free	Free	Free
2005.70.16	2.7¢/kg on drained weight	Free	Free	Free	Free	Free	Free	Free	Free	Free
2005.70.18	3.4¢/kg on drained weight	Free	Free	Free	Free	Free	Free	Free	Free	Free
2005.70.23	3.4¢/kg on drained weight	Free	Free	Free	Free	Free	Free	Free	Free	Free
2005.70.50	4.6¢/kg on drained weight	Free	Free	Free	Free	Free	Free	Free	Free	Free
2005.70.60	7.5¢/kg on drained weight	5¢/kg on drained weight	2.5¢/kg on drained weight	Free	Free	Free	Free	Free	Free	Free
2005.70.70	4.9¢/kg on drained weight	Free	Free	Free	Free	Free	Free	Free	Free	Free
2005.70.75	2.1¢/kg on drained weight	Free	Free	Free	Free	Free	Free	Free	Free	Free
2005.70.91	2.7¢/kg on drained weight	Free	Free	Free	Free	Free	Free	Free	Free	Free
2005.70.93	4.4¢/kg on drained weight	Free	Free	Free	Free	Free	Free	Free	Free	Free
2005.70.97	4.4¢/kg on drained weight	Free	Free	Free	Free	Free	Free	Free	Free	Free
2005.80.00	4.2%	2.8%	1.4%	Free	Free	Free	Free	Free	Free	Free
2005.90.10	4.8%	3.2%	1.6%	Free	Free	Free	Free	Free	Free	Free
2005.90.20	2.2%	Free	Free	Free	Free	Free	Free	Free	Free	Free
2005.90.30	2.4%	Free	Free	Free	Free	Free	Free	Free	Free	Free
2005.90.50	6%	4%	2%	Free	Free	Free	Free	Free	Free	Free

Annex II (continued)
-30-

HTS Subheading	December 17, 2001	2002	2003	2004	2005	2006	2007	2008	2009	2010
2005.90.55	11.9%	8.9%	5.9%	2.9%	Free	Free	Free	Free	Free	Free
2005.90.80	11.9%	8.9%	5.9%	2.9%	Free	Free	Free	Free	Free	Free
2005.90.85	0.4¢/kg on entire contents of container	Free	Free	Free	Free	Free	Free	Free	Free	Free
2005.90.97	8.9%	6.7%	4.4%	2.2%	Free	Free	Free	Free	Free	Free
2006.00.20	7.9¢/kg + 5.1%	5.9¢/kg + 3.8%	3.9¢/kg + 2.5%	1.9¢/kg + 1.2%	Free	Free	Free	Free	Free	Free
2006.00.30	1.2%	Free	Free	Free	Free	Free	Free	Free	Free	Free
2006.00.40	1%	Free	Free	Free	Free	Free	Free	Free	Free	Free
2006.00.50	12.8%	9.6%	6.4%	3.2%	Free	Free	Free	Free	Free	Free
2006.00.60	3¢/kg	Free	Free	Free	Free	Free	Free	Free	Free	Free
2006.00.70	6%	4%	2%	Free	Free	Free	Free	Free	Free	Free
2006.00.90	12.8%	9.6%	6.4%	3.2%	Free	Free	Free	Free	Free	Free
2007.10.00	9.6%	7.2%	4.8%	2.4%	Free	Free	Free	Free	Free	Free
2007.91.10	8.9%	6.7%	4.4%	2.2%	Free	Free	Free	Free	Free	Free
2007.91.40	1.7%	Free	Free	Free	Free	Free	Free	Free	Free	Free
2007.91.90	2.2%	Free	Free	Free	Free	Free	Free	Free	Free	Free
2007.99.05	0.9%	Free	Free	Free	Free	Free	Free	Free	Free	Free
2007.99.10	1.1%	Free	Free	Free	Free	Free	Free	Free	Free	Free
2007.99.15	0.7%	Free	Free	Free	Free	Free	Free	Free	Free	Free
2007.99.20	1.7%	Free	Free	Free	Free	Free	Free	Free	Free	Free
2007.99.25	2.2%	Free	Free	Free	Free	Free	Free	Free	Free	Free
2007.99.35	5.2%	3.5%	1.7%	Free	Free	Free	Free	Free	Free	Free
2007.99.40	2%	Free	Free	Free	Free	Free	Free	Free	Free	Free
2007.99.45	4.2%	2.8%	1.4%	Free	Free	Free	Free	Free	Free	Free
2007.99.48	9.6%	7.2%	4.8%	2.4%	Free	Free	Free	Free	Free	Free
2007.99.50	0.6%	Free	Free	Free	Free	Free	Free	Free	Free	Free
2007.99.55	11.2%	8.4%	5.6%	2.8%	Free	Free	Free	Free	Free	Free
2007.99.60	9.6%	7.2%	4.8%	2.4%	Free	Free	Free	Free	Free	Free
2007.99.65	7.5%	5%	2.5%	Free	Free	Free	Free	Free	Free	Free
2007.99.70	0.7%	Free	Free	Free	Free	Free	Free	Free	Free	Free
2008.19.15	0.5%	Free	Free	Free	Free	Free	Free	Free	Free	Free

Annex II (continued)
-31-

HTS Subheading	December 17, 2001	2002	2003	2004	2005	2006	2007	2008	2009	2010
2008.19.20	5.6¢/kg	Free	Free	Free	Free	Free	Free	Free	Free	Free
2008.19.25	4.9¢/kg	Free	Free	Free	Free	Free	Free	Free	Free	Free
2008.19.30	0.5¢/kg	Free	Free	Free	Free	Free	Free	Free	Free	Free
2008.19.40	16.3¢/kg	Free	Free	Free	Free	Free	Free	Free	Free	Free
2008.19.50	4.8%	3.2%	1.6%	Free	Free	Free	Free	Free	Free	Free
2008.19.85	20.1%	17.9%	15.6%	13.4%	11.2%	8.9%	6.7%	4.4%	2.2%	Free
2008.19.90	14.3%	10.7%	7.1%	3.5%	Free	Free	Free	Free	Free	Free
2008.20.00	0.1¢/kg	Free	Free	Free	Free	Free	Free	Free	Free	Free
2008.30.10	1¢/kg	Free	Free	Free	Free	Free	Free	Free	Free	Free
2008.30.20	2.1¢/kg	Free	Free	Free	Free	Free	Free	Free	Free	Free
2008.30.30	8.4¢/kg	5.6¢/kg	2.8¢/kg	Free	Free	Free	Free	Free	Free	Free
2008.30.35	8.9%	6.7%	4.4%	2.2%	Free	Free	Free	Free	Free	Free
2008.30.37	5.1%	3.4%	1.7%	Free	Free	Free	Free	Free	Free	Free
2008.30.40	0.7¢/kg	Free	Free	Free	Free	Free	Free	Free	Free	Free
2008.30.46	0.1¢/kg	Free	Free	Free	Free	Free	Free	Free	Free	Free
2008.30.48	0.1¢/kg	Free	Free	Free	Free	Free	Free	Free	Free	Free
2008.30.55	0.7¢/kg	Free	Free	Free	Free	Free	Free	Free	Free	Free
2008.30.60	0.4¢/kg	Free	Free	Free	Free	Free	Free	Free	Free	Free
2008.30.65	11.2%	8.4%	5.6%	2.8%	Free	Free	Free	Free	Free	Free
2008.30.70	0.5¢/kg	Free	Free	Free	Free	Free	Free	Free	Free	Free
2008.30.80	0.2¢/kg	Free	Free	Free	Free	Free	Free	Free	Free	Free
2008.30.85	11.2%	8.4%	5.6%	2.8%	Free	Free	Free	Free	Free	Free
2008.30.95	11.2%	8.4%	5.6%	2.8%	Free	Free	Free	Free	Free	Free
2008.40.00	12.2%	9.1%	6.1%	3%	Free	Free	Free	Free	Free	Free
2008.50.20	7.5%	5%	2.5%	Free	Free	Free	Free	Free	Free	Free
2008.50.40	26.8%	23.8%	20.8%	17.8%	14.9%	11.9%	8.9%	5.9%	2.9%	Free
2008.60.00	5.1¢/kg + 3.3%	3.4¢/kg + 2.2%	1.7¢/kg + 1.1%	Free	Free	Free	Free	Free	Free	Free
2008.70.00	13.6%	10.2%	6.8%	3.4%	Free	Free	Free	Free	Free	Free
2008.80.00	9.5%	7.1%	4.7%	2.3%	Free	Free	Free	Free	Free	Free
2008.91.00	0.4%	Free	Free	Free	Free	Free	Free	Free	Free	Free
2008.92.10	4.2%	2.8%	1.4%	Free	Free	Free	Free	Free	Free	Free

Annex II (continued)
-32-

HTS Subheading	December 17, 2001	2002	2003	2004	2005	2006	2007	2008	2009	2010
2008.92.90	11.9%	8.9%	5.9%	2.9%	Free	Free	Free	Free	Free	Free
2008.99.05	0.4¢/kg	Free	Free	Free	Free	Free	Free	Free	Free	Free
2008.99.10	7.9¢/kg	5.3¢/kg	2.6¢/kg	Free	Free	Free	Free	Free	Free	Free
2008.99.13	1.7%	Free	Free	Free	Free	Free	Free	Free	Free	Free
2008.99.15	0.4%	Free	Free	Free	Free	Free	Free	Free	Free	Free
2008.99.18	1.1%	Free	Free	Free	Free	Free	Free	Free	Free	Free
2008.99.20	2.2%	Free	Free	Free	Free	Free	Free	Free	Free	Free
2008.99.23	0.6%	Free	Free	Free	Free	Free	Free	Free	Free	Free
2008.99.25	20.1%	17.9%	15.6%	13.4%	11.2%	8.9%	6.7%	4.4%	2.2%	Free
2008.99.28	7.2%	4.8%	2.4%	Free	Free	Free	Free	Free	Free	Free
2008.99.29	5.2%	3.5%	1.7%	Free	Free	Free	Free	Free	Free	Free
2008.99.35	5.2%	3.5%	1.7%	Free	Free	Free	Free	Free	Free	Free
2008.99.40	0.7¢/kg	Free	Free	Free	Free	Free	Free	Free	Free	Free
2008.99.42	12.8%	9.6%	6.4%	3.2%	Free	Free	Free	Free	Free	Free
2008.99.45	11.2%	8.4%	5.6%	2.8%	Free	Free	Free	Free	Free	Free
2008.99.50	0.9%	Free	Free	Free	Free	Free	Free	Free	Free	Free
2008.99.60	8.9%	6.7%	4.4%	2.2%	Free	Free	Free	Free	Free	Free
2008.99.61	1.9%	Free	Free	Free	Free	Free	Free	Free	Free	Free
2008.99.63	2.2%	Free	Free	Free	Free	Free	Free	Free	Free	Free
2008.99.65	5.9%	3.9%	1.9%	Free	Free	Free	Free	Free	Free	Free
2008.99.80	7.2%	4.8%	2.4%	Free	Free	Free	Free	Free	Free	Free
2008.99.90	4.5%	3%	1.5%	Free	Free	Free	Free	Free	Free	Free
2009.11.00	7¢/liter	6.2¢/liter	5.4¢/liter	4.7¢/liter	3.9¢/liter	3.1¢/liter	2.3¢/liter	1.5¢/liter	0.7¢/liter	Free
2009.19.25	2.2¢/liter	Free	Free	Free	Free	Free	Free	Free	Free	Free
2009.19.45	3.9¢/liter	Free	Free	Free	Free	Free	Free	Free	Free	Free
2009.20.20	3.3¢/liter	2.2¢/liter	1.1¢/liter	Free	Free	Free	Free	Free	Free	Free
2009.20.40	6.3¢/liter	4.7¢/liter	3.1¢/liter	1.5¢/liter	Free	Free	Free	Free	Free	Free
2009.30.10	0.9¢/kg	Free	Free	Free	Free	Free	Free	Free	Free	Free
2009.30.20	1.2¢/liter	0.8¢/liter	0.4¢/liter	Free	Free	Free	Free	Free	Free	Free
2009.30.40	1.7¢/liter	Free	Free	Free	Free	Free	Free	Free	Free	Free
2009.30.60	6.3¢/liter	4.7¢/liter	3.1¢/liter	1.5¢/liter	Free	Free	Free	Free	Free	Free

Annex II (continued)
-33-

HTS Subheading	December 17, 2001	2002	2003	2004	2005	2006	2007	2008	2009	2010
2009.40.20	3.3¢/liter	2.5¢/liter	1.6¢/liter	0.8¢/liter	Free	Free	Free	Free	Free	Free
2009.40.40	0.5¢/liter	Free	Free	Free	Free	Free	Free	Free	Free	Free
2009.50.00	Free	Free	Free	Free	Free	Free	Free	Free	Free	Free
2009.60.00	2.2¢/liter	Free	Free	Free	Free	Free	Free	Free	Free	Free
2009.80.40	0.3¢/liter	Free	Free	Free	Free	Free	Free	Free	Free	Free
2009.80.60	0.2¢/liter	Free	Free	Free	Free	Free	Free	Free	Free	Free
2009.80.80	0.1¢/liter	Free	Free	Free	Free	Free	Free	Free	Free	Free
2009.90.20	0.1¢/liter	Free	Free	Free	Free	Free	Free	Free	Free	Free
2009.90.40	5.5¢/liter	3.7¢/liter	1.8¢/liter	Free	Free	Free	Free	Free	Free	Free
2101.12.90	6.3%	4.2%	2.1%	Free	Free	Free	Free	Free	Free	Free
2101.20.90	6.3%	4.2%	2.1%	Free	Free	Free	Free	Free	Free	Free
2101.30.00	1¢/kg	Free	Free	Free	Free	Free	Free	Free	Free	Free
2102.10.00	4.8%	3.2%	1.6%	Free	Free	Free	Free	Free	Free	Free
2102.20.20	4.8%	3.2%	1.6%	Free	Free	Free	Free	Free	Free	Free
2102.20.60	1.6%	Free	Free	Free	Free	Free	Free	Free	Free	Free
2103.10.00	1.5%	Free	Free	Free	Free	Free	Free	Free	Free	Free
2103.20.20	3%	Free	Free	Free	Free	Free	Free	Free	Free	Free
2103.20.40	5.8%	Free	Free	Free	Free	Free	Free	Free	Free	Free
2103.30.40	1.4¢/kg	Free	Free	Free	Free	Free	Free	Free	Free	Free
2103.90.40	1.6%	Free	Free	Free	Free	Free	Free	Free	Free	Free
2103.90.80	4.8%	3.2%	1.6%	Free	Free	Free	Free	Free	Free	Free
2104.20.00	1.2%	Free	Free	Free	Free	Free	Free	Free	Free	Free
2105.00.50	13.6%	10.2%	6.8%	3.4%	Free	Free	Free	Free	Free	Free
2106.10.00	4.8%	3.2%	1.6%	Free	Free	Free	Free	Free	Free	Free
2106.90.12	2.1¢/kg + 0.9%	Free	Free	Free	Free	Free	Free	Free	Free	Free
2106.90.15	4.2¢/kg + 0.9%	Free	Free	Free	Free	Free	Free	Free	Free	Free
2106.90.18	12.7¢/kg + 1.4%	8.5¢/kg + 0.9%	4.2¢/kg + 0.4%	Free	Free	Free	Free	Free	Free	Free
2106.90.28	9.8¢/kg	6.5¢/kg	3.2¢/kg	Free	Free	Free	Free	Free	Free	Free
2106.90.38	9.8¢/kg	6.5¢/kg	3.2¢/kg	Free	Free	Free	Free	Free	Free	Free
2106.90.48	6.2¢/liter	4.7¢/liter	3.1¢/liter	1.5¢/liter	Free	Free	Free	Free	Free	Free

Annex II (continued)
-34-

HTS Subheading	December 17, 2001	2002	2003	2004	2005	2006	2007	2008	2009	2010
2106.90.52	The rate applicable to the natural juice in heading 2009	Free	Free	Free	Free	Free	Free	Free	Free	Free
2106.90.54	The rate applicable to the natural juice in heading 2009	Free	Free	Free	Free	Free	Free	Free	Free	Free
2106.90.58	2.4%	Free	Free	Free	Free	Free	Free	Free	Free	Free
2106.90.82	3.2%	Free	Free	Free	Free	Free	Free	Free	Free	Free
2201.10.00	0.1¢/liter	Free	Free	Free	Free	Free	Free	Free	Free	Free
2202.90.10	13.6%	10.2%	6.8%	3.4%	Free	Free	Free	Free	Free	Free
2202.90.30	2.2¢/liter	Free	Free	Free	Free	Free	Free	Free	Free	Free
2202.90.35	5.8¢/liter	3.9¢/liter	1.9¢/liter	Free	Free	Free	Free	Free	Free	Free
2202.90.36	The rate applicable to the natural juice in heading 2009	The rate applicable to the natural juice in heading 2009	The rate applicable to the natural juice in heading 2009	Free	Free	Free	Free	Free	Free	Free
2202.90.37	The rate applicable to the natural juice in heading 2009	The rate applicable to the natural juice in heading 2009	The rate applicable to the natural juice in heading 2009	Free	Free	Free	Free	Free	Free	Free
2202.90.90	0.1¢/liter	Free	Free	Free	Free	Free	Free	Free	Free	Free
2204.10.00	19.8¢/liter	19.8¢/liter	19.8¢/liter	18.8¢/liter	16.8¢/liter	14.8¢/liter	13.3¢/liter	11.8¢/liter	10.3¢/liter	8.8¢/liter
2204.21.20	19.8¢/liter	19.8¢/liter	19.8¢/liter	18.8¢/liter	16.8¢/liter	14.8¢/liter	13.3¢/liter	11.8¢/liter	10.3¢/liter	8.8¢/liter
2204.21.30	6.3¢/liter	6.3¢/liter	6.3¢/liter	5.9¢/liter	5.3¢/liter	4.7¢/liter	4.2¢/liter	3.7¢/liter	3.2¢/liter	2.8¢/liter
2204.21.50	6.3¢/liter	6.3¢/liter	6.3¢/liter	5.9¢/liter	5.3¢/liter	4.7¢/liter	4.2¢/liter	3.7¢/liter	3.2¢/liter	2.8¢/liter
2204.21.60	5.3¢/liter	5.3¢/liter	5.3¢/liter	5¢/liter	4.5¢/liter	3.9¢/liter	3.5¢/liter	3.1¢/liter	2.7¢/liter	2.3¢/liter
2204.21.80	16.9¢/liter	16.9¢/liter	16.9¢/liter	16¢/liter	14.3¢/liter	12.6¢/liter	11.3¢/liter	10¢/liter	8.8¢/liter	7.5¢/liter
2204.29.20	8.4¢/liter	8.4¢/liter	8.4¢/liter	7.9¢/liter	7.1¢/liter	6.3¢/liter	5.6¢/liter	5¢/liter	4.3¢/liter	3.7¢/liter
2204.29.40	22.4¢/liter	22.4¢/liter	22.4¢/liter	21.2¢/liter	19¢/liter	16.8¢/liter	15¢/liter	13.3¢/liter	11.6¢/liter	9.9¢/liter

Annex II (continued)
-35-

HTS Subheading	December 17, 2001	2002	2003	2004	2005	2006	2007	2008	2009	2010
2204.29.60	14¢/liter	14¢/liter	14¢/liter	13.3¢/liter	11.9¢/liter	10.5¢/liter	9.4¢/liter	8.3¢/liter	7.2¢/liter	6.2¢/liter
2204.29.80	22.4¢/liter	22.4¢/liter	22.4¢/liter	21.2¢/liter	19¢/liter	16.8¢/liter	15¢/liter	13.3¢/liter	11.6¢/liter	9.9¢/liter
2204.30.00	4.4¢/liter + 31.4¢/pf. liter	4.4¢/liter + 31.4¢/pf. liter	4.4¢/liter + 31.4¢/pf. liter	4.1¢/liter + 29.8¢/pf. liter	3.7¢/liter + 26.6¢/pf. liter	3.3¢/liter + 23.5¢/pf. liter	2.9¢/liter + 21.1¢/pf. liter	2.6¢/liter + 18.7¢/pf. liter	2.2¢/liter + 16.3¢/pf. liter	1.9¢/liter + 13.9¢/pf. liter
2205.10.30	3.5¢/liter	3.5¢/liter	3.5¢/liter	3.3¢/liter	2.9¢/liter	2.6¢/liter	2.3¢/liter	2¢/liter	1.8¢/liter	1.5¢/liter
2205.10.60	4.2¢/liter	4.2¢/liter	4.2¢/liter	3.9¢/liter	3.5¢/liter	3.1¢/liter	2.8¢/liter	2.5¢/liter	2.1¢/liter	1.8¢/liter
2205.90.20	3.5¢/liter	3.5¢/liter	3.5¢/liter	3.3¢/liter	2.9¢/liter	2.6¢/liter	2.3¢/liter	2¢/liter	1.8¢/liter	1.5¢/liter
2205.90.40	3.8¢/liter	3.8¢/liter	3.8¢/liter	3.6¢/liter	3.2¢/liter	2.8¢/liter	2.5¢/liter	2.2¢/liter	1.9¢/liter	1.6¢/liter
2205.90.60	4.2¢/liter	4.2¢/liter	4.2¢/liter	3.9¢/liter	3.5¢/liter	3.1¢/liter	2.8¢/liter	2.5¢/liter	2.1¢/liter	1.8¢/liter
2206.00.15	0.4¢/liter	0.4¢/liter	0.4¢/liter	0.3¢/liter	0.3¢/liter	0.3¢/liter	0.2¢/liter	0.2¢/liter	0.2¢/liter	0.1¢/liter
2206.00.30	3.1¢/liter + 22.1¢/pf. liter on ethyl alcohol content	3.1¢/liter + 22.1¢/pf. liter on ethyl alcohol content	3.1¢/liter + 22.1¢/pf. liter on ethyl alcohol content	2.9¢/liter + 20.9¢/pf. liter on ethyl alcohol content	2.6¢/liter + 18.7¢/pf. liter on ethyl alcohol content	2.3¢/liter + 16.5¢/pf. liter on ethyl alcohol content	2¢/liter + 14.8¢/pf. liter on ethyl alcohol content	1.8¢/liter + 13.2¢/pf. liter on ethyl alcohol content	1.6¢/liter + 11.5¢/pf. liter on ethyl alcohol content	1.3¢/liter + 9.8¢/pf. liter on ethyl alcohol content
2206.00.45	3¢/liter	3¢/liter	3¢/liter	2.8¢/liter	2.5¢/liter	2.2¢/liter	2¢/liter	1.7¢/liter	1.5¢/liter	1.3¢/liter
2206.00.60	13.9¢/liter	13.9¢/liter	13.9¢/liter	13.2¢/liter	11.8¢/liter	10.4¢/liter	9.3¢/liter	8.3¢/liter	7.2¢/liter	6.1¢/liter
2206.00.90	4.2¢/liter	4.2¢/liter	4.2¢/liter	3.9¢/liter	3.5¢/liter	3.1¢/liter	2.8¢/liter	2.5¢/liter	2.1¢/liter	1.8¢/liter
2207.10.30	17¢/pf. liter	15.1¢/pf. liter	13.2¢/pf. liter	11.3¢/pf. liter	9.4¢/pf. liter	7.5¢/pf. liter	5.6¢/pf. liter	3.7¢/pf. liter	1.8¢/pf. liter	Free
2207.10.60	1.2%	Free	Free	Free	Free	Free	Free	Free	Free	Free
2207.20.00	0.9%	Free	Free	Free	Free	Free	Free	Free	Free	Free
2208.40.20	23.7¢/pf. liter	23.7¢/pf. liter	23.7¢/pf. liter	22.5¢/pf. liter	20.1¢/pf. liter	17.7¢/pf. liter	15.9¢/pf. liter	14.1¢/pf. liter	12.3¢/pf. liter	10.5¢/pf. liter
2208.40.60	23.7¢/pf. liter	23.7¢/pf. liter	23.7¢/pf. liter	22.5¢/pf. liter	20.1¢/pf. liter	17.7¢/pf. liter	15.9¢/pf. liter	14.1¢/pf. liter	12.3¢/pf. liter	10.5¢/pf. liter
2208.90.80	21.1¢/pf. liter	21.1¢/pf. liter	21.1¢/pf. liter	20¢/pf. liter	17.9¢/pf. liter	15.8¢/pf. liter	14.2¢/pf. liter	12.6¢/pf. liter	10.9¢/pf. liter	9.3¢/pf. liter
2209.00.00	0.2¢/pf. liter	Free	Free	Free	Free	Free	Free	Free	Free	Free
2302.50.00	0.7%	Free	Free	Free	Free	Free	Free	Free	Free	Free
2303.10.00	0.7%	Free	Free	Free	Free	Free	Free	Free	Free	Free
2304.00.00	0.2¢/liter	Free	Free	Free	Free	Free	Free	Free	Free	Free
2305.00.00	0.1¢/kg	Free	Free	Free	Free	Free	Free	Free	Free	Free
2306.10.00	0.4¢/kg	0.2¢/kg	0.1¢/kg	Free	Free	Free	Free	Free	Free	Free
2306.20.00	Free	Free	Free	Free	Free	Free	Free	Free	Free	Free
2306.30.00	0.2¢/kg	Free	Free	Free	Free	Free	Free	Free	Free	Free
2306.40.00	Free	Free	Free	Free	Free	Free	Free	Free	Free	Free

Annex II (continued)
-36-

HTS Subheading	December 17, 2001	2002	2003	2004	2005	2006	2007	2008	2009	2010
2306.50.00	0.2¢/kg	Free	Free	Free	Free	Free	Free	Free	Free	Free
2306.60.00	0.1¢/kg	Free	Free	Free	Free	Free	Free	Free	Free	Free
2306.70.00	0.1¢/kg	Free	Free	Free	Free	Free	Free	Free	Free	Free
2306.90.00	0.1¢/kg	Free	Free	Free	Free	Free	Free	Free	Free	Free
2308.10.00	0.7%	Free	Free	Free	Free	Free	Free	Free	Free	Free
2308.90.50	0.9%	Free	Free	Free	Free	Free	Free	Free	Free	Free
2308.90.80	0.7%	Free	Free	Free	Free	Free	Free	Free	Free	Free
2309.90.60	0.9%	Free	Free	Free	Free	Free	Free	Free	Free	Free
2309.90.70	0.7%	Free	Free	Free	Free	Free	Free	Free	Free	Free
2309.90.95	0.7%	Free	Free	Free	Free	Free	Free	Free	Free	Free
2511.10.50	62.5¢/t	Free	Free	Free	Free	Free	Free	Free	Free	Free
2515.12.20	1.5%	Free	Free	Free	Free	Free	Free	Free	Free	Free
2515.20.00	1.5%	Free	Free	Free	Free	Free	Free	Free	Free	Free
2516.12.00	1.4%	Free	Free	Free	Free	Free	Free	Free	Free	Free
2516.22.00	1.5%	Free	Free	Free	Free	Free	Free	Free	Free	Free
2516.90.00	1.5%	Free	Free	Free	Free	Free	Free	Free	Free	Free
2518.20.00	1.5%	Free	Free	Free	Free	Free	Free	Free	Free	Free
2530.40.00	1.4%	Free	Free	Free	Free	Free	Free	Free	Free	Free
2603.00.00	0.8¢/kg on lead content	Free	Free	Free	Free	Free	Free	Free	Free	Free
2607.00.00	0.5¢/kg on lead content	Free	Free	Free	Free	Free	Free	Free	Free	Free
2611.00.60	28.1¢/kg on tungsten content	18.7¢/kg on tungsten content	9.3¢/kg on tungsten content	Free	Free	Free	Free	Free	Free	Free
2613.10.00	6.4¢/kg on molybdenum content + 0.9%	Free	Free	Free	Free	Free	Free	Free	Free	Free
2613.90.00	13.3¢/kg on molybdenum content	8.9¢/kg on molybdenum content	4.4¢/kg on molybdenum content	Free	Free	Free	Free	Free	Free	Free
2616.10.00	0.4¢/kg on lead content	Free	Free	Free	Free	Free	Free	Free	Free	Free

Annex II (continued)
-37-

HTS Subheading	December 17, 2001	2002	2003	2004	2005	2006	2007	2008	2009	2010
2616.90.00	0.8¢/kg on lead content	Free	Free	Free	Free	Free	Free	Free	Free	Free
2620.19.60	0.3¢/kg on copper content + 0.3¢/kg on lead content	Free	Free	Free	Free	Free	Free	Free	Free	Free
2620.90.20	13.2¢/kg on tungsten content + 2.8%	8.8¢/kg on tungsten content + 1.9%	4.4¢/kg on tungsten content + 0.9%	Free	Free	Free	Free	Free	Free	Free
2707.60.05	2.3¢/kg + 10%	1.7¢/kg + 7.5%	1.1¢/kg + 5%	0.5¢/kg + 2.5%	Free	Free	Free	Free	Free	Free
2707.60.10	0.4¢/kg + 1.5%	Free	Free	Free	Free	Free	Free	Free	Free	Free
2707.99.40	0.4¢/kg + 1.5%	Free	Free	Free	Free	Free	Free	Free	Free	Free
2709.00.10	2.6¢/bbl	Free	Free	Free	Free	Free	Free	Free	Free	Free
2709.00.20	5.2¢/bbl	Free	Free	Free	Free	Free	Free	Free	Free	Free
2710.00.05	2.6¢/bbl	Free	Free	Free	Free	Free	Free	Free	Free	Free
2710.00.10	5.2¢/bbl	Free	Free	Free	Free	Free	Free	Free	Free	Free
2710.00.15	26.2¢/bbl	Free	Free	Free	Free	Free	Free	Free	Free	Free
2710.00.18	26.2¢/bbl	Free	Free	Free	Free	Free	Free	Free	Free	Free
2710.00.20	5.2¢/bbl	Free	Free	Free	Free	Free	Free	Free	Free	Free
2710.00.25	5.2¢/bbl	Free	Free	Free	Free	Free	Free	Free	Free	Free
2710.00.30	42¢/bbl	Free	Free	Free	Free	Free	Free	Free	Free	Free
2710.00.35	4.3%	2.9%	1.4%	Free	Free	Free	Free	Free	Free	Free
2710.00.40	0.9¢/kg + 4.2%	0.6¢/kg + 2.8%	0.3¢/kg + 1.4%	Free	Free	Free	Free	Free	Free	Free
2710.00.45	5.2¢/bbl	Free	Free	Free	Free	Free	Free	Free	Free	Free
2710.00.60	5.2%	3.5%	1.7%	Free	Free	Free	Free	Free	Free	Free
2801.30.10	1.8%	Free	Free	Free	Free	Free	Free	Free	Free	Free
2801.30.20	2.7%	Free	Free	Free	Free	Free	Free	Free	Free	Free
2804.10.00	1.8%	Free	Free	Free	Free	Free	Free	Free	Free	Free
2804.21.00	1.8%	Free	Free	Free	Free	Free	Free	Free	Free	Free
2804.29.00	1.8%	Free	Free	Free	Free	Free	Free	Free	Free	Free
2804.30.00	1.8%	Free	Free	Free	Free	Free	Free	Free	Free	Free
2804.40.00	1.8%	Free	Free	Free	Free	Free	Free	Free	Free	Free
2804.69.10	3.9%	2.6%	1.3%	Free	Free	Free	Free	Free	Free	Free

Annex II (continued)
-38-

HTS Subheading	December 17, 2001	2002	2003	2004	2005	2006	2007	2008	2009	2010
2804.69.50	4.1%	2.7%	1.3%	Free	Free	Free	Free	Free	Free	Free
2805.11.00	3.9%	2.6%	1.3%	Free	Free	Free	Free	Free	Free	Free
2805.19.00	4.1%	2.7%	1.3%	Free	Free	Free	Free	Free	Free	Free
2805.21.00	1.5%	Free	Free	Free	Free	Free	Free	Free	Free	Free
2805.22.10	1.8%	Free	Free	Free	Free	Free	Free	Free	Free	Free
2805.30.00	2.5%	Free	Free	Free	Free	Free	Free	Free	Free	Free
2805.40.00	0.8%	Free	Free	Free	Free	Free	Free	Free	Free	Free
2806.20.00	2.1%	Free	Free	Free	Free	Free	Free	Free	Free	Free
2810.00.00	0.7%	Free	Free	Free	Free	Free	Free	Free	Free	Free
2811.19.10	1.1%	Free	Free	Free	Free	Free	Free	Free	Free	Free
2811.19.60	2.1%	Free	Free	Free	Free	Free	Free	Free	Free	Free
2811.21.00	1.8%	Free	Free	Free	Free	Free	Free	Free	Free	Free
2811.22.10	1.8%	Free	Free	Free	Free	Free	Free	Free	Free	Free
2811.23.00	2.1%	Free	Free	Free	Free	Free	Free	Free	Free	Free
2811.29.50	1.8%	Free	Free	Free	Free	Free	Free	Free	Free	Free
2812.10.50	1.8%	Free	Free	Free	Free	Free	Free	Free	Free	Free
2812.90.00	1.8%	Free	Free	Free	Free	Free	Free	Free	Free	Free
2813.10.00	1.8%	Free	Free	Free	Free	Free	Free	Free	Free	Free
2813.90.50	1.8%	Free	Free	Free	Free	Free	Free	Free	Free	Free
2815.30.00	1.8%	Free	Free	Free	Free	Free	Free	Free	Free	Free
2816.10.00	1.5%	Free	Free	Free	Free	Free	Free	Free	Free	Free
2816.20.00	2.1%	Free	Free	Free	Free	Free	Free	Free	Free	Free
2816.30.00	1%	Free	Free	Free	Free	Free	Free	Free	Free	Free
2818.10.20	0.6%	Free	Free	Free	Free	Free	Free	Free	Free	Free
2819.10.00	1.8%	Free	Free	Free	Free	Free	Free	Free	Free	Free
2819.90.00	1.8%	Free	Free	Free	Free	Free	Free	Free	Free	Free
2820.10.00	2.3%	Free	Free	Free	Free	Free	Free	Free	Free	Free
2820.90.00	2.3%	Free	Free	Free	Free	Free	Free	Free	Free	Free
2821.10.00	1.8%	Free	Free	Free	Free	Free	Free	Free	Free	Free
2821.20.00	4.1%	2.7%	1.3%	Free	Free	Free	Free	Free	Free	Free
2822.00.00	Free	Free	Free	Free	Free	Free	Free	Free	Free	Free

Annex II (continued)
-39-

HTS Subheading	December 17, 2001	2002	2003	2004	2005	2006	2007	2008	2009	2010
2823.00.00	4.1%	2.7%	1.3%	Free	Free	Free	Free	Free	Free	Free
2824.10.00	1.5%	Free	Free	Free	Free	Free	Free	Free	Free	Free
2824.20.00	1.7%	Free	Free	Free	Free	Free	Free	Free	Free	Free
2824.90.10	6.9%	4.6%	2.3%	Free	Free	Free	Free	Free	Free	Free
2824.90.50	2.4%	Free	Free	Free	Free	Free	Free	Free	Free	Free
2825.10.00	1.8%	Free	Free	Free	Free	Free	Free	Free	Free	Free
2825.20.00	1.8%	Free	Free	Free	Free	Free	Free	Free	Free	Free
2825.30.00	7.2%	4.8%	2.4%	Free	Free	Free	Free	Free	Free	Free
2825.50.10	2.1%	Free	Free	Free	Free	Free	Free	Free	Free	Free
2825.50.20	2.5%	Free	Free	Free	Free	Free	Free	Free	Free	Free
2825.50.30	1.9%	Free	Free	Free	Free	Free	Free	Free	Free	Free
2825.60.00	1.8%	Free	Free	Free	Free	Free	Free	Free	Free	Free
2825.70.00	1.6%	Free	Free	Free	Free	Free	Free	Free	Free	Free
2825.90.10	1.8%	Free	Free	Free	Free	Free	Free	Free	Free	Free
2825.90.15	1.8%	Free	Free	Free	Free	Free	Free	Free	Free	Free
2825.90.20	2.1%	Free	Free	Free	Free	Free	Free	Free	Free	Free
2825.90.30	4.1%	2.7%	1.3%	Free	Free	Free	Free	Free	Free	Free
2825.90.90	1.8%	Free	Free	Free	Free	Free	Free	Free	Free	Free
2826.11.10	1.5%	Free	Free	Free	Free	Free	Free	Free	Free	Free
2826.11.50	1.8%	Free	Free	Free	Free	Free	Free	Free	Free	Free
2826.19.00	1.9%	Free	Free	Free	Free	Free	Free	Free	Free	Free
2826.20.00	2%	Free	Free	Free	Free	Free	Free	Free	Free	Free
2826.90.00	1.5%	Free	Free	Free	Free	Free	Free	Free	Free	Free
2827.10.00	1.4%	Free	Free	Free	Free	Free	Free	Free	Free	Free
2827.31.00	0.7%	Free	Free	Free	Free	Free	Free	Free	Free	Free
2827.33.00	1.8%	Free	Free	Free	Free	Free	Free	Free	Free	Free
2827.34.00	2.1%	Free	Free	Free	Free	Free	Free	Free	Free	Free
2827.35.00	1.8%	Free	Free	Free	Free	Free	Free	Free	Free	Free
2827.36.00	0.8%	Free	Free	Free	Free	Free	Free	Free	Free	Free
2827.38.00	2.1%	Free	Free	Free	Free	Free	Free	Free	Free	Free
2827.39.10	7.2%	4.8%	2.4%	Free	Free	Free	Free	Free	Free	Free

Annex II (continued)
-40-

HTS Subheading	December 17, 2001	2002	2003	2004	2005	2006	2007	2008	2009	2010
2827.39.20	3.8%	2.5%	1.2%	Free	Free	Free	Free	Free	Free	Free
2827.39.25	2.1%	Free	Free	Free	Free	Free	Free	Free	Free	Free
2827.39.30	2.4%	Free	Free	Free	Free	Free	Free	Free	Free	Free
2827.39.40	4.1%	2.7%	1.3%	Free	Free	Free	Free	Free	Free	Free
2827.39.50	1.8%	Free	Free	Free	Free	Free	Free	Free	Free	Free
2827.41.00	1.9%	Free	Free	Free	Free	Free	Free	Free	Free	Free
2827.49.10	7.2%	4.8%	2.4%	Free	Free	Free	Free	Free	Free	Free
2827.49.50	4.1%	2.7%	1.3%	Free	Free	Free	Free	Free	Free	Free
2827.59.50	1.8%	Free	Free	Free	Free	Free	Free	Free	Free	Free
2827.60.20	1.4%	Free	Free	Free	Free	Free	Free	Free	Free	Free
2827.60.50	2.1%	Free	Free	Free	Free	Free	Free	Free	Free	Free
2828.10.00	1.2%	Free	Free	Free	Free	Free	Free	Free	Free	Free
2828.90.00	1.8%	Free	Free	Free	Free	Free	Free	Free	Free	Free
2829.19.00	1.6%	Free	Free	Free	Free	Free	Free	Free	Free	Free
2829.90.40	1.5%	Free	Free	Free	Free	Free	Free	Free	Free	Free
2829.90.60	1.8%	Free	Free	Free	Free	Free	Free	Free	Free	Free
2830.10.00	1.8%	Free	Free	Free	Free	Free	Free	Free	Free	Free
2830.20.20	1.4%	Free	Free	Free	Free	Free	Free	Free	Free	Free
2830.30.00	1.5%	Free	Free	Free	Free	Free	Free	Free	Free	Free
2830.90.00	1.5%	Free	Free	Free	Free	Free	Free	Free	Free	Free
2831.10.50	8.2%	6.1%	4.1%	2%	Free	Free	Free	Free	Free	Free
2831.90.00	8.2%	6.1%	4.1%	2%	Free	Free	Free	Free	Free	Free
2832.10.00	0.7%	Free	Free	Free	Free	Free	Free	Free	Free	Free
2832.20.00	1.5%	Free	Free	Free	Free	Free	Free	Free	Free	Free
2832.30.10	0.7%	Free	Free	Free	Free	Free	Free	Free	Free	Free
2832.30.50	1.5%	Free	Free	Free	Free	Free	Free	Free	Free	Free
2833.11.50	0.2%	Free	Free	Free	Free	Free	Free	Free	Free	Free
2833.21.00	1.8%	Free	Free	Free	Free	Free	Free	Free	Free	Free
2833.23.00	1.8%	Free	Free	Free	Free	Free	Free	Free	Free	Free
2833.24.00	1.6%	Free	Free	Free	Free	Free	Free	Free	Free	Free
2833.25.00	0.7%	Free	Free	Free	Free	Free	Free	Free	Free	Free

Annex II (continued)
-41-

HTS Subheading	December 17, 2001	2002	2003	2004	2005	2006	2007	2008	2009	2010
2833.26.00	0.8%	Free	Free	Free	Free	Free	Free	Free	Free	Free
2833.27.00	0.3%	Free	Free	Free	Free	Free	Free	Free	Free	Free
2833.29.10	0.7%	Free	Free	Free	Free	Free	Free	Free	Free	Free
2833.29.30	7.2%	4.8%	2.4%	Free	Free	Free	Free	Free	Free	Free
2833.29.50	1.8%	Free	Free	Free	Free	Free	Free	Free	Free	Free
2833.30.00	0.8%	Free	Free	Free	Free	Free	Free	Free	Free	Free
2833.40.20	1.8%	Free	Free	Free	Free	Free	Free	Free	Free	Free
2833.40.60	1.5%	Free	Free	Free	Free	Free	Free	Free	Free	Free
2834.10.10	4.1%	2.7%	1.3%	Free	Free	Free	Free	Free	Free	Free
2834.10.50	1.5%	Free	Free	Free	Free	Free	Free	Free	Free	Free
2834.22.00	4.1%	2.7%	1.3%	Free	Free	Free	Free	Free	Free	Free
2834.29.20	2.1%	Free	Free	Free	Free	Free	Free	Free	Free	Free
2834.29.50	1.7%	Free	Free	Free	Free	Free	Free	Free	Free	Free
2835.10.00	1.5%	Free	Free	Free	Free	Free	Free	Free	Free	Free
2835.22.00	0.7%	Free	Free	Free	Free	Free	Free	Free	Free	Free
2835.23.00	1.1%	Free	Free	Free	Free	Free	Free	Free	Free	Free
2835.24.00	1.5%	Free	Free	Free	Free	Free	Free	Free	Free	Free
2835.29.20	0.7%	Free	Free	Free	Free	Free	Free	Free	Free	Free
2835.29.50	2%	Free	Free	Free	Free	Free	Free	Free	Free	Free
2835.31.00	0.7%	Free	Free	Free	Free	Free	Free	Free	Free	Free
2835.39.10	1.5%	Free	Free	Free	Free	Free	Free	Free	Free	Free
2835.39.50	1.8%	Free	Free	Free	Free	Free	Free	Free	Free	Free
2836.10.00	0.8%	Free	Free	Free	Free	Free	Free	Free	Free	Free
2836.20.00	0.6%	Free	Free	Free	Free	Free	Free	Free	Free	Free
2836.40.10	0.9%	Free	Free	Free	Free	Free	Free	Free	Free	Free
2836.40.20	0.6%	Free	Free	Free	Free	Free	Free	Free	Free	Free
2836.60.00	1.1%	Free	Free	Free	Free	Free	Free	Free	Free	Free
2836.70.00	0.2%	Free	Free	Free	Free	Free	Free	Free	Free	Free
2836.91.00	1.8%	Free	Free	Free	Free	Free	Free	Free	Free	Free
2836.92.00	2.1%	Free	Free	Free	Free	Free	Free	Free	Free	Free
2836.99.10	2.1%	Free	Free	Free	Free	Free	Free	Free	Free	Free

Annex II (continued)
-42-

HTS Subheading	December 17, 2001	2002	2003	2004	2005	2006	2007	2008	2009	2010
2836.99.20	4.1%	2.7%	1.3%	Free	Free	Free	Free	Free	Free	Free
2836.99.50	1.8%	Free	Free	Free	Free	Free	Free	Free	Free	Free
2837.20.10	0.5%	Free	Free	Free	Free	Free	Free	Free	Free	Free
2837.20.50	0.8%	Free	Free	Free	Free	Free	Free	Free	Free	Free
2838.00.00	1.5%	Free	Free	Free	Free	Free	Free	Free	Free	Free
2839.11.00	0.5%	Free	Free	Free	Free	Free	Free	Free	Free	Free
2839.19.00	0.5%	Free	Free	Free	Free	Free	Free	Free	Free	Free
2839.20.00	1.5%	Free	Free	Free	Free	Free	Free	Free	Free	Free
2839.90.00	1.5%	Free	Free	Free	Free	Free	Free	Free	Free	Free
2840.11.00	0.1%	Free	Free	Free	Free	Free	Free	Free	Free	Free
2840.19.00	Free	Free	Free	Free	Free	Free	Free	Free	Free	Free
2840.20.00	1.8%	Free	Free	Free	Free	Free	Free	Free	Free	Free
2840.30.00	1.8%	Free	Free	Free	Free	Free	Free	Free	Free	Free
2841.10.00	1.5%	Free	Free	Free	Free	Free	Free	Free	Free	Free
2841.20.00	1.8%	Free	Free	Free	Free	Free	Free	Free	Free	Free
2841.30.00	1.2%	Free	Free	Free	Free	Free	Free	Free	Free	Free
2841.40.00	0.7%	Free	Free	Free	Free	Free	Free	Free	Free	Free
2841.50.00	1.5%	Free	Free	Free	Free	Free	Free	Free	Free	Free
2841.61.00	2.5%	Free	Free	Free	Free	Free	Free	Free	Free	Free
2841.69.00	2.5%	Free	Free	Free	Free	Free	Free	Free	Free	Free
2841.70.10	2.1%	Free	Free	Free	Free	Free	Free	Free	Free	Free
2841.70.50	1.8%	Free	Free	Free	Free	Free	Free	Free	Free	Free
2841.80.00	4.1%	2.7%	1.3%	Free	Free	Free	Free	Free	Free	Free
2841.90.10	5.8%	3.9%	1.9%	Free	Free	Free	Free	Free	Free	Free
2841.90.20	1.5%	Free	Free	Free	Free	Free	Free	Free	Free	Free
2841.90.30	1.5%	Free	Free	Free	Free	Free	Free	Free	Free	Free
2841.90.50	1.8%	Free	Free	Free	Free	Free	Free	Free	Free	Free
2842.10.00	1.8%	Free	Free	Free	Free	Free	Free	Free	Free	Free
2842.90.00	1.6%	Free	Free	Free	Free	Free	Free	Free	Free	Free
2843.10.00	4.1%	2.7%	1.3%	Free	Free	Free	Free	Free	Free	Free
2843.21.00	1.8%	Free	Free	Free	Free	Free	Free	Free	Free	Free

Annex II (continued)
-43-

HTS Subheading	December 17, 2001	2002	2003	2004	2005	2006	2007	2008	2009	2010
2843.29.00	1.8%	Free	Free	Free	Free	Free	Free	Free	Free	Free
2843.30.00	2.5%	Free	Free	Free	Free	Free	Free	Free	Free	Free
2843.90.00	1.8%	Free	Free	Free	Free	Free	Free	Free	Free	Free
2844.10.10	2.5%	Free	Free	Free	Free	Free	Free	Free	Free	Free
2844.10.50	2.5%	Free	Free	Free	Free	Free	Free	Free	Free	Free
2844.30.10	4.1%	2.7%	1.3%	Free	Free	Free	Free	Free	Free	Free
2844.30.50	2.5%	Free	Free	Free	Free	Free	Free	Free	Free	Free
2846.10.00	4.1%	2.7%	1.3%	Free	Free	Free	Free	Free	Free	Free
2846.90.80	1.8%	Free	Free	Free	Free	Free	Free	Free	Free	Free
2847.00.00	1.8%	Free	Free	Free	Free	Free	Free	Free	Free	Free
2848.00.10	1.3%	Free	Free	Free	Free	Free	Free	Free	Free	Free
2849.10.00	0.9%	Free	Free	Free	Free	Free	Free	Free	Free	Free
2849.20.20	0.2%	Free	Free	Free	Free	Free	Free	Free	Free	Free
2849.90.10	1.8%	Free	Free	Free	Free	Free	Free	Free	Free	Free
2849.90.20	2.1%	Free	Free	Free	Free	Free	Free	Free	Free	Free
2849.90.30	5.6%	3.7%	1.8%	Free	Free	Free	Free	Free	Free	Free
2849.90.50	1.8%	Free	Free	Free	Free	Free	Free	Free	Free	Free
2850.00.07	2.4%	Free	Free	Free	Free	Free	Free	Free	Free	Free
2850.00.10	4.1%	2.7%	1.3%	Free	Free	Free	Free	Free	Free	Free
2850.00.20	7.2%	4.8%	2.4%	Free	Free	Free	Free	Free	Free	Free
2850.00.50	1.8%	Free	Free	Free	Free	Free	Free	Free	Free	Free
2851.00.00	1.4%	Free	Free	Free	Free	Free	Free	Free	Free	Free
2903.11.00	9%	6.7%	4.5%	2.2%	Free	Free	Free	Free	Free	Free
2903.12.00	1.8%	Free	Free	Free	Free	Free	Free	Free	Free	Free
2903.13.00	7.2%	4.8%	2.4%	Free	Free	Free	Free	Free	Free	Free
2903.14.00	1.1%	Free	Free	Free	Free	Free	Free	Free	Free	Free
2903.15.00	4.1%	2.7%	1.3%	Free	Free	Free	Free	Free	Free	Free
2903.16.00	3.8%	2.5%	1.2%	Free	Free	Free	Free	Free	Free	Free
2903.19.10	1.8%	Free	Free	Free	Free	Free	Free	Free	Free	Free
2903.19.60	8.4%	6.3%	4.2%	2.1%	Free	Free	Free	Free	Free	Free
2903.21.00	6%	4%	2%	Free	Free	Free	Free	Free	Free	Free

Annex II (continued)
-44-

HTS Subheading	December 17, 2001	2002	2003	2004	2005	2006	2007	2008	2009	2010
2903.22.00	2.1%	Free	Free	Free	Free	Free	Free	Free	Free	Free
2903.23.00	1.7%	Free	Free	Free	Free	Free	Free	Free	Free	Free
2903.29.00	8.4%	6.3%	4.2%	2.1%	Free	Free	Free	Free	Free	Free
2903.30.05	4%	2.7%	1.3%	Free	Free	Free	Free	Free	Free	Free
2903.30.20	1.8%	Free	Free	Free	Free	Free	Free	Free	Free	Free
2903.41.00	1.8%	Free	Free	Free	Free	Free	Free	Free	Free	Free
2903.42.00	1.8%	Free	Free	Free	Free	Free	Free	Free	Free	Free
2903.43.00	1.8%	Free	Free	Free	Free	Free	Free	Free	Free	Free
2903.44.00	1.8%	Free	Free	Free	Free	Free	Free	Free	Free	Free
2903.45.00	1.8%	Free	Free	Free	Free	Free	Free	Free	Free	Free
2903.46.00	1.8%	Free	Free	Free	Free	Free	Free	Free	Free	Free
2903.47.00	1.8%	Free	Free	Free	Free	Free	Free	Free	Free	Free
2903.49.90	1.8%	Free	Free	Free	Free	Free	Free	Free	Free	Free
2903.51.00	6.2%	4.1%	2%	Free	Free	Free	Free	Free	Free	Free
2903.59.10	6.2%	4.1%	2%	Free	Free	Free	Free	Free	Free	Free
2903.59.15	6.5%	4.3%	2.1%	Free	Free	Free	Free	Free	Free	Free
2903.59.20	1.1¢/kg + 7.5%	0.7¢/kg + 5%	0.3¢/kg + 2.5%	Free	Free	Free	Free	Free	Free	Free
2903.59.30	8.4%	6.3%	4.2%	2.1%	Free	Free	Free	Free	Free	Free
2903.59.40	1.8%	Free	Free	Free	Free	Free	Free	Free	Free	Free
2903.59.70	1.8%	Free	Free	Free	Free	Free	Free	Free	Free	Free
2903.61.10	9%	6.7%	4.5%	2.2%	Free	Free	Free	Free	Free	Free
2903.61.20	7%	4.7%	2.3%	Free	Free	Free	Free	Free	Free	Free
2903.61.30	4.1%	2.7%	1.3%	Free	Free	Free	Free	Free	Free	Free
2903.62.00	4.1%	2.7%	1.3%	Free	Free	Free	Free	Free	Free	Free
2903.69.05	4.1%	2.7%	1.3%	Free	Free	Free	Free	Free	Free	Free
2903.69.10	4.1%	2.7%	1.3%	Free	Free	Free	Free	Free	Free	Free
2903.69.20	4.1%	2.7%	1.3%	Free	Free	Free	Free	Free	Free	Free
2903.69.27	4.1%	2.7%	1.3%	Free	Free	Free	Free	Free	Free	Free
2903.69.30	6.2%	4.1%	2%	Free	Free	Free	Free	Free	Free	Free
2903.69.70	4.1%	2.7%	1.3%	Free	Free	Free	Free	Free	Free	Free
2904.10.04	6.5%	4.3%	2.1%	Free	Free	Free	Free	Free	Free	Free

Annex II (continued)
-45-

HTS Subheading	December 17, 2001	2002	2003	2004	2005	2006	2007	2008	2009	2010
2904.10.08	1.2¢/kg + 7.7%	0.9¢/kg + 5.8%	0.6¢/kg + 3.8%	0.3¢/kg + 1.9%	Free	Free	Free	Free	Free	Free
2904.10.10	4.1%	2.7%	1.3%	Free	Free	Free	Free	Free	Free	Free
2904.10.15	1.1¢/kg + 6.2%	0.7¢/kg + 4.1%	0.3¢/kg + 2%	Free	Free	Free	Free	Free	Free	Free
2904.10.32	6.5%	4.3%	2.1%	Free	Free	Free	Free	Free	Free	Free
2904.10.37	1.2¢/kg + 7.7%	0.9¢/kg + 5.8%	0.6¢/kg + 3.8%	0.3¢/kg + 1.9%	Free	Free	Free	Free	Free	Free
2904.10.50	2.1%	Free	Free	Free	Free	Free	Free	Free	Free	Free
2904.20.10	4.1%	2.7%	1.3%	Free	Free	Free	Free	Free	Free	Free
2904.20.15	4.1%	2.7%	1.3%	Free	Free	Free	Free	Free	Free	Free
2904.20.30	4.1%	2.7%	1.3%	Free	Free	Free	Free	Free	Free	Free
2904.20.35	0.9¢/kg + 6.6%	0.7¢/kg + 4.9%	0.4¢/kg + 3.3%	0.2¢/kg + 1.6%	Free	Free	Free	Free	Free	Free
2904.20.40	6.5%	4.3%	2.1%	Free	Free	Free	Free	Free	Free	Free
2904.20.45	1.1¢/kg + 7.2%	0.7¢/kg + 4.8%	0.3¢/kg + 2.4%	Free	Free	Free	Free	Free	Free	Free
2904.20.50	4.1%	2.7%	1.3%	Free	Free	Free	Free	Free	Free	Free
2904.90.04	4.1%	2.7%	1.3%	Free	Free	Free	Free	Free	Free	Free
2904.90.08	4.1%	2.7%	1.3%	Free	Free	Free	Free	Free	Free	Free
2904.90.15	1.1¢/kg + 7.2%	0.7¢/kg + 4.8%	0.3¢/kg + 2.4%	Free	Free	Free	Free	Free	Free	Free
2904.90.20	5.7%	3.8%	1.9%	Free	Free	Free	Free	Free	Free	Free
2904.90.30	4.1%	2.7%	1.3%	Free	Free	Free	Free	Free	Free	Free
2904.90.35	6.9%	4.6%	2.3%	Free	Free	Free	Free	Free	Free	Free
2904.90.40	6.5%	4.3%	2.1%	Free	Free	Free	Free	Free	Free	Free
2904.90.47	1.2¢/kg + 7.7%	0.9¢/kg + 5.8%	0.6¢/kg + 3.8%	0.3¢/kg + 1.9%	Free	Free	Free	Free	Free	Free
2904.90.50	1.8%	Free	Free	Free	Free	Free	Free	Free	Free	Free
2905.11.20	8.4%	6.3%	4.2%	2.1%	Free	Free	Free	Free	Free	Free
2905.12.00	6.6%	4.4%	2.2%	Free	Free	Free	Free	Free	Free	Free
2905.13.00	4.1%	2.7%	1.3%	Free	Free	Free	Free	Free	Free	Free
2905.14.50	4.1%	2.7%	1.3%	Free	Free	Free	Free	Free	Free	Free
2905.15.00	4.1%	2.7%	1.3%	Free	Free	Free	Free	Free	Free	Free
2905.16.00	1.8%	Free	Free	Free	Free	Free	Free	Free	Free	Free
2905.17.00	2.5%	Free	Free	Free	Free	Free	Free	Free	Free	Free
2905.19.00	1.8%	Free	Free	Free	Free	Free	Free	Free	Free	Free
2905.22.10	1.5%	Free	Free	Free	Free	Free	Free	Free	Free	Free

Annex II (continued)
-46-

HTS Subheading	December 17, 2001	2002	2003	2004	2005	2006	2007	2008	2009	2010
2905.22.20	1.8%	Free	Free	Free	Free	Free	Free	Free	Free	Free
2905.22.50	2.4%	Free	Free	Free	Free	Free	Free	Free	Free	Free
2905.29.10	4.1%	2.7%	1.3%	Free	Free	Free	Free	Free	Free	Free
2905.29.90	1.8%	Free	Free	Free	Free	Free	Free	Free	Free	Free
2905.31.00	6%	4%	2%	Free	Free	Free	Free	Free	Free	Free
2905.32.00	5.9%	3.9%	1.9%	Free	Free	Free	Free	Free	Free	Free
2905.39.10	5.9%	3.9%	1.9%	Free	Free	Free	Free	Free	Free	Free
2905.39.20	4.1%	2.7%	1.3%	Free	Free	Free	Free	Free	Free	Free
2905.39.90	6.1%	4.1%	2%	Free	Free	Free	Free	Free	Free	Free
2905.41.00	1.8%	Free	Free	Free	Free	Free	Free	Free	Free	Free
2905.42.00	1.8%	Free	Free	Free	Free	Free	Free	Free	Free	Free
2905.43.00	2.3%	Free	Free	Free	Free	Free	Free	Free	Free	Free
2905.44.00	2.4%	Free	Free	Free	Free	Free	Free	Free	Free	Free
2905.49.10	1.8%	Free	Free	Free	Free	Free	Free	Free	Free	Free
2905.49.20	6.1%	4.1%	2%	Free	Free	Free	Free	Free	Free	Free
2905.49.40	4.1%	2.7%	1.3%	Free	Free	Free	Free	Free	Free	Free
2905.49.50	6.1%	4.1%	2%	Free	Free	Free	Free	Free	Free	Free
2905.50.10	4.1%	2.7%	1.3%	Free	Free	Free	Free	Free	Free	Free
2905.50.60	6.1%	4.1%	2%	Free	Free	Free	Free	Free	Free	Free
2906.11.00	1%	Free	Free	Free	Free	Free	Free	Free	Free	Free
2906.12.00	1.2¢/kg + 8%	0.9¢/kg + 6%	0.6¢/kg + 4%	0.3¢/kg + 2%	Free	Free	Free	Free	Free	Free
2906.13.50	1.8%	Free	Free	Free	Free	Free	Free	Free	Free	Free
2906.14.00	4.1%	2.7%	1.3%	Free	Free	Free	Free	Free	Free	Free
2906.19.50	4.1%	2.7%	1.3%	Free	Free	Free	Free	Free	Free	Free
2906.21.00	4.1%	2.7%	1.3%	Free	Free	Free	Free	Free	Free	Free
2906.29.10	7.3%	4.9%	2.4%	Free	Free	Free	Free	Free	Free	Free
2906.29.20	6%	4%	2%	Free	Free	Free	Free	Free	Free	Free
2906.29.60	4.1%	2.7%	1.3%	Free	Free	Free	Free	Free	Free	Free
2907.11.00	4.1%	2.7%	1.3%	Free	Free	Free	Free	Free	Free	Free
2907.12.00	2.1%	Free	Free	Free	Free	Free	Free	Free	Free	Free
2907.13.00	5.7%	3.8%	1.9%	Free	Free	Free	Free	Free	Free	Free

Annex II (continued)
-47-

HTS Subheading	December 17, 2001	2002	2003	2004	2005	2006	2007	2008	2009	2010
2907.15.10	9%	6.7%	4.5%	2.2%	Free	Free	Free	Free	Free	Free
2907.15.60	9%	6.7%	4.5%	2.2%	Free	Free	Free	Free	Free	Free
2907.19.10	4.1%	2.7%	1.3%	Free	Free	Free	Free	Free	Free	Free
2907.19.20	5.7%	3.8%	1.9%	Free	Free	Free	Free	Free	Free	Free
2907.19.40	2.1%	Free	Free	Free	Free	Free	Free	Free	Free	Free
2907.19.80	4.1%	2.7%	1.3%	Free	Free	Free	Free	Free	Free	Free
2907.21.00	4.1%	2.7%	1.3%	Free	Free	Free	Free	Free	Free	Free
2907.22.10	4.1%	2.7%	1.3%	Free	Free	Free	Free	Free	Free	Free
2907.22.50	4.1%	2.7%	1.3%	Free	Free	Free	Free	Free	Free	Free
2907.23.00	1.2¢/kg + 7%	0.9¢/kg + 5.2%	0.6¢/kg + 3.5%	0.3¢/kg + 1.7%	Free	Free	Free	Free	Free	Free
2907.29.10	0.6%	Free	Free	Free	Free	Free	Free	Free	Free	Free
2907.29.25	4.1%	2.7%	1.3%	Free	Free	Free	Free	Free	Free	Free
2907.29.90	4.1%	2.7%	1.3%	Free	Free	Free	Free	Free	Free	Free
2907.30.00	4.1%	2.7%	1.3%	Free	Free	Free	Free	Free	Free	Free
2908.10.10	4.1%	2.7%	1.3%	Free	Free	Free	Free	Free	Free	Free
2908.10.15	6.5%	4.3%	2.1%	Free	Free	Free	Free	Free	Free	Free
2908.10.20	5.7%	3.8%	1.9%	Free	Free	Free	Free	Free	Free	Free
2908.10.25	0.4¢/kg + 8.8%	0.3¢/kg + 6.6%	0.2¢/kg + 4.4%	0.1¢/kg + 2.2%	Free	Free	Free	Free	Free	Free
2908.10.35	6.5%	4.3%	2.1%	Free	Free	Free	Free	Free	Free	Free
2908.10.60	0.4¢/kg + 8.8%	0.3¢/kg + 6.6%	0.2¢/kg + 4.4%	0.1¢/kg + 2.2%	Free	Free	Free	Free	Free	Free
2908.20.04	4.1%	2.7%	1.3%	Free	Free	Free	Free	Free	Free	Free
2908.20.15	0.4¢/kg + 8.8%	0.3¢/kg + 6.6%	0.2¢/kg + 4.4%	0.1¢/kg + 2.2%	Free	Free	Free	Free	Free	Free
2908.20.20	6.5%	4.3%	2.1%	Free	Free	Free	Free	Free	Free	Free
2908.20.60	0.4¢/kg + 8.8%	0.3¢/kg + 6.6%	0.2¢/kg + 4.4%	0.1¢/kg + 2.2%	Free	Free	Free	Free	Free	Free
2908.90.04	4.1%	2.7%	1.3%	Free	Free	Free	Free	Free	Free	Free
2908.90.08	4.1%	2.7%	1.3%	Free	Free	Free	Free	Free	Free	Free
2908.90.24	4.1%	2.7%	1.3%	Free	Free	Free	Free	Free	Free	Free
2908.90.28	4.1%	2.7%	1.3%	Free	Free	Free	Free	Free	Free	Free
2908.90.30	6.5%	4.3%	2.1%	Free	Free	Free	Free	Free	Free	Free
2908.90.40	6.5%	4.3%	2.1%	Free	Free	Free	Free	Free	Free	Free
2908.90.50	0.4¢/kg + 8.8%	0.3¢/kg + 6.6%	0.2¢/kg + 4.4%	0.1¢/kg + 2.2%	Free	Free	Free	Free	Free	Free

Annex II (continued)
-48-

HTS Subheading	December 17, 2001	2002	2003	2004	2005	2006	2007	2008	2009	2010
2909.11.00	0.5%	Free	Free	Free	Free	Free	Free	Free	Free	Free
2909.19.14	4.1%	2.7%	1.3%	Free	Free	Free	Free	Free	Free	Free
2909.19.18	4.1%	2.7%	1.3%	Free	Free	Free	Free	Free	Free	Free
2909.19.60	6.1%	4.1%	2%	Free	Free	Free	Free	Free	Free	Free
2909.20.00	1.8%	Free	Free	Free	Free	Free	Free	Free	Free	Free
2909.30.05	4.1%	2.7%	1.3%	Free	Free	Free	Free	Free	Free	Free
2909.30.07	9%	6.7%	4.5%	2.2%	Free	Free	Free	Free	Free	Free
2909.30.10	4.1%	2.7%	1.3%	Free	Free	Free	Free	Free	Free	Free
2909.30.20	5.6%	3.7%	1.8%	Free	Free	Free	Free	Free	Free	Free
2909.30.30	6.3%	4.2%	2.1%	Free	Free	Free	Free	Free	Free	Free
2909.30.40	6.5%	4.3%	2.1%	Free	Free	Free	Free	Free	Free	Free
2909.30.60	9%	6.7%	4.5%	2.2%	Free	Free	Free	Free	Free	Free
2909.41.00	6.1%	4.1%	2%	Free	Free	Free	Free	Free	Free	Free
2909.42.00	6.1%	4.1%	2%	Free	Free	Free	Free	Free	Free	Free
2909.43.00	6.1%	4.1%	2%	Free	Free	Free	Free	Free	Free	Free
2909.44.00	6.1%	4.1%	2%	Free	Free	Free	Free	Free	Free	Free
2909.49.10	6.5%	4.3%	2.1%	Free	Free	Free	Free	Free	Free	Free
2909.49.15	9%	6.7%	4.5%	2.2%	Free	Free	Free	Free	Free	Free
2909.49.20	1.8%	Free	Free	Free	Free	Free	Free	Free	Free	Free
2909.49.60	6.1%	4.1%	2%	Free	Free	Free	Free	Free	Free	Free
2909.50.10	4.1%	2.7%	1.3%	Free	Free	Free	Free	Free	Free	Free
2909.50.20	4.1%	2.7%	1.3%	Free	Free	Free	Free	Free	Free	Free
2909.50.40	2.4%	Free	Free	Free	Free	Free	Free	Free	Free	Free
2909.50.45	6.5%	4.3%	2.1%	Free	Free	Free	Free	Free	Free	Free
2909.50.50	9%	6.7%	4.5%	2.2%	Free	Free	Free	Free	Free	Free
2909.60.10	6.5%	4.3%	2.1%	Free	Free	Free	Free	Free	Free	Free
2909.60.20	9%	6.7%	4.5%	2.2%	Free	Free	Free	Free	Free	Free
2909.60.50	1.8%	Free	Free	Free	Free	Free	Free	Free	Free	Free
2910.10.00	4.1%	2.7%	1.3%	Free	Free	Free	Free	Free	Free	Free
2910.20.00	6%	4%	2%	Free	Free	Free	Free	Free	Free	Free
2910.30.00	1.8%	Free	Free	Free	Free	Free	Free	Free	Free	Free

Annex II (continued)
-49-

HTS Subheading	December 17, 2001	2002	2003	2004	2005	2006	2007	2008	2009	2010
2910.90.10	2.3%	Free	Free	Free	Free	Free	Free	Free	Free	Free
2910.90.20	4.1%	2.7%	1.3%	Free	Free	Free	Free	Free	Free	Free
2910.90.50	2.4%	Free	Free	Free	Free	Free	Free	Free	Free	Free
2911.00.50	3.9%	2.6%	1.3%	Free	Free	Free	Free	Free	Free	Free
2912.11.00	1.4%	Free	Free	Free	Free	Free	Free	Free	Free	Free
2912.12.00	4.1%	2.7%	1.3%	Free	Free	Free	Free	Free	Free	Free
2912.13.00	9%	6.7%	4.5%	2.2%	Free	Free	Free	Free	Free	Free
2912.19.10	4.1%	2.7%	1.3%	Free	Free	Free	Free	Free	Free	Free
2912.19.20	2.4%	Free	Free	Free	Free	Free	Free	Free	Free	Free
2912.19.30	1.8%	Free	Free	Free	Free	Free	Free	Free	Free	Free
2912.19.40	9%	6.7%	4.5%	2.2%	Free	Free	Free	Free	Free	Free
2912.19.50	4.1%	2.7%	1.3%	Free	Free	Free	Free	Free	Free	Free
2912.21.00	4.1%	2.7%	1.3%	Free	Free	Free	Free	Free	Free	Free
2912.29.10	4.1%	2.7%	1.3%	Free	Free	Free	Free	Free	Free	Free
2912.29.60	5.9%	3.9%	1.9%	Free	Free	Free	Free	Free	Free	Free
2912.30.10	5.6%	3.7%	1.8%	Free	Free	Free	Free	Free	Free	Free
2912.30.20	2.4%	Free	Free	Free	Free	Free	Free	Free	Free	Free
2912.30.50	3.8%	2.5%	1.2%	Free	Free	Free	Free	Free	Free	Free
2912.41.00	4.1%	2.7%	1.3%	Free	Free	Free	Free	Free	Free	Free
2912.42.00	7.3%	4.9%	2.4%	Free	Free	Free	Free	Free	Free	Free
2912.49.10	4.1%	2.7%	1.3%	Free	Free	Free	Free	Free	Free	Free
2912.49.25	6%	4%	2%	Free	Free	Free	Free	Free	Free	Free
2912.49.50	2.4%	Free	Free	Free	Free	Free	Free	Free	Free	Free
2912.50.50	4.1%	2.7%	1.3%	Free	Free	Free	Free	Free	Free	Free
2912.60.00	3.8%	2.5%	1.2%	Free	Free	Free	Free	Free	Free	Free
2913.00.40	9%	6.7%	4.5%	2.2%	Free	Free	Free	Free	Free	Free
2913.00.50	4.1%	2.7%	1.3%	Free	Free	Free	Free	Free	Free	Free
2914.11.10	8.6%	6.4%	4.3%	2.1%	Free	Free	Free	Free	Free	Free
2914.12.00	1.5%	Free	Free	Free	Free	Free	Free	Free	Free	Free
2914.13.00	2%	Free	Free	Free	Free	Free	Free	Free	Free	Free
2914.19.00	2%	Free	Free	Free	Free	Free	Free	Free	Free	Free

Annex II (continued)
-50-

HTS Subheading	December 17, 2001	2002	2003	2004	2005	2006	2007	2008	2009	2010
2914.21.20	1.3%	Free	Free	Free	Free	Free	Free	Free	Free	Free
2914.22.10	0.8¢/kg + 6.6%	0.6¢/kg + 4.9%	0.4¢/kg + 3.3%	0.2¢/kg + 1.6%	Free	Free	Free	Free	Free	Free
2914.22.20	4.1%	2.7%	1.3%	Free	Free	Free	Free	Free	Free	Free
2914.23.00	4.1%	2.7%	1.3%	Free	Free	Free	Free	Free	Free	Free
2914.29.10	2%	Free	Free	Free	Free	Free	Free	Free	Free	Free
2914.29.50	2.4%	Free	Free	Free	Free	Free	Free	Free	Free	Free
2914.31.00	6%	4%	2%	Free	Free	Free	Free	Free	Free	Free
2914.39.90	6%	4%	2%	Free	Free	Free	Free	Free	Free	Free
2914.40.10	2%	Free	Free	Free	Free	Free	Free	Free	Free	Free
2914.40.20	5.7%	3.8%	1.9%	Free	Free	Free	Free	Free	Free	Free
2914.40.40	5.7%	3.8%	1.9%	Free	Free	Free	Free	Free	Free	Free
2914.40.90	2.4%	Free	Free	Free	Free	Free	Free	Free	Free	Free
2914.50.30	5.7%	3.8%	1.9%	Free	Free	Free	Free	Free	Free	Free
2914.50.50	2%	Free	Free	Free	Free	Free	Free	Free	Free	Free
2914.69.10	4.1%	2.7%	1.3%	Free	Free	Free	Free	Free	Free	Free
2914.69.20	4.1%	2.7%	1.3%	Free	Free	Free	Free	Free	Free	Free
2914.69.90	5.7%	3.8%	1.9%	Free	Free	Free	Free	Free	Free	Free
2914.70.10	4.1%	2.7%	1.3%	Free	Free	Free	Free	Free	Free	Free
2914.70.40	5.7%	3.8%	1.9%	Free	Free	Free	Free	Free	Free	Free
2914.70.90	2%	Free	Free	Free	Free	Free	Free	Free	Free	Free
2915.11.00	4.1%	2.7%	1.3%	Free	Free	Free	Free	Free	Free	Free
2915.12.00	4.1%	2.7%	1.3%	Free	Free	Free	Free	Free	Free	Free
2915.13.10	6%	4%	2%	Free	Free	Free	Free	Free	Free	Free
2915.13.50	1.8%	Free	Free	Free	Free	Free	Free	Free	Free	Free
2915.21.00	0.9%	Free	Free	Free	Free	Free	Free	Free	Free	Free
2915.22.00	1.8%	Free	Free	Free	Free	Free	Free	Free	Free	Free
2915.23.00	2.1%	Free	Free	Free	Free	Free	Free	Free	Free	Free
2915.24.00	1.7%	Free	Free	Free	Free	Free	Free	Free	Free	Free
2915.29.50	1.4%	Free	Free	Free	Free	Free	Free	Free	Free	Free
2915.31.00	1.8%	Free	Free	Free	Free	Free	Free	Free	Free	Free
2915.32.00	1.9%	Free	Free	Free	Free	Free	Free	Free	Free	Free

Annex II (continued)
-51-

HTS Subheading	December 17, 2001	2002	2003	2004	2005	2006	2007	2008	2009	2010
2915.33.00	7.2%	4.8%	2.4%	Free	Free	Free	Free	Free	Free	Free
2915.34.00	7.2%	4.8%	2.4%	Free	Free	Free	Free	Free	Free	Free
2915.35.00	6.1%	4.1%	2%	Free	Free	Free	Free	Free	Free	Free
2915.39.10	10.1%	7.6%	5%	2.5%	Free	Free	Free	Free	Free	Free
2915.39.20	6%	4%	2%	Free	Free	Free	Free	Free	Free	Free
2915.39.30	6.5%	4.3%	2.1%	Free	Free	Free	Free	Free	Free	Free
2915.39.35	1.2¢/kg + 8.4%	0.9¢/kg + 6.3%	0.6¢/kg + 4.2%	0.3¢/kg + 2.1%	Free	Free	Free	Free	Free	Free
2915.39.40	8.4%	6.3%	4.2%	2.1%	Free	Free	Free	Free	Free	Free
2915.39.45	2.4%	Free	Free	Free	Free	Free	Free	Free	Free	Free
2915.39.47	6.1%	4.1%	2%	Free	Free	Free	Free	Free	Free	Free
2915.39.90	1.8%	Free	Free	Free	Free	Free	Free	Free	Free	Free
2915.40.10	0.9%	Free	Free	Free	Free	Free	Free	Free	Free	Free
2915.40.20	6.5%	4.3%	2.1%	Free	Free	Free	Free	Free	Free	Free
2915.40.30	1.2¢/kg + 8.4%	0.9¢/kg + 6.3%	0.6¢/kg + 4.2%	0.3¢/kg + 2.1%	Free	Free	Free	Free	Free	Free
2915.40.50	1.8%	Free	Free	Free	Free	Free	Free	Free	Free	Free
2915.50.10	2.1%	Free	Free	Free	Free	Free	Free	Free	Free	Free
2915.50.20	6%	4%	2%	Free	Free	Free	Free	Free	Free	Free
2915.50.50	1.8%	Free	Free	Free	Free	Free	Free	Free	Free	Free
2915.60.10	6%	4%	2%	Free	Free	Free	Free	Free	Free	Free
2915.60.50	1%	Free	Free	Free	Free	Free	Free	Free	Free	Free
2915.70.00	2.5%	Free	Free	Free	Free	Free	Free	Free	Free	Free
2915.90.10	2.5%	Free	Free	Free	Free	Free	Free	Free	Free	Free
2915.90.14	2.1%	Free	Free	Free	Free	Free	Free	Free	Free	Free
2915.90.18	2.1%	Free	Free	Free	Free	Free	Free	Free	Free	Free
2915.90.20	6%	4%	2%	Free	Free	Free	Free	Free	Free	Free
2915.90.50	1.9%	Free	Free	Free	Free	Free	Free	Free	Free	Free
2916.11.00	2.1%	Free	Free	Free	Free	Free	Free	Free	Free	Free
2916.12.10	6.5%	4.3%	2.1%	Free	Free	Free	Free	Free	Free	Free
2916.12.50	1.8%	Free	Free	Free	Free	Free	Free	Free	Free	Free
2916.13.00	2.1%	Free	Free	Free	Free	Free	Free	Free	Free	Free
2916.14.20	1.8%	Free	Free	Free	Free	Free	Free	Free	Free	Free

Annex II (continued)
-52-

HTS Subheading	December 17, 2001	2002	2003	2004	2005	2006	2007	2008	2009	2010
2916.15.10	4.8%	3.2%	1.6%	Free	Free	Free	Free	Free	Free	Free
2916.15.50	2.2%	Free	Free	Free	Free	Free	Free	Free	Free	Free
2916.19.10	1.5%	Free	Free	Free	Free	Free	Free	Free	Free	Free
2916.19.20	2.1%	Free	Free	Free	Free	Free	Free	Free	Free	Free
2916.19.30	4.5%	3%	1.5%	Free	Free	Free	Free	Free	Free	Free
2916.19.50	1.8%	Free	Free	Free	Free	Free	Free	Free	Free	Free
2916.20.50	1.8%	Free	Free	Free	Free	Free	Free	Free	Free	Free
2916.31.15	4.8%	3.2%	1.6%	Free	Free	Free	Free	Free	Free	Free
2916.31.20	7.3%	4.9%	2.4%	Free	Free	Free	Free	Free	Free	Free
2916.31.30	6.9%	4.6%	2.3%	Free	Free	Free	Free	Free	Free	Free
2916.31.50	1.2¢/kg + 8.8%	0.9¢/kg + 6.6%	0.6¢/kg + 4.4%	0.3¢/kg + 2.2%	Free	Free	Free	Free	Free	Free
2916.32.10	1.2¢/kg + 8.8%	0.9¢/kg + 6.6%	0.6¢/kg + 4.4%	0.3¢/kg + 2.2%	Free	Free	Free	Free	Free	Free
2916.32.20	4.8%	3.2%	1.6%	Free	Free	Free	Free	Free	Free	Free
2916.34.10	4.8%	3.2%	1.6%	Free	Free	Free	Free	Free	Free	Free
2916.34.15	6.5%	4.3%	2.1%	Free	Free	Free	Free	Free	Free	Free
2916.34.25	6.9%	4.6%	2.3%	Free	Free	Free	Free	Free	Free	Free
2916.35.15	6.5%	4.3%	2.1%	Free	Free	Free	Free	Free	Free	Free
2916.35.25	6.9%	4.6%	2.3%	Free	Free	Free	Free	Free	Free	Free
2916.39.03	4.8%	3.2%	1.6%	Free	Free	Free	Free	Free	Free	Free
2916.39.06	1.2¢/kg + 8.8%	0.9¢/kg + 6.6%	0.6¢/kg + 4.4%	0.3¢/kg + 2.2%	Free	Free	Free	Free	Free	Free
2916.39.08	4.8%	3.2%	1.6%	Free	Free	Free	Free	Free	Free	Free
2916.39.12	6.9%	4.6%	2.3%	Free	Free	Free	Free	Free	Free	Free
2916.39.15	4.8%	3.2%	1.6%	Free	Free	Free	Free	Free	Free	Free
2916.39.16	1.2¢/kg + 8.8%	0.9¢/kg + 6.6%	0.6¢/kg + 4.4%	0.3¢/kg + 2.2%	Free	Free	Free	Free	Free	Free
2916.39.20	6.5%	4.3%	2.1%	Free	Free	Free	Free	Free	Free	Free
2916.39.45	6.9%	4.6%	2.3%	Free	Free	Free	Free	Free	Free	Free
2916.39.75	1.2¢/kg + 8.8%	0.9¢/kg + 6.6%	0.6¢/kg + 4.4%	0.3¢/kg + 2.2%	Free	Free	Free	Free	Free	Free
2917.11.00	1.5%	Free	Free	Free	Free	Free	Free	Free	Free	Free
2917.12.10	9.4%	7%	4.7%	2.3%	Free	Free	Free	Free	Free	Free
2917.12.20	8.8%	6.6%	4.4%	2.2%	Free	Free	Free	Free	Free	Free
2917.12.50	6.9%	4.6%	2.3%	Free	Free	Free	Free	Free	Free	Free

Annex II (continued)
-53-

HTS Subheading	December 17, 2001	2002	2003	2004	2005	2006	2007	2008	2009	2010
2917.13.00	2.4%	Free	Free	Free	Free	Free	Free	Free	Free	Free
2917.14.10	0.7¢/kg + 8%	0.5¢/kg + 6%	0.3¢/kg + 4%	0.1¢/kg + 2%	Free	Free	Free	Free	Free	Free
2917.14.50	2.1%	Free	Free	Free	Free	Free	Free	Free	Free	Free
2917.19.10	4.8%	3.2%	1.6%	Free	Free	Free	Free	Free	Free	Free
2917.19.15	9.5%	7.1%	4.7%	2.3%	Free	Free	Free	Free	Free	Free
2917.19.17	2.1%	Free	Free	Free	Free	Free	Free	Free	Free	Free
2917.19.20	6.9%	4.6%	2.3%	Free	Free	Free	Free	Free	Free	Free
2917.19.23	1.2¢/kg + 8.4%	0.9¢/kg + 6.3%	0.6¢/kg + 4.2%	0.3¢/kg + 2.1%	Free	Free	Free	Free	Free	Free
2917.19.27	1.2¢/kg + 8.4%	0.9¢/kg + 6.3%	0.6¢/kg + 4.2%	0.3¢/kg + 2.1%	Free	Free	Free	Free	Free	Free
2917.19.30	2.4%	Free	Free	Free	Free	Free	Free	Free	Free	Free
2917.19.40	1.1¢/kg + 6.6%	0.7¢/kg + 4.4%	0.3¢/kg + 2.2%	Free	Free	Free	Free	Free	Free	Free
2917.19.70	2%	Free	Free	Free	Free	Free	Free	Free	Free	Free
2917.20.00	2.1%	Free	Free	Free	Free	Free	Free	Free	Free	Free
2917.31.00	8.8%	6.6%	4.4%	2.2%	Free	Free	Free	Free	Free	Free
2917.32.00	8.8%	6.6%	4.4%	2.2%	Free	Free	Free	Free	Free	Free
2917.33.00	8.8%	6.6%	4.4%	2.2%	Free	Free	Free	Free	Free	Free
2917.34.00	8.8%	6.6%	4.4%	2.2%	Free	Free	Free	Free	Free	Free
2917.35.00	0.7¢/kg + 5.4%	0.5¢/kg + 3.6%	0.2¢/kg + 1.8%	Free	Free	Free	Free	Free	Free	Free
2917.36.00	1.2¢/kg + 8.8%	0.9¢/kg + 6.6%	0.6¢/kg + 4.4%	0.3¢/kg + 2.2%	Free	Free	Free	Free	Free	Free
2917.37.00	0.9¢/kg + 7.2%	0.7¢/kg + 5.4%	0.4¢/kg + 3.6%	0.2¢/kg + 1.8%	Free	Free	Free	Free	Free	Free
2917.39.04	4.8%	3.2%	1.6%	Free	Free	Free	Free	Free	Free	Free
2917.39.15	4.8%	3.2%	1.6%	Free	Free	Free	Free	Free	Free	Free
2917.39.17	9.5%	7.1%	4.7%	2.3%	Free	Free	Free	Free	Free	Free
2917.39.20	8.8%	6.6%	4.4%	2.2%	Free	Free	Free	Free	Free	Free
2917.39.30	6.9%	4.6%	2.3%	Free	Free	Free	Free	Free	Free	Free
2917.39.70	9.5%	7.1%	4.7%	2.3%	Free	Free	Free	Free	Free	Free
2918.11.10	3.8%	2.5%	1.2%	Free	Free	Free	Free	Free	Free	Free
2918.11.50	1.7%	Free	Free	Free	Free	Free	Free	Free	Free	Free
2918.13.50	2.2%	Free	Free	Free	Free	Free	Free	Free	Free	Free
2918.14.00	4.5%	3%	1.5%	Free	Free	Free	Free	Free	Free	Free
2918.15.10	4.8%	3.2%	1.6%	Free	Free	Free	Free	Free	Free	Free

Annex II (continued)
-54-

HTS Subheading	December 17, 2001	2002	2003	2004	2005	2006	2007	2008	2009	2010
2918.15.50	1.8%	Free	Free	Free	Free	Free	Free	Free	Free	Free
2918.16.10	4.5%	3%	1.5%	Free	Free	Free	Free	Free	Free	Free
2918.16.50	1.8%	Free	Free	Free	Free	Free	Free	Free	Free	Free
2918.17.50	4.8%	3.2%	1.6%	Free	Free	Free	Free	Free	Free	Free
2918.19.10	4.3%	2.9%	1.4%	Free	Free	Free	Free	Free	Free	Free
2918.19.20	6.9%	4.6%	2.3%	Free	Free	Free	Free	Free	Free	Free
2918.19.30	1.2¢/kg + 8.8%	0.9¢/kg + 6.6%	0.6¢/kg + 4.4%	0.3¢/kg + 2.2%	Free	Free	Free	Free	Free	Free
2918.19.60	2%	Free	Free	Free	Free	Free	Free	Free	Free	Free
2918.19.90	2%	Free	Free	Free	Free	Free	Free	Free	Free	Free
2918.21.10	4.8%	3.2%	1.6%	Free	Free	Free	Free	Free	Free	Free
2918.21.50	1.2¢/kg + 8.8%	0.9¢/kg + 6.6%	0.6¢/kg + 4.4%	0.3¢/kg + 2.2%	Free	Free	Free	Free	Free	Free
2918.22.10	6%	4%	2%	Free	Free	Free	Free	Free	Free	Free
2918.22.50	4.8%	3.2%	1.6%	Free	Free	Free	Free	Free	Free	Free
2918.23.10	4.8%	3.2%	1.6%	Free	Free	Free	Free	Free	Free	Free
2918.23.20	6.5%	4.3%	2.1%	Free	Free	Free	Free	Free	Free	Free
2918.23.30	6.9%	4.6%	2.3%	Free	Free	Free	Free	Free	Free	Free
2918.23.50	1.2¢/kg + 8.8%	0.9¢/kg + 6.6%	0.6¢/kg + 4.4%	0.3¢/kg + 2.2%	Free	Free	Free	Free	Free	Free
2918.29.04	4.3%	2.9%	1.4%	Free	Free	Free	Free	Free	Free	Free
2918.29.20	4.8%	3.2%	1.6%	Free	Free	Free	Free	Free	Free	Free
2918.29.22	4.8%	3.2%	1.6%	Free	Free	Free	Free	Free	Free	Free
2918.29.25	1.2¢/kg + 8.8%	0.9¢/kg + 6.6%	0.6¢/kg + 4.4%	0.3¢/kg + 2.2%	Free	Free	Free	Free	Free	Free
2918.29.30	0.5%	Free	Free	Free	Free	Free	Free	Free	Free	Free
2918.29.65	6.9%	4.6%	2.3%	Free	Free	Free	Free	Free	Free	Free
2918.29,75	1.2¢/kg + 8.8%	0.9¢/kg + 6.6%	0.6¢/kg + 4.4%	0.3¢/kg + 2.2%	Free	Free	Free	Free	Free	Free
2918.30.10	4.3%	2.9%	1.4%	Free	Free	Free	Free	Free	Free	Free
2918.30.25	6.9%	4.6%	2.3%	Free	Free	Free	Free	Free	Free	Free
2918.30.30	1.2¢/kg + 8.8%	0.9¢/kg + 6.6%	0.6¢/kg + 4.4%	0.3¢/kg + 2.2%	Free	Free	Free	Free	Free	Free
2918.30.90	1.8%	Free	Free	Free	Free	Free	Free	Free	Free	Free
2918.90.05	4.3%	2.9%	1.4%	Free	Free	Free	Free	Free	Free	Free
2918.90.18	4.8%	3.2%	1.6%	Free	Free	Free	Free	Free	Free	Free
2918.90.20	6.9%	4.6%	2.3%	Free	Free	Free	Free	Free	Free	Free

Annex II (continued)
-55-

HTS Subheading	December 17, 2001	2002	2003	2004	2005	2006	2007	2008	2009	2010
2918.90.30	4.8%	3.2%	1.6%	Free	Free	Free	Free	Free	Free	Free
2918.90.35	6.5%	4.3%	2.1%	Free	Free	Free	Free	Free	Free	Free
2918.90.43	6.9%	4.6%	2.3%	Free	Free	Free	Free	Free	Free	Free
2918.90.47	1.2¢/kg + 8.8%	0.9¢/kg + 6.6%	0.6¢/kg + 4.4%	0.3¢/kg + 2.2%	Free	Free	Free	Free	Free	Free
2918.90.50	2%	Free	Free	Free	Free	Free	Free	Free	Free	Free
2919.00.25	8.8%	6.6%	4.4%	2.2%	Free	Free	Free	Free	Free	Free
2919.00.30	4.8%	3.2%	1.6%	Free	Free	Free	Free	Free	Free	Free
2919.00.50	1.8%	Free	Free	Free	Free	Free	Free	Free	Free	Free
2920.10.10	4.8%	3.2%	1.6%	Free	Free	Free	Free	Free	Free	Free
2920.10.40	6.6%	4.4%	2.2%	Free	Free	Free	Free	Free	Free	Free
2920.10.50	1.8%	Free	Free	Free	Free	Free	Free	Free	Free	Free
2920.90.10	6.6%	4.4%	2.2%	Free	Free	Free	Free	Free	Free	Free
2920.90.20	4.8%	3.2%	1.6%	Free	Free	Free	Free	Free	Free	Free
2920.90.50	1.8%	Free	Free	Free	Free	Free	Free	Free	Free	Free
2921.11.00	1.8%	Free	Free	Free	Free	Free	Free	Free	Free	Free
2921.12.00	1.8%	Free	Free	Free	Free	Free	Free	Free	Free	Free
2921.19.10	1.8%	Free	Free	Free	Free	Free	Free	Free	Free	Free
2921.19.60	4.8%	3.2%	1.6%	Free	Free	Free	Free	Free	Free	Free
2921.21.00	4.3%	2.9%	1.4%	Free	Free	Free	Free	Free	Free	Free
2921.22.05	4.8%	3.2%	1.6%	Free	Free	Free	Free	Free	Free	Free
2921.22.10	9.5%	7.1%	4.7%	2.3%	Free	Free	Free	Free	Free	Free
2921.22.50	4.8%	3.2%	1.6%	Free	Free	Free	Free	Free	Free	Free
2921.29.00	4.8%	3.2%	1.6%	Free	Free	Free	Free	Free	Free	Free
2921.30.10	6.9%	4.6%	2.3%	Free	Free	Free	Free	Free	Free	Free
2921.30.30	1.2¢/kg + 8.4%	0.9¢/kg + 6.3%	0.6¢/kg + 4.2%	0.3¢/kg + 2.1%	Free	Free	Free	Free	Free	Free
2921.30.50	1.8%	Free	Free	Free	Free	Free	Free	Free	Free	Free
2921.41.10	1.2¢/kg + 7.4%	0.9¢/kg + 5.5%	0.6¢/kg + 3.7%	0.3¢/kg + 1.8%	Free	Free	Free	Free	Free	Free
2921.41.20	0.8¢/kg + 9.1%	0.6¢/kg + 6.8%	0.4¢/kg + 4.5%	0.2¢/kg + 2.2%	Free	Free	Free	Free	Free	Free
2921.42.10	6.6%	4.4%	2.2%	Free	Free	Free	Free	Free	Free	Free
2921.42.15	0.8¢/kg + 9.1%	0.6¢/kg + 6.8%	0.4¢/kg + 4.5%	0.2¢/kg + 2.2%	Free	Free	Free	Free	Free	Free
2921.42.18	4.3%	2.9%	1.4%	Free	Free	Free	Free	Free	Free	Free

Annex II (continued)
-56-

HTS Subheading	December 17, 2001	2002	2003	2004	2005	2006	2007	2008	2009	2010
2921.42.21	0.8¢/kg + 9.1%	0.6¢/kg + 6.8%	0.4¢/kg + 4.5%	0.2¢/kg + 2.2%	Free	Free	Free	Free	Free	Free
2921.42.22	0.8¢/kg + 9.1%	0.6¢/kg + 6.8%	0.4¢/kg + 4.5%	0.2¢/kg + 2.2%	Free	Free	Free	Free	Free	Free
2921.42.23	0.8¢/kg + 9.1%	0.6¢/kg + 6.8%	0.4¢/kg + 4.5%	0.2¢/kg + 2.2%	Free	Free	Free	Free	Free	Free
2921.42.55	6.6%	4.4%	2.2%	Free	Free	Free	Free	Free	Free	Free
2921.42.65	6.9%	4.6%	2.3%	Free	Free	Free	Free	Free	Free	Free
2921.42.90	0.8¢/kg + 9.1%	0.6¢/kg + 6.8%	0.4¢/kg + 4.5%	0.2¢/kg + 2.2%	Free	Free	Free	Free	Free	Free
2921.43.08	4.3%	2.9%	1.4%	Free	Free	Free	Free	Free	Free	Free
2921.43.15	6.9%	4.6%	2.3%	Free	Free	Free	Free	Free	Free	Free
2921.43.19	0.8¢/kg + 9.1%	0.6¢/kg + 6.8%	0.4¢/kg + 4.5%	0.2¢/kg + 2.2%	Free	Free	Free	Free	Free	Free
2921.43.40	6.9%	4.6%	2.3%	Free	Free	Free	Free	Free	Free	Free
2921.43.80	0.8¢/kg + 9.1%	0.6¢/kg + 6.8%	0.4¢/kg + 4.5%	0.2¢/kg + 2.2%	Free	Free	Free	Free	Free	Free
2921.44.10	4.8%	3.2%	1.6%	Free	Free	Free	Free	Free	Free	Free
2921.44.20	6.9%	4.6%	2.3%	Free	Free	Free	Free	Free	Free	Free
2921.44.70	0.8¢/kg + 9.1%	0.6¢/kg + 6.8%	0.4¢/kg + 4.5%	0.2¢/kg + 2.2%	Free	Free	Free	Free	Free	Free
2921.45.10	4.8%	3.2%	1.6%	Free	Free	Free	Free	Free	Free	Free
2921.45.20	4.3%	2.9%	1.4%	Free	Free	Free	Free	Free	Free	Free
2921.45.60	6.9%	4.6%	2.3%	Free	Free	Free	Free	Free	Free	Free
2921.45.90	0.8¢/kg + 9.1%	0.6¢/kg + 6.8%	0.4¢/kg + 4.5%	0.2¢/kg + 2.2%	Free	Free	Free	Free	Free	Free
2921.49.10	4.3%	2.9%	1.4%	Free	Free	Free	Free	Free	Free	Free
2921.49.32	6.6%	4.4%	2.2%	Free	Free	Free	Free	Free	Free	Free
2921.49.37	8.4%	6.3%	4.2%	2.1%	Free	Free	Free	Free	Free	Free
2921.49.43	4.8%	3.2%	1.6%	Free	Free	Free	Free	Free	Free	Free
2921.49.45	6.9%	4.6%	2.3%	Free	Free	Free	Free	Free	Free	Free
2921.49.50	0.8¢/kg + 9.1%	0.6¢/kg + 6.8%	0.4¢/kg + 4.5%	0.2¢/kg + 2.2%	Free	Free	Free	Free	Free	Free
2921.51.10	4.8%	3.2%	1.6%	Free	Free	Free	Free	Free	Free	Free
2921.51.20	4.8%	3.2%	1.6%	Free	Free	Free	Free	Free	Free	Free
2921.51.30	6.9%	4.6%	2.3%	Free	Free	Free	Free	Free	Free	Free
2921.51.50	0.8¢/kg + 9.1%	0.6¢/kg + 6.8%	0.4¢/kg + 4.5%	0.2¢/kg + 2.2%	Free	Free	Free	Free	Free	Free
2921.59.08	4.3%	2.9%	1.4%	Free	Free	Free	Free	Free	Free	Free
2921.59.20	6%	4%	2%	Free	Free	Free	Free	Free	Free	Free
2921.59.30	4.8%	3.2%	1.6%	Free	Free	Free	Free	Free	Free	Free

Annex II (continued)
-57-

HTS Subheading	December 17, 2001	2002	2003	2004	2005	2006	2007	2008	2009	2010
2921.59.40	6.9%	4.6%	2.3%	Free	Free	Free	Free	Free	Free	Free
2921.59.80	0.8¢/kg + 9.1%	0.6¢/kg + 6.8%	0.4¢/kg + 4.5%	0.2¢/kg + 2.2%	Free	Free	Free	Free	Free	Free
2922.11.00	6.3%	4.2%	2.1%	Free	Free	Free	Free	Free	Free	Free
2922.12.00	6.3%	4.2%	2.1%	Free	Free	Free	Free	Free	Free	Free
2922.13.00	6.3%	4.2%	2.1%	Free	Free	Free	Free	Free	Free	Free
2922.19.18	4.8%	3.2%	1.6%	Free	Free	Free	Free	Free	Free	Free
2922.19.20	4.3%	2.9%	1.4%	Free	Free	Free	Free	Free	Free	Free
2922.19.60	6.9%	4.6%	2.3%	Free	Free	Free	Free	Free	Free	Free
2922.19.70	1.2¢/kg + 8%	0.9¢/kg + 6%	0.6¢/kg + 4%	0.3¢/kg + 2%	Free	Free	Free	Free	Free	Free
2922.19.95	4.8%	3.2%	1.6%	Free	Free	Free	Free	Free	Free	Free
2922.21.10	4.3%	2.9%	1.4%	Free	Free	Free	Free	Free	Free	Free
2922.21.40	6.9%	4.6%	2.3%	Free	Free	Free	Free	Free	Free	Free
2922.21.50	1.2¢/kg + 8%	0.9¢/kg + 6%	0.6¢/kg + 4%	0.3¢/kg + 2%	Free	Free	Free	Free	Free	Free
2922.22.10	4.8%	3.2%	1.6%	Free	Free	Free	Free	Free	Free	Free
2922.22.20	6.9%	4.6%	2.3%	Free	Free	Free	Free	Free	Free	Free
2922.22.50	1.2¢/kg + 8%	0.9¢/kg + 6%	0.6¢/kg + 4%	0.3¢/kg + 2%	Free	Free	Free	Free	Free	Free
2922.29.10	4.3%	2.9%	1.4%	Free	Free	Free	Free	Free	Free	Free
2922.29.15	4.8%	3.2%	1.6%	Free	Free	Free	Free	Free	Free	Free
2922.29.26	6.6%	4.4%	2.2%	Free	Free	Free	Free	Free	Free	Free
2922.29.27	4.8%	3.2%	1.6%	Free	Free	Free	Free	Free	Free	Free
2922.29.29	4.8%	3.2%	1.6%	Free	Free	Free	Free	Free	Free	Free
2922.29.60	6.9%	4.6%	2.3%	Free	Free	Free	Free	Free	Free	Free
2922.29.80	1.2¢/kg + 8%	0.9¢/kg + 6%	0.6¢/kg + 4%	0.3¢/kg + 2%	Free	Free	Free	Free	Free	Free
2922.30.10	4.3%	2.9%	1.4%	Free	Free	Free	Free	Free	Free	Free
2922.30.14	6.9%	4.6%	2.3%	Free	Free	Free	Free	Free	Free	Free
2922.30.17	1.2¢/kg + 8%	0.9¢/kg + 6%	0.6¢/kg + 4%	0.3¢/kg + 2%	Free	Free	Free	Free	Free	Free
2922.30.25	6.9%	4.6%	2.3%	Free	Free	Free	Free	Free	Free	Free
2922.30.45	1.2¢/kg + 8%	0.9¢/kg + 6%	0.6¢/kg + 4%	0.3¢/kg + 2%	Free	Free	Free	Free	Free	Free
2922.30.50	4.8%	3.2%	1.6%	Free	Free	Free	Free	Free	Free	Free
2922.41.00	1.8%	Free	Free	Free	Free	Free	Free	Free	Free	Free
2922.42.10	6.5%	4.3%	2.1%	Free	Free	Free	Free	Free	Free	Free

Annex II (continued)
-58-

HTS Subheading	December 17, 2001	2002	2003	2004	2005	2006	2007	2008	2009	2010
2922.42.50	1.8%	Free	Free	Free	Free	Free	Free	Free	Free	Free
2922.43.10	6.9%	4.6%	2.3%	Free	Free	Free	Free	Free	Free	Free
2922.43.50	1.2¢/kg + 8%	0.9¢/kg + 6%	0.6¢/kg + 4%	0.3¢/kg + 2%	Free	Free	Free	Free	Free	Free
2922.49.10	4.3%	2.9%	1.4%	Free	Free	Free	Free	Free	Free	Free
2922.49.27	4.8%	3.2%	1.6%	Free	Free	Free	Free	Free	Free	Free
2922.49.30	6.9%	4.6%	2.3%	Free	Free	Free	Free	Free	Free	Free
2922.49.37	1.2¢/kg + 8%	0.9¢/kg + 6%	0.6¢/kg + 4%	0.3¢/kg + 2%	Free	Free	Free	Free	Free	Free
2922.49.40	2.1%	Free	Free	Free	Free	Free	Free	Free	Free	Free
2922.49.80	1.8%	Free	Free	Free	Free	Free	Free	Free	Free	Free
2922.50.10	4.3%	2.9%	1.4%	Free	Free	Free	Free	Free	Free	Free
2922.50.11	1.2¢/kg + 8%	0.9¢/kg + 6%	0.6¢/kg + 4%	0.3¢/kg + 2%	Free	Free	Free	Free	Free	Free
2922.50.14	4.8%	3.2%	1.6%	Free	Free	Free	Free	Free	Free	Free
2922.50.17	4.8%	3.2%	1.6%	Free	Free	Free	Free	Free	Free	Free
2922.50.19	4.8%	3.2%	1.6%	Free	Free	Free	Free	Free	Free	Free
2922.50.25	4.8%	3.2%	1.6%	Free	Free	Free	Free	Free	Free	Free
2922.50.35	6.9%	4.6%	2.3%	Free	Free	Free	Free	Free	Free	Free
2922.50.40	1.2¢/kg + 8%	0.9¢/kg + 6%	0.6¢/kg + 4%	0.3¢/kg + 2%	Free	Free	Free	Free	Free	Free
2922.50.50	4.8%	3.2%	1.6%	Free	Free	Free	Free	Free	Free	Free
2923.10.00	1.8%	Free	Free	Free	Free	Free	Free	Free	Free	Free
2923.20.20	2.5%	Free	Free	Free	Free	Free	Free	Free	Free	Free
2923.90.00	4.6%	3.1%	1.5%	Free	Free	Free	Free	Free	Free	Free
2924.10.10	1.8%	Free	Free	Free	Free	Free	Free	Free	Free	Free
2924.10.80	4.8%	3.2%	1.6%	Free	Free	Free	Free	Free	Free	Free
2924.21.04	4.8%	3.2%	1.6%	Free	Free	Free	Free	Free	Free	Free
2924.21.16	6.9%	4.6%	2.3%	Free	Free	Free	Free	Free	Free	Free
2924.21.18	1.2¢/kg + 8.8%	0.9¢/kg + 6.6%	0.6¢/kg + 4.4%	0.3¢/kg + 2.2%	Free	Free	Free	Free	Free	Free
2924.21.20	6.9%	4.6%	2.3%	Free	Free	Free	Free	Free	Free	Free
2924.21.45	1.2¢/kg + 8.8%	0.9¢/kg + 6.6%	0.6¢/kg + 4.4%	0.3¢/kg + 2.2%	Free	Free	Free	Free	Free	Free
2924.21.50	4.8%	3.2%	1.6%	Free	Free	Free	Free	Free	Free	Free
2924.22.00	1.2¢/kg + 8.8%	0.9¢/kg + 6.6%	0.6¢/kg + 4.4%	0.3¢/kg + 2.2%	Free	Free	Free	Free	Free	Free
2924.29.05	3.9%	2.6%	1.3%	Free	Free	Free	Free	Free	Free	Free

Annex II (continued)
-59-

HTS Subheading	December 17, 2001	2002	2003	2004	2005	2006	2007	2008	2009	2010
2924.29.10	1.2¢/kg + 8.8%	0.9¢/kg + 6.6%	0.6¢/kg + 4.4%	0.3¢/kg + 2.2%	Free	Free	Free	Free	Free	Free
2924.29.20	4.8%	3.2%	1.6%	Free	Free	Free	Free	Free	Free	Free
2924.29.31	4.3%	2.9%	1.4%	Free	Free	Free	Free	Free	Free	Free
2924.29.36	7.1%	4.7%	2.3%	Free	Free	Free	Free	Free	Free	Free
2924.29.41	4.8%	3.2%	1.6%	Free	Free	Free	Free	Free	Free	Free
2924.29.47	6.8%	4.5%	2.2%	Free	Free	Free	Free	Free	Free	Free
2924.29.52	6.6%	4.4%	2.2%	Free	Free	Free	Free	Free	Free	Free
2924.29.62	4.8%	3.2%	1.6%	Free	Free	Free	Free	Free	Free	Free
2924.29.65	6.9%	4.6%	2.3%	Free	Free	Free	Free	Free	Free	Free
2924.29.70	6.9%	4.6%	2.3%	Free	Free	Free	Free	Free	Free	Free
2924.29.75	1.2¢/kg + 8.8%	0.9¢/kg + 6.6%	0.6¢/kg + 4.4%	0.3¢/kg + 2.2%	Free	Free	Free	Free	Free	Free
2924.29.90	4.8%	3.2%	1.6%	Free	Free	Free	Free	Free	Free	Free
2925.11.00	4.8%	3.2%	1.6%	Free	Free	Free	Free	Free	Free	Free
2925.19.10	7.4%	4.9%	2.4%	Free	Free	Free	Free	Free	Free	Free
2925.19.40	7.4%	4.9%	2.4%	Free	Free	Free	Free	Free	Free	Free
2925.19.90	1.8%	Free	Free	Free	Free	Free	Free	Free	Free	Free
2925.20.10	4.8%	3.2%	1.6%	Free	Free	Free	Free	Free	Free	Free
2925.20.20	4.8%	3.2%	1.6%	Free	Free	Free	Free	Free	Free	Free
2925.20.60	7.4%	4.9%	2.4%	Free	Free	Free	Free	Free	Free	Free
2925.20.90	1.8%	Free	Free	Free	Free	Free	Free	Free	Free	Free
2926.10.00	6.3%	4.2%	2.1%	Free	Free	Free	Free	Free	Free	Free
2926.90.05	4.8%	3.2%	1.6%	Free	Free	Free	Free	Free	Free	Free
2926.90.08	4.8%	3.2%	1.6%	Free	Free	Free	Free	Free	Free	Free
2926.90.12	4.8%	3.2%	1.6%	Free	Free	Free	Free	Free	Free	Free
2926.90.14	6.9%	4.6%	2.3%	Free	Free	Free	Free	Free	Free	Free
2926.90.17	9.5%	7.1%	4.7%	2.3%	Free	Free	Free	Free	Free	Free
2926.90.21	6.2%	4.1%	2%	Free	Free	Free	Free	Free	Free	Free
2926.90.23	4.8%	3.2%	1.6%	Free	Free	Free	Free	Free	Free	Free
2926.90.25	6.9%	4.6%	2.3%	Free	Free	Free	Free	Free	Free	Free
2926.90.30	6.6%	4.4%	2.2%	Free	Free	Free	Free	Free	Free	Free
2926.90.44	6.9%	4.6%	2.3%	Free	Free	Free	Free	Free	Free	Free

Annex II (continued)
-60-

HTS Subheading	December 17, 2001	2002	2003	2004	2005	2006	2007	2008	2009	2010
2926.90.47	9.5%	7.1%	4.7%	2.3%	Free	Free	Free	Free	Free	Free
2927.00.06	4.3%	2.9%	1.4%	Free	Free	Free	Free	Free	Free	Free
2927.00.15	1.8%	Free	Free	Free	Free	Free	Free	Free	Free	Free
2927.00.25	4.8%	3.2%	1.6%	Free	Free	Free	Free	Free	Free	Free
2927.00.30	6.6%	4.4%	2.2%	Free	Free	Free	Free	Free	Free	Free
2927.00.40	6.9%	4.6%	2.3%	Free	Free	Free	Free	Free	Free	Free
2927.00.50	9.5%	7.1%	4.7%	2.3%	Free	Free	Free	Free	Free	Free
2928.00.10	1.8%	Free	Free	Free	Free	Free	Free	Free	Free	Free
2928.00.25	4.8%	3.2%	1.6%	Free	Free	Free	Free	Free	Free	Free
2928.00.30	1.8%	Free	Free	Free	Free	Free	Free	Free	Free	Free
2928.00.50	4.8%	3.2%	1.6%	Free	Free	Free	Free	Free	Free	Free
2929.10.10	4.8%	3.2%	1.6%	Free	Free	Free	Free	Free	Free	Free
2929.10.15	1.2¢/kg + 7.4%	0.9¢/kg + 5.5%	0.6¢/kg + 3.7%	0.3¢/kg + 1.8%	Free	Free	Free	Free	Free	Free
2929.10.20	4.3%	2.9%	1.4%	Free	Free	Free	Free	Free	Free	Free
2929.10.30	0.9¢/kg + 8.3%	0.7¢/kg + 6.2%	0.4¢/kg + 4.1%	0.2¢/kg + 2%	Free	Free	Free	Free	Free	Free
2929.10.35	5.3%	3.5%	1.7%	Free	Free	Free	Free	Free	Free	Free
2929.10.55	6.9%	4.6%	2.3%	Free	Free	Free	Free	Free	Free	Free
2929.10.80	0.9¢/kg + 8.3%	0.7¢/kg + 6.2%	0.4¢/kg + 4.1%	0.2¢/kg + 2%	Free	Free	Free	Free	Free	Free
2929.90.15	6.9%	4.6%	2.3%	Free	Free	Free	Free	Free	Free	Free
2929.90.20	0.9¢/kg + 8.3%	0.7¢/kg + 6.2%	0.4¢/kg + 4.1%	0.2¢/kg + 2%	Free	Free	Free	Free	Free	Free
2929.90.50	4.8%	3.2%	1.6%	Free	Free	Free	Free	Free	Free	Free
2930.10.00	1.8%	Free	Free	Free	Free	Free	Free	Free	Free	Free
2930.20.10	6.9%	4.6%	2.3%	Free	Free	Free	Free	Free	Free	Free
2930.20.20	4.8%	3.2%	1.6%	Free	Free	Free	Free	Free	Free	Free
2930.20.90	1.8%	Free	Free	Free	Free	Free	Free	Free	Free	Free
2930.30.60	1.8%	Free	Free	Free	Free	Free	Free	Free	Free	Free
2930.90.10	6.6%	4.4%	2.2%	Free	Free	Free	Free	Free	Free	Free
2930.90.24	4.8%	3.2%	1.6%	Free	Free	Free	Free	Free	Free	Free
2930.90.29	4.8%	3.2%	1.6%	Free	Free	Free	Free	Free	Free	Free
2930.90.30	1.8%	Free	Free	Free	Free	Free	Free	Free	Free	Free
2930.90.44	4.8%	3.2%	1.6%	Free	Free	Free	Free	Free	Free	Free

Annex II (continued)
-61-

HTS Subheading	December 17, 2001	2002	2003	2004	2005	2006	2007	2008	2009	2010
2930.90.49	2.1%	Free	Free	Free	Free	Free	Free	Free	Free	Free
2930.90.90	1.8%	Free	Free	Free	Free	Free	Free	Free	Free	Free
2931.00.10	1.1¢/kg + 6.6%	0.7¢/kg + 4.4%	0.3¢/kg + 2.2%	Free	Free	Free	Free	Free	Free	Free
2931.00.15	4.3%	2.9%	1.4%	Free	Free	Free	Free	Free	Free	Free
2931.00.22	4.8%	3.2%	1.6%	Free	Free	Free	Free	Free	Free	Free
2931.00.25	6.2%	4.1%	2%	Free	Free	Free	Free	Free	Free	Free
2931.00.27	4.8%	3.2%	1.6%	Free	Free	Free	Free	Free	Free	Free
2931.00.30	6.9%	4.6%	2.3%	Free	Free	Free	Free	Free	Free	Free
2931.00.60	8.8%	6.6%	4.4%	2.2%	Free	Free	Free	Free	Free	Free
2931.00.90	1.8%	Free	Free	Free	Free	Free	Free	Free	Free	Free
2932.11.00	1.8%	Free	Free	Free	Free	Free	Free	Free	Free	Free
2932.13.00	1.8%	Free	Free	Free	Free	Free	Free	Free	Free	Free
2932.19.10	4.8%	3.2%	1.6%	Free	Free	Free	Free	Free	Free	Free
2932.19.50	1.8%	Free	Free	Free	Free	Free	Free	Free	Free	Free
2932.21.00	9.5%	7.1%	4.7%	2.3%	Free	Free	Free	Free	Free	Free
2932.29.10	6.6%	4.4%	2.2%	Free	Free	Free	Free	Free	Free	Free
2932.29.20	4.8%	3.2%	1.6%	Free	Free	Free	Free	Free	Free	Free
2932.29.25	1.2¢/kg + 8.3%	0.9¢/kg + 6.2%	0.6¢/kg + 4.1%	0.3¢/kg + 2%	Free	Free	Free	Free	Free	Free
2932.29.30	6.9%	4.6%	2.3%	Free	Free	Free	Free	Free	Free	Free
2932.29.45	1.2¢/kg + 8.3%	0.9¢/kg + 6.2%	0.6¢/kg + 4.1%	0.3¢/kg + 2%	Free	Free	Free	Free	Free	Free
2932.29.50	1.8%	Free	Free	Free	Free	Free	Free	Free	Free	Free
2932.91.00	6.9%	4.6%	2.3%	Free	Free	Free	Free	Free	Free	Free
2932.92.00	6.9%	4.6%	2.3%	Free	Free	Free	Free	Free	Free	Free
2932.93.00	2.4%	Free	Free	Free	Free	Free	Free	Free	Free	Free
2932.94.00	4.8%	3.2%	1.6%	Free	Free	Free	Free	Free	Free	Free
2932.99.08	4.8%	3.2%	1.6%	Free	Free	Free	Free	Free	Free	Free
2932.99.20	6.2%	4.1%	2%	Free	Free	Free	Free	Free	Free	Free
2932.99.35	4.8%	3.2%	1.6%	Free	Free	Free	Free	Free	Free	Free
2932.99.39	4.3%	2.9%	1.4%	Free	Free	Free	Free	Free	Free	Free
2932.99.60	6.9%	4.6%	2.3%	Free	Free	Free	Free	Free	Free	Free
2932.99.70	1.2¢/kg + 8.3%	0.9¢/kg + 6.2%	0.6¢/kg + 4.1%	0.3¢/kg + 2%	Free	Free	Free	Free	Free	Free

Annex II (continued)
-62-

HTS Subheading	December 17, 2001	2002	2003	2004	2005	2006	2007	2008	2009	2010
2932.99.90	1.8%	Free	Free	Free	Free	Free	Free	Free	Free	Free
2933.11.00	4.8%	3.2%	1.6%	Free	Free	Free	Free	Free	Free	Free
2933.19.08	4.3%	2.9%	1.4%	Free	Free	Free	Free	Free	Free	Free
2933.19.23	6.9%	4.6%	2.3%	Free	Free	Free	Free	Free	Free	Free
2933.19.30	4.8%	3.2%	1.6%	Free	Free	Free	Free	Free	Free	Free
2933.19.35	4.8%	3.2%	1.6%	Free	Free	Free	Free	Free	Free	Free
2933.19.37	6.9%	4.6%	2.3%	Free	Free	Free	Free	Free	Free	Free
2933.19.43	1.2¢/kg + 8.3%	0.9¢/kg + 6.2%	0.6¢/kg + 4.1%	0.3¢/kg + 2%	Free	Free	Free	Free	Free	Free
2933.19.45	1.8%	Free	Free	Free	Free	Free	Free	Free	Free	Free
2933.19.90	4.8%	3.2%	1.6%	Free	Free	Free	Free	Free	Free	Free
2933.21.00	4.8%	3.2%	1.6%	Free	Free	Free	Free	Free	Free	Free
2933.29.10	4.3%	2.9%	1.4%	Free	Free	Free	Free	Free	Free	Free
2933.29.20	4.5%	3%	1.5%	Free	Free	Free	Free	Free	Free	Free
2933.29.35	6.9%	4.6%	2.3%	Free	Free	Free	Free	Free	Free	Free
2933.29.43	1.2¢/kg + 8.3%	0.9¢/kg + 6.2%	0.6¢/kg + 4.1%	0.3¢/kg + 2%	Free	Free	Free	Free	Free	Free
2933.29.45	1.8%	Free	Free	Free	Free	Free	Free	Free	Free	Free
2933.29.90	4.8%	3.2%	1.6%	Free	Free	Free	Free	Free	Free	Free
2933.32.10	1.2¢/kg + 8.3%	0.9¢/kg + 6.2%	0.6¢/kg + 4.1%	0.3¢/kg + 2%	Free	Free	Free	Free	Free	Free
2933.32.50	6.9%	4.6%	2.3%	Free	Free	Free	Free	Free	Free	Free
2933.39.20	4.3%	2.9%	1.4%	Free	Free	Free	Free	Free	Free	Free
2933.39.21	6.2%	4.1%	2%	Free	Free	Free	Free	Free	Free	Free
2933.39.23	4.8%	3.2%	1.6%	Free	Free	Free	Free	Free	Free	Free
2933.39.25	6.9%	4.6%	2.3%	Free	Free	Free	Free	Free	Free	Free
2933.39.27	6.6%	4.4%	2.2%	Free	Free	Free	Free	Free	Free	Free
2933.39.30	8.4%	6.3%	4.2%	2.1%	Free	Free	Free	Free	Free	Free
2933.39.41	4.8%	3.2%	1.6%	Free	Free	Free	Free	Free	Free	Free
2933.39.61	6.9%	4.6%	2.3%	Free	Free	Free	Free	Free	Free	Free
2933.39.91	1.2¢/kg + 8.3%	0.9¢/kg + 6.2%	0.6¢/kg + 4.1%	0.3¢/kg + 2%	Free	Free	Free	Free	Free	Free
2933.40.08	1.2¢/kg + 8.3%	0.9¢/kg + 6.2%	0.6¢/kg + 4.1%	0.3¢/kg + 2%	Free	Free	Free	Free	Free	Free
2933.40.10	4.8%	3.2%	1.6%	Free	Free	Free	Free	Free	Free	Free
2933.40.15	4.3%	2.9%	1.4%	Free	Free	Free	Free	Free	Free	Free

Annex II (continued)
-63-

HTS Subheading	December 17, 2001	2002	2003	2004	2005	2006	2007	2008	2009	2010
2933.40.20	4.8%	3.2%	1.6%	Free	Free	Free	Free	Free	Free	Free
2933.40.26	4.8%	3.2%	1.6%	Free	Free	Free	Free	Free	Free	Free
2933.40.30	6.2%	4.1%	2%	Free	Free	Free	Free	Free	Free	Free
2933.40.60	6.9%	4.6%	2.3%	Free	Free	Free	Free	Free	Free	Free
2933.40.70	1.2¢/kg + 8.3%	0.9¢/kg + 6.2%	0.6¢/kg + 4.1%	0.3¢/kg + 2%	Free	Free	Free	Free	Free	Free
2933.51.90	1.8%	Free	Free	Free	Free	Free	Free	Free	Free	Free
2933.59.10	6.9%	4.6%	2.3%	Free	Free	Free	Free	Free	Free	Free
2933.59.15	6.6%	4.4%	2.2%	Free	Free	Free	Free	Free	Free	Free
2933.59.18	4.8%	3.2%	1.6%	Free	Free	Free	Free	Free	Free	Free
2933.59.21	4.8%	3.2%	1.6%	Free	Free	Free	Free	Free	Free	Free
2933.59.22	4.8%	3.2%	1.6%	Free	Free	Free	Free	Free	Free	Free
2933.59.36	4.8%	3.2%	1.6%	Free	Free	Free	Free	Free	Free	Free
2933.59.45	8.4%	6.3%	4.2%	2.1%	Free	Free	Free	Free	Free	Free
2933.59.53	4.8%	3.2%	1.6%	Free	Free	Free	Free	Free	Free	Free
2933.59.59	1.8%	Free	Free	Free	Free	Free	Free	Free	Free	Free
2933.59.70	6.9%	4.6%	2.3%	Free	Free	Free	Free	Free	Free	Free
2933.59.80	1.2¢/kg + 8.3%	0.9¢/kg + 6.2%	0.6¢/kg + 4.1%	0.3¢/kg + 2%	Free	Free	Free	Free	Free	Free
2933.59.95	4.8%	3.2%	1.6%	Free	Free	Free	Free	Free	Free	Free
2933.61.00	1.7%	Free	Free	Free	Free	Free	Free	Free	Free	Free
2933.69.60	1.7%	Free	Free	Free	Free	Free	Free	Free	Free	Free
2933.71.00	0.9¢/kg + 5.9%	0.6¢/kg + 3.9%	0.3¢/kg + 1.9%	Free	Free	Free	Free	Free	Free	Free
2933.79.09	6.9%	4.6%	2.3%	Free	Free	Free	Free	Free	Free	Free
2933.79.15	1.2¢/kg + 8.3%	0.9¢/kg + 6.2%	0.6¢/kg + 4.1%	0.3¢/kg + 2%	Free	Free	Free	Free	Free	Free
2933.79.20	2.1%	Free	Free	Free	Free	Free	Free	Free	Free	Free
2933.79.30	4.1%	2.7%	1.3%	Free	Free	Free	Free	Free	Free	Free
2933.79.80	4.8%	3.2%	1.6%	Free	Free	Free	Free	Free	Free	Free
2933.90.06	6.3%	4.2%	2.1%	Free	Free	Free	Free	Free	Free	Free
2933.90.13	4.3%	2.9%	1.4%	Free	Free	Free	Free	Free	Free	Free
2933.90.14	4.8%	3.2%	1.6%	Free	Free	Free	Free	Free	Free	Free
2933.90.17	6.6%	4.4%	2.2%	Free	Free	Free	Free	Free	Free	Free
2933.90.22	6.9%	4.6%	2.3%	Free	Free	Free	Free	Free	Free	Free

Annex II (continued)
-64-

HTS Subheading	December 17, 2001	2002	2003	2004	2005	2006	2007	2008	2009	2010
2933.90.24	4.8%	3.2%	1.6%	Free	Free	Free	Free	Free	Free	Free
2933.90.26	4.8%	3.2%	1.6%	Free	Free	Free	Free	Free	Free	Free
2933.90.46	4.8%	3.2%	1.6%	Free	Free	Free	Free	Free	Free	Free
2933.90.53	4.8%	3.2%	1.6%	Free	Free	Free	Free	Free	Free	Free
2933.90.55	4.8%	3.2%	1.6%	Free	Free	Free	Free	Free	Free	Free
2933.90.61	8.4%	6.3%	4.2%	2.1%	Free	Free	Free	Free	Free	Free
2933.90.65	4.8%	3.2%	1.6%	Free	Free	Free	Free	Free	Free	Free
2933.90.70	4.8%	3.2%	1.6%	Free	Free	Free	Free	Free	Free	Free
2933.90.75	4.8%	3.2%	1.6%	Free	Free	Free	Free	Free	Free	Free
2933.90.79	6.9%	4.6%	2.3%	Free	Free	Free	Free	Free	Free	Free
2933.90.82	1.2¢/kg + 8.3%	0.9¢/kg + 6.2%	0.6¢/kg + 4.1%	0.3¢/kg + 2%	Free	Free	Free	Free	Free	Free
2933.90.85	1.8%	Free	Free	Free	Free	Free	Free	Free	Free	Free
2933.90.87	4.7%	3.1%	1.5%	Free	Free	Free	Free	Free	Free	Free
2933.90.90	1.8%	Free	Free	Free	Free	Free	Free	Free	Free	Free
2933.90.97	4.8%	3.2%	1.6%	Free	Free	Free	Free	Free	Free	Free
2934.10.10	6.9%	4.6%	2.3%	Free	Free	Free	Free	Free	Free	Free
2934.10.20	1.2¢/kg + 8.3%	0.9¢/kg + 6.2%	0.6¢/kg + 4.1%	0.3¢/kg + 2%	Free	Free	Free	Free	Free	Free
2934.10.90	4.8%	3.2%	1.6%	Free	Free	Free	Free	Free	Free	Free
2934.20.05	1.2¢/kg + 8.3%	0.9¢/kg + 6.2%	0.6¢/kg + 4.1%	0.3¢/kg + 2%	Free	Free	Free	Free	Free	Free
2934.20.10	7.4%	4.9%	2.4%	Free	Free	Free	Free	Free	Free	Free
2934.20.15	1.2¢/kg + 8.3%	0.9¢/kg + 6.2%	0.6¢/kg + 4.1%	0.3¢/kg + 2%	Free	Free	Free	Free	Free	Free
2934.20.20	0.3¢/kg + 6.6%	0.2¢/kg + 4.4%	0.1¢/kg + 2.2%	Free	Free	Free	Free	Free	Free	Free
2934.20.30	4.3%	2.9%	1.4%	Free	Free	Free	Free	Free	Free	Free
2934.20.35	6.2%	4.1%	2%	Free	Free	Free	Free	Free	Free	Free
2934.20.40	6.9%	4.6%	2.3%	Free	Free	Free	Free	Free	Free	Free
2934.20.80	1.2¢/kg + 8.3%	0.9¢/kg + 6.2%	0.6¢/kg + 4.1%	0.3¢/kg + 2%	Free	Free	Free	Free	Free	Free
2934.30.12	4.8%	3.2%	1.6%	Free	Free	Free	Free	Free	Free	Free
2934.30.23	8.4%	6.3%	4.2%	2.1%	Free	Free	Free	Free	Free	Free
2934.30.27	4.8%	3.2%	1.6%	Free	Free	Free	Free	Free	Free	Free
2934.30.43	6.9%	4.6%	2.3%	Free	Free	Free	Free	Free	Free	Free
2934.30.50	1.2¢/kg + 8.3%	0.9¢/kg + 6.2%	0.6¢/kg + 4.1%	0.3¢/kg + 2%	Free	Free	Free	Free	Free	Free

Annex II (continued)
-65-

HTS Subheading	December 17, 2001	2002	2003	2004	2005	2006	2007	2008	2009	2010
2934.90.05	4.3%	2.9%	1.4%	Free	Free	Free	Free	Free	Free	Free
2934.90.06	4.8%	3.2%	1.6%	Free	Free	Free	Free	Free	Free	Free
2934.90.08	1.2¢/kg + 8.3%	0.9¢/kg + 6.2%	0.6¢/kg + 4.1%	0.3¢/kg + 2%	Free	Free	Free	Free	Free	Free
2934.90.11	4.8%	3.2%	1.6%	Free	Free	Free	Free	Free	Free	Free
2934.90.12	6.2%	4.1%	2%	Free	Free	Free	Free	Free	Free	Free
2934.90.15	6.9%	4.6%	2.3%	Free	Free	Free	Free	Free	Free	Free
2934.90.16	6.6%	4.4%	2.2%	Free	Free	Free	Free	Free	Free	Free
2934.90.18	6.1%	4.1%	2%	Free	Free	Free	Free	Free	Free	Free
2934.90.20	4.8%	3.2%	1.6%	Free	Free	Free	Free	Free	Free	Free
2934.90.30	4.8%	3.2%	1.6%	Free	Free	Free	Free	Free	Free	Free
2934.90.39	6.9%	4.6%	2.3%	Free	Free	Free	Free	Free	Free	Free
2934.90.44	1.2¢/kg + 8.3%	0.9¢/kg + 6.2%	0.6¢/kg + 4.1%	0.3¢/kg + 2%	Free	Free	Free	Free	Free	Free
2934.90.47	1.8%	Free	Free	Free	Free	Free	Free	Free	Free	Free
2934.90.90	4.8%	3.2%	1.6%	Free	Free	Free	Free	Free	Free	Free
2935.00.05	4.8%	3.2%	1.6%	Free	Free	Free	Free	Free	Free	Free
2935.00.10	4.8%	3.2%	1.6%	Free	Free	Free	Free	Free	Free	Free
2935.00.15	4.8%	3.2%	1.6%	Free	Free	Free	Free	Free	Free	Free
2935.00.20	6.6%	4.4%	2.2%	Free	Free	Free	Free	Free	Free	Free
2935.00.32	6.1%	4.1%	2%	Free	Free	Free	Free	Free	Free	Free
2935.00.48	6.1%	4.1%	2%	Free	Free	Free	Free	Free	Free	Free
2935.00.60	4.8%	3.2%	1.6%	Free	Free	Free	Free	Free	Free	Free
2935.00.75	6.9%	4.6%	2.3%	Free	Free	Free	Free	Free	Free	Free
2935.00.95	1.2¢/kg + 8.8%	0.9¢/kg + 6.6%	0.6¢/kg + 4.4%	0.3¢/kg + 2.2%	Free	Free	Free	Free	Free	Free
2938.10.00	0.7%	Free	Free	Free	Free	Free	Free	Free	Free	Free
2938.90.00	1.8%	Free	Free	Free	Free	Free	Free	Free	Free	Free
2940.00.60	4.3%	2.9%	1.4%	Free	Free	Free	Free	Free	Free	Free
2941.20.10	1.7%	Free	Free	Free	Free	Free	Free	Free	Free	Free
2942.00.05	4.8%	3.2%	1.6%	Free	Free	Free	Free	Free	Free	Free
2942.00.10	6.9%	4.6%	2.3%	Free	Free	Free	Free	Free	Free	Free
2942.00.35	8.2%	6.1%	4.1%	2%	Free	Free	Free	Free	Free	Free
2942.00.50	1.8%	Free	Free	Free	Free	Free	Free	Free	Free	Free

Annex II (continued)
-66-

HTS Subheading	December 17, 2001	2002	2003	2004	2005	2006	2007	2008	2009	2010
3201.90.10	0.7%	Free	Free	Free	Free	Free	Free	Free	Free	Free
3201.90.50	1.5%	Free	Free	Free	Free	Free	Free	Free	Free	Free
3202.10.10	7.2%	4.8%	2.4%	Free	Free	Free	Free	Free	Free	Free
3202.10.50	4.8%	3.2%	1.6%	Free	Free	Free	Free	Free	Free	Free
3202.90.50	2.5%	Free	Free	Free	Free	Free	Free	Free	Free	Free
3203.00.80	1.5%	Free	Free	Free	Free	Free	Free	Free	Free	Free
3204.11.10	4.8%	3.2%	1.6%	Free	Free	Free	Free	Free	Free	Free
3204.11.15	7.2%	4.8%	2.4%	Free	Free	Free	Free	Free	Free	Free
3204.11.35	7.4%	4.9%	2.4%	Free	Free	Free	Free	Free	Free	Free
3204.11.50	9.5%	7.1%	4.7%	2.3%	Free	Free	Free	Free	Free	Free
3204.12.17	7.2%	4.8%	2.4%	Free	Free	Free	Free	Free	Free	Free
3204.12.20	4.8%	3.2%	1.6%	Free	Free	Free	Free	Free	Free	Free
3204.12.30	4.8%	3.2%	1.6%	Free	Free	Free	Free	Free	Free	Free
3204.12.45	7.4%	4.9%	2.4%	Free	Free	Free	Free	Free	Free	Free
3204.12.50	9.5%	7.1%	4.7%	2.3%	Free	Free	Free	Free	Free	Free
3204.13.10	4.8%	3.2%	1.6%	Free	Free	Free	Free	Free	Free	Free
3204.13.20	7.2%	4.8%	2.4%	Free	Free	Free	Free	Free	Free	Free
3204.13.25	9.5%	7.1%	4.7%	2.3%	Free	Free	Free	Free	Free	Free
3204.13.60	7.4%	4.9%	2.4%	Free	Free	Free	Free	Free	Free	Free
3204.13.80	9.5%	7.1%	4.7%	2.3%	Free	Free	Free	Free	Free	Free
3204.14.10	7.2%	4.8%	2.4%	Free	Free	Free	Free	Free	Free	Free
3204.14.20	4.8%	3.2%	1.6%	Free	Free	Free	Free	Free	Free	Free
3204.14.25	9.5%	7.1%	4.7%	2.3%	Free	Free	Free	Free	Free	Free
3204.14.30	7.4%	4.9%	2.4%	Free	Free	Free	Free	Free	Free	Free
3204.14.50	9.5%	7.1%	4.7%	2.3%	Free	Free	Free	Free	Free	Free
3204.15.10	0.9¢/kg + 7.2%	0.6¢/kg + 4.8%	0.3¢/kg + 2.4%	Free	Free	Free	Free	Free	Free	Free
3204.15.20	9.5%	7.1%	4.7%	2.3%	Free	Free	Free	Free	Free	Free
3204.15.30	4.8%	3.2%	1.6%	Free	Free	Free	Free	Free	Free	Free
3204.15.35	7.2%	4.8%	2.4%	Free	Free	Free	Free	Free	Free	Free
3204.15.40	7.4%	4.9%	2.4%	Free	Free	Free	Free	Free	Free	Free
3204.15.80	9.5%	7.1%	4.7%	2.3%	Free	Free	Free	Free	Free	Free

Annex II (continued)
-67-

HTS Subheading	December 17, 2001	2002	2003	2004	2005	2006	2007	2008	2009	2010
3204.16.10	7.2%	4.8%	2.4%	Free	Free	Free	Free	Free	Free	Free
3204.16.20	4.8%	3.2%	1.6%	Free	Free	Free	Free	Free	Free	Free
3204.16.30	7.4%	4.9%	2.4%	Free	Free	Free	Free	Free	Free	Free
3204.16.50	9.5%	7.1%	4.7%	2.3%	Free	Free	Free	Free	Free	Free
3204.17.04	4.8%	3.2%	1.6%	Free	Free	Free	Free	Free	Free	Free
3204.17.20	8.7%	6.5%	4.3%	2.1%	Free	Free	Free	Free	Free	Free
3204.17.60	7.4%	4.9%	2.4%	Free	Free	Free	Free	Free	Free	Free
3204.17.90	9.5%	7.1%	4.7%	2.3%	Free	Free	Free	Free	Free	Free
3204.19.11	4.8%	3.2%	1.6%	Free	Free	Free	Free	Free	Free	Free
3204.19.20	7.4%	4.9%	2.4%	Free	Free	Free	Free	Free	Free	Free
3204.19.25	9.5%	7.1%	4.7%	2.3%	Free	Free	Free	Free	Free	Free
3204.19.30	1¢/kg + 7.6%	0.7¢/kg + 5.7%	0.5¢/kg + 3.8%	0.2¢/kg + 1.9%	Free	Free	Free	Free	Free	Free
3204.19.35	1.5%	Free	Free	Free	Free	Free	Free	Free	Free	Free
3204.19.40	7.4%	4.9%	2.4%	Free	Free	Free	Free	Free	Free	Free
3204.19.50	9.5%	7.1%	4.7%	2.3%	Free	Free	Free	Free	Free	Free
3204.20.10	9.5%	7.1%	4.7%	2.3%	Free	Free	Free	Free	Free	Free
3204.20.80	4.8%	3.2%	1.6%	Free	Free	Free	Free	Free	Free	Free
3204.90.00	4.4%	2.9%	1.4%	Free	Free	Free	Free	Free	Free	Free
3205.00.15	7.4%	4.9%	2.4%	Free	Free	Free	Free	Free	Free	Free
3205.00.40	7.4%	4.9%	2.4%	Free	Free	Free	Free	Free	Free	Free
3205.00.50	9.5%	7.1%	4.7%	2.3%	Free	Free	Free	Free	Free	Free
3206.11.00	4.5%	3%	1.5%	Free	Free	Free	Free	Free	Free	Free
3206.19.00	4.5%	3%	1.5%	Free	Free	Free	Free	Free	Free	Free
3206.20.00	1.8%	Free	Free	Free	Free	Free	Free	Free	Free	Free
3206.30.00	1.5%	Free	Free	Free	Free	Free	Free	Free	Free	Free
3206.41.00	0.7%	Free	Free	Free	Free	Free	Free	Free	Free	Free
3206.42.00	1.1%	Free	Free	Free	Free	Free	Free	Free	Free	Free
3206.43.00	1.8%	Free	Free	Free	Free	Free	Free	Free	Free	Free
3206.49.10	4.4%	2.9%	1.4%	Free	Free	Free	Free	Free	Free	Free
3206.49.20	4.8%	3.2%	1.6%	Free	Free	Free	Free	Free	Free	Free
3206.49.30	0.6%	Free	Free	Free	Free	Free	Free	Free	Free	Free

Annex II (continued)
-68-

HTS Subheading	December 17, 2001	2002	2003	2004	2005	2006	2007	2008	2009	2010
3206.49.50	1.5%	Free	Free	Free	Free	Free	Free	Free	Free	Free
3206.50.00	4.8%	3.2%	1.6%	Free	Free	Free	Free	Free	Free	Free
3207.10.00	1.5%	Free	Free	Free	Free	Free	Free	Free	Free	Free
3207.20.00	2.4%	Free	Free	Free	Free	Free	Free	Free	Free	Free
3207.30.00	1.5%	Free	Free	Free	Free	Free	Free	Free	Free	Free
3207.40.10	4.5%	3%	1.5%	Free	Free	Free	Free	Free	Free	Free
3207.40.50	6.9%	4.6%	2.3%	Free	Free	Free	Free	Free	Free	Free
3208.10.00	1.8%	Free	Free	Free	Free	Free	Free	Free	Free	Free
3208.20.00	1.8%	Free	Free	Free	Free	Free	Free	Free	Free	Free
3208.90.00	1.6%	Free	Free	Free	Free	Free	Free	Free	Free	Free
3209.10.00	2.5%	Free	Free	Free	Free	Free	Free	Free	Free	Free
3209.90.00	2.9%	Free	Free	Free	Free	Free	Free	Free	Free	Free
3210.00.00	0.9%	Free	Free	Free	Free	Free	Free	Free	Free	Free
3211.00.00	1.8%	Free	Free	Free	Free	Free	Free	Free	Free	Free
3212.10.00	2.3%	Free	Free	Free	Free	Free	Free	Free	Free	Free
3212.90.00	1.5%	Free	Free	Free	Free	Free	Free	Free	Free	Free
3213.10.00	4.8%	3.2%	1.6%	Free	Free	Free	Free	Free	Free	Free
3213.90.00	1.7%	Free	Free	Free	Free	Free	Free	Free	Free	Free
3214.10.00	1.8%	Free	Free	Free	Free	Free	Free	Free	Free	Free
3214.90.50	6.2%	4.1%	2%	Free	Free	Free	Free	Free	Free	Free
3215.11.00	0.9%	Free	Free	Free	Free	Free	Free	Free	Free	Free
3215.19.00	0.9%	Free	Free	Free	Free	Free	Free	Free	Free	Free
3215.90.10	1.5%	Free	Free	Free	Free	Free	Free	Free	Free	Free
3215.90.50	0.9%	Free	Free	Free	Free	Free	Free	Free	Free	Free
3301.12.00	1.3%	Free	Free	Free	Free	Free	Free	Free	Free	Free
3301.13.00	1.9%	Free	Free	Free	Free	Free	Free	Free	Free	Free
3301.19.10	1.3%	Free	Free	Free	Free	Free	Free	Free	Free	Free
3301.24.00	2.1%	Free	Free	Free	Free	Free	Free	Free	Free	Free
3301.29.10	0.9%	Free	Free	Free	Free	Free	Free	Free	Free	Free
3301.29.20	0.5%	Free	Free	Free	Free	Free	Free	Free	Free	Free
3301.90.10	1.9%	Free	Free	Free	Free	Free	Free	Free	Free	Free

Annex II (continued)
-69-

HTS Subheading	December 17, 2001	2002	2003	2004	2005	2006	2007	2008	2009	2010
3302.10.40	4.2¢/kg + 0.9%	Free	Free	Free	Free	Free	Free	Free	Free	Free
3302.10.50	8.5¢/kg + 0.9%	Free	Free	Free	Free	Free	Free	Free	Free	Free
3307.10.10	2.4%	Free	Free	Free	Free	Free	Free	Free	Free	Free
3307.10.20	2.4%	Free	Free	Free	Free	Free	Free	Free	Free	Free
3307.20.00	2.4%	Free	Free	Free	Free	Free	Free	Free	Free	Free
3307.30.50	2.4%	Free	Free	Free	Free	Free	Free	Free	Free	Free
3307.41.00	1.2%	Free	Free	Free	Free	Free	Free	Free	Free	Free
3307.49.00	3%	Free	Free	Free	Free	Free	Free	Free	Free	Free
3307.90.00	2.7%	Free	Free	Free	Free	Free	Free	Free	Free	Free
3402.11.20	3.2%	Free	Free	Free	Free	Free	Free	Free	Free	Free
3402.11.40	2%	Free	Free	Free	Free	Free	Free	Free	Free	Free
3402.11.50	1.8%	Free	Free	Free	Free	Free	Free	Free	Free	Free
3402.12.10	2%	Free	Free	Free	Free	Free	Free	Free	Free	Free
3402.12.50	2%	Free	Free	Free	Free	Free	Free	Free	Free	Free
3402.13.10	2%	Free	Free	Free	Free	Free	Free	Free	Free	Free
3402.13.20	2%	Free	Free	Free	Free	Free	Free	Free	Free	Free
3402.13.50	1.8%	Free	Free	Free	Free	Free	Free	Free	Free	Free
3402.19.10	2%	Free	Free	Free	Free	Free	Free	Free	Free	Free
3402.19.50	1.8%	Free	Free	Free	Free	Free	Free	Free	Free	Free
3402.20.10	2%	Free	Free	Free	Free	Free	Free	Free	Free	Free
3402.90.10	1.9%	Free	Free	Free	Free	Free	Free	Free	Free	Free
3402.90.30	2%	Free	Free	Free	Free	Free	Free	Free	Free	Free
3402.90.50	1.8%	Free	Free	Free	Free	Free	Free	Free	Free	Free
3403.11.20	0.1%	Free	Free	Free	Free	Free	Free	Free	Free	Free
3403.11.40	4.5%	3%	1.5%	Free	Free	Free	Free	Free	Free	Free
3403.11.50	0.7%	Free	Free	Free	Free	Free	Free	Free	Free	Free
3403.19.10	0.1%	Free	Free	Free	Free	Free	Free	Free	Free	Free
3403.19.50	4.3%	2.9%	1.4%	Free	Free	Free	Free	Free	Free	Free
3403.91.10	4.5%	3%	1.5%	Free	Free	Free	Free	Free	Free	Free
3403.91.50	4.8%	3.2%	1.6%	Free	Free	Free	Free	Free	Free	Free
3403.99.00	4.8%	3.2%	1.6%	Free	Free	Free	Free	Free	Free	Free

Annex II (continued)
-70-

HTS Subheading	December 17, 2001	2002	2003	2004	2005	2006	2007	2008	2009	2010
3404.20.00	5.5%	3.7%	1.8%	Free	Free	Free	Free	Free	Free	Free
3501.10.10	0.1¢/kg	Free	Free	Free	Free	Free	Free	Free	Free	Free
3501.90.20	4.5%	3%	1.5%	Free	Free	Free	Free	Free	Free	Free
3501.90.60	0.1¢/kg	Free	Free	Free	Free	Free	Free	Free	Free	Free
3502.11.00	35.7¢/kg	23.8¢/kg	11.9¢/kg	Free	Free	Free	Free	Free	Free	Free
3502.19.00	7.7¢/kg	5.8¢/kg	3.8¢/kg	1.9¢/kg	Free	Free	Free	Free	Free	Free
3503.00.10	0.6¢/kg + 0.7%	Free	Free	Free	Free	Free	Free	Free	Free	Free
3503.00.20	0.6¢/kg + 1.6%	Free	Free	Free	Free	Free	Free	Free	Free	Free
3503.00.40	1.4¢/kg + 1.9%	Free	Free	Free	Free	Free	Free	Free	Free	Free
3503.00.55	1.4¢/kg + 1.9%	Free	Free	Free	Free	Free	Free	Free	Free	Free
3504.00.10	2.5%	Free	Free	Free	Free	Free	Free	Free	Free	Free
3504.00.50	2%	Free	Free	Free	Free	Free	Free	Free	Free	Free
3505.10.00	0.3¢/kg	Free	Free	Free	Free	Free	Free	Free	Free	Free
3505.20.00	1¢/kg + 1.4%	Free	Free	Free	Free	Free	Free	Free	Free	Free
3506.10.10	4.8%	3.2%	1.6%	Free	Free	Free	Free	Free	Free	Free
3506.10.50	1%	Free	Free	Free	Free	Free	Free	Free	Free	Free
3506.91.00	1%	Free	Free	Free	Free	Free	Free	Free	Free	Free
3506.99.00	1%	Free	Free	Free	Free	Free	Free	Free	Free	Free
3601.00.00	4.8%	3.2%	1.6%	Free	Free	Free	Free	Free	Free	Free
3603.00.30	1.5%	Free	Free	Free	Free	Free	Free	Free	Free	Free
3603.00.60	2.1%	Free	Free	Free	Free	Free	Free	Free	Free	Free
3603.00.90	0.1%	Free	Free	Free	Free	Free	Free	Free	Free	Free
3604.10.10	1.2%	Free	Free	Free	Free	Free	Free	Free	Free	Free
3604.10.90	3.9%	2.6%	1.3%	Free	Free	Free	Free	Free	Free	Free
3604.90.00	4.8%	3.2%	1.6%	Free	Free	Free	Free	Free	Free	Free
3606.90.30	4.4%	2.9%	1.4%	Free	Free	Free	Free	Free	Free	Free
3606.90.80	2.5%	Free	Free	Free	Free	Free	Free	Free	Free	Free
3701.10.00	1.8%	Free	Free	Free	Free	Free	Free	Free	Free	Free
3701.20.00	1.8%	Free	Free	Free	Free	Free	Free	Free	Free	Free
3701.30.00	1.8%	Free	Free	Free	Free	Free	Free	Free	Free	Free
3701.91.00	1.8%	Free	Free	Free	Free	Free	Free	Free	Free	Free

Annex II (continued)
-71-

HTS Subheading	December 17, 2001	2002	2003	2004	2005	2006	2007	2008	2009	2010
3701.99.30	2.4%	Free	Free	Free	Free	Free	Free	Free	Free	Free
3701.99.60	1.8%	Free	Free	Free	Free	Free	Free	Free	Free	Free
3702.10.00	1.8%	Free	Free	Free	Free	Free	Free	Free	Free	Free
3702.20.00	1.8%	Free	Free	Free	Free	Free	Free	Free	Free	Free
3702.31.00	1.8%	Free	Free	Free	Free	Free	Free	Free	Free	Free
3702.32.00	1.8%	Free	Free	Free	Free	Free	Free	Free	Free	Free
3702.39.00	1.8%	Free	Free	Free	Free	Free	Free	Free	Free	Free
3702.41.00	1.8%	Free	Free	Free	Free	Free	Free	Free	Free	Free
3702.42.00	1.8%	Free	Free	Free	Free	Free	Free	Free	Free	Free
3702.43.00	1.8%	Free	Free	Free	Free	Free	Free	Free	Free	Free
3702.44.00	1.8%	Free	Free	Free	Free	Free	Free	Free	Free	Free
3702.51.00	1.8%	Free	Free	Free	Free	Free	Free	Free	Free	Free
3702.52.00	1.8%	Free	Free	Free	Free	Free	Free	Free	Free	Free
3702.53.00	1.8%	Free	Free	Free	Free	Free	Free	Free	Free	Free
3702.54.00	1.8%	Free	Free	Free	Free	Free	Free	Free	Free	Free
3702.91.00	1.8%	Free	Free	Free	Free	Free	Free	Free	Free	Free
3702.92.00	1.8%	Free	Free	Free	Free	Free	Free	Free	Free	Free
3702.93.00	1.8%	Free	Free	Free	Free	Free	Free	Free	Free	Free
3702.95.00	1.8%	Free	Free	Free	Free	Free	Free	Free	Free	Free
3703.10.30	1.8%	Free	Free	Free	Free	Free	Free	Free	Free	Free
3703.10.60	1.5%	Free	Free	Free	Free	Free	Free	Free	Free	Free
3703.20.30	1.8%	Free	Free	Free	Free	Free	Free	Free	Free	Free
3703.20.60	1.5%	Free	Free	Free	Free	Free	Free	Free	Free	Free
3703.90.30	1.8%	Free	Free	Free	Free	Free	Free	Free	Free	Free
3703.90.60	1.4%	Free	Free	Free	Free	Free	Free	Free	Free	Free
3706.10.30	0.7%	Free	Free	Free	Free	Free	Free	Free	Free	Free
3707.10.00	1.5%	Free	Free	Free	Free	Free	Free	Free	Free	Free
3707.90.32	3.2%	Free	Free	Free	Free	Free	Free	Free	Free	Free
3707.90.60	0.7%	Free	Free	Free	Free	Free	Free	Free	Free	Free
3801.10.10	1.8%	Free	Free	Free	Free	Free	Free	Free	Free	Free
3801.30.00	2.4%	Free	Free	Free	Free	Free	Free	Free	Free	Free

Annex II (continued)
-72-

HTS Subheading	December 17, 2001	2002	2003	2004	2005	2006	2007	2008	2009	2010
3801.90.00	2.4%	Free	Free	Free	Free	Free	Free	Free	Free	Free
3802.10.00	2.4%	Free	Free	Free	Free	Free	Free	Free	Free	Free
3802.90.10	4.3%	2.9%	1.4%	Free	Free	Free	Free	Free	Free	Free
3802.90.20	1.2%	Free	Free	Free	Free	Free	Free	Free	Free	Free
3802.90.50	2.4%	Free	Free	Free	Free	Free	Free	Free	Free	Free
3804.00.50	1.8%	Free	Free	Free	Free	Free	Free	Free	Free	Free
3805.10.00	2.5%	Free	Free	Free	Free	Free	Free	Free	Free	Free
3805.90.00	1.8%	Free	Free	Free	Free	Free	Free	Free	Free	Free
3806.10.00	2.5%	Free	Free	Free	Free	Free	Free	Free	Free	Free
3806.20.00	1.8%	Free	Free	Free	Free	Free	Free	Free	Free	Free
3806.30.00	4.8%	3.2%	1.6%	Free	Free	Free	Free	Free	Free	Free
3806.90.00	2.1%	Free	Free	Free	Free	Free	Free	Free	Free	Free
3807.00.00	Free	Free	Free	Free	Free	Free	Free	Free	Free	Free
3808.10.10	1.4%	Free	Free	Free	Free	Free	Free	Free	Free	Free
3808.10.25	3.2%	Free	Free	Free	Free	Free	Free	Free	Free	Free
3808.10.30	2.5%	Free	Free	Free	Free	Free	Free	Free	Free	Free
3808.10.50	2.5%	Free	Free	Free	Free	Free	Free	Free	Free	Free
3808.20.15	3.2%	Free	Free	Free	Free	Free	Free	Free	Free	Free
3808.20.28	1.8%	Free	Free	Free	Free	Free	Free	Free	Free	Free
3808.20.30	2.5%	Free	Free	Free	Free	Free	Free	Free	Free	Free
3808.20.50	2.5%	Free	Free	Free	Free	Free	Free	Free	Free	Free
3808.30.15	3.2%	Free	Free	Free	Free	Free	Free	Free	Free	Free
3808.30.20	2.5%	Free	Free	Free	Free	Free	Free	Free	Free	Free
3808.30.50	2.5%	Free	Free	Free	Free	Free	Free	Free	Free	Free
3808.40.10	3.2%	Free	Free	Free	Free	Free	Free	Free	Free	Free
3808.40.50	2.5%	Free	Free	Free	Free	Free	Free	Free	Free	Free
3808.90.08	3.2%	Free	Free	Free	Free	Free	Free	Free	Free	Free
3808.90.70	2.5%	Free	Free	Free	Free	Free	Free	Free	Free	Free
3808.90.95	2.5%	Free	Free	Free	Free	Free	Free	Free	Free	Free
3809.10.00	1.6¢/kg + 2.2%	1.1¢/kg + 1.5%	0.5¢/kg + 0.7%	Free	Free	Free	Free	Free	Free	Free
3809.91.00	4.5%	3%	1.5%	Free	Free	Free	Free	Free	Free	Free

Annex II (continued)
-73-

HTS Subheading	December 17, 2001	2002	2003	2004	2005	2006	2007	2008	2009	2010
3809.92.10	6.5%	4.3%	2.1%	Free	Free	Free	Free	Free	Free	Free
3809.92.50	4.5%	3%	1.5%	Free	Free	Free	Free	Free	Free	Free
3809.93.10	6.5%	4.3%	2.1%	Free	Free	Free	Free	Free	Free	Free
3809.93.50	4.5%	3%	1.5%	Free	Free	Free	Free	Free	Free	Free
3810.10.00	2.5%	Free	Free	Free	Free	Free	Free	Free	Free	Free
3810.90.10	1.1¢/kg + 6.9%	0.7¢/kg + 4.6%	0.3¢/kg + 2.3%	Free	Free	Free	Free	Free	Free	Free
3810.90.50	2.5%	Free	Free	Free	Free	Free	Free	Free	Free	Free
3811.19.00	1.2¢/kg + 7.4%	0.9¢/kg + 5.5%	0.6¢/kg + 3.7%	0.3¢/kg + 1.8%	Free	Free	Free	Free	Free	Free
3811.21.00	6.5%	4.3%	2.1%	Free	Free	Free	Free	Free	Free	Free
3811.29.00	4.8%	3.2%	1.6%	Free	Free	Free	Free	Free	Free	Free
3811.90.00	1.1¢/kg + 6.9%	0.7¢/kg + 4.6%	0.3¢/kg + 2.3%	Free	Free	Free	Free	Free	Free	Free
3812.10.10	1.1¢/kg + 6.9%	0.7¢/kg + 4.6%	0.3¢/kg + 2.3%	Free	Free	Free	Free	Free	Free	Free
3812.10.50	2.5%	Free	Free	Free	Free	Free	Free	Free	Free	Free
3812.20.10	8.8%	6.6%	4.4%	2.2%	Free	Free	Free	Free	Free	Free
3812.20.50	2.5%	Free	Free	Free	Free	Free	Free	Free	Free	Free
3812.30.20	1.1¢/kg + 6.9%	0.7¢/kg + 4.6%	0.3¢/kg + 2.3%	Free	Free	Free	Free	Free	Free	Free
3812.30.60	1.1¢/kg + 6.9%	0.7¢/kg + 4.6%	0.3¢/kg + 2.3%	Free	Free	Free	Free	Free	Free	Free
3812.30.90	2.5%	Free	Free	Free	Free	Free	Free	Free	Free	Free
3813.00.50	1.8%	Free	Free	Free	Free	Free	Free	Free	Free	Free
3814.00.10	1.1¢/kg + 6.9%	0.7¢/kg + 4.6%	0.3¢/kg + 2.3%	Free	Free	Free	Free	Free	Free	Free
3814.00.20	4.8%	3.2%	1.6%	Free	Free	Free	Free	Free	Free	Free
3814.00.50	4.5%	3%	1.5%	Free	Free	Free	Free	Free	Free	Free
3815.90.10	4.8%	3.2%	1.6%	Free	Free	Free	Free	Free	Free	Free
3815.90.20	1.4%	Free	Free	Free	Free	Free	Free	Free	Free	Free
3815.90.50	2.5%	Free	Free	Free	Free	Free	Free	Free	Free	Free
3816.00.00	1.5%	Free	Free	Free	Free	Free	Free	Free	Free	Free
3817.10.10	0.3¢/kg + 8.6%	0.2¢/kg + 6.4%	0.1¢/kg + 4.3%	2.1%	Free	Free	Free	Free	Free	Free
3817.10.50	0.3¢/kg + 8.6%	0.2¢/kg + 6.4%	0.1¢/kg + 4.3%	2.1%	Free	Free	Free	Free	Free	Free
3817.20.00	1.1¢/kg + 6.9%	0.7¢/kg + 4.6%	0.3¢/kg + 2.3%	Free	Free	Free	Free	Free	Free	Free
3819.00.00	1.1¢/kg + 6.9%	0.7¢/kg + 4.6%	0.3¢/kg + 2.3%	Free	Free	Free	Free	Free	Free	Free
3820.00.00	6.5%	4.3%	2.1%	Free	Free	Free	Free	Free	Free	Free

Annex II (continued)
-74-

HTS Subheading	December 17, 2001	2002	2003	2004	2005	2006	2007	2008	2009	2010
3821.00.00	2.5%	Free	Free	Free	Free	Free	Free	Free	Free	Free
3823.11.00	1¢/kg + 1.9%	Free	Free	Free	Free	Free	Free	Free	Free	Free
3823.12.00	1¢/kg + 1.6%	Free	Free	Free	Free	Free	Free	Free	Free	Free
3823.13.00	1.6%	Free	Free	Free	Free	Free	Free	Free	Free	Free
3823.19.20	1.1%	Free	Free	Free	Free	Free	Free	Free	Free	Free
3823.19.40	1.6%	Free	Free	Free	Free	Free	Free	Free	Free	Free
3823.70.20	2.5%	Free	Free	Free	Free	Free	Free	Free	Free	Free
3823.70.40	1%	Free	Free	Free	Free	Free	Free	Free	Free	Free
3823.70.60	1.2%	Free	Free	Free	Free	Free	Free	Free	Free	Free
3824.10.00	4.5%	3%	1.5%	Free	Free	Free	Free	Free	Free	Free
3824.20.00	1.8%	Free	Free	Free	Free	Free	Free	Free	Free	Free
3824.30.00	1.8%	Free	Free	Free	Free	Free	Free	Free	Free	Free
3824.40.10	1.2¢/kg + 7.4%	0.9¢/kg + 5.5%	0.6¢/kg + 3.7%	0.3¢/kg + 1.8%	Free	Free	Free	Free	Free	Free
3824.40.50	2.5%	Free	Free	Free	Free	Free	Free	Free	Free	Free
3824.60.00	2.4%	Free	Free	Free	Free	Free	Free	Free	Free	Free
3824.71.00	1.8%	Free	Free	Free	Free	Free	Free	Free	Free	Free
3824.79.00	1.8%	Free	Free	Free	Free	Free	Free	Free	Free	Free
3824.90.19	4.8%	3.2%	1.6%	Free	Free	Free	Free	Free	Free	Free
3824.90.22	1.2¢/kg + 8.3%	0.9¢/kg + 6.2%	0.6¢/kg + 4.1%	0.3¢/kg + 2%	Free	Free	Free	Free	Free	Free
3824.90.25	1.2¢/kg + 7.4%	0.9¢/kg + 5.5%	0.6¢/kg + 3.7%	0.3¢/kg + 1.8%	Free	Free	Free	Free	Free	Free
3824.90.28	1.1¢/kg + 6.9%	0.7¢/kg + 4.6%	0.3¢/kg + 2.3%	Free	Free	Free	Free	Free	Free	Free
3824.90.31	4.8%	3.2%	1.6%	Free	Free	Free	Free	Free	Free	Free
3824.90.32	8.7%	6.5%	4.3%	2.1%	Free	Free	Free	Free	Free	Free
3824.90.33	2.1%	Free	Free	Free	Free	Free	Free	Free	Free	Free
3824.90.34	1.4%	Free	Free	Free	Free	Free	Free	Free	Free	Free
3824.90.35	4.8%	3.2%	1.6%	Free	Free	Free	Free	Free	Free	Free
3824.90.36	4.8%	3.2%	1.6%	Free	Free	Free	Free	Free	Free	Free
3824.90.40	2.3%	Free	Free	Free	Free	Free	Free	Free	Free	Free
3824.90.45	4.8%	3.2%	1.6%	Free	Free	Free	Free	Free	Free	Free
3824.90.46	8.8%	6.6%	4.4%	2.2%	Free	Free	Free	Free	Free	Free
3824.90.47	1.8%	Free	Free	Free	Free	Free	Free	Free	Free	Free

Annex II (continued)
-75-

HTS Subheading	December 17, 2001	2002	2003	2004	2005	2006	2007	2008	2009	2010
3824.90.90	2.5%	Free	Free	Free	Free	Free	Free	Free	Free	Free
3901.10.00	6.6%	4.4%	2.2%	Free	Free	Free	Free	Free	Free	Free
3901.20.00	6.6%	4.4%	2.2%	Free	Free	Free	Free	Free	Free	Free
3901.30.60	3.9%	2.6%	1.3%	Free	Free	Free	Free	Free	Free	Free
3901.90.55	6.6%	4.4%	2.2%	Free	Free	Free	Free	Free	Free	Free
3901.90.90	4.8%	3.2%	1.6%	Free	Free	Free	Free	Free	Free	Free
3902.10.00	6.6%	4.4%	2.2%	Free	Free	Free	Free	Free	Free	Free
3902.20.50	4.8%	3.2%	1.6%	Free	Free	Free	Free	Free	Free	Free
3902.30.00	4.8%	3.2%	1.6%	Free	Free	Free	Free	Free	Free	Free
3902.90.00	4.8%	3.2%	1.6%	Free	Free	Free	Free	Free	Free	Free
3903.11.00	4.8%	3.2%	1.6%	Free	Free	Free	Free	Free	Free	Free
3903.19.00	4.8%	3.2%	1.6%	Free	Free	Free	Free	Free	Free	Free
3903.20.00	4.8%	3.2%	1.6%	Free	Free	Free	Free	Free	Free	Free
3903.30.00	4.8%	3.2%	1.6%	Free	Free	Free	Free	Free	Free	Free
3903.90.10	4.8%	3.2%	1.6%	Free	Free	Free	Free	Free	Free	Free
3903.90.50	4.8%	3.2%	1.6%	Free	Free	Free	Free	Free	Free	Free
3904.10.00	5.9%	3.9%	1.9%	Free	Free	Free	Free	Free	Free	Free
3904.21.00	5.9%	3.9%	1.9%	Free	Free	Free	Free	Free	Free	Free
3904.22.00	5.9%	3.9%	1.9%	Free	Free	Free	Free	Free	Free	Free
3904.30.60	3.9%	2.6%	1.3%	Free	Free	Free	Free	Free	Free	Free
3904.40.00	3.9%	2.6%	1.3%	Free	Free	Free	Free	Free	Free	Free
3904.50.00	4.8%	3.2%	1.6%	Free	Free	Free	Free	Free	Free	Free
3904.61.00	4.3%	2.9%	1.4%	Free	Free	Free	Free	Free	Free	Free
3904.69.50	4.8%	3.2%	1.6%	Free	Free	Free	Free	Free	Free	Free
3904.90.50	4.8%	3.2%	1.6%	Free	Free	Free	Free	Free	Free	Free
3905.12.00	2%	Free	Free	Free	Free	Free	Free	Free	Free	Free
3905.19.00	2%	Free	Free	Free	Free	Free	Free	Free	Free	Free
3905.21.00	2%	Free	Free	Free	Free	Free	Free	Free	Free	Free
3905.29.00	2%	Free	Free	Free	Free	Free	Free	Free	Free	Free
3905.30.00	1.6%	Free	Free	Free	Free	Free	Free	Free	Free	Free
3905.91.10	2%	Free	Free	Free	Free	Free	Free	Free	Free	Free

Annex II (continued)
-76-

HTS Subheading	December 17, 2001	2002	2003	2004	2005	2006	2007	2008	2009	2010
3905.91.50	3.9%	2.6%	1.3%	Free	Free	Free	Free	Free	Free	Free
3905.99.80	3.9%	2.6%	1.3%	Free	Free	Free	Free	Free	Free	Free
3906.10.00	4.7%	3.1%	1.5%	Free	Free	Free	Free	Free	Free	Free
3906.90.20	4.7%	3.1%	1.5%	Free	Free	Free	Free	Free	Free	Free
3906.90.50	2.1%	Free	Free	Free	Free	Free	Free	Free	Free	Free
3907.10.00	4.8%	3.2%	1.6%	Free	Free	Free	Free	Free	Free	Free
3907.20.00	4.8%	3.2%	1.6%	Free	Free	Free	Free	Free	Free	Free
3907.30.00	4.5%	3%	1.5%	Free	Free	Free	Free	Free	Free	Free
3907.40.00	4.3%	2.9%	1.4%	Free	Free	Free	Free	Free	Free	Free
3907.50.00	0.6¢/kg + 3.7%	Free	Free	Free	Free	Free	Free	Free	Free	Free
3907.60.00	0.9¢/kg + 5.6%	0.6¢/kg + 3.7%	0.3¢/kg + 1.8%	Free	Free	Free	Free	Free	Free	Free
3907.91.40	4.3%	2.9%	1.4%	Free	Free	Free	Free	Free	Free	Free
3907.91.50	4.8%	3.2%	1.6%	Free	Free	Free	Free	Free	Free	Free
3907.99.00	0.9¢/kg + 5.6%	0.6¢/kg + 3.7%	0.3¢/kg + 1.8%	Free	Free	Free	Free	Free	Free	Free
3908.10.00	4.7%	3.1%	1.5%	Free	Free	Free	Free	Free	Free	Free
3908.90.70	4.8%	3.2%	1.6%	Free	Free	Free	Free	Free	Free	Free
3909.10.00	4.8%	3.2%	1.6%	Free	Free	Free	Free	Free	Free	Free
3909.20.00	4.8%	3.2%	1.6%	Free	Free	Free	Free	Free	Free	Free
3909.30.00	4.8%	3.2%	1.6%	Free	Free	Free	Free	Free	Free	Free
3909.40.00	4.8%	3.2%	1.6%	Free	Free	Free	Free	Free	Free	Free
3909.50.20	1%	Free	Free	Free	Free	Free	Free	Free	Free	Free
3909.50.50	4.7%	3.1%	1.5%	Free	Free	Free	Free	Free	Free	Free
3910.00.00	1.5%	Free	Free	Free	Free	Free	Free	Free	Free	Free
3911.10.00	4.5%	3%	1.5%	Free	Free	Free	Free	Free	Free	Free
3911.90.25	3%	Free	Free	Free	Free	Free	Free	Free	Free	Free
3911.90.45	2.9%	Free	Free	Free	Free	Free	Free	Free	Free	Free
3911.90.90	3.2%	Free	Free	Free	Free	Free	Free	Free	Free	Free
3912.11.00	4.2%	2.8%	1.4%	Free	Free	Free	Free	Free	Free	Free
3912.12.00	4.2%	2.8%	1.4%	Free	Free	Free	Free	Free	Free	Free
3912.20.00	3.9%	2.6%	1.3%	Free	Free	Free	Free	Free	Free	Free
3912.31.00	4.8%	3.2%	1.6%	Free	Free	Free	Free	Free	Free	Free

Annex II (continued)
-77-

HTS Subheading	December 17, 2001	2002	2003	2004	2005	2006	2007	2008	2009	2010
3912.39.00	2.1%	Free	Free	Free	Free	Free	Free	Free	Free	Free
3912.90.00	3.9%	2.6%	1.3%	Free	Free	Free	Free	Free	Free	Free
3913.10.00	2.1%	Free	Free	Free	Free	Free	Free	Free	Free	Free
3913.90.20	4.3%	2.9%	1.4%	Free	Free	Free	Free	Free	Free	Free
3913.90.50	4.8%	3.2%	1.6%	Free	Free	Free	Free	Free	Free	Free
3914.00.60	1.9%	Free	Free	Free	Free	Free	Free	Free	Free	Free
3916.10.00	4.3%	2.9%	1.4%	Free	Free	Free	Free	Free	Free	Free
3916.20.00	4.3%	2.9%	1.4%	Free	Free	Free	Free	Free	Free	Free
3916.90.10	4.8%	3.2%	1.6%	Free	Free	Free	Free	Free	Free	Free
3916.90.20	1.5%	Free	Free	Free	Free	Free	Free	Free	Free	Free
3916.90.30	4.8%	3.2%	1.6%	Free	Free	Free	Free	Free	Free	Free
3916.90.50	4.3%	2.9%	1.4%	Free	Free	Free	Free	Free	Free	Free
3917.10.10	4.8%	3.2%	1.6%	Free	Free	Free	Free	Free	Free	Free
3917.10.90	2.1%	Free	Free	Free	Free	Free	Free	Free	Free	Free
3917.21.00	1.5%	Free	Free	Free	Free	Free	Free	Free	Free	Free
3917.22.00	1.5%	Free	Free	Free	Free	Free	Free	Free	Free	Free
3917.23.00	1.5%	Free	Free	Free	Free	Free	Free	Free	Free	Free
3917.29.00	1.5%	Free	Free	Free	Free	Free	Free	Free	Free	Free
3917.31.00	1.5%	Free	Free	Free	Free	Free	Free	Free	Free	Free
3917.32.60	1.5%	Free	Free	Free	Free	Free	Free	Free	Free	Free
3917.33.00	1.5%	Free	Free	Free	Free	Free	Free	Free	Free	Free
3917.39.00	1.5%	Free	Free	Free	Free	Free	Free	Free	Free	Free
3917.40.00	3.9%	2.6%	1.3%	Free	Free	Free	Free	Free	Free	Free
3918.10.10	3.9%	2.6%	1.3%	Free	Free	Free	Free	Free	Free	Free
3918.10.20	3.9%	2.6%	1.3%	Free	Free	Free	Free	Free	Free	Free
3918.10.31	2.1%	Free	Free	Free	Free	Free	Free	Free	Free	Free
3918.10.32	4.8%	3.2%	1.6%	Free	Free	Free	Free	Free	Free	Free
3918.10.40	3.9%	2.6%	1.3%	Free	Free	Free	Free	Free	Free	Free
3918.10.50	2.1%	Free	Free	Free	Free	Free	Free	Free	Free	Free
3918.90.10	3.9%	2.6%	1.3%	Free	Free	Free	Free	Free	Free	Free
3918.90.20	4.8%	3.2%	1.6%	Free	Free	Free	Free	Free	Free	Free

Annex II (continued)
-78-

HTS Subheading	December 17, 2001	2002	2003	2004	2005	2006	2007	2008	2009	2010
3918.90.30	3.9%	2.6%	1.3%	Free	Free	Free	Free	Free	Free	Free
3918.90.50	2.1%	Free	Free	Free	Free	Free	Free	Free	Free	Free
3919.10.10	3.2%	Free	Free	Free	Free	Free	Free	Free	Free	Free
3919.10.20	2.9%	Free	Free	Free	Free	Free	Free	Free	Free	Free
3919.90.10	3.2%	Free	Free	Free	Free	Free	Free	Free	Free	Free
3919.90.50	2.9%	Free	Free	Free	Free	Free	Free	Free	Free	Free
3920.10.00	2.1%	Free	Free	Free	Free	Free	Free	Free	Free	Free
3920.20.00	2.1%	Free	Free	Free	Free	Free	Free	Free	Free	Free
3920.30.00	4.3%	2.9%	1.4%	Free	Free	Free	Free	Free	Free	Free
3920.41.00	4.3%	2.9%	1.4%	Free	Free	Free	Free	Free	Free	Free
3920.42.10	1.5%	Free	Free	Free	Free	Free	Free	Free	Free	Free
3920.42.50	2.1%	Free	Free	Free	Free	Free	Free	Free	Free	Free
3920.51.10	4.5%	3%	1.5%	Free	Free	Free	Free	Free	Free	Free
3920.51.50	4.8%	3.2%	1.6%	Free	Free	Free	Free	Free	Free	Free
3920.59.10	4.5%	3%	1.5%	Free	Free	Free	Free	Free	Free	Free
3920.59.80	4.8%	3.2%	1.6%	Free	Free	Free	Free	Free	Free	Free
3920.61.00	4.3%	2.9%	1.4%	Free	Free	Free	Free	Free	Free	Free
3920.62.00	2.1%	Free	Free	Free	Free	Free	Free	Free	Free	Free
3920.63.10	2.1%	Free	Free	Free	Free	Free	Free	Free	Free	Free
3920.63.20	4.3%	2.9%	1.4%	Free	Free	Free	Free	Free	Free	Free
3920.69.00	2.1%	Free	Free	Free	Free	Free	Free	Free	Free	Free
3920.71.00	4.6%	3.1%	1.5%	Free	Free	Free	Free	Free	Free	Free
3920.72.00	1.5%	Free	Free	Free	Free	Free	Free	Free	Free	Free
3920.73.00	1.4%	Free	Free	Free	Free	Free	Free	Free	Free	Free
3920.79.10	4.6%	3.1%	1.5%	Free	Free	Free	Free	Free	Free	Free
3920.79.50	1.8%	Free	Free	Free	Free	Free	Free	Free	Free	Free
3920.91.00	2.1%	Free	Free	Free	Free	Free	Free	Free	Free	Free
3920.92.00	2.1%	Free	Free	Free	Free	Free	Free	Free	Free	Free
3920.93.00	4.3%	2.9%	1.4%	Free	Free	Free	Free	Free	Free	Free
3920.94.00	4.3%	2.9%	1.4%	Free	Free	Free	Free	Free	Free	Free
3920.99.10	4.5%	3%	1.5%	Free	Free	Free	Free	Free	Free	Free

Annex II (continued)
-79-

HTS Subheading	December 17, 2001	2002	2003	2004	2005	2006	2007	2008	2009	2010
3920.99.20	2.1%	Free	Free	Free	Free	Free	Free	Free	Free	Free
3920.99.50	4.3%	2.9%	1.4%	Free	Free	Free	Free	Free	Free	Free
3921.11.00	3.9%	2.6%	1.3%	Free	Free	Free	Free	Free	Free	Free
3921.12.11	2.1%	Free	Free	Free	Free	Free	Free	Free	Free	Free
3921.12.15	4.8%	3.2%	1.6%	Free	Free	Free	Free	Free	Free	Free
3921.12.19	3.9%	2.6%	1.3%	Free	Free	Free	Free	Free	Free	Free
3921.12.50	4.8%	3.2%	1.6%	Free	Free	Free	Free	Free	Free	Free
3921.13.11	2.1%	Free	Free	Free	Free	Free	Free	Free	Free	Free
3921.13.15	4.8%	3.2%	1.6%	Free	Free	Free	Free	Free	Free	Free
3921.13.19	3.9%	2.6%	1.3%	Free	Free	Free	Free	Free	Free	Free
3921.13.50	2.1%	Free	Free	Free	Free	Free	Free	Free	Free	Free
3921.14.00	4.8%	3.2%	1.6%	Free	Free	Free	Free	Free	Free	Free
3921.19.00	4.8%	3.2%	1.6%	Free	Free	Free	Free	Free	Free	Free
3921.90.11	2.1%	Free	Free	Free	Free	Free	Free	Free	Free	Free
3921.90.15	4.8%	3.2%	1.6%	Free	Free	Free	Free	Free	Free	Free
3921.90.19	3.9%	2.6%	1.3%	Free	Free	Free	Free	Free	Free	Free
3921.90.21	4.8%	3.2%	1.6%	Free	Free	Free	Free	Free	Free	Free
3921.90.25	8.2%	6.1%	4.1%	2%	Free	Free	Free	Free	Free	Free
3921.90.29	2.2%	Free	Free	Free	Free	Free	Free	Free	Free	Free
3921.90.40	2.1%	Free	Free	Free	Free	Free	Free	Free	Free	Free
3921.90.50	2.4%	Free	Free	Free	Free	Free	Free	Free	Free	Free
3922.10.00	4.7%	3.1%	1.5%	Free	Free	Free	Free	Free	Free	Free
3922.20.00	4.7%	3.1%	1.5%	Free	Free	Free	Free	Free	Free	Free
3922.90.00	4.7%	3.1%	1.5%	Free	Free	Free	Free	Free	Free	Free
3923.10.00	1.5%	Free	Free	Free	Free	Free	Free	Free	Free	Free
3923.29.00	1.5%	Free	Free	Free	Free	Free	Free	Free	Free	Free
3923.40.00	3.9%	2.6%	1.3%	Free	Free	Free	Free	Free	Free	Free
3923.50.00	3.9%	2.6%	1.3%	Free	Free	Free	Free	Free	Free	Free
3923.90.00	1.5%	Free	Free	Free	Free	Free	Free	Free	Free	Free
3924.10.10	1.7%	Free	Free	Free	Free	Free	Free	Free	Free	Free
3924.10.20	3.2%	Free	Free	Free	Free	Free	Free	Free	Free	Free

Annex II (continued)
-80-

HTS Subheading	December 17, 2001	2002	2003	2004	2005	2006	2007	2008	2009	2010
3924.10.30	2.6%	Free	Free	Free	Free	Free	Free	Free	Free	Free
3924.90.10	1.6%	Free	Free	Free	Free	Free	Free	Free	Free	Free
3924.90.20	1.7%	Free	Free	Free	Free	Free	Free	Free	Free	Free
3924.90.55	1.7%	Free	Free	Free	Free	Free	Free	Free	Free	Free
3925.10.00	4.7%	3.1%	1.5%	Free	Free	Free	Free	Free	Free	Free
3925.20.00	3.9%	2.6%	1.3%	Free	Free	Free	Free	Free	Free	Free
3925.30.10	1.6%	Free	Free	Free	Free	Free	Free	Free	Free	Free
3925.30.50	3.9%	2.6%	1.3%	Free	Free	Free	Free	Free	Free	Free
3925.90.00	3.9%	2.6%	1.3%	Free	Free	Free	Free	Free	Free	Free
3926.10.00	2.6%	Free	Free	Free	Free	Free	Free	Free	Free	Free
3926.20.30	1.5%	Free	Free	Free	Free	Free	Free	Free	Free	Free
3926.20.40	7.1%	4.7%	2.3%	Free	Free	Free	Free	Free	Free	Free
3926.20.90	2.5%	Free	Free	Free	Free	Free	Free	Free	Free	Free
3926.30.10	4.8%	3.2%	1.6%	Free	Free	Free	Free	Free	Free	Free
3926.30.50	3.9%	2.6%	1.3%	Free	Free	Free	Free	Free	Free	Free
3926.40.00	3.9%	2.6%	1.3%	Free	Free	Free	Free	Free	Free	Free
3926.90.10	1.7%	Free	Free	Free	Free	Free	Free	Free	Free	Free
3926.90.15	1.5%	Free	Free	Free	Free	Free	Free	Free	Free	Free
3926.90.20	2.1%	Free	Free	Free	Free	Free	Free	Free	Free	Free
3926.90.25	4.8%	3.2%	1.6%	Free	Free	Free	Free	Free	Free	Free
3926.90.30	2.1%	Free	Free	Free	Free	Free	Free	Free	Free	Free
3926.90.33	4.8%	3.2%	1.6%	Free	Free	Free	Free	Free	Free	Free
3926.90.35	4.8%	3.2%	1.6%	Free	Free	Free	Free	Free	Free	Free
3926.90.40	1.4%	Free	Free	Free	Free	Free	Free	Free	Free	Free
3926.90.45	1.7%	Free	Free	Free	Free	Free	Free	Free	Free	Free
3926.90.50	1.9%	Free	Free	Free	Free	Free	Free	Free	Free	Free
3926.90.55	3.8%	2.5%	1.2%	Free	Free	Free	Free	Free	Free	Free
3926.90.56	3.8%	2.5%	1.2%	Free	Free	Free	Free	Free	Free	Free
3926.90.57	4.8%	3.2%	1.6%	Free	Free	Free	Free	Free	Free	Free
3926.90.59	1.2%	Free	Free	Free	Free	Free	Free	Free	Free	Free
3926.90.60	2.1%	Free	Free	Free	Free	Free	Free	Free	Free	Free

Annex II (continued)
-81-

HTS Subheading	December 17, 2001	2002	2003	2004	2005	2006	2007	2008	2009	2010
3926.90.65	2.1%	Free	Free	Free	Free	Free	Free	Free	Free	Free
3926.90.70	3.9%	2.6%	1.3%	Free	Free	Free	Free	Free	Free	Free
3926.90.75	2.1%	Free	Free	Free	Free	Free	Free	Free	Free	Free
3926.90.77	1.2%	Free	Free	Free	Free	Free	Free	Free	Free	Free
3926.90.83	3.9%	2.6%	1.3%	Free	Free	Free	Free	Free	Free	Free
3926.90.85	6.2%	4.1%	2%	Free	Free	Free	Free	Free	Free	Free
3926.90.87	2.6%	Free	Free	Free	Free	Free	Free	Free	Free	Free
3926.90.98	2.6%	Free	Free	Free	Free	Free	Free	Free	Free	Free
4006.10.00	1.4%	Free	Free	Free	Free	Free	Free	Free	Free	Free
4006.90.50	1.3%	Free	Free	Free	Free	Free	Free	Free	Free	Free
4008.11.50	1.6%	Free	Free	Free	Free	Free	Free	Free	Free	Free
4008.19.60	1.6%	Free	Free	Free	Free	Free	Free	Free	Free	Free
4008.19.80	1.6%	Free	Free	Free	Free	Free	Free	Free	Free	Free
4008.29.20	1.4%	Free	Free	Free	Free	Free	Free	Free	Free	Free
4008.29.40	1.4%	Free	Free	Free	Free	Free	Free	Free	Free	Free
4009.10.00	1.2%	Free	Free	Free	Free	Free	Free	Free	Free	Free
4009.20.00	1.2%	Free	Free	Free	Free	Free	Free	Free	Free	Free
4009.30.00	1.2%	Free	Free	Free	Free	Free	Free	Free	Free	Free
4009.40.00	1.2%	Free	Free	Free	Free	Free	Free	Free	Free	Free
4009.50.00	1.2%	Free	Free	Free	Free	Free	Free	Free	Free	Free
4010.11.00	1.6%	Free	Free	Free	Free	Free	Free	Free	Free	Free
4010.12.10	2%	Free	Free	Free	Free	Free	Free	Free	Free	Free
4010.12.50	6%	4%	2%	Free	Free	Free	Free	Free	Free	Free
4010.12.55	4.8%	3.2%	1.6%	Free	Free	Free	Free	Free	Free	Free
4010.12.90	0.9%	Free	Free	Free	Free	Free	Free	Free	Free	Free
4010.13.00	1.6%	Free	Free	Free	Free	Free	Free	Free	Free	Free
4010.19.10	2%	Free	Free	Free	Free	Free	Free	Free	Free	Free
4010.19.50	6%	4%	2%	Free	Free	Free	Free	Free	Free	Free
4010.19.55	4.8%	3.2%	1.6%	Free	Free	Free	Free	Free	Free	Free
4010.19.80	0.9%	Free	Free	Free	Free	Free	Free	Free	Free	Free
4010.19.90	1.6%	Free	Free	Free	Free	Free	Free	Free	Free	Free

Annex II (continued)
-82-

HTS Subheading	December 17, 2001	2002	2003	2004	2005	2006	2007	2008	2009	2010
4010.21.30	1.7%	Free	Free	Free	Free	Free	Free	Free	Free	Free
4010.21.60	1.4%	Free	Free	Free	Free	Free	Free	Free	Free	Free
4010.22.30	1.7%	Free	Free	Free	Free	Free	Free	Free	Free	Free
4010.22.60	1.4%	Free	Free	Free	Free	Free	Free	Free	Free	Free
4010.23.30	2%	Free	Free	Free	Free	Free	Free	Free	Free	Free
4010.23.41	6%	4%	2%	Free	Free	Free	Free	Free	Free	Free
4010.23.45	4.8%	3.2%	1.6%	Free	Free	Free	Free	Free	Free	Free
4010.23.50	0.9%	Free	Free	Free	Free	Free	Free	Free	Free	Free
4010.23.90	1.6%	Free	Free	Free	Free	Free	Free	Free	Free	Free
4010.24.30	2%	Free	Free	Free	Free	Free	Free	Free	Free	Free
4010.24.41	6%	4%	2%	Free	Free	Free	Free	Free	Free	Free
4010.24.45	4.8%	3.2%	1.6%	Free	Free	Free	Free	Free	Free	Free
4010.24.50	0.9%	Free	Free	Free	Free	Free	Free	Free	Free	Free
4010.24.90	1.6%	Free	Free	Free	Free	Free	Free	Free	Free	Free
4010.29.10	1.7%	Free	Free	Free	Free	Free	Free	Free	Free	Free
4010.29.20	1.4%	Free	Free	Free	Free	Free	Free	Free	Free	Free
4010.29.30	2%	Free	Free	Free	Free	Free	Free	Free	Free	Free
4010.29.41	6%	4%	2%	Free	Free	Free	Free	Free	Free	Free
4010.29.45	4.8%	3.2%	1.6%	Free	Free	Free	Free	Free	Free	Free
4010.29.50	0.9%	Free	Free	Free	Free	Free	Free	Free	Free	Free
4010.29.90	1.6%	Free	Free	Free	Free	Free	Free	Free	Free	Free
4011.10.10	2%	Free	Free	Free	Free	Free	Free	Free	Free	Free
4011.10.50	1.7%	Free	Free	Free	Free	Free	Free	Free	Free	Free
4011.20.10	2%	Free	Free	Free	Free	Free	Free	Free	Free	Free
4011.20.50	1.7%	Free	Free	Free	Free	Free	Free	Free	Free	Free
4011.99.40	2%	Free	Free	Free	Free	Free	Free	Free	Free	Free
4011.99.80	1.7%	Free	Free	Free	Free	Free	Free	Free	Free	Free
4012.10.40	2%	Free	Free	Free	Free	Free	Free	Free	Free	Free
4012.10.80	1.7%	Free	Free	Free	Free	Free	Free	Free	Free	Free
4012.90.45	2.1%	Free	Free	Free	Free	Free	Free	Free	Free	Free
4012.90.90	1.3%	Free	Free	Free	Free	Free	Free	Free	Free	Free

Annex II (continued)
-83-

HTS Subheading	December 17, 2001	2002	2003	2004	2005	2006	2007	2008	2009	2010
4013.10.00	1.8%	Free	Free	Free	Free	Free	Free	Free	Free	Free
4013.90.50	1.8%	Free	Free	Free	Free	Free	Free	Free	Free	Free
4014.90.50	2.1%	Free	Free	Free	Free	Free	Free	Free	Free	Free
4015.19.10	1.5%	Free	Free	Free	Free	Free	Free	Free	Free	Free
4015.19.50	11.2%	8.4%	5.6%	2.8%	Free	Free	Free	Free	Free	Free
4015.90.00	2%	Free	Free	Free	Free	Free	Free	Free	Free	Free
4016.91.00	1.3%	Free	Free	Free	Free	Free	Free	Free	Free	Free
4016.92.00	2.1%	Free	Free	Free	Free	Free	Free	Free	Free	Free
4016.93.10	1.2%	Free	Free	Free	Free	Free	Free	Free	Free	Free
4016.93.50	1.2%	Free	Free	Free	Free	Free	Free	Free	Free	Free
4016.94.00	2.1%	Free	Free	Free	Free	Free	Free	Free	Free	Free
4016.95.00	2.1%	Free	Free	Free	Free	Free	Free	Free	Free	Free
4016.99.03	1.5%	Free	Free	Free	Free	Free	Free	Free	Free	Free
4016.99.05	1.7%	Free	Free	Free	Free	Free	Free	Free	Free	Free
4016.99.10	1.6%	Free	Free	Free	Free	Free	Free	Free	Free	Free
4016.99.15	1.3%	Free	Free	Free	Free	Free	Free	Free	Free	Free
4016.99.20	2.1%	Free	Free	Free	Free	Free	Free	Free	Free	Free
4016.99.55	1.2%	Free	Free	Free	Free	Free	Free	Free	Free	Free
4017.00.00	1.3%	Free	Free	Free	Free	Free	Free	Free	Free	Free
4104.10.60	1.2%	Free	Free	Free	Free	Free	Free	Free	Free	Free
4104.10.80	1.8%	Free	Free	Free	Free	Free	Free	Free	Free	Free
4104.21.00	2.5%	Free	Free	Free	Free	Free	Free	Free	Free	Free
4104.22.00	1.6%	Free	Free	Free	Free	Free	Free	Free	Free	Free
4104.29.30	1.2%	Free	Free	Free	Free	Free	Free	Free	Free	Free
4104.29.50	2.5%	Free	Free	Free	Free	Free	Free	Free	Free	Free
4104.29.90	1.6%	Free	Free	Free	Free	Free	Free	Free	Free	Free
4104.31.20	1.2%	Free	Free	Free	Free	Free	Free	Free	Free	Free
4104.31.40	1.4%	Free	Free	Free	Free	Free	Free	Free	Free	Free
4104.31.50	1.6%	Free	Free	Free	Free	Free	Free	Free	Free	Free
4104.31.60	2.5%	Free	Free	Free	Free	Free	Free	Free	Free	Free
4104.31.80	1.2%	Free	Free	Free	Free	Free	Free	Free	Free	Free

Annex II (continued)
-84-

HTS Subheading	December 17, 2001	2002	2003	2004	2005	2006	2007	2008	2009	2010
4104.39.20	1.2%	Free	Free	Free	Free	Free	Free	Free	Free	Free
4104.39.40	1.4%	Free	Free	Free	Free	Free	Free	Free	Free	Free
4104.39.50	2.5%	Free	Free	Free	Free	Free	Free	Free	Free	Free
4104.39.60	2.5%	Free	Free	Free	Free	Free	Free	Free	Free	Free
4104.39.80	1.2%	Free	Free	Free	Free	Free	Free	Free	Free	Free
4105.12.00	1%	Free	Free	Free	Free	Free	Free	Free	Free	Free
4105.19.10	1%	Free	Free	Free	Free	Free	Free	Free	Free	Free
4105.19.20	1%	Free	Free	Free	Free	Free	Free	Free	Free	Free
4105.20.30	1%	Free	Free	Free	Free	Free	Free	Free	Free	Free
4105.20.60	1%	Free	Free	Free	Free	Free	Free	Free	Free	Free
4106.12.00	1.8%	Free	Free	Free	Free	Free	Free	Free	Free	Free
4106.19.20	1.2%	Free	Free	Free	Free	Free	Free	Free	Free	Free
4106.19.30	1.2%	Free	Free	Free	Free	Free	Free	Free	Free	Free
4106.20.30	1.2%	Free	Free	Free	Free	Free	Free	Free	Free	Free
4106.20.60	1.4%	Free	Free	Free	Free	Free	Free	Free	Free	Free
4107.10.20	2.1%	Free	Free	Free	Free	Free	Free	Free	Free	Free
4107.10.30	2.1%	Free	Free	Free	Free	Free	Free	Free	Free	Free
4107.21.00	2.5%	Free	Free	Free	Free	Free	Free	Free	Free	Free
4107.90.30	1.6%	Free	Free	Free	Free	Free	Free	Free	Free	Free
4107.90.60	0.8%	Free	Free	Free	Free	Free	Free	Free	Free	Free
4108.00.00	1.6%	Free	Free	Free	Free	Free	Free	Free	Free	Free
4109.00.30	1.1%	Free	Free	Free	Free	Free	Free	Free	Free	Free
4109.00.40	1.8%	Free	Free	Free	Free	Free	Free	Free	Free	Free
4109.00.70	0.8%	Free	Free	Free	Free	Free	Free	Free	Free	Free
4201.00.30	1.2%	Free	Free	Free	Free	Free	Free	Free	Free	Free
4201.00.60	1.4%	Free	Free	Free	Free	Free	Free	Free	Free	Free
4202.11.00	6%	4%	2%	Free	Free	Free	Free	Free	Free	Free
4202.19.00	16%	12%	8%	4%	Free	Free	Free	Free	Free	Free
4202.21.30	3.9%	2.6%	1.3%	Free	Free	Free	Free	Free	Free	Free
4202.21.60	7.5%	5%	2.5%	Free	Free	Free	Free	Free	Free	Free
4202.21.90	6.7%	4.5%	2.2%	Free	Free	Free	Free	Free	Free	Free

Annex II (continued)
-85-

HTS Subheading	December 17, 2001	2002	2003	2004	2005	2006	2007	2008	2009	2010
4202.22.15	14%	10.5%	7%	3.5%	Free	Free	Free	Free	Free	Free
4202.22.35	6.3%	4.2%	2.1%	Free	Free	Free	Free	Free	Free	Free
4202.22.40	5.8%	3.9%	1.9%	Free	Free	Free	Free	Free	Free	Free
4202.22.45	5%	3.3%	1.6%	Free	Free	Free	Free	Free	Free	Free
4202.22.60	4.5%	3%	1.5%	Free	Free	Free	Free	Free	Free	Free
4202.22.70	5.2%	3.5%	1.7%	Free	Free	Free	Free	Free	Free	Free
4202.22.80	14.8%	11.1%	7.4%	3.7%	Free	Free	Free	Free	Free	Free
4202.29.10	3.9%	2.6%	1.3%	Free	Free	Free	Free	Free	Free	Free
4202.29.20	1.6%	Free	Free	Free	Free	Free	Free	Free	Free	Free
4202.29.50	5.8%	3.9%	1.9%	Free	Free	Free	Free	Free	Free	Free
4202.29.90	16%	12%	8%	4%	Free	Free	Free	Free	Free	Free
4202.31.30	1.8%	Free	Free	Free	Free	Free	Free	Free	Free	Free
4202.31.60	6%	4%	2%	Free	Free	Free	Free	Free	Free	Free
4202.32.10	9¢/kg + 3.4%	6¢/kg + 2.3%	3¢/kg + 1.1%	Free	Free	Free	Free	Free	Free	Free
4202.32.20	16%	12%	8%	4%	Free	Free	Free	Free	Free	Free
4202.32.40	5%	3.3%	1.6%	Free	Free	Free	Free	Free	Free	Free
4202.32.80	4.5%	3%	1.5%	Free	Free	Free	Free	Free	Free	Free
4202.32.95	14.8%	11.1%	7.4%	3.7%	Free	Free	Free	Free	Free	Free
4202.39.10	3.9%	2.6%	1.3%	Free	Free	Free	Free	Free	Free	Free
4202.39.20	1.6%	Free	Free	Free	Free	Free	Free	Free	Free	Free
4202.39.50	5.8%	3.9%	1.9%	Free	Free	Free	Free	Free	Free	Free
4202.39.90	16%	12%	8%	4%	Free	Free	Free	Free	Free	Free
4202.91.00	2.2%	Free	Free	Free	Free	Free	Free	Free	Free	Free
4202.92.15	5%	3.3%	1.6%	Free	Free	Free	Free	Free	Free	Free
4202.92.20	4.5%	3%	1.5%	Free	Free	Free	Free	Free	Free	Free
4202.92.30	14.8%	11.1%	7.4%	3.7%	Free	Free	Free	Free	Free	Free
4202.92.45	16%	12%	8%	4%	Free	Free	Free	Free	Free	Free
4202.92.50	2.1%	Free	Free	Free	Free	Free	Free	Free	Free	Free
4202.92.60	5%	3.3%	1.6%	Free	Free	Free	Free	Free	Free	Free
4202.92.90	14.8%	11.1%	7.4%	3.7%	Free	Free	Free	Free	Free	Free
4202.99.10	1.7%	Free	Free	Free	Free	Free	Free	Free	Free	Free

Annex II (continued)
-86-

HTS Subheading	December 17, 2001	2002	2003	2004	2005	2006	2007	2008	2009	2010
4202.99.20	2.1%	Free	Free	Free	Free	Free	Free	Free	Free	Free
4202.99.50	5.8%	3.9%	1.9%	Free	Free	Free	Free	Free	Free	Free
4202.99.90	16%	12%	8%	4%	Free	Free	Free	Free	Free	Free
4203.10.20	2.3%	Free	Free	Free	Free	Free	Free	Free	Free	Free
4203.10.40	4.5%	3%	1.5%	Free	Free	Free	Free	Free	Free	Free
4203.21.20	1.5%	Free	Free	Free	Free	Free	Free	Free	Free	Free
4203.21.55	1.7%	Free	Free	Free	Free	Free	Free	Free	Free	Free
4203.21.60	4.1%	2.7%	1.3%	Free	Free	Free	Free	Free	Free	Free
4203.21.80	2.4%	Free	Free	Free	Free	Free	Free	Free	Free	Free
4203.29.05	10%	7.5%	5%	2.5%	Free	Free	Free	Free	Free	Free
4203.29.08	11.2%	8.4%	5.6%	2.8%	Free	Free	Free	Free	Free	Free
4203.29.15	11.2%	8.4%	5.6%	2.8%	Free	Free	Free	Free	Free	Free
4203.29.18	11.2%	8.4%	5.6%	2.8%	Free	Free	Free	Free	Free	Free
4203.29.20	10%	7.5%	5%	2.5%	Free	Free	Free	Free	Free	Free
4203.29.30	11.2%	8.4%	5.6%	2.8%	Free	Free	Free	Free	Free	Free
4203.29.40	10%	7.5%	5%	2.5%	Free	Free	Free	Free	Free	Free
4203.29.50	10%	7.5%	5%	2.5%	Free	Free	Free	Free	Free	Free
4203.30.00	1.3%	Free	Free	Free	Free	Free	Free	Free	Free	Free
4203.40.30	2.4%	Free	Free	Free	Free	Free	Free	Free	Free	Free
4204.00.30	1.4%	Free	Free	Free	Free	Free	Free	Free	Free	Free
4205.00.40	0.9%	Free	Free	Free	Free	Free	Free	Free	Free	Free
4205.00.60	2.4%	Free	Free	Free	Free	Free	Free	Free	Free	Free
4206.10.30	1.7%	Free	Free	Free	Free	Free	Free	Free	Free	Free
4206.10.90	1.9%	Free	Free	Free	Free	Free	Free	Free	Free	Free
4301.60.30	3.8%	2.5%	1.2%	Free	Free	Free	Free	Free	Free	Free
4302.11.00	1%	Free	Free	Free	Free	Free	Free	Free	Free	Free
4302.12.00	1.3%	Free	Free	Free	Free	Free	Free	Free	Free	Free
4302.13.00	1.1%	Free	Free	Free	Free	Free	Free	Free	Free	Free
4302.19.15	4.2%	2.8%	1.4%	Free	Free	Free	Free	Free	Free	Free
4302.19.30	0.7%	Free	Free	Free	Free	Free	Free	Free	Free	Free
4302.19.45	1.1%	Free	Free	Free	Free	Free	Free	Free	Free	Free

Annex II (continued)
-87-

HTS Subheading	December 17, 2001	2002	2003	2004	2005	2006	2007	2008	2009	2010
4302.19.60	1.7%	Free	Free	Free	Free	Free	Free	Free	Free	Free
4302.19.75	0.8%	Free	Free	Free	Free	Free	Free	Free	Free	Free
4302.20.30	1%	Free	Free	Free	Free	Free	Free	Free	Free	Free
4302.20.60	1.7%	Free	Free	Free	Free	Free	Free	Free	Free	Free
4302.20.90	0.8%	Free	Free	Free	Free	Free	Free	Free	Free	Free
4302.30.00	3.9%	2.6%	1.3%	Free	Free	Free	Free	Free	Free	Free
4303.10.00	2%	Free	Free	Free	Free	Free	Free	Free	Free	Free
4304.00.00	4.8%	3.2%	1.6%	Free	Free	Free	Free	Free	Free	Free
4405.00.00	1.6%	Free	Free	Free	Free	Free	Free	Free	Free	Free
4409.10.65	2.4%	Free	Free	Free	Free	Free	Free	Free	Free	Free
4409.20.65	2.4%	Free	Free	Free	Free	Free	Free	Free	Free	Free
4411.19.40	4.5%	3%	1.5%	Free	Free	Free	Free	Free	Free	Free
4411.29.20	0.9¢/kg + 0.7%	Free	Free	Free	Free	Free	Free	Free	Free	Free
4411.29.90	1.9%	Free	Free	Free	Free	Free	Free	Free	Free	Free
4412.13.25	6%	4%	2%	Free	Free	Free	Free	Free	Free	Free
4412.13.40	6%	4%	2%	Free	Free	Free	Free	Free	Free	Free
4412.13.50	6%	4%	2%	Free	Free	Free	Free	Free	Free	Free
4412.13.60	6%	4%	2%	Free	Free	Free	Free	Free	Free	Free
4412.13.90	6%	4%	2%	Free	Free	Free	Free	Free	Free	Free
4412.14.25	3.8%	2.5%	1.2%	Free	Free	Free	Free	Free	Free	Free
4412.14.30	6%	4%	2%	Free	Free	Free	Free	Free	Free	Free
4412.14.55	6%	4%	2%	Free	Free	Free	Free	Free	Free	Free
4412.19.30	1.7%	Free	Free	Free	Free	Free	Free	Free	Free	Free
4412.19.40	6%	4%	2%	Free	Free	Free	Free	Free	Free	Free
4412.19.50	3.8%	2.5%	1.2%	Free	Free	Free	Free	Free	Free	Free
4412.22.30	6%	4%	2%	Free	Free	Free	Free	Free	Free	Free
4412.22.40	6%	4%	2%	Free	Free	Free	Free	Free	Free	Free
4412.29.35	6%	4%	2%	Free	Free	Free	Free	Free	Free	Free
4412.29.45	6%	4%	2%	Free	Free	Free	Free	Free	Free	Free
4412.92.30	1.7%	Free	Free	Free	Free	Free	Free	Free	Free	Free
4412.92.40	6%	4%	2%	Free	Free	Free	Free	Free	Free	Free

Annex II (continued)
-88-

HTS Subheading	December 17, 2001	2002	2003	2004	2005	2006	2007	2008	2009	2010
4412.92.50	3.8%	2.5%	1.2%	Free	Free	Free	Free	Free	Free	Free
4412.99.35	1.7%	Free	Free	Free	Free	Free	Free	Free	Free	Free
4412.99.45	6%	4%	2%	Free	Free	Free	Free	Free	Free	Free
4412.99.55	3.8%	2.5%	1.2%	Free	Free	Free	Free	Free	Free	Free
4413.00.00	1.8%	Free	Free	Free	Free	Free	Free	Free	Free	Free
4415.10.90	8.5%	6.4%	4.2%	2.1%	Free	Free	Free	Free	Free	Free
4415.20.80	8.5%	6.4%	4.2%	2.1%	Free	Free	Free	Free	Free	Free
4416.00.90	1.6%	Free	Free	Free	Free	Free	Free	Free	Free	Free
4417.00.80	3.8%	2.5%	1.2%	Free	Free	Free	Free	Free	Free	Free
4418.10.00	1.6%	Free	Free	Free	Free	Free	Free	Free	Free	Free
4418.20.40	2.4%	Free	Free	Free	Free	Free	Free	Free	Free	Free
4418.20.80	2.4%	Free	Free	Free	Free	Free	Free	Free	Free	Free
4418.40.00	1.6%	Free	Free	Free	Free	Free	Free	Free	Free	Free
4418.90.40	1.6%	Free	Free	Free	Free	Free	Free	Free	Free	Free
4419.00.40	3.9%	2.6%	1.3%	Free	Free	Free	Free	Free	Free	Free
4419.00.80	1.6%	Free	Free	Free	Free	Free	Free	Free	Free	Free
4420.90.45	2.1%	Free	Free	Free	Free	Free	Free	Free	Free	Free
4420.90.80	1.6%	Free	Free	Free	Free	Free	Free	Free	Free	Free
4421.10.00	1.6%	Free	Free	Free	Free	Free	Free	Free	Free	Free
4421.90.20	2.4%	Free	Free	Free	Free	Free	Free	Free	Free	Free
4421.90.30	8.5%	6.4%	4.2%	2.1%	Free	Free	Free	Free	Free	Free
4421.90.40	3.8%	2.5%	1.2%	Free	Free	Free	Free	Free	Free	Free
4421.90.60	3.8%	2.5%	1.2%	Free	Free	Free	Free	Free	Free	Free
4421.90.80	4.8¢/gross	3.2¢/gross	1.6¢/gross	Free	Free	Free	Free	Free	Free	Free
4421.90.85	2.4%	Free	Free	Free	Free	Free	Free	Free	Free	Free
4421.90.98	1.6%	Free	Free	Free	Free	Free	Free	Free	Free	Free
4503.90.60	11.2%	8.4%	5.6%	2.8%	Free	Free	Free	Free	Free	Free
4601.10.00	1.3%	Free	Free	Free	Free	Free	Free	Free	Free	Free
4601.20.40	1.6%	Free	Free	Free	Free	Free	Free	Free	Free	Free
4601.20.60	2.4%	Free	Free	Free	Free	Free	Free	Free	Free	Free
4601.20.90	6%	4%	2%	Free	Free	Free	Free	Free	Free	Free

Annex II (continued)
-89-

HTS Subheading	December 17, 2001	2002	2003	2004	2005	2006	2007	2008	2009	2010
4601.91.20	4.9%	3.3%	1.6%	Free	Free	Free	Free	Free	Free	Free
4601.99.00	1.6%	Free	Free	Free	Free	Free	Free	Free	Free	Free
4602.10.05	2.5%	Free	Free	Free	Free	Free	Free	Free	Free	Free
4602.10.09	7.5%	5%	2.5%	Free	Free	Free	Free	Free	Free	Free
4602.10.12	4.3%	2.9%	1.4%	Free	Free	Free	Free	Free	Free	Free
4602.10.16	2.5%	Free	Free	Free	Free	Free	Free	Free	Free	Free
4602.10.18	2.2%	Free	Free	Free	Free	Free	Free	Free	Free	Free
4602.10.21	4.6%	3.1%	1.5%	Free	Free	Free	Free	Free	Free	Free
4602.10.22	4.3%	2.9%	1.4%	Free	Free	Free	Free	Free	Free	Free
4602.10.23	6.7%	4.5%	2.2%	Free	Free	Free	Free	Free	Free	Free
4602.10.25	14.4%	10.8%	7.2%	3.6%	Free	Free	Free	Free	Free	Free
4602.10.29	3.9%	2.6%	1.3%	Free	Free	Free	Free	Free	Free	Free
4602.10.45	4.9%	3.3%	1.6%	Free	Free	Free	Free	Free	Free	Free
4602.10.80	1.1%	Free	Free	Free	Free	Free	Free	Free	Free	Free
4602.90.00	1.7%	Free	Free	Free	Free	Free	Free	Free	Free	Free
5003.90.00	1.2%	Free	Free	Free	Free	Free	Free	Free	Free	Free
5007.10.30	1.2%	Free	Free	Free	Free	Free	Free	Free	Free	Free
5007.10.60	4.1%	2.7%	1.3%	Free	Free	Free	Free	Free	Free	Free
5007.90.30	1.2%	Free	Free	Free	Free	Free	Free	Free	Free	Free
5007.90.60	4.1%	2.7%	1.3%	Free	Free	Free	Free	Free	Free	Free
5101.11.60	9.3¢/clean kg	Free	Free	Free	Free	Free	Free	Free	Free	Free
5101.19.60	14¢/clean kg	9.3¢/clean kg	4.6¢/clean kg	Free	Free	Free	Free	Free	Free	Free
5101.21.40	15.4¢/clean kg	10.3¢/clean kg	5.1¢/clean kg	Free	Free	Free	Free	Free	Free	Free
5101.21.70	4.8¢/kg + 3.9%	3.2¢/kg + 2.6%	1.6¢/kg + 1.3%	Free	Free	Free	Free	Free	Free	Free
5101.29.40	15.4¢/clean kg	10.3¢/clean kg	5.1¢/clean kg	Free	Free	Free	Free	Free	Free	Free
5101.29.70	4.8¢/kg + 3.9%	3.2¢/kg + 2.6%	1.6¢/kg + 1.3%	Free	Free	Free	Free	Free	Free	Free
5101.30.40	18.3¢/kg	12.2¢/kg	6.1¢/kg	Free	Free	Free	Free	Free	Free	Free
5101.30.70	4.8¢/kg + 3.9%	3.2¢/kg + 2.6%	1.6¢/kg + 1.3%	Free	Free	Free	Free	Free	Free	Free
5102.10.20	2.5¢/clean kg	Free	Free	Free	Free	Free	Free	Free	Free	Free
5102.10.40	2.5¢/clean kg	Free	Free	Free	Free	Free	Free	Free	Free	Free
5102.10.60	0.2%	Free	Free	Free	Free	Free	Free	Free	Free	Free

Annex II (continued)
-90-

HTS Subheading	December 17, 2001	2002	2003	2004	2005	2006	2007	2008	2009	2010
5102.10.90	2.4¢/kg + 2%	Free	Free	Free	Free	Free	Free	Free	Free	Free
5103.10.00	1.3¢/kg	Free	Free	Free	Free	Free	Free	Free	Free	Free
5103.20.00	1.3¢/kg	Free	Free	Free	Free	Free	Free	Free	Free	Free
5103.30.00	5.2%	3.5%	1.7%	Free	Free	Free	Free	Free	Free	Free
5105.10.00	5.2¢/kg + 4.2%	3.5¢/kg + 2.8%	1.7¢/kg + 1.4%	Free	Free	Free	Free	Free	Free	Free
5105.21.00	3.9¢/kg + 3.2%	2.6¢/kg + 2.1%	1.3¢/kg + 1%	Free	Free	Free	Free	Free	Free	Free
5105.29.00	4¢/kg + 3.3%	2.7¢/kg + 2.2%	1.3¢/kg + 1.1%	Free	Free	Free	Free	Free	Free	Free
5105.30.00	5.4¢/kg + 4.3%	3.6¢/kg + 2.9%	1.8¢/kg + 1.4%	Free	Free	Free	Free	Free	Free	Free
5106.10.00	5.4%	3.6%	1.8%	Free	Free	Free	Free	Free	Free	Free
5106.20.00	5.4%	3.6%	1.8%	Free	Free	Free	Free	Free	Free	Free
5107.10.30	5.4%	3.6%	1.8%	Free	Free	Free	Free	Free	Free	Free
5107.10.60	5.4%	3.6%	1.8%	Free	Free	Free	Free	Free	Free	Free
5107.20.30	5.4%	3.6%	1.8%	Free	Free	Free	Free	Free	Free	Free
5107.20.60	5.4%	3.6%	1.8%	Free	Free	Free	Free	Free	Free	Free
5108.10.30	2.2%	Free	Free	Free	Free	Free	Free	Free	Free	Free
5108.10.60	4.5%	3%	1.5%	Free	Free	Free	Free	Free	Free	Free
5108.20.30	2.2%	Free	Free	Free	Free	Free	Free	Free	Free	Free
5108.20.60	4.5%	3%	1.5%	Free	Free	Free	Free	Free	Free	Free
5109.10.40	2.2%	Free	Free	Free	Free	Free	Free	Free	Free	Free
5109.10.80	5.4%	3.6%	1.8%	Free	Free	Free	Free	Free	Free	Free
5109.10.90	5.4%	3.6%	1.8%	Free	Free	Free	Free	Free	Free	Free
5109.90.40	2.2%	Free	Free	Free	Free	Free	Free	Free	Free	Free
5109.90.80	5.4%	3.6%	1.8%	Free	Free	Free	Free	Free	Free	Free
5109.90.90	5.4%	3.6%	1.8%	Free	Free	Free	Free	Free	Free	Free
5111.11.20	5.2%	3.5%	1.7%	Free	Free	Free	Free	Free	Free	Free
5111.11.30	5.6¢/kg + 8.8%	4.2¢/kg + 6.6%	2.8¢/kg + 4.4%	1.4¢/kg + 2.2%	Free	Free	Free	Free	Free	Free
5111.11.70	26.4%	23.5%	20.5%	17.6%	14.7%	11.7%	8.8%	5.8%	2.9%	Free
5111.19.10	5.2%	3.5%	1.7%	Free	Free	Free	Free	Free	Free	Free
5111.19.20	5.6¢/kg + 8.8%	4.2¢/kg + 6.6%	2.8¢/kg + 4.4%	1.4¢/kg + 2.2%	Free	Free	Free	Free	Free	Free
5111.19.60	26.4%	23.5%	20.5%	17.6%	14.7%	11.7%	8.8%	5.8%	2.9%	Free
5111.20.05	5.2%	3.5%	1.7%	Free	Free	Free	Free	Free	Free	Free

Annex II (continued)
-91-

HTS Subheading	December 17, 2001	2002	2003	2004	2005	2006	2007	2008	2009	2010
5111.20.10	5.2%	3.5%	1.7%	Free	Free	Free	Free	Free	Free	Free
5111.20.90	17.4¢/kg + 27.1%	15.5¢/kg + 24.1%	13.5¢/kg + 21.1%	11.6¢/kg + 18.1%	9.7¢/kg + 15.1%	7.7¢/kg + 12%	5.8¢/kg + 9%	3.8¢/kg + 6%	1.9¢/kg + 3%	Free
5111.30.05	5.2%	3.5%	1.7%	Free	Free	Free	Free	Free	Free	Free
5111.30.10	5.2%	3.5%	1.7%	Free	Free	Free	Free	Free	Free	Free
5111.30.90	17.4¢/kg + 27.1%	15.5¢/kg + 24.1%	13.5¢/kg + 21.1%	11.6¢/kg + 18.1%	9.7¢/kg + 15.1%	7.7¢/kg + 12%	5.8¢/kg + 9%	3.8¢/kg + 6%	1.9¢/kg + 3%	Free
5111.90.30	5.4%	3.6%	1.8%	Free	Free	Free	Free	Free	Free	Free
5111.90.40	5.2%	3.5%	1.7%	Free	Free	Free	Free	Free	Free	Free
5111.90.50	5.2%	3.5%	1.7%	Free	Free	Free	Free	Free	Free	Free
5111.90.90	25.3%	22.5%	19.7%	16.9%	14.1%	11.2%	8.4%	5.6%	2.8%	Free
5112.11.10	5.2%	3.5%	1.7%	Free	Free	Free	Free	Free	Free	Free
5112.11.30	26.4%	23.5%	20.5%	17.6%	14.7%	11.7%	8.8%	5.8%	2.9%	Free
5112.11.60	26.4%	23.5%	20.5%	17.6%	14.7%	11.7%	8.8%	5.8%	2.9%	Free
5112.19.20	5.2%	3.5%	1.7%	Free	Free	Free	Free	Free	Free	Free
5112.19.60	26.4%	23.5%	20.5%	17.6%	14.7%	11.7%	8.8%	5.8%	2.9%	Free
5112.19.95	26.4%	23.5%	20.5%	17.6%	14.7%	11.7%	8.8%	5.8%	2.9%	Free
5112.20.10	5.2%	3.5%	1.7%	Free	Free	Free	Free	Free	Free	Free
5112.20.20	5.2%	3.5%	1.7%	Free	Free	Free	Free	Free	Free	Free
5112.20.30	17.4¢/kg + 27.1%	15.5¢/kg + 24.1%	13.5¢/kg + 21.1%	11.6¢/kg + 18.1%	9.7¢/kg + 15.1%	7.7¢/kg + 12%	5.8¢/kg + 9%	3.8¢/kg + 6%	1.9¢/kg + 3%	Free
5112.30.10	5.2%	3.5%	1.7%	Free	Free	Free	Free	Free	Free	Free
5112.30.20	5.2%	3.5%	1.7%	Free	Free	Free	Free	Free	Free	Free
5112.30.30	17.4¢/kg + 27.1%	15.5¢/kg + 24.1%	13.5¢/kg + 21.1%	11.6¢/kg + 18.1%	9.7¢/kg + 15.1%	7.7¢/kg + 12%	5.8¢/kg + 9%	3.8¢/kg + 6%	1.9¢/kg + 3%	Free
5112.90.30	5.4%	3.6%	1.8%	Free	Free	Free	Free	Free	Free	Free
5112.90.40	5.2%	3.5%	1.7%	Free	Free	Free	Free	Free	Free	Free
5112.90.50	5.2%	3.5%	1.7%	Free	Free	Free	Free	Free	Free	Free
5112.90.90	25.3%	22.5%	19.7%	16.9%	14.1%	11.2%	8.4%	5.6%	2.8%	Free
5113.00.00	1.8%	Free	Free	Free	Free	Free	Free	Free	Free	Free
5202.91.00	2.1%	Free	Free	Free	Free	Free	Free	Free	Free	Free
5203.00.50	2.1%	Free	Free	Free	Free	Free	Free	Free	Free	Free

Annex II (continued)
-92-

HTS Subheading	December 17, 2001	2002	2003	2004	2005	2006	2007	2008	2009	2010
5204.11.00	2.3%	Free	Free	Free	Free	Free	Free	Free	Free	Free
5204.19.00	2.3%	Free	Free	Free	Free	Free	Free	Free	Free	Free
5204.20.00	2.3%	Free	Free	Free	Free	Free	Free	Free	Free	Free
5205.11.10	1.8%	Free	Free	Free	Free	Free	Free	Free	Free	Free
5205.11.20	3.9%	2.6%	1.3%	Free	Free	Free	Free	Free	Free	Free
5205.12.10	3.9%	2.6%	1.3%	Free	Free	Free	Free	Free	Free	Free
5205.12.20	5.1%	3.4%	1.7%	Free	Free	Free	Free	Free	Free	Free
5205.13.10	4.8%	3.2%	1.6%	Free	Free	Free	Free	Free	Free	Free
5205.13.20	5.8%	3.9%	1.9%	Free	Free	Free	Free	Free	Free	Free
5205.14.10	5.8%	3.9%	1.9%	Free	Free	Free	Free	Free	Free	Free
5205.14.20	6.9%	4.6%	2.3%	Free	Free	Free	Free	Free	Free	Free
5205.15.10	7.4%	4.9%	2.4%	Free	Free	Free	Free	Free	Free	Free
5205.15.20	9.6%	7.2%	4.8%	2.4%	Free	Free	Free	Free	Free	Free
5205.21.00	4.3%	2.9%	1.4%	Free	Free	Free	Free	Free	Free	Free
5205.22.00	5.4%	3.6%	1.8%	Free	Free	Free	Free	Free	Free	Free
5205.23.00	6.4%	4.3%	2.1%	Free	Free	Free	Free	Free	Free	Free
5205.24.00	7.4%	4.9%	2.4%	Free	Free	Free	Free	Free	Free	Free
5205.26.00	9.6%	7.2%	4.8%	2.4%	Free	Free	Free	Free	Free	Free
5205.27.00	9.6%	7.2%	4.8%	2.4%	Free	Free	Free	Free	Free	Free
5205.28.00	9.6%	7.2%	4.8%	2.4%	Free	Free	Free	Free	Free	Free
5205.31.00	4.3%	2.9%	1.4%	Free	Free	Free	Free	Free	Free	Free
5205.32.00	5.4%	3.6%	1.8%	Free	Free	Free	Free	Free	Free	Free
5205.33.00	6.4%	4.3%	2.1%	Free	Free	Free	Free	Free	Free	Free
5205.34.00	7.4%	4.9%	2.4%	Free	Free	Free	Free	Free	Free	Free
5205.35.00	9.6%	7.2%	4.8%	2.4%	Free	Free	Free	Free	Free	Free
5205.41.00	3.9%	2.6%	1.3%	Free	Free	Free	Free	Free	Free	Free
5205.42.00	5.1%	3.4%	1.7%	Free	Free	Free	Free	Free	Free	Free
5205.43.00	6.4%	4.3%	2.1%	Free	Free	Free	Free	Free	Free	Free
5205.44.00	7.4%	4.9%	2.4%	Free	Free	Free	Free	Free	Free	Free
5205.46.00	9.6%	7.2%	4.8%	2.4%	Free	Free	Free	Free	Free	Free
5205.47.00	9.6%	7.2%	4.8%	2.4%	Free	Free	Free	Free	Free	Free

Annex II (continued)
-93-

HTS Subheading	December 17, 2001	2002	2003	2004	2005	2006	2007	2008	2009	2010
5205.48.00	9.6%	7.2%	4.8%	2.4%	Free	Free	Free	Free	Free	Free
5206.11.00	7.3%	4.9%	2.4%	Free	Free	Free	Free	Free	Free	Free
5206.12.00	7.3%	4.9%	2.4%	Free	Free	Free	Free	Free	Free	Free
5206.13.00	7.3%	4.9%	2.4%	Free	Free	Free	Free	Free	Free	Free
5206.14.00	7.3%	4.9%	2.4%	Free	Free	Free	Free	Free	Free	Free
5206.15.00	7.3%	4.9%	2.4%	Free	Free	Free	Free	Free	Free	Free
5206.21.00	7.3%	4.9%	2.4%	Free	Free	Free	Free	Free	Free	Free
5206.22.00	7.3%	4.9%	2.4%	Free	Free	Free	Free	Free	Free	Free
5206.23.00	7.3%	4.9%	2.4%	Free	Free	Free	Free	Free	Free	Free
5206.24.00	7.3%	4.9%	2.4%	Free	Free	Free	Free	Free	Free	Free
5206.25.00	7.3%	4.9%	2.4%	Free	Free	Free	Free	Free	Free	Free
5206.31.00	7.3%	4.9%	2.4%	Free	Free	Free	Free	Free	Free	Free
5206.32.00	7.3%	4.9%	2.4%	Free	Free	Free	Free	Free	Free	Free
5206.33.00	7.3%	4.9%	2.4%	Free	Free	Free	Free	Free	Free	Free
5206.34.00	7.3%	4.9%	2.4%	Free	Free	Free	Free	Free	Free	Free
5206.35.00	7.3%	4.9%	2.4%	Free	Free	Free	Free	Free	Free	Free
5206.41.00	7.3%	4.9%	2.4%	Free	Free	Free	Free	Free	Free	Free
5206.42.00	7.3%	4.9%	2.4%	Free	Free	Free	Free	Free	Free	Free
5206.43.00	7.3%	4.9%	2.4%	Free	Free	Free	Free	Free	Free	Free
5206.44.00	7.3%	4.9%	2.4%	Free	Free	Free	Free	Free	Free	Free
5206.45.00	7.3%	4.9%	2.4%	Free	Free	Free	Free	Free	Free	Free
5207.90.00	2.5%	Free	Free	Free	Free	Free	Free	Free	Free	Free
5208.11.20	5.2%	3.5%	1.7%	Free	Free	Free	Free	Free	Free	Free
5208.11.40	6.7%	4.5%	2.2%	Free	Free	Free	Free	Free	Free	Free
5208.11.80	8.4%	6.3%	4.2%	2.1%	Free	Free	Free	Free	Free	Free
5208.12.40	5.2%	3.5%	1.7%	Free	Free	Free	Free	Free	Free	Free
5208.12.60	6.7%	4.5%	2.2%	Free	Free	Free	Free	Free	Free	Free
5208.12.80	8.9%	6.7%	4.4%	2.2%	Free	Free	Free	Free	Free	Free
5208.13.00	5.9%	3.9%	1.9%	Free	Free	Free	Free	Free	Free	Free
5208.19.20	5.9%	3.9%	1.9%	Free	Free	Free	Free	Free	Free	Free
5208.19.40	5.2%	3.5%	1.7%	Free	Free	Free	Free	Free	Free	Free

Annex II (continued)
-94-

HTS Subheading	December 17, 2001	2002	2003	2004	2005	2006	2007	2008	2009	2010
5208.19.60	6.7%	4.5%	2.2%	Free	Free	Free	Free	Free	Free	Free
5208.19.80	8.9%	6.7%	4.4%	2.2%	Free	Free	Free	Free	Free	Free
5208.21.20	6.3%	4.2%	2.1%	Free	Free	Free	Free	Free	Free	Free
5208.21.40	8.1%	6.1%	4%	2%	Free	Free	Free	Free	Free	Free
5208.21.60	9.8%	7.3%	4.9%	2.4%	Free	Free	Free	Free	Free	Free
5208.22.40	6.3%	4.2%	2.1%	Free	Free	Free	Free	Free	Free	Free
5208.22.60	6.9%	4.6%	2.3%	Free	Free	Free	Free	Free	Free	Free
5208.22.80	9.8%	7.3%	4.9%	2.4%	Free	Free	Free	Free	Free	Free
5208.23.00	6.8%	4.5%	2.2%	Free	Free	Free	Free	Free	Free	Free
5208.29.20	6.2%	4.1%	2%	Free	Free	Free	Free	Free	Free	Free
5208.29.40	6.3%	4.2%	2.1%	Free	Free	Free	Free	Free	Free	Free
5208.29.60	8.1%	6.1%	4%	2%	Free	Free	Free	Free	Free	Free
5208.29.80	10.8%	8.1%	5.4%	2.7%	Free	Free	Free	Free	Free	Free
5208.31.20	2.1%	Free	Free	Free	Free	Free	Free	Free	Free	Free
5208.31.40	6.5%	4.3%	2.1%	Free	Free	Free	Free	Free	Free	Free
5208.31.60	8.3%	6.2%	4.1%	2%	Free	Free	Free	Free	Free	Free
5208.31.80	10.7%	8%	5.3%	2.6%	Free	Free	Free	Free	Free	Free
5208.32.10	2.1%	Free	Free	Free	Free	Free	Free	Free	Free	Free
5208.32.30	6%	4%	2%	Free	Free	Free	Free	Free	Free	Free
5208.32.40	8.3%	6.2%	4.1%	2%	Free	Free	Free	Free	Free	Free
5208.32.50	10.7%	8%	5.3%	2.6%	Free	Free	Free	Free	Free	Free
5208.33.00	8.2%	6.1%	4.1%	2%	Free	Free	Free	Free	Free	Free
5208.39.20	7%	4.7%	2.3%	Free	Free	Free	Free	Free	Free	Free
5208.39.40	6%	4%	2%	Free	Free	Free	Free	Free	Free	Free
5208.39.60	8.3%	6.2%	4.1%	2%	Free	Free	Free	Free	Free	Free
5208.39.80	10.7%	8%	5.3%	2.6%	Free	Free	Free	Free	Free	Free
5208.41.20	2.1%	Free	Free	Free	Free	Free	Free	Free	Free	Free
5208.41.40	6.5%	4.3%	2.1%	Free	Free	Free	Free	Free	Free	Free
5208.41.60	9.1%	6.8%	4.5%	2.2%	Free	Free	Free	Free	Free	Free
5208.41.80	11.7%	8.8%	5.8%	2.9%	Free	Free	Free	Free	Free	Free
5208.42.10	2.1%	Free	Free	Free	Free	Free	Free	Free	Free	Free

Annex II (continued)
-95-

HTS Subheading	December 17, 2001	2002	2003	2004	2005	2006	2007	2008	2009	2010
5208.42.30	6.5%	4.3%	2.1%	Free	Free	Free	Free	Free	Free	Free
5208.42.40	9.1%	6.8%	4.5%	2.2%	Free	Free	Free	Free	Free	Free
5208.42.50	11.7%	8.8%	5.8%	2.9%	Free	Free	Free	Free	Free	Free
5208.49.40	6.5%	4.3%	2.1%	Free	Free	Free	Free	Free	Free	Free
5208.49.60	8.3%	6.2%	4.1%	2%	Free	Free	Free	Free	Free	Free
5208.49.80	11.7%	8.8%	5.8%	2.9%	Free	Free	Free	Free	Free	Free
5208.51.20	2.1%	Free	Free	Free	Free	Free	Free	Free	Free	Free
5208.51.40	6.5%	4.3%	2.1%	Free	Free	Free	Free	Free	Free	Free
5208.51.60	9.1%	6.8%	4.5%	2.2%	Free	Free	Free	Free	Free	Free
5208.51.80	10.7%	8%	5.3%	2.6%	Free	Free	Free	Free	Free	Free
5208.52.10	2.1%	Free	Free	Free	Free	Free	Free	Free	Free	Free
5208.52.30	5.5%	3.7%	1.8%	Free	Free	Free	Free	Free	Free	Free
5208.52.40	9.1%	6.8%	4.5%	2.2%	Free	Free	Free	Free	Free	Free
5208.52.50	10.7%	8%	5.3%	2.6%	Free	Free	Free	Free	Free	Free
5208.53.00	7%	4.7%	2.3%	Free	Free	Free	Free	Free	Free	Free
5208.59.20	8.2%	6.1%	4.1%	2%	Free	Free	Free	Free	Free	Free
5208.59.40	5.5%	3.7%	1.8%	Free	Free	Free	Free	Free	Free	Free
5208.59.60	8.3%	6.2%	4.1%	2%	Free	Free	Free	Free	Free	Free
5208.59.80	10.1%	7.6%	5%	2.5%	Free	Free	Free	Free	Free	Free
5209.11.00	4.8%	3.2%	1.6%	Free	Free	Free	Free	Free	Free	Free
5209.12.00	4.8%	3.2%	1.6%	Free	Free	Free	Free	Free	Free	Free
5209.19.00	4.8%	3.2%	1.6%	Free	Free	Free	Free	Free	Free	Free
5209.21.00	5.7%	3.8%	1.9%	Free	Free	Free	Free	Free	Free	Free
5209.22.00	5.7%	3.8%	1.9%	Free	Free	Free	Free	Free	Free	Free
5209.29.00	5.7%	3.8%	1.9%	Free	Free	Free	Free	Free	Free	Free
5209.31.30	2.1%	Free	Free	Free	Free	Free	Free	Free	Free	Free
5209.31.60	6.4%	4.3%	2.1%	Free	Free	Free	Free	Free	Free	Free
5209.32.00	6.4%	4.3%	2.1%	Free	Free	Free	Free	Free	Free	Free
5209.39.00	6.4%	4.3%	2.1%	Free	Free	Free	Free	Free	Free	Free
5209.41.30	2.1%	Free	Free	Free	Free	Free	Free	Free	Free	Free
5209.41.60	6%	4%	2%	Free	Free	Free	Free	Free	Free	Free

Annex II (continued)
-96-

HTS Subheading	December 17, 2001	2002	2003	2004	2005	2006	2007	2008	2009	2010
5209.42.00	6.4%	4.3%	2.1%	Free	Free	Free	Free	Free	Free	Free
5209.43.00	6.4%	4.3%	2.1%	Free	Free	Free	Free	Free	Free	Free
5209.49.00	6.4%	4.3%	2.1%	Free	Free	Free	Free	Free	Free	Free
5209.51.30	2.1%	Free	Free	Free	Free	Free	Free	Free	Free	Free
5209.51.60	6.4%	4.3%	2.1%	Free	Free	Free	Free	Free	Free	Free
5209.52.00	6.4%	4.3%	2.1%	Free	Free	Free	Free	Free	Free	Free
5209.59.00	6.4%	4.3%	2.1%	Free	Free	Free	Free	Free	Free	Free
5210.11.40	6.3%	4.2%	2.1%	Free	Free	Free	Free	Free	Free	Free
5210.11.60	8.1%	6.1%	4%	2%	Free	Free	Free	Free	Free	Free
5210.11.80	10.8%	8.1%	5.4%	2.7%	Free	Free	Free	Free	Free	Free
5210.12.00	6.8%	4.5%	2.2%	Free	Free	Free	Free	Free	Free	Free
5210.19.20	6.8%	4.5%	2.2%	Free	Free	Free	Free	Free	Free	Free
5210.19.40	6.3%	4.2%	2.1%	Free	Free	Free	Free	Free	Free	Free
5210.19.60	6.9%	4.6%	2.3%	Free	Free	Free	Free	Free	Free	Free
5210.19.80	9.2%	6.9%	4.6%	2.3%	Free	Free	Free	Free	Free	Free
5210.21.40	6.5%	4.3%	2.1%	Free	Free	Free	Free	Free	Free	Free
5210.21.60	9.1%	6.8%	4.5%	2.2%	Free	Free	Free	Free	Free	Free
5210.21.80	10.7%	8%	5.3%	2.6%	Free	Free	Free	Free	Free	Free
5210.22.00	8.2%	6.1%	4.1%	2%	Free	Free	Free	Free	Free	Free
5210.29.20	8.2%	6.1%	4.1%	2%	Free	Free	Free	Free	Free	Free
5210.29.40	6.5%	4.3%	2.1%	Free	Free	Free	Free	Free	Free	Free
5210.29.60	9.1%	6.8%	4.5%	2.2%	Free	Free	Free	Free	Free	Free
5210.29.80	11.7%	8.8%	5.8%	2.9%	Free	Free	Free	Free	Free	Free
5210.31.40	8.1%	6.1%	4%	2%	Free	Free	Free	Free	Free	Free
5210.31.60	9.7%	7.3%	4.8%	2.4%	Free	Free	Free	Free	Free	Free
5210.31.80	12.4%	9.3%	6.2%	3.1%	Free	Free	Free	Free	Free	Free
5210.32.00	8.3%	6.2%	4.1%	2%	Free	Free	Free	Free	Free	Free
5210.39.20	8.3%	6.2%	4.1%	2%	Free	Free	Free	Free	Free	Free
5210.39.40	7%	4.7%	2.3%	Free	Free	Free	Free	Free	Free	Free
5210.39.60	9.7%	7.3%	4.8%	2.4%	Free	Free	Free	Free	Free	Free
5210.39.80	10.8%	8.1%	5.4%	2.7%	Free	Free	Free	Free	Free	Free

Annex II (continued)
-97-

HTS Subheading	December 17, 2001	2002	2003	2004	2005	2006	2007	2008	2009	2010
5210.41.40	8.1%	6.1%	4%	2%	Free	Free	Free	Free	Free	Free
5210.41.60	9.7%	7.3%	4.8%	2.4%	Free	Free	Free	Free	Free	Free
5210.41.80	12.4%	9.3%	6.2%	3.1%	Free	Free	Free	Free	Free	Free
5210.42.00	8.3%	6.2%	4.1%	2%	Free	Free	Free	Free	Free	Free
5210.49.20	8.3%	6.2%	4.1%	2%	Free	Free	Free	Free	Free	Free
5210.49.40	8.1%	6.1%	4%	2%	Free	Free	Free	Free	Free	Free
5210.49.60	8.8%	6.6%	4.4%	2.2%	Free	Free	Free	Free	Free	Free
5210.49.80	12.4%	9.3%	6.2%	3.1%	Free	Free	Free	Free	Free	Free
5210.51.40	8.1%	6.1%	4%	2%	Free	Free	Free	Free	Free	Free
5210.51.60	9.7%	7.3%	4.8%	2.4%	Free	Free	Free	Free	Free	Free
5210.51.80	12.4%	9.3%	6.2%	3.1%	Free	Free	Free	Free	Free	Free
5210.52.00	8.3%	6.2%	4.1%	2%	Free	Free	Free	Free	Free	Free
5210.59.20	8.3%	6.2%	4.1%	2%	Free	Free	Free	Free	Free	Free
5210.59.40	7%	4.7%	2.3%	Free	Free	Free	Free	Free	Free	Free
5210.59.60	8.8%	6.6%	4.4%	2.2%	Free	Free	Free	Free	Free	Free
5210.59.80	8.7%	6.5%	4.3%	2.1%	Free	Free	Free	Free	Free	Free
5211.11.00	5.7%	3.8%	1.9%	Free	Free	Free	Free	Free	Free	Free
5211.12.00	5.7%	3.8%	1.9%	Free	Free	Free	Free	Free	Free	Free
5211.19.00	5.7%	3.8%	1.9%	Free	Free	Free	Free	Free	Free	Free
5211.21.00	6.4%	4.3%	2.1%	Free	Free	Free	Free	Free	Free	Free
5211.22.00	6.4%	4.3%	2.1%	Free	Free	Free	Free	Free	Free	Free
5211.29.00	6.4%	4.3%	2.1%	Free	Free	Free	Free	Free	Free	Free
5211.31.00	6.5%	4.3%	2.1%	Free	Free	Free	Free	Free	Free	Free
5211.32.00	6.5%	4.3%	2.1%	Free	Free	Free	Free	Free	Free	Free
5211.39.00	6.5%	4.3%	2.1%	Free	Free	Free	Free	Free	Free	Free
5211.41.00	6.5%	4.3%	2.1%	Free	Free	Free	Free	Free	Free	Free
5211.42.00	6.5%	4.3%	2.1%	Free	Free	Free	Free	Free	Free	Free
5211.43.00	6.5%	4.3%	2.1%	Free	Free	Free	Free	Free	Free	Free
5211.49.00	6.5%	4.3%	2.1%	Free	Free	Free	Free	Free	Free	Free
5211.52.00	6.5%	4.3%	2.1%	Free	Free	Free	Free	Free	Free	Free
5211.59.00	6.5%	4.3%	2.1%	Free	Free	Free	Free	Free	Free	Free

Annex II (continued)
-98-

HTS Subheading	December 17, 2001	2002	2003	2004	2005	2006	2007	2008	2009	2010
5212.11.10	20.7%	18.4%	16.1%	13.8%	11.5%	9.2%	6.9%	4.6%	2.3%	Free
5212.11.60	5.8%	3.9%	1.9%	Free	Free	Free	Free	Free	Free	Free
5212.12.10	20.7%	18.4%	16.1%	13.8%	11.5%	9.2%	6.9%	4.6%	2.3%	Free
5212.12.60	5.8%	3.9%	1.9%	Free	Free	Free	Free	Free	Free	Free
5212.13.10	20.7%	18.4%	16.1%	13.8%	11.5%	9.2%	6.9%	4.6%	2.3%	Free
5212.13.60	5.8%	3.9%	1.9%	Free	Free	Free	Free	Free	Free	Free
5212.14.10	20.7%	18.4%	16.1%	13.8%	11.5%	9.2%	6.9%	4.6%	2.3%	Free
5212.14.60	5.8%	3.9%	1.9%	Free	Free	Free	Free	Free	Free	Free
5212.15.60	5.8%	3.9%	1.9%	Free	Free	Free	Free	Free	Free	Free
5212.21.10	20.7%	18.4%	16.1%	13.8%	11.5%	9.2%	6.9%	4.6%	2.3%	Free
5212.21.60	5.8%	3.9%	1.9%	Free	Free	Free	Free	Free	Free	Free
5212.22.10	20.7%	18.4%	16.1%	13.8%	11.5%	9.2%	6.9%	4.6%	2.3%	Free
5212.22.60	5.8%	3.9%	1.9%	Free	Free	Free	Free	Free	Free	Free
5212.23.10	20.7%	18.4%	16.1%	13.8%	11.5%	9.2%	6.9%	4.6%	2.3%	Free
5212.23.60	5.8%	3.9%	1.9%	Free	Free	Free	Free	Free	Free	Free
5212.24.10	20.7%	18.4%	16.1%	13.8%	11.5%	9.2%	6.9%	4.6%	2.3%	Free
5212.24.60	5.8%	3.9%	1.9%	Free	Free	Free	Free	Free	Free	Free
5301.21.00	0.1¢/kg	Free	Free	Free	Free	Free	Free	Free	Free	Free
5301.29.00	1.9%	Free	Free	Free	Free	Free	Free	Free	Free	Free
5308.30.00	1.8%	Free	Free	Free	Free	Free	Free	Free	Free	Free
5309.21.20	14.9%	11.2%	7.4%	3.7%	Free	Free	Free	Free	Free	Free
5309.21.30	5.4%	3.6%	1.8%	Free	Free	Free	Free	Free	Free	Free
5309.29.20	14.9%	11.2%	7.4%	3.7%	Free	Free	Free	Free	Free	Free
5311.00.20	14.9%	11.2%	7.4%	3.7%	Free	Free	Free	Free	Free	Free
5311.00.60	1.8%	Free	Free	Free	Free	Free	Free	Free	Free	Free
5401.10.00	9.6%	7.2%	4.8%	2.4%	Free	Free	Free	Free	Free	Free
5401.20.00	9.6%	7.2%	4.8%	2.4%	Free	Free	Free	Free	Free	Free
5402.10.30	6.9%	4.6%	2.3%	Free	Free	Free	Free	Free	Free	Free
5402.10.60	6.3%	4.2%	2.1%	Free	Free	Free	Free	Free	Free	Free
5402.20.30	6.9%	4.6%	2.3%	Free	Free	Free	Free	Free	Free	Free
5402.20.60	6%	4%	2%	Free	Free	Free	Free	Free	Free	Free

Annex II (continued)
-99-

HTS Subheading	December 17, 2001	2002	2003	2004	2005	2006	2007	2008	2009	2010
5402.31.30	6.9%	4.6%	2.3%	Free	Free	Free	Free	Free	Free	Free
5402.31.60	6.3%	4.2%	2.1%	Free	Free	Free	Free	Free	Free	Free
5402.32.30	6.6%	4.4%	2.2%	Free	Free	Free	Free	Free	Free	Free
5402.32.60	6.3%	4.2%	2.1%	Free	Free	Free	Free	Free	Free	Free
5402.33.30	6.9%	4.6%	2.3%	Free	Free	Free	Free	Free	Free	Free
5402.33.60	6.3%	4.2%	2.1%	Free	Free	Free	Free	Free	Free	Free
5402.39.30	6.9%	4.6%	2.3%	Free	Free	Free	Free	Free	Free	Free
5402.39.60	6.3%	4.2%	2.1%	Free	Free	Free	Free	Free	Free	Free
5402.41.90	6.6%	4.4%	2.2%	Free	Free	Free	Free	Free	Free	Free
5402.42.00	6.9%	4.6%	2.3%	Free	Free	Free	Free	Free	Free	Free
5402.43.10	6.6%	4.4%	2.2%	Free	Free	Free	Free	Free	Free	Free
5402.43.90	6.6%	4.4%	2.2%	Free	Free	Free	Free	Free	Free	Free
5402.49.90	6.6%	4.4%	2.2%	Free	Free	Free	Free	Free	Free	Free
5402.51.00	6.9%	4.6%	2.3%	Free	Free	Free	Free	Free	Free	Free
5402.52.10	6.9%	4.6%	2.3%	Free	Free	Free	Free	Free	Free	Free
5402.52.90	6.9%	4.6%	2.3%	Free	Free	Free	Free	Free	Free	Free
5402.59.00	6.6%	4.4%	2.2%	Free	Free	Free	Free	Free	Free	Free
5402.61.00	6%	4%	2%	Free	Free	Free	Free	Free	Free	Free
5402.62.00	6%	4%	2%	Free	Free	Free	Free	Free	Free	Free
5402.69.00	6%	4%	2%	Free	Free	Free	Free	Free	Free	Free
5403.10.30	7.5%	5%	2.5%	Free	Free	Free	Free	Free	Free	Free
5403.10.60	6.8%	4.5%	2.2%	Free	Free	Free	Free	Free	Free	Free
5403.20.30	7.5%	5%	2.5%	Free	Free	Free	Free	Free	Free	Free
5403.20.60	6.8%	4.5%	2.2%	Free	Free	Free	Free	Free	Free	Free
5403.31.00	7.5%	5%	2.5%	Free	Free	Free	Free	Free	Free	Free
5403.32.00	7.5%	5%	2.5%	Free	Free	Free	Free	Free	Free	Free
5403.33.00	6.9%	4.6%	2.3%	Free	Free	Free	Free	Free	Free	Free
5403.39.00	6.6%	4.4%	2.2%	Free	Free	Free	Free	Free	Free	Free
5403.41.00	6.8%	4.5%	2.2%	Free	Free	Free	Free	Free	Free	Free
5403.42.00	6.3%	4.2%	2.1%	Free	Free	Free	Free	Free	Free	Free
5403.49.00	6%	4%	2%	Free	Free	Free	Free	Free	Free	Free

Annex II (continued)
-100-

HTS Subheading	December 17, 2001	2002	2003	2004	2005	2006	2007	2008	2009	2010
5404.10.10	1.4%	Free	Free	Free	Free	Free	Free	Free	Free	Free
5404.10.40	5.4%	3.6%	1.8%	Free	Free	Free	Free	Free	Free	Free
5404.10.80	5.4%	3.6%	1.8%	Free	Free	Free	Free	Free	Free	Free
5405.00.30	5.4%	3.6%	1.8%	Free	Free	Free	Free	Free	Free	Free
5405.00.60	4.5%	3%	1.5%	Free	Free	Free	Free	Free	Free	Free
5406.10.00	7.2%	4.8%	2.4%	Free	Free	Free	Free	Free	Free	Free
5406.20.00	7.2%	4.8%	2.4%	Free	Free	Free	Free	Free	Free	Free
5407.10.00	12%	9%	6%	3%	Free	Free	Free	Free	Free	Free
5407.30.90	8.9%	6.7%	4.4%	2.2%	Free	Free	Free	Free	Free	Free
5407.41.00	12%	9%	6%	3%	Free	Free	Free	Free	Free	Free
5407.42.00	12.5%	9.4%	6.2%	3.1%	Free	Free	Free	Free	Free	Free
5407.43.10	13.6¢/kg + 12.6%	10.2¢/kg + 9.4%	6.8¢/kg + 6.3%	3.4¢/kg + 3.1%	Free	Free	Free	Free	Free	Free
5407.43.20	9.5%	7.1%	4.7%	2.3%	Free	Free	Free	Free	Free	Free
5407.44.00	11.2%	8.4%	5.6%	2.8%	Free	Free	Free	Free	Free	Free
5407.51.00	12.5%	9.4%	6.2%	3.1%	Free	Free	Free	Free	Free	Free
5407.52.05	18.9¢/kg + 17.6%	16.8¢/kg + 15.6%	14.7¢/kg + 13.7%	12.6¢/kg + 11.7%	10.5¢/kg + 9.8%	8.4¢/kg + 7.8%	6.3¢/kg + 5.8%	4.2¢/kg + 3.9%	2.1¢/kg + 1.9%	Free
5407.52.20	12.5%	9.4%	6.2%	3.1%	Free	Free	Free	Free	Free	Free
5407.53.10	16.8¢/kg + 15.5%	12.6¢/kg + 11.6%	8.4¢/kg + 7.7%	4.2¢/kg + 3.8%	Free	Free	Free	Free	Free	Free
5407.53.20	11.2%	8.4%	5.6%	2.8%	Free	Free	Free	Free	Free	Free
5407.54.00	12.5%	9.4%	6.2%	3.1%	Free	Free	Free	Free	Free	Free
5407.61.11	19.2¢/kg + 17.8%	17.1¢/kg + 15.8%	14.9¢/kg + 13.8%	12.8¢/kg + 11.8%	10.7¢/kg + 9.9%	8.5¢/kg + 7.9%	6.4¢/kg + 5.9%	4.2¢/kg + 3.9%	2.1¢/kg + 1.9%	Free
5407.61.19	19.2¢/kg + 17.8%	17.1¢/kg + 15.8%	14.9¢/kg + 13.8%	12.8¢/kg + 11.8%	10.7¢/kg + 9.9%	8.5¢/kg + 7.9%	6.4¢/kg + 5.9%	4.2¢/kg + 3.9%	2.1¢/kg + 1.9%	Free
5407.61.21	13.6¢/kg + 12.6%	10.2¢/kg + 9.4%	6.8¢/kg + 6.3%	3.4¢/kg + 3.1%	Free	Free	Free	Free	Free	Free
5407.61.29	13.6¢/kg + 12.6%	10.2¢/kg + 9.4%	6.8¢/kg + 6.3%	3.4¢/kg + 3.1%	Free	Free	Free	Free	Free	Free
5407.61.91	12.5%	9.4%	6.2%	3.1%	Free	Free	Free	Free	Free	Free
5407.61.99	12.5%	9.4%	6.2%	3.1%	Free	Free	Free	Free	Free	Free

Annex II (continued)
-101-

HTS Subheading	December 17, 2001	2002	2003	2004	2005	2006	2007	2008	2009	2010
5407.69.10	12.5%	9.4%	6.2%	3.1%	Free	Free	Free	Free	Free	Free
5407.69.20	12.5%	9.4%	6.2%	3.1%	Free	Free	Free	Free	Free	Free
5407.69.40	9.5%	7.1%	4.7%	2.3%	Free	Free	Free	Free	Free	Free
5407.69.90	12.5%	9.4%	6.2%	3.1%	Free	Free	Free	Free	Free	Free
5407.71.00	12.5%	9.4%	6.2%	3.1%	Free	Free	Free	Free	Free	Free
5407.72.00	12.5%	9.4%	6.2%	3.1%	Free	Free	Free	Free	Free	Free
5407.73.20	9.5%	7.1%	4.7%	2.3%	Free	Free	Free	Free	Free	Free
5407.74.00	12.5%	9.4%	6.2%	3.1%	Free	Free	Free	Free	Free	Free
5407.81.00	12.5%	9.4%	6.2%	3.1%	Free	Free	Free	Free	Free	Free
5407.82.00	12.5%	9.4%	6.2%	3.1%	Free	Free	Free	Free	Free	Free
5407.83.00	9.5%	7.1%	4.7%	2.3%	Free	Free	Free	Free	Free	Free
5407.84.00	12.5%	9.4%	6.2%	3.1%	Free	Free	Free	Free	Free	Free
5407.91.05	17.4¢/kg + 27.1%	15.5¢/kg + 24.1%	13.5¢/kg + 21.1%	11.6¢/kg + 18.1%	9.7¢/kg + 15.1%	7.7¢/kg + 12%	5.8¢/kg + 9%	3.8¢/kg + 6%	1.9¢/kg + 3%	Free
5407.91.10	10.3%	7.7%	5.1%	2.5%	Free	Free	Free	Free	Free	Free
5407.91.20	12.5%	9.4%	6.2%	3.1%	Free	Free	Free	Free	Free	Free
5407.92.05	17.4¢/kg + 27.1%	15.5¢/kg + 24.1%	13.5¢/kg + 21.1%	11.6¢/kg + 18.1%	9.7¢/kg + 15.1%	7.7¢/kg + 12%	5.8¢/kg + 9%	3.8¢/kg + 6%	1.9¢/kg + 3%	Free
5407.92.10	10.3%	7.7%	5.1%	2.5%	Free	Free	Free	Free	Free	Free
5407.92.20	12.5%	9.4%	6.2%	3.1%	Free	Free	Free	Free	Free	Free
5407.93.05	17.4¢/kg + 27.1%	15.5¢/kg + 24.1%	13.5¢/kg + 21.1%	11.6¢/kg + 18.1%	9.7¢/kg + 15.1%	7.7¢/kg + 12%	5.8¢/kg + 9%	3.8¢/kg + 6%	1.9¢/kg + 3%	Free
5407.93.10	10.3%	7.7%	5.1%	2.5%	Free	Free	Free	Free	Free	Free
5407.93.20	11.2%	8.4%	5.6%	2.8%	Free	Free	Free	Free	Free	Free
5407.94.10	10.3%	7.7%	5.1%	2.5%	Free	Free	Free	Free	Free	Free
5407.94.20	12.5%	9.4%	6.2%	3.1%	Free	Free	Free	Free	Free	Free
5408.10.00	12.5%	9.4%	6.2%	3.1%	Free	Free	Free	Free	Free	Free
5408.21.00	12.5%	9.4%	6.2%	3.1%	Free	Free	Free	Free	Free	Free
5408.22.10	12.5%	9.4%	6.2%	3.1%	Free	Free	Free	Free	Free	Free
5408.22.90	12.5%	9.4%	6.2%	3.1%	Free	Free	Free	Free	Free	Free
5408.23.21	11.2%	8.4%	5.6%	2.8%	Free	Free	Free	Free	Free	Free
5408.23.29	11.2%	8.4%	5.6%	2.8%	Free	Free	Free	Free	Free	Free

Annex II (continued)
-102-

HTS Subheading	December 17, 2001	2002	2003	2004	2005	2006	2007	2008	2009	2010
5408.24.10	11.2%	8.4%	5.6%	2.8%	Free	Free	Free	Free	Free	Free
5408.24.90	11.2%	8.4%	5.6%	2.8%	Free	Free	Free	Free	Free	Free
5408.31.05	17.4¢/kg + 27.1%	15.5¢/kg + 24.1%	13.5¢/kg + 21.1%	11.6¢/kg + 18.1%	9.7¢/kg + 15.1%	7.7¢/kg + 12%	5.8¢/kg + 9%	3.8¢/kg + 6%	1.9¢/kg + 3%	Free
5408.31.10	10.3%	7.7%	5.1%	2.5%	Free	Free	Free	Free	Free	Free
5408.31.20	12.5%	9.4%	6.2%	3.1%	Free	Free	Free	Free	Free	Free
5408.32.05	17.4¢/kg + 24.3%	15.5¢/kg + 21.6%	13.5¢/kg + 18.9%	11.6¢/kg + 16.2%	9.7¢/kg + 13.5%	7.7¢/kg + 10.8%	5.8¢/kg + 8.1%	3.8¢/kg + 5.4%	1.9¢/kg + 2.7%	Free
5408.32.10	10.3%	7.7%	5.1%	2.5%	Free	Free	Free	Free	Free	Free
5408.32.30	5.4%	3.6%	1.8%	Free	Free	Free	Free	Free	Free	Free
5408.32.90	12.6%	9.4%	6.3%	3.1%	Free	Free	Free	Free	Free	Free
5408.33.05	17.4¢/kg + 24.3%	15.5¢/kg + 21.6%	13.5¢/kg + 18.9%	11.6¢/kg + 16.2%	9.7¢/kg + 13.5%	7.7¢/kg + 10.8%	5.8¢/kg + 8.1%	3.8¢/kg + 5.4%	1.9¢/kg + 2.7%	Free
5408.33.10	10.3%	7.7%	5.1%	2.5%	Free	Free	Free	Free	Free	Free
5408.33.15	13.6¢/kg + 12.6%	10.2¢/kg + 9.4%	6.8¢/kg + 6.3%	3.4¢/kg + 3.1%	Free	Free	Free	Free	Free	Free
5408.33.30	5.4%	3.6%	1.8%	Free	Free	Free	Free	Free	Free	Free
5408.33.90	11.2%	8.4%	5.6%	2.8%	Free	Free	Free	Free	Free	Free
5408.34.10	10.3%	7.7%	5.1%	2.5%	Free	Free	Free	Free	Free	Free
5408.34.90	11.2%	8.4%	5.6%	2.8%	Free	Free	Free	Free	Free	Free
5501.10.00	6.3%	4.2%	2.1%	Free	Free	Free	Free	Free	Free	Free
5501.20.00	6.3%	4.2%	2.1%	Free	Free	Free	Free	Free	Free	Free
5501.30.00	6.3%	4.2%	2.1%	Free	Free	Free	Free	Free	Free	Free
5501.90.00	6.3%	4.2%	2.1%	Free	Free	Free	Free	Free	Free	Free
5502.00.00	6.3%	4.2%	2.1%	Free	Free	Free	Free	Free	Free	Free
5503.10.90	2.2%	Free	Free	Free	Free	Free	Free	Free	Free	Free
5503.20.00	2.2%	Free	Free	Free	Free	Free	Free	Free	Free	Free
5503.30.00	2.2%	Free	Free	Free	Free	Free	Free	Free	Free	Free
5503.40.00	2.2%	Free	Free	Free	Free	Free	Free	Free	Free	Free
5503.90.90	2.2%	Free	Free	Free	Free	Free	Free	Free	Free	Free
5504.10.00	2.2%	Free	Free	Free	Free	Free	Free	Free	Free	Free
5504.90.00	2.2%	Free	Free	Free	Free	Free	Free	Free	Free	Free

Annex II (continued)
-103-

HTS Subheading	December 17, 2001	2002	2003	2004	2005	2006	2007	2008	2009	2010
5506.10.00	4.2%	2.8%	1.4%	Free	Free	Free	Free	Free	Free	Free
5506.20.00	4.5%	3%	1.5%	Free	Free	Free	Free	Free	Free	Free
5506.30.00	4.2%	2.8%	1.4%	Free	Free	Free	Free	Free	Free	Free
5506.90.00	4.2%	2.8%	1.4%	Free	Free	Free	Free	Free	Free	Free
5507.00.00	4.2%	2.8%	1.4%	Free	Free	Free	Free	Free	Free	Free
5508.10.00	9.6%	7.2%	4.8%	2.4%	Free	Free	Free	Free	Free	Free
5508.20.00	9.4%	7%	4.7%	2.3%	Free	Free	Free	Free	Free	Free
5509.11.00	7.5%	5%	2.5%	Free	Free	Free	Free	Free	Free	Free
5509.12.00	8.9%	6.7%	4.4%	2.2%	Free	Free	Free	Free	Free	Free
5509.21.00	8.1%	6.1%	4%	2%	Free	Free	Free	Free	Free	Free
5509.22.00	8.9%	6.7%	4.4%	2.2%	Free	Free	Free	Free	Free	Free
5509.31.00	7.3%	4.9%	2.4%	Free	Free	Free	Free	Free	Free	Free
5509.32.00	8.6%	6.4%	4.3%	2.1%	Free	Free	Free	Free	Free	Free
5509.41.00	7.3%	4.9%	2.4%	Free	Free	Free	Free	Free	Free	Free
5509.42.00	6.7%	4.5%	2.2%	Free	Free	Free	Free	Free	Free	Free
5509.51.30	8.1%	6.1%	4%	2%	Free	Free	Free	Free	Free	Free
5509.51.60	8.9%	6.7%	4.4%	2.2%	Free	Free	Free	Free	Free	Free
5509.52.00	10.5%	7.9%	5.2%	2.6%	Free	Free	Free	Free	Free	Free
5509.53.00	11.1%	8.3%	5.5%	2.7%	Free	Free	Free	Free	Free	Free
5509.59.00	11.1%	8.3%	5.5%	2.7%	Free	Free	Free	Free	Free	Free
5509.61.00	11.1%	8.3%	5.5%	2.7%	Free	Free	Free	Free	Free	Free
5509.62.00	10.5%	7.9%	5.2%	2.6%	Free	Free	Free	Free	Free	Free
5509.69.20	7.3%	4.9%	2.4%	Free	Free	Free	Free	Free	Free	Free
5509.69.40	8.6%	6.4%	4.3%	2.1%	Free	Free	Free	Free	Free	Free
5509.69.60	11.1%	8.3%	5.5%	2.7%	Free	Free	Free	Free	Free	Free
5509.91.00	10.5%	7.9%	5.2%	2.6%	Free	Free	Free	Free	Free	Free
5509.92.00	8.4%	6.3%	4.2%	2.1%	Free	Free	Free	Free	Free	Free
5509.99.20	7.3%	4.9%	2.4%	Free	Free	Free	Free	Free	Free	Free
5509.99.40	8.9%	6.7%	4.4%	2.2%	Free	Free	Free	Free	Free	Free
5509.99.60	11.1%	8.3%	5.5%	2.7%	Free	Free	Free	Free	Free	Free
5510.11.00	7.3%	4.9%	2.4%	Free	Free	Free	Free	Free	Free	Free

Annex II (continued)
-104-

HTS Subheading	December 17, 2001	2002	2003	2004	2005	2006	2007	2008	2009	2010
5510.12.00	8.9%	6.7%	4.4%	2.2%	Free	Free	Free	Free	Free	Free
5510.20.00	9.6%	7.2%	4.8%	2.4%	Free	Free	Free	Free	Free	Free
5510.30.00	8.4%	6.3%	4.2%	2.1%	Free	Free	Free	Free	Free	Free
5510.90.20	7.3%	4.9%	2.4%	Free	Free	Free	Free	Free	Free	Free
5510.90.40	8.9%	6.7%	4.4%	2.2%	Free	Free	Free	Free	Free	Free
5510.90.60	11.1%	8.3%	5.5%	2.7%	Free	Free	Free	Free	Free	Free
5511.10.00	7.2%	4.8%	2.4%	Free	Free	Free	Free	Free	Free	Free
5511.20.00	7.2%	4.8%	2.4%	Free	Free	Free	Free	Free	Free	Free
5511.30.00	7.2%	4.8%	2.4%	Free	Free	Free	Free	Free	Free	Free
5512.11.00	11.2%	8.4%	5.6%	2.8%	Free	Free	Free	Free	Free	Free
5512.19.00	12%	9%	6%	3%	Free	Free	Free	Free	Free	Free
5512.21.00	11.2%	8.4%	5.6%	2.8%	Free	Free	Free	Free	Free	Free
5512.29.00	11.2%	8.4%	5.6%	2.8%	Free	Free	Free	Free	Free	Free
5512.91.00	12.5%	9.4%	6.2%	3.1%	Free	Free	Free	Free	Free	Free
5512.99.00	11.2%	8.4%	5.6%	2.8%	Free	Free	Free	Free	Free	Free
5513.11.00	12.5%	9.4%	6.2%	3.1%	Free	Free	Free	Free	Free	Free
5513.12.00	12.5%	9.4%	6.2%	3.1%	Free	Free	Free	Free	Free	Free
5513.13.00	12.5%	9.4%	6.2%	3.1%	Free	Free	Free	Free	Free	Free
5513.19.00	12.5%	9.4%	6.2%	3.1%	Free	Free	Free	Free	Free	Free
5513.21.00	12.5%	9.4%	6.2%	3.1%	Free	Free	Free	Free	Free	Free
5513.22.00	12.5%	9.4%	6.2%	3.1%	Free	Free	Free	Free	Free	Free
5513.23.00	12.5%	9.4%	6.2%	3.1%	Free	Free	Free	Free	Free	Free
5513.29.00	12.5%	9.4%	6.2%	3.1%	Free	Free	Free	Free	Free	Free
5513.31.00	12.5%	9.4%	6.2%	3.1%	Free	Free	Free	Free	Free	Free
5513.32.00	12.5%	9.4%	6.2%	3.1%	Free	Free	Free	Free	Free	Free
5513.33.00	12.5%	9.4%	6.2%	3.1%	Free	Free	Free	Free	Free	Free
5513.39.00	12.5%	9.4%	6.2%	3.1%	Free	Free	Free	Free	Free	Free
5513.41.00	12.5%	9.4%	6.2%	3.1%	Free	Free	Free	Free	Free	Free
5513.42.00	12%	9%	6%	3%	Free	Free	Free	Free	Free	Free
5513.43.00	12.5%	9.4%	6.2%	3.1%	Free	Free	Free	Free	Free	Free
5513.49.00	9.5%	7.1%	4.7%	2.3%	Free	Free	Free	Free	Free	Free

Annex II (continued)
-105-

HTS Subheading	December 17, 2001	2002	2003	2004	2005	2006	2007	2008	2009	2010
5514.11.00	12.5%	9.4%	6.2%	3.1%	Free	Free	Free	Free	Free	Free
5514.12.00	12.5%	9.4%	6.2%	3.1%	Free	Free	Free	Free	Free	Free
5514.13.00	12.5%	9.4%	6.2%	3.1%	Free	Free	Free	Free	Free	Free
5514.19.00	9.5%	7.1%	4.7%	2.3%	Free	Free	Free	Free	Free	Free
5514.21.00	12.5%	9.4%	6.2%	3.1%	Free	Free	Free	Free	Free	Free
5514.22.00	12.5%	9.4%	6.2%	3.1%	Free	Free	Free	Free	Free	Free
5514.23.00	12.5%	9.4%	6.2%	3.1%	Free	Free	Free	Free	Free	Free
5514.29.00	11.2%	8.4%	5.6%	2.8%	Free	Free	Free	Free	Free	Free
5514.31.00	12.5%	9.4%	6.2%	3.1%	Free	Free	Free	Free	Free	Free
5514.32.00	12.5%	9.4%	6.2%	3.1%	Free	Free	Free	Free	Free	Free
5514.33.00	11.2%	8.4%	5.6%	2.8%	Free	Free	Free	Free	Free	Free
5514.41.00	12.5%	9.4%	6.2%	3.1%	Free	Free	Free	Free	Free	Free
5514.42.00	12.5%	9.4%	6.2%	3.1%	Free	Free	Free	Free	Free	Free
5514.49.00	9.5%	7.1%	4.7%	2.3%	Free	Free	Free	Free	Free	Free
5515.11.00	12.5%	9.4%	6.2%	3.1%	Free	Free	Free	Free	Free	Free
5515.12.00	11.2%	8.4%	5.6%	2.8%	Free	Free	Free	Free	Free	Free
5515.13.05	17.4¢/kg + 27.1%	15.5¢/kg + 24.1%	13.5¢/kg + 21.1%	11.6¢/kg + 18.1%	9.7¢/kg + 15.1%	7.7¢/kg + 12%	5.8¢/kg + 9%	3.8¢/kg + 6%	1.9¢/kg + 3%	Free
5515.13.10	10.3%	7.7%	5.1%	2.5%	Free	Free	Free	Free	Free	Free
5515.19.00	11.2%	8.4%	5.6%	2.8%	Free	Free	Free	Free	Free	Free
5515.22.05	17.4¢/kg + 24.5%	15.5¢/kg + 21.8%	13.5¢/kg + 19.1%	11.6¢/kg + 16.3%	9.7¢/kg + 13.6%	7.7¢/kg + 10.9%	5.8¢/kg + 8.1%	3.8¢/kg + 5.4%	1.9¢/kg + 2.7%	Free
5515.22.10	10.3%	7.7%	5.1%	2.5%	Free	Free	Free	Free	Free	Free
5515.91.00	11.2%	8.4%	5.6%	2.8%	Free	Free	Free	Free	Free	Free
5515.92.05	17.4¢/kg + 27.1%	15.5¢/kg + 24.1%	13.5¢/kg + 21.1%	11.6¢/kg + 18.1%	9.7¢/kg + 15.1%	7.7¢/kg + 12%	5.8¢/kg + 9%	3.8¢/kg + 6%	1.9¢/kg + 3%	Free
5515.92.10	10.3%	7.7%	5.1%	2.5%	Free	Free	Free	Free	Free	Free
5515.99.00	9.5%	7.1%	4.7%	2.3%	Free	Free	Free	Free	Free	Free
5516.11.00	12.5%	9.4%	6.2%	3.1%	Free	Free	Free	Free	Free	Free
5516.12.00	12.5%	9.4%	6.2%	3.1%	Free	Free	Free	Free	Free	Free
5516.13.00	12.5%	9.4%	6.2%	3.1%	Free	Free	Free	Free	Free	Free
5516.14.00	10.2%	7.6%	5.1%	2.5%	Free	Free	Free	Free	Free	Free

Annex II (continued)
-106-

HTS Subheading	December 17, 2001	2002	2003	2004	2005	2006	2007	2008	2009	2010
5516.21.00	12.5%	9.4%	6.2%	3.1%	Free	Free	Free	Free	Free	Free
5516.22.00	12.5%	9.4%	6.2%	3.1%	Free	Free	Free	Free	Free	Free
5516.23.00	9.5%	7.1%	4.7%	2.3%	Free	Free	Free	Free	Free	Free
5516.24.00	12.5%	9.4%	6.2%	3.1%	Free	Free	Free	Free	Free	Free
5516.31.05	17.4¢/kg + 24.3%	15.5¢/kg + 21.6%	13.5¢/kg + 18.9%	11.6¢/kg + 16.2%	9.7¢/kg + 13.5%	7.7¢/kg + 10.8%	5.8¢/kg + 8.1%	3.8¢/kg + 5.4%	1.9¢/kg + 2.7%	Free
5516.31.10	10.3%	7.7%	5.1%	2.5%	Free	Free	Free	Free	Free	Free
5516.32.05	17.4¢/kg + 27.1%	15.5¢/kg + 24.1%	13.5¢/kg + 21.1%	11.6¢/kg + 18.1%	9.7¢/kg + 15.1%	7.7¢/kg + 12%	5.8¢/kg + 9%	3.8¢/kg + 6%	1.9¢/kg + 3%	Free
5516.32.10	10.3%	7.7%	5.1%	2.5%	Free	Free	Free	Free	Free	Free
5516.33.05	17.4¢/kg + 27.1%	15.5¢/kg + 24.1%	13.5¢/kg + 21.1%	11.6¢/kg + 18.1%	9.7¢/kg + 15.1%	7.7¢/kg + 12%	5.8¢/kg + 9%	3.8¢/kg + 6%	1.9¢/kg + 3%	Free
5516.33.10	10.3%	7.7%	5.1%	2.5%	Free	Free	Free	Free	Free	Free
5516.34.05	17.4¢/kg + 24.3%	15.5¢/kg + 21.6%	13.5¢/kg + 18.9%	11.6¢/kg + 16.2%	9.7¢/kg + 13.5%	7.7¢/kg + 10.8%	5.8¢/kg + 8.1%	3.8¢/kg + 5.4%	1.9¢/kg + 2.7%	Free
5516.34.10	10.3%	7.7%	5.1%	2.5%	Free	Free	Free	Free	Free	Free
5516.41.00	12.5%	9.4%	6.2%	3.1%	Free	Free	Free	Free	Free	Free
5516.42.00	11.2%	8.4%	5.6%	2.8%	Free	Free	Free	Free	Free	Free
5516.44.00	9.5%	7.1%	4.7%	2.3%	Free	Free	Free	Free	Free	Free
5516.91.00	11.2%	8.4%	5.6%	2.8%	Free	Free	Free	Free	Free	Free
5516.92.00	11.2%	8.4%	5.6%	2.8%	Free	Free	Free	Free	Free	Free
5516.93.00	9.5%	7.1%	4.7%	2.3%	Free	Free	Free	Free	Free	Free
5516.94.00	11.2%	8.4%	5.6%	2.8%	Free	Free	Free	Free	Free	Free
5601.10.10	2.5%	Free	Free	Free	Free	Free	Free	Free	Free	Free
5601.10.20	6.6%	4.4%	2.2%	Free	Free	Free	Free	Free	Free	Free
5601.21.00	2.5%	Free	Free	Free	Free	Free	Free	Free	Free	Free
5601.22.00	6.6%	4.4%	2.2%	Free	Free	Free	Free	Free	Free	Free
5601.29.00	4.2%	2.8%	1.4%	Free	Free	Free	Free	Free	Free	Free
5602.10.10	10.8%	8.1%	5.4%	2.7%	Free	Free	Free	Free	Free	Free
5602.10.90	9.1%	6.8%	4.5%	2.2%	Free	Free	Free	Free	Free	Free
5602.21.00	44.8¢/kg + 6.8%	33.6¢/kg + 5.1%	22.4¢/kg + 3.4%	11.2¢/kg + 1.7%	Free	Free	Free	Free	Free	Free
5602.29.00	6.6%	4.4%	2.2%	Free	Free	Free	Free	Free	Free	Free

Annex II (continued)
-107-

HTS Subheading	December 17, 2001	2002	2003	2004	2005	2006	2007	2008	2009	2010
5602.90.60	6.6%	4.4%	2.2%	Free	Free	Free	Free	Free	Free	Free
5602.90.90	46.5¢/kg + 7%	34.9¢/kg + 5.2%	23.2¢/kg + 3.5%	11.6¢/kg + 1.7%	Free	Free	Free	Free	Free	Free
5604.10.00	5%	3.3%	1.6%	Free	Free	Free	Free	Free	Free	Free
5604.20.00	6.9%	4.6%	2.3%	Free	Free	Free	Free	Free	Free	Free
5604.90.00	5.2%	3.5%	1.7%	Free	Free	Free	Free	Free	Free	Free
5605.00.10	8.4%	6.3%	4.2%	2.1%	Free	Free	Free	Free	Free	Free
5605.00.90	11.1%	8.3%	5.5%	2.7%	Free	Free	Free	Free	Free	Free
5606.00.00	7%	4.7%	2.3%	Free	Free	Free	Free	Free	Free	Free
5607.29.00	2.5%	Free	Free	Free	Free	Free	Free	Free	Free	Free
5607.30.20	2.4%	Free	Free	Free	Free	Free	Free	Free	Free	Free
5607.41.10	1.8%	Free	Free	Free	Free	Free	Free	Free	Free	Free
5607.41.30	4.2%	2.8%	1.4%	Free	Free	Free	Free	Free	Free	Free
5607.49.10	1.8%	Free	Free	Free	Free	Free	Free	Free	Free	Free
5607.49.15	5.5%	3.7%	1.8%	Free	Free	Free	Free	Free	Free	Free
5607.49.25	13.5¢/kg + 7.3%	10.1¢/kg + 5.5%	6.7¢/kg + 3.6%	3.3¢/kg + 1.8%	Free	Free	Free	Free	Free	Free
5607.49.30	2.5%	Free	Free	Free	Free	Free	Free	Free	Free	Free
5607.50.25	5.5%	3.7%	1.8%	Free	Free	Free	Free	Free	Free	Free
5607.50.35	18.4¢/kg + 10%	13.8¢/kg + 7.5%	9.2¢/kg + 5%	4.6¢/kg + 2.5%	Free	Free	Free	Free	Free	Free
5607.50.40	2.5%	Free	Free	Free	Free	Free	Free	Free	Free	Free
5607.90.20	5%	3.3%	1.6%	Free	Free	Free	Free	Free	Free	Free
5608.11.00	9.2%	6.9%	4.6%	2.3%	Free	Free	Free	Free	Free	Free
5608.19.10	9.5%	7.1%	4.7%	2.3%	Free	Free	Free	Free	Free	Free
5608.19.20	5.2%	3.5%	1.7%	Free	Free	Free	Free	Free	Free	Free
5608.90.10	9.2%	6.9%	4.6%	2.3%	Free	Free	Free	Free	Free	Free
5608.90.23	11.9%	8.9%	5.9%	2.9%	Free	Free	Free	Free	Free	Free
5608.90.27	11.9%	8.9%	5.9%	2.9%	Free	Free	Free	Free	Free	Free
5608.90.30	5.2%	3.5%	1.7%	Free	Free	Free	Free	Free	Free	Free
5609.00.10	2%	Free	Free	Free	Free	Free	Free	Free	Free	Free
5609.00.30	4.7%	3.1%	1.5%	Free	Free	Free	Free	Free	Free	Free

Annex II (continued)
-108-

HTS Subheading	December 17, 2001	2002	2003	2004	2005	2006	2007	2008	2009	2010
5609.00.40	4.1%	2.7%	1.3%	Free	Free	Free	Free	Free	Free	Free
5701.10.90	2.3%	Free	Free	Free	Free	Free	Free	Free	Free	Free
5702.31.10	6.6%	4.4%	2.2%	Free	Free	Free	Free	Free	Free	Free
5702.31.20	4.2%	2.8%	1.4%	Free	Free	Free	Free	Free	Free	Free
5702.32.10	6.6%	4.4%	2.2%	Free	Free	Free	Free	Free	Free	Free
5702.32.20	5.5%	3.7%	1.8%	Free	Free	Free	Free	Free	Free	Free
5702.39.20	2.5%	Free	Free	Free	Free	Free	Free	Free	Free	Free
5702.49.20	4.2%	2.8%	1.4%	Free	Free	Free	Free	Free	Free	Free
5702.51.20	2.2%	Free	Free	Free	Free	Free	Free	Free	Free	Free
5702.51.40	5%	3.3%	1.6%	Free	Free	Free	Free	Free	Free	Free
5702.52.00	2.4%	Free	Free	Free	Free	Free	Free	Free	Free	Free
5702.59.10	5.4%	3.6%	1.8%	Free	Free	Free	Free	Free	Free	Free
5702.59.20	1.8%	Free	Free	Free	Free	Free	Free	Free	Free	Free
5702.91.30	2.2%	Free	Free	Free	Free	Free	Free	Free	Free	Free
5702.91.40	2.5%	Free	Free	Free	Free	Free	Free	Free	Free	Free
5702.92.00	1.8%	Free	Free	Free	Free	Free	Free	Free	Free	Free
5702.99.10	5.4%	3.6%	1.8%	Free	Free	Free	Free	Free	Free	Free
5702.99.20	1.8%	Free	Free	Free	Free	Free	Free	Free	Free	Free
5703.10.00	4.8%	3.2%	1.6%	Free	Free	Free	Free	Free	Free	Free
5703.20.10	4.5%	3%	1.5%	Free	Free	Free	Free	Free	Free	Free
5703.20.20	5.3%	3.5%	1.7%	Free	Free	Free	Free	Free	Free	Free
5703.30.00	4.9%	3.3%	1.6%	Free	Free	Free	Free	Free	Free	Free
5703.90.00	3.9%	2.6%	1.3%	Free	Free	Free	Free	Free	Free	Free
5704.10.00	2.4%	Free	Free	Free	Free	Free	Free	Free	Free	Free
5705.00.20	2.3%	Free	Free	Free	Free	Free	Free	Free	Free	Free
5801.21.00	19.1%	17%	14.9%	12.7%	10.6%	8.5%	6.3%	4.2%	2.1%	Free
5801.22.10	12.1%	9.1%	6%	3%	Free	Free	Free	Free	Free	Free
5801.22.90	19.1%	17%	14.9%	12.7%	10.6%	8.5%	6.3%	4.2%	2.1%	Free
5801.23.00	11.2%	8.4%	5.6%	2.8%	Free	Free	Free	Free	Free	Free
5801.24.00	11.7%	8.8%	5.8%	2.9%	Free	Free	Free	Free	Free	Free
5801.25.00	15.6%	11.7%	7.8%	3.9%	Free	Free	Free	Free	Free	Free

Annex II (continued)
-109-

HTS Subheading	December 17, 2001	2002	2003	2004	2005	2006	2007	2008	2009	2010
5801.31.00	14.4%	10.8%	7.2%	3.6%	Free	Free	Free	Free	Free	Free
5801.32.00	12.9%	9.7%	6.4%	3.2%	Free	Free	Free	Free	Free	Free
5801.33.00	10.9%	8.2%	5.4%	2.7%	Free	Free	Free	Free	Free	Free
5801.34.00	12.9%	9.7%	6.4%	3.2%	Free	Free	Free	Free	Free	Free
5801.35.00	14.4%	10.8%	7.2%	3.6%	Free	Free	Free	Free	Free	Free
5801.36.00	10.9%	8.2%	5.4%	2.7%	Free	Free	Free	Free	Free	Free
5801.90.10	1.9%	Free	Free	Free	Free	Free	Free	Free	Free	Free
5801.90.20	1.8%	Free	Free	Free	Free	Free	Free	Free	Free	Free
5802.11.00	8.2%	6.1%	4.1%	2%	Free	Free	Free	Free	Free	Free
5802.19.00	8%	6%	4%	2%	Free	Free	Free	Free	Free	Free
5802.20.00	12.9%	9.7%	6.4%	3.2%	Free	Free	Free	Free	Free	Free
5802.30.00	4.8%	3.2%	1.6%	Free	Free	Free	Free	Free	Free	Free
5803.90.11	5.2%	3.5%	1.7%	Free	Free	Free	Free	Free	Free	Free
5803.90.12	20.7%	18.4%	16.1%	13.8%	11.5%	9.2%	6.9%	4.6%	2.3%	Free
5804.10.10	6.3%	4.2%	2.1%	Free	Free	Free	Free	Free	Free	Free
5804.21.00	10.8%	8.1%	5.4%	2.7%	Free	Free	Free	Free	Free	Free
5804.29.10	6.6%	4.4%	2.2%	Free	Free	Free	Free	Free	Free	Free
5804.29.90	5.2%	3.5%	1.7%	Free	Free	Free	Free	Free	Free	Free
5804.30.00	11.1%	8.3%	5.5%	2.7%	Free	Free	Free	Free	Free	Free
5806.10.10	6.1%	4.1%	2%	Free	Free	Free	Free	Free	Free	Free
5806.10.24	5.2%	3.5%	1.7%	Free	Free	Free	Free	Free	Free	Free
5806.10.28	6.6%	4.4%	2.2%	Free	Free	Free	Free	Free	Free	Free
5806.10.30	3.9%	2.6%	1.3%	Free	Free	Free	Free	Free	Free	Free
5806.20.00	5.5%	3.7%	1.8%	Free	Free	Free	Free	Free	Free	Free
5806.31.00	6.9%	4.6%	2.3%	Free	Free	Free	Free	Free	Free	Free
5806.32.10	5.4%	3.6%	1.8%	Free	Free	Free	Free	Free	Free	Free
5806.32.20	4.8%	3.2%	1.6%	Free	Free	Free	Free	Free	Free	Free
5806.39.10	5.2%	3.5%	1.7%	Free	Free	Free	Free	Free	Free	Free
5806.39.20	3.9%	2.6%	1.3%	Free	Free	Free	Free	Free	Free	Free
5806.40.00	8.9%	6.7%	4.4%	2.2%	Free	Free	Free	Free	Free	Free
5807.10.05	6.2%	4.1%	2%	Free	Free	Free	Free	Free	Free	Free

Annex II (continued)
-110-

HTS Subheading	December 17, 2001	2002	2003	2004	2005	2006	2007	2008	2009	2010
5807.10.15	4.7%	3.1%	1.5%	Free	Free	Free	Free	Free	Free	Free
5807.10.20	2.3%	Free	Free	Free	Free	Free	Free	Free	Free	Free
5807.90.05	6.2%	4.1%	2%	Free	Free	Free	Free	Free	Free	Free
5807.90.15	4.7%	3.1%	1.5%	Free	Free	Free	Free	Free	Free	Free
5807.90.20	2.3%	Free	Free	Free	Free	Free	Free	Free	Free	Free
5808.10.40	1.7%	Free	Free	Free	Free	Free	Free	Free	Free	Free
5808.10.70	5.8%	3.9%	1.9%	Free	Free	Free	Free	Free	Free	Free
5808.10.90	4.4%	2.9%	1.4%	Free	Free	Free	Free	Free	Free	Free
5808.90.00	4.1%	2.7%	1.3%	Free	Free	Free	Free	Free	Free	Free
5809.00.00	12.5%	9.4%	6.2%	3.1%	Free	Free	Free	Free	Free	Free
5810.10.00	11.9%	8.9%	5.9%	2.9%	Free	Free	Free	Free	Free	Free
5811.00.10	11.1%	8.3%	5.5%	2.7%	Free	Free	Free	Free	Free	Free
5811.00.20	5%	3.3%	1.6%	Free	Free	Free	Free	Free	Free	Free
5811.00.30	8.9%	6.7%	4.4%	2.2%	Free	Free	Free	Free	Free	Free
5901.10.10	5.5%	3.7%	1.8%	Free	Free	Free	Free	Free	Free	Free
5901.10.20	2.1%	Free	Free	Free	Free	Free	Free	Free	Free	Free
5901.90.20	5.5%	3.7%	1.8%	Free	Free	Free	Free	Free	Free	Free
5901.90.40	2.1%	Free	Free	Free	Free	Free	Free	Free	Free	Free
5902.10.00	4.5%	3%	1.5%	Free	Free	Free	Free	Free	Free	Free
5902.20.00	4.5%	3%	1.5%	Free	Free	Free	Free	Free	Free	Free
5903.10.10	1.8%	Free	Free	Free	Free	Free	Free	Free	Free	Free
5903.10.18	11.9%	8.9%	5.9%	2.9%	Free	Free	Free	Free	Free	Free
5903.10.25	5.9%	3.9%	1.9%	Free	Free	Free	Free	Free	Free	Free
5903.10.30	1.8%	Free	Free	Free	Free	Free	Free	Free	Free	Free
5903.20.10	1.8%	Free	Free	Free	Free	Free	Free	Free	Free	Free
5903.20.18	8.9%	6.7%	4.4%	2.2%	Free	Free	Free	Free	Free	Free
5903.20.25	5.9%	3.9%	1.9%	Free	Free	Free	Free	Free	Free	Free
5903.20.30	1.8%	Free	Free	Free	Free	Free	Free	Free	Free	Free
5903.90.10	1.8%	Free	Free	Free	Free	Free	Free	Free	Free	Free
5903.90.18	8.9%	6.7%	4.4%	2.2%	Free	Free	Free	Free	Free	Free
5903.90.25	5.9%	3.9%	1.9%	Free	Free	Free	Free	Free	Free	Free

Annex II (continued)
-111-

HTS Subheading	December 17, 2001	2002	2003	2004	2005	2006	2007	2008	2009	2010
5903.90.30	1.8%	Free	Free	Free	Free	Free	Free	Free	Free	Free
5906.10.00	2%	Free	Free	Free	Free	Free	Free	Free	Free	Free
5906.91.10	1.8%	Free	Free	Free	Free	Free	Free	Free	Free	Free
5906.91.25	5.9%	3.9%	1.9%	Free	Free	Free	Free	Free	Free	Free
5906.91.30	1.8%	Free	Free	Free	Free	Free	Free	Free	Free	Free
5906.99.10	1.8%	Free	Free	Free	Free	Free	Free	Free	Free	Free
5906.99.30	2.3%	Free	Free	Free	Free	Free	Free	Free	Free	Free
5907.00.15	8.9%	6.7%	4.4%	2.2%	Free	Free	Free	Free	Free	Free
5907.00.35	8.9%	6.7%	4.4%	2.2%	Free	Free	Free	Free	Free	Free
5908.00.00	2.4%	Free	Free	Free	Free	Free	Free	Free	Free	Free
5909.00.20	2.3%	Free	Free	Free	Free	Free	Free	Free	Free	Free
5910.00.10	4.2%	2.8%	1.4%	Free	Free	Free	Free	Free	Free	Free
5910.00.90	1.8%	Free	Free	Free	Free	Free	Free	Free	Free	Free
5911.10.10	2%	Free	Free	Free	Free	Free	Free	Free	Free	Free
5911.10.20	3.9%	2.6%	1.3%	Free	Free	Free	Free	Free	Free	Free
5911.20.10	2.3%	Free	Free	Free	Free	Free	Free	Free	Free	Free
5911.31.00	3.9%	2.6%	1.3%	Free	Free	Free	Free	Free	Free	Free
5911.32.00	3.9%	2.6%	1.3%	Free	Free	Free	Free	Free	Free	Free
5911.40.00	7.5%	5%	2.5%	Free	Free	Free	Free	Free	Free	Free
5911.90.00	3.9%	2.6%	1.3%	Free	Free	Free	Free	Free	Free	Free
6001.10.20	14.4%	10.8%	7.2%	3.6%	Free	Free	Free	Free	Free	Free
6001.10.60	7.3%	4.9%	2.4%	Free	Free	Free	Free	Free	Free	Free
6001.21.00	8.2%	6.1%	4.1%	2%	Free	Free	Free	Free	Free	Free
6001.22.00	14.4%	10.8%	7.2%	3.6%	Free	Free	Free	Free	Free	Free
6001.29.00	5.5%	3.7%	1.8%	Free	Free	Free	Free	Free	Free	Free
6001.91.00	15.6%	11.7%	7.8%	3.9%	Free	Free	Free	Free	Free	Free
6001.92.00	14.4%	10.8%	7.2%	3.6%	Free	Free	Free	Free	Free	Free
6001.99.10	4.2%	2.8%	1.4%	Free	Free	Free	Free	Free	Free	Free
6001.99.90	5.5%	3.7%	1.8%	Free	Free	Free	Free	Free	Free	Free
6002.10.40	6.9%	4.6%	2.3%	Free	Free	Free	Free	Free	Free	Free
6002.10.80	6.3%	4.2%	2.1%	Free	Free	Free	Free	Free	Free	Free

Annex II (continued)
-112-

HTS Subheading	December 17, 2001	2002	2003	2004	2005	2006	2007	2008	2009	2010
6002.20.10	11.9%	8.9%	5.9%	2.9%	Free	Free	Free	Free	Free	Free
6002.20.30	6.6%	4.4%	2.2%	Free	Free	Free	Free	Free	Free	Free
6002.20.60	6%	4%	2%	Free	Free	Free	Free	Free	Free	Free
6002.20.90	5.2%	3.5%	1.7%	Free	Free	Free	Free	Free	Free	Free
6002.30.20	10.4%	7.8%	5.2%	2.6%	Free	Free	Free	Free	Free	Free
6002.30.90	5.5%	3.7%	1.8%	Free	Free	Free	Free	Free	Free	Free
6002.41.00	10.8%	8.1%	5.4%	2.7%	Free	Free	Free	Free	Free	Free
6002.42.00	9.2%	6.9%	4.6%	2.3%	Free	Free	Free	Free	Free	Free
6002.43.00	9.2%	6.9%	4.6%	2.3%	Free	Free	Free	Free	Free	Free
6002.49.00	9.2%	6.9%	4.6%	2.3%	Free	Free	Free	Free	Free	Free
6002.91.00	10.8%	8.1%	5.4%	2.7%	Free	Free	Free	Free	Free	Free
6002.92.10	9.2%	6.9%	4.6%	2.3%	Free	Free	Free	Free	Free	Free
6002.92.90	9.2%	6.9%	4.6%	2.3%	Free	Free	Free	Free	Free	Free
6002.93.00	9.2%	6.9%	4.6%	2.3%	Free	Free	Free	Free	Free	Free
6002.99.10	7.3%	4.9%	2.4%	Free	Free	Free	Free	Free	Free	Free
6101.10.00	54.3¢/kg + 14%	40.7¢/kg + 10.5%	27.1¢/kg + 7%	13.5¢/kg + 3.5%	Free	Free	Free	Free	Free	Free
6101.20.00	13%	9.7%	6.5%	3.2%	Free	Free	Free	Free	Free	Free
6101.30.10	4.3%	2.9%	1.4%	Free	Free	Free	Free	Free	Free	Free
6101.30.15	43.2¢/kg + 11.2%	32.4¢/kg + 8.4%	21.6¢/kg + 5.6%	10.8¢/kg + 2.8%	Free	Free	Free	Free	Free	Free
6101.30.20	26%	23.1%	20.2%	17.3%	14.4%	11.5%	8.6%	5.7%	2.8%	Free
6101.90.10	1.5%	Free	Free	Free	Free	Free	Free	Free	Free	Free
6101.90.90	4.4%	2.9%	1.4%	Free	Free	Free	Free	Free	Free	Free
6102.10.00	48.7¢/kg + 14.2%	36.5¢/kg + 10.6%	24.3¢/kg + 7.1%	12.1¢/kg + 3.5%	Free	Free	Free	Free	Free	Free
6102.20.00	13%	9.7%	6.5%	3.2%	Free	Free	Free	Free	Free	Free
6102.30.05	4.2%	2.8%	1.4%	Free	Free	Free	Free	Free	Free	Free
6102.30.10	59.4¢/kg + 17.3%	52.8¢/kg + 15.4%	46.2¢/kg + 13.5%	39.6¢/kg + 11.5%	33¢/kg + 9.6%	26.4¢/kg + 7.7%	19.8¢/kg + 5.7%	13.2¢/kg + 3.8%	6.6¢/kg + 1.9%	Free
6102.30.20	26%	23.1%	20.2%	17.3%	14.4%	11.5%	8.6%	5.7%	2.8%	Free
6102.90.10	1.5%	Free	Free	Free	Free	Free	Free	Free	Free	Free

Annex II (continued)
-113-

HTS Subheading	December 17, 2001	2002	2003	2004	2005	2006	2007	2008	2009	2010
6102.90.90	4.4%	2.9%	1.4%	Free	Free	Free	Free	Free	Free	Free
6103.11.00	43.3¢/kg + 11.2%	32.5¢/kg + 8.4%	21.6¢/kg + 5.6%	10.8¢/kg + 2.8%	Free	Free	Free	Free	Free	Free
6103.12.10	53.6¢/kg + 13.9%	40.2¢/kg + 10.4%	26.8¢/kg + 6.9%	13.4¢/kg + 3.4%	Free	Free	Free	Free	Free	Free
6103.12.20	26%	23.1%	20.2%	17.3%	14.4%	11.5%	8.6%	5.7%	2.8%	Free
6103.19.20	10.4%	7.8%	5.2%	2.6%	Free	Free	Free	Free	Free	Free
6103.19.60	1.4%	Free	Free	Free	Free	Free	Free	Free	Free	Free
6103.19.90	4.3%	2.9%	1.4%	Free	Free	Free	Free	Free	Free	Free
6103.21.00	The rate applicable to each garment in the ensemble if separately entered	The rate applicable to each garment in the ensemble if separately entered	The rate applicable to each garment in the ensemble if separately entered	The rate applicable to each garment in the ensemble if separately entered	Free	Free	Free	Free	Free	Free
6103.22.00	The rate applicable to each garment in the ensemble if separately entered	The rate applicable to each garment in the ensemble if separately entered	The rate applicable to each garment in the ensemble if separately entered	The rate applicable to each garment in the ensemble if separately entered	Free	Free	Free	Free	Free	Free
6103.23.00	The rate applicable to each garment in the ensemble if separately entered	The rate applicable to each garment in the ensemble if separately entered	The rate applicable to each garment in the ensemble if separately entered	The rate applicable to each garment in the ensemble if separately entered	The rate applicable to each garment in the ensemble if separately entered	The rate applicable to each garment in the ensemble if separately entered	The rate applicable to each garment in the ensemble if separately entered	The rate applicable to each garment in the ensemble if separately entered	The rate applicable to each garment in the ensemble if separately entered	Free
6103.29.10	The rate applicable to each garment in the ensemble if separately entered	The rate applicable to each garment in the ensemble if separately entered	The rate applicable to each garment in the ensemble if separately entered	The rate applicable to each garment in the ensemble if separately entered	The rate applicable to each garment in the ensemble if separately entered	The rate applicable to each garment in the ensemble if separately entered	The rate applicable to each garment in the ensemble if separately entered	The rate applicable to each garment in the ensemble if separately entered	The rate applicable to each garment in the ensemble if separately entered	Free

Annex II (continued)
-114-

HTS Subheading	December 17, 2001	2002	2003	2004	2005	2006	2007	2008	2009	2010
6103.29.20	The rate applicable to each garment in the ensemble if separately entered	The rate applicable to each garment in the ensemble if separately entered	The rate applicable to each garment in the ensemble if separately entered	Free	Free	Free	Free	Free	Free	Free
6103.31.00	43.2¢/kg + 11.2%	32.4¢/kg + 8.4%	21.6¢/kg + 5.6%	10.8¢/kg + 2.8%	Free	Free	Free	Free	Free	Free
6103.32.00	11.9%	8.9%	5.9%	2.9%	Free	Free	Free	Free	Free	Free
6103.33.10	43.2¢/kg + 11.2%	32.4¢/kg + 8.4%	21.6¢/kg + 5.6%	10.8¢/kg + 2.8%	Free	Free	Free	Free	Free	Free
6103.33.20	26%	23.1%	20.2%	17.3%	14.4%	11.5%	8.6%	5.7%	2.8%	Free
6103.39.10	18.8%	16.7%	14.6%	12.5%	10.4%	8.3%	6.2%	4.1%	2%	Free
6103.39.40	1.4%	Free	Free	Free	Free	Free	Free	Free	Free	Free
6103.39.80	4.3%	2.9%	1.4%	Free	Free	Free	Free	Free	Free	Free
6103.41.10	54¢/kg + 14%	40.5¢/kg + 10.5%	27¢/kg + 7%	13.5¢/kg + 3.5%	Free	Free	Free	Free	Free	Free
6103.41.20	12%	9%	6%	3%	Free	Free	Free	Free	Free	Free
6103.42.10	13.2%	9.9%	6.6%	3.3%	Free	Free	Free	Free	Free	Free
6103.42.20	8.4%	6.3%	4.2%	2.1%	Free	Free	Free	Free	Free	Free
6103.43.10	59.4¢/kg + 15.3%	52.8¢/kg + 13.6%	46.2¢/kg + 11.9%	39.6¢/kg + 10.2%	33¢/kg + 8.5%	26.4¢/kg + 6.8%	19.8¢/kg + 5.1%	13.2¢/kg + 3.4%	6.6¢/kg + 1.7%	Free
6103.43.15	26%	23.1%	20.2%	17.3%	14.4%	11.5%	8.6%	5.7%	2.8%	Free
6103.43.20	12.5%	9.4%	6.2%	3.1%	Free	Free	Free	Free	Free	Free
6103.49.10	26%	23.1%	20.2%	17.3%	14.4%	11.5%	8.6%	5.7%	2.8%	Free
6103.49.20	12%	9%	6%	3%	Free	Free	Free	Free	Free	Free
6103.49.40	1.4%	Free	Free	Free	Free	Free	Free	Free	Free	Free
6103.49.80	4.3%	2.9%	1.4%	Free	Free	Free	Free	Free	Free	Free
6104.11.00	12%	9%	6%	3%	Free	Free	Free	Free	Free	Free
6104.13.20	18.8%	16.7%	14.6%	12.5%	10.4%	8.3%	6.2%	4.1%	2%	Free
6104.19.10	9.5%	7.1%	4.7%	2.3%	Free	Free	Free	Free	Free	Free
6104.19.40	1.4%	Free	Free	Free	Free	Free	Free	Free	Free	Free
6104.19.80	4.3%	2.9%	1.4%	Free	Free	Free	Free	Free	Free	Free

Annex II (continued)
-115-

HTS Subheading	December 17, 2001	2002	2003	2004	2005	2006	2007	2008	2009	2010
6104.21.00	The rate applicable to each garment in the ensemble if separately entered	The rate applicable to each garment in the ensemble if separately entered	The rate applicable to each garment in the ensemble if separately entered	The rate applicable to each garment in the ensemble if separately entered	Free	Free	Free	Free	Free	Free
6104.22.00	The rate applicable to each garment in the ensemble if separately entered	The rate applicable to each garment in the ensemble if separately entered	The rate applicable to each garment in the ensemble if separately entered	The rate applicable to each garment in the ensemble if separately entered	Free	Free	Free	Free	Free	Free
6104.23.00	The rate applicable to each garment in the ensemble if separately entered	The rate applicable to each garment in the ensemble if separately entered	The rate applicable to each garment in the ensemble if separately entered	The rate applicable to each garment in the ensemble if separately entered	The rate applicable to each garment in the ensemble if separately entered	The rate applicable to each garment in the ensemble if separately entered	The rate applicable to each garment in the ensemble if separately entered	The rate applicable to each garment in the ensemble if separately entered	The rate applicable to each garment in the ensemble if separately entered	Free
6104.29.10	The rate applicable to each garment in the ensemble if separately entered	The rate applicable to each garment in the ensemble if separately entered	The rate applicable to each garment in the ensemble if separately entered	The rate applicable to each garment in the ensemble if separately entered	The rate applicable to each garment in the ensemble if separately entered	The rate applicable to each garment in the ensemble if separately entered	The rate applicable to each garment in the ensemble if separately entered	The rate applicable to each garment in the ensemble if separately entered	The rate applicable to each garment in the ensemble if separately entered	Free
6104.29.20	The rate applicable to each garment in the ensemble if separately entered	The rate applicable to each garment in the ensemble if separately entered	The rate applicable to each garment in the ensemble if separately entered	Free	Free	Free	Free	Free	Free	Free
6104.31.00	48.1¢/kg + 14%	36.1¢/kg + 10.5%	24¢/kg + 7%	12¢/kg + 3.5%	Free	Free	Free	Free	Free	Free
6104.32.00	12.5%	9.4%	6.2%	3.1%	Free	Free	Free	Free	Free	Free

Annex II (continued)
-116-

HTS Subheading	December 17, 2001	2002	2003	2004	2005	2006	2007	2008	2009	2010
6104.33.10	48.9¢/kg + 14.3%	36.7¢/kg + 10.7%	24.4¢/kg + 7.1%	12.2¢/kg + 3.5%	Free	Free	Free	Free	Free	Free
6104.33.20	26%	23.1%	20.2%	17.3%	14.4%	11.5%	8.6%	5.7%	2.8%	Free
6104.39.10	23.7%	21.1%	18.4%	15.8%	13.2%	10.5%	7.9%	5.2%	2.6%	Free
6104.41.00	12%	9%	6%	3%	Free	Free	Free	Free	Free	Free
6104.42.00	9.4%	7%	4.7%	2.3%	Free	Free	Free	Free	Free	Free
6104.43.10	12.5%	9.4%	6.2%	3.1%	Free	Free	Free	Free	Free	Free
6104.43.20	13.1%	9.8%	6.5%	3.2%	Free	Free	Free	Free	Free	Free
6104.44.10	12.5%	9.4%	6.2%	3.1%	Free	Free	Free	Free	Free	Free
6104.44.20	12.5%	9.4%	6.2%	3.1%	Free	Free	Free	Free	Free	Free
6104.49.10	1.4%	Free	Free	Free	Free	Free	Free	Free	Free	Free
6104.49.90	4.3%	2.9%	1.4%	Free	Free	Free	Free	Free	Free	Free
6104.51.00	12.5%	9.4%	6.2%	3.1%	Free	Free	Free	Free	Free	Free
6104.52.00	6.3%	4.2%	2.1%	Free	Free	Free	Free	Free	Free	Free
6104.53.10	12.5%	9.4%	6.2%	3.1%	Free	Free	Free	Free	Free	Free
6104.53.20	13.1%	9.8%	6.5%	3.2%	Free	Free	Free	Free	Free	Free
6104.59.10	9.2%	6.9%	4.6%	2.3%	Free	Free	Free	Free	Free	Free
6104.59.40	1.4%	Free	Free	Free	Free	Free	Free	Free	Free	Free
6104.59.80	4.3%	2.9%	1.4%	Free	Free	Free	Free	Free	Free	Free
6104.61.00	12.5%	9.4%	6.2%	3.1%	Free	Free	Free	Free	Free	Free
6104.62.10	8.4%	6.3%	4.2%	2.1%	Free	Free	Free	Free	Free	Free
6104.63.10	12.5%	9.4%	6.2%	3.1%	Free	Free	Free	Free	Free	Free
6104.63.15	12.5%	9.4%	6.2%	3.1%	Free	Free	Free	Free	Free	Free
6104.63.20	26%	23.1%	20.2%	17.3%	14.4%	11.5%	8.6%	5.7%	2.8%	Free
6104.69.10	12%	9%	6%	3%	Free	Free	Free	Free	Free	Free
6104.69.20	26%	23.1%	20.2%	17.3%	14.4%	11.5%	8.6%	5.7%	2.8%	Free
6104.69.40	1.4%	Free	Free	Free	Free	Free	Free	Free	Free	Free
6104.69.80	4.3%	2.9%	1.4%	Free	Free	Free	Free	Free	Free	Free
6105.10.00	18.1%	16.1%	14.1%	12.1%	10.1%	8%	6%	4%	2%	Free
6105.20.10	12%	9%	6%	3%	Free	Free	Free	Free	Free	Free
6105.20.20	29.7%	26.4%	23.1%	19.8%	16.5%	13.2%	9.9%	6.6%	3.3%	Free
6105.90.10	12.5%	9.4%	6.2%	3.1%	Free	Free	Free	Free	Free	Free

Annex II (continued)
-117-

HTS Subheading	December 17, 2001	2002	2003	2004	2005	2006	2007	2008	2009	2010
6105.90.40	1.4%	Free	Free	Free	Free	Free	Free	Free	Free	Free
6105.90.80	4.3%	2.9%	1.4%	Free	Free	Free	Free	Free	Free	Free
6106.10.00	18.1%	16.1%	14.1%	12.1%	10.1%	8%	6%	4%	2%	Free
6106.20.10	12.5%	9.4%	6.2%	3.1%	Free	Free	Free	Free	Free	Free
6106.20.20	29.7%	26.4%	23.1%	19.8%	16.5%	13.2%	9.9%	6.6%	3.3%	Free
6106.90.10	12%	9%	6%	3%	Free	Free	Free	Free	Free	Free
6106.90.15	1.4%	Free	Free	Free	Free	Free	Free	Free	Free	Free
6106.90.25	4.3%	2.9%	1.4%	Free	Free	Free	Free	Free	Free	Free
6106.90.30	2.4%	Free	Free	Free	Free	Free	Free	Free	Free	Free
6107.11.00	5.7%	3.8%	1.9%	Free	Free	Free	Free	Free	Free	Free
6107.12.00	12.2%	9.1%	6.1%	3%	Free	Free	Free	Free	Free	Free
6107.19.10	1.4%	Free	Free	Free	Free	Free	Free	Free	Free	Free
6107.19.90	4.3%	2.9%	1.4%	Free	Free	Free	Free	Free	Free	Free
6107.21.00	6.8%	4.5%	2.2%	Free	Free	Free	Free	Free	Free	Free
6107.22.00	13.1%	9.8%	6.5%	3.2%	Free	Free	Free	Free	Free	Free
6107.29.20	9.5%	7.1%	4.7%	2.3%	Free	Free	Free	Free	Free	Free
6107.29.50	1.4%	Free	Free	Free	Free	Free	Free	Free	Free	Free
6107.29.90	4.3%	2.9%	1.4%	Free	Free	Free	Free	Free	Free	Free
6107.91.00	6.6%	4.4%	2.2%	Free	Free	Free	Free	Free	Free	Free
6107.92.00	12.5%	9.4%	6.2%	3.1%	Free	Free	Free	Free	Free	Free
6107.99.20	12%	9%	6%	3%	Free	Free	Free	Free	Free	Free
6107.99.50	1.2%	Free	Free	Free	Free	Free	Free	Free	Free	Free
6107.99.90	2.4%	Free	Free	Free	Free	Free	Free	Free	Free	Free
6108.11.00	12.3%	9.2%	6.1%	3%	Free	Free	Free	Free	Free	Free
6108.19.10	1.7%	Free	Free	Free	Free	Free	Free	Free	Free	Free
6108.19.90	5.1%	3.4%	1.7%	Free	Free	Free	Free	Free	Free	Free
6108.21.00	5.8%	3.9%	1.9%	Free	Free	Free	Free	Free	Free	Free
6108.22.10	9.2%	6.9%	4.6%	2.3%	Free	Free	Free	Free	Free	Free
6108.22.90	12.8%	9.6%	6.4%	3.2%	Free	Free	Free	Free	Free	Free
6108.29.10	5.1%	3.4%	1.7%	Free	Free	Free	Free	Free	Free	Free
6108.29.90	10.8%	8.1%	5.4%	2.7%	Free	Free	Free	Free	Free	Free

Annex II (continued)
-118-

HTS Subheading	December 17, 2001	2002	2003	2004	2005	2006	2007	2008	2009	2010
6108.31.00	6.5%	4.3%	2.1%	Free	Free	Free	Free	Free	Free	Free
6108.32.00	13.1%	9.8%	6.5%	3.2%	Free	Free	Free	Free	Free	Free
6108.39.10	9.5%	7.1%	4.7%	2.3%	Free	Free	Free	Free	Free	Free
6108.39.40	1%	Free	Free	Free	Free	Free	Free	Free	Free	Free
6108.39.80	1.9%	Free	Free	Free	Free	Free	Free	Free	Free	Free
6108.91.00	6.5%	4.3%	2.1%	Free	Free	Free	Free	Free	Free	Free
6108.92.00	13.1%	9.8%	6.5%	3.2%	Free	Free	Free	Free	Free	Free
6108.99.20	9.5%	7.1%	4.7%	2.3%	Free	Free	Free	Free	Free	Free
6108.99.50	1%	Free	Free	Free	Free	Free	Free	Free	Free	Free
6108.99.90	1.9%	Free	Free	Free	Free	Free	Free	Free	Free	Free
6109.10.00	14.6%	10.9%	7.3%	3.6%	Free	Free	Free	Free	Free	Free
6109.90.15	4.3%	2.9%	1.4%	Free	Free	Free	Free	Free	Free	Free
6109.90.40	6.3%	4.2%	2.1%	Free	Free	Free	Free	Free	Free	Free
6109.90.80	13.1%	9.8%	6.5%	3.2%	Free	Free	Free	Free	Free	Free
6110.10.10	4%	2.7%	1.3%	Free	Free	Free	Free	Free	Free	Free
6110.10.20	13.1%	9.8%	6.5%	3.2%	Free	Free	Free	Free	Free	Free
6110.30.10	4.5%	3%	1.5%	Free	Free	Free	Free	Free	Free	Free
6110.30.15	13.6%	10.2%	6.8%	3.4%	Free	Free	Free	Free	Free	Free
6110.30.20	4.7%	3.1%	1.5%	Free	Free	Free	Free	Free	Free	Free
6110.90.10	1.4%	Free	Free	Free	Free	Free	Free	Free	Free	Free
6110.90.90	4.5%	3%	1.5%	Free	Free	Free	Free	Free	Free	Free
6111.10.00	12%	9%	6%	3%	Free	Free	Free	Free	Free	Free
6111.20.10	18.1%	16.1%	14.1%	12.1%	10.1%	8%	6%	4%	2%	Free
6111.20.20	13.8%	10.3%	6.9%	3.4%	Free	Free	Free	Free	Free	Free
6111.20.30	13.8%	10.3%	6.9%	3.4%	Free	Free	Free	Free	Free	Free
6111.20.40	9.4%	7%	4.7%	2.3%	Free	Free	Free	Free	Free	Free
6111.20.50	12.4%	9.3%	6.2%	3.1%	Free	Free	Free	Free	Free	Free
6111.20.60	6.2%	4.1%	2%	Free	Free	Free	Free	Free	Free	Free
6111.30.10	26%	23.1%	20.2%	17.3%	14.4%	11.5%	8.6%	5.7%	2.8%	Free
6111.30.20	29.7%	26.4%	23.1%	19.8%	16.5%	13.2%	9.9%	6.6%	3.3%	Free
6111.30.30	29.7%	26.4%	23.1%	19.8%	16.5%	13.2%	9.9%	6.6%	3.3%	Free

Annex II (continued)
-119-

HTS Subheading	December 17, 2001	2002	2003	2004	2005	2006	2007	2008	2009	2010
6111.30.40	28.6%	25.4%	22.2%	19%	15.9%	12.7%	9.5%	6.3%	3.1%	Free
6111.30.50	13.1%	9.8%	6.5%	3.2%	Free	Free	Free	Free	Free	Free
6111.90.10	18.8%	16.7%	14.6%	12.5%	10.4%	8.3%	6.2%	4.1%	2%	Free
6111.90.20	21.7%	19.3%	16.9%	14.5%	12.1%	9.6%	7.2%	4.8%	2.4%	Free
6111.90.40	26.4%	23.5%	20.5%	17.6%	14.7%	11.7%	8.8%	5.8%	2.9%	Free
6111.90.50	12.5%	9.4%	6.2%	3.1%	Free	Free	Free	Free	Free	Free
6111.90.70	1.4%	Free	Free	Free	Free	Free	Free	Free	Free	Free
6111.90.90	4.3%	2.9%	1.4%	Free	Free	Free	Free	Free	Free	Free
6112.11.00	12.5%	9.4%	6.2%	3.1%	Free	Free	Free	Free	Free	Free
6112.12.00	26%	23.1%	20.2%	17.3%	14.4%	11.5%	8.6%	5.7%	2.8%	Free
6112.19.10	26%	23.1%	20.2%	17.3%	14.4%	11.5%	8.6%	5.7%	2.8%	Free
6112.19.40	9%	6.7%	4.5%	2.2%	Free	Free	Free	Free	Free	Free
6112.19.80	19.9%	17.7%	15.5%	13.3%	11.1%	8.8%	6.6%	4.4%	2.2%	Free
6112.20.10	26%	23.1%	20.2%	17.3%	14.4%	11.5%	8.6%	5.7%	2.8%	Free
6112.20.20	9.2%	6.9%	4.6%	2.3%	Free	Free	Free	Free	Free	Free
6112.31.00	23.9%	21.2%	18.6%	15.9%	13.3%	10.6%	7.9%	5.3%	2.6%	Free
6112.39.00	10.8%	8.1%	5.4%	2.7%	Free	Free	Free	Free	Free	Free
6112.41.00	22.9%	20.4%	17.8%	15.3%	12.7%	10.2%	7.6%	5.1%	2.5%	Free
6112.49.00	10.8%	8.1%	5.4%	2.7%	Free	Free	Free	Free	Free	Free
6113.00.10	3.9%	2.6%	1.3%	Free	Free	Free	Free	Free	Free	Free
6113.00.90	5.4%	3.6%	1.8%	Free	Free	Free	Free	Free	Free	Free
6114.10.00	11.2%	8.4%	5.6%	2.8%	Free	Free	Free	Free	Free	Free
6114.20.00	8.8%	6.6%	4.4%	2.2%	Free	Free	Free	Free	Free	Free
6114.30.10	26%	23.1%	20.2%	17.3%	14.4%	11.5%	8.6%	5.7%	2.8%	Free
6114.30.20	29.6%	26.3%	23%	19.7%	16.4%	13.1%	9.8%	6.5%	3.2%	Free
6114.30.30	12.3%	9.2%	6.1%	3%	Free	Free	Free	Free	Free	Free
6114.90.10	1.4%	Free	Free	Free	Free	Free	Free	Free	Free	Free
6114.90.90	4.3%	2.9%	1.4%	Free	Free	Free	Free	Free	Free	Free
6115.11.00	13.1%	9.8%	6.5%	3.2%	Free	Free	Free	Free	Free	Free
6115.12.20	12.5%	9.4%	6.2%	3.1%	Free	Free	Free	Free	Free	Free
6115.19.40	6.3%	4.2%	2.1%	Free	Free	Free	Free	Free	Free	Free

Annex II (continued)
-120-

HTS Subheading	December 17, 2001	2002	2003	2004	2005	2006	2007	2008	2009	2010
6115.19.80	13.1%	9.8%	6.5%	3.2%	Free	Free	Free	Free	Free	Free
6115.20.10	6.6%	4.4%	2.2%	Free	Free	Free	Free	Free	Free	Free
6115.20.90	12.8%	9.6%	6.4%	3.2%	Free	Free	Free	Free	Free	Free
6115.91.00	9.2%	6.9%	4.6%	2.3%	Free	Free	Free	Free	Free	Free
6115.92.60	11.2%	8.4%	5.6%	2.8%	Free	Free	Free	Free	Free	Free
6115.92.90	11.1%	8.3%	5.5%	2.7%	Free	Free	Free	Free	Free	Free
6115.93.60	15.4%	11.5%	7.7%	3.8%	Free	Free	Free	Free	Free	Free
6115.93.90	12%	9%	6%	3%	Free	Free	Free	Free	Free	Free
6115.99.14	15.4%	11.5%	7.7%	3.8%	Free	Free	Free	Free	Free	Free
6115.99.18	12%	9%	6%	3%	Free	Free	Free	Free	Free	Free
6115.99.40	3.9%	2.6%	1.3%	Free	Free	Free	Free	Free	Free	Free
6115.99.80	8%	6%	4%	2%	Free	Free	Free	Free	Free	Free
6116.10.08	1.9%	Free	Free	Free	Free	Free	Free	Free	Free	Free
6116.10.13	14%	10.5%	7%	3.5%	Free	Free	Free	Free	Free	Free
6116.10.17	21.6%	19.2%	16.8%	14.4%	12%	9.6%	7.2%	4.8%	2.4%	Free
6116.10.44	11.1%	8.3%	5.5%	2.7%	Free	Free	Free	Free	Free	Free
6116.10.48	15.2%	11.4%	7.6%	3.8%	Free	Free	Free	Free	Free	Free
6116.10.55	10.8%	8.1%	5.4%	2.7%	Free	Free	Free	Free	Free	Free
6116.10.65	7.3%	4.9%	2.4%	Free	Free	Free	Free	Free	Free	Free
6116.10.75	10.8%	8.1%	5.4%	2.7%	Free	Free	Free	Free	Free	Free
6116.10.95	7.3%	4.9%	2.4%	Free	Free	Free	Free	Free	Free	Free
6116.91.00	24¢/kg + 5.4%	16¢/kg + 3.6%	8¢/kg + 1.8%	Free	Free	Free	Free	Free	Free	Free
6116.92.08	1.9%	Free	Free	Free	Free	Free	Free	Free	Free	Free
6116.92.64	21.6%	19.2%	16.8%	14.4%	12%	9.6%	7.2%	4.8%	2.4%	Free
6116.92.74	21.6%	19.2%	16.8%	14.4%	12%	9.6%	7.2%	4.8%	2.4%	Free
6116.92.88	7.2%	4.8%	2.4%	Free	Free	Free	Free	Free	Free	Free
6116.92.94	7.2%	4.8%	2.4%	Free	Free	Free	Free	Free	Free	Free
6116.93.08	1.9%	Free	Free	Free	Free	Free	Free	Free	Free	Free
6116.93.64	23.8¢/kg + 5.3%	15.9¢/kg + 3.5%	7.9¢/kg + 1.7%	Free	Free	Free	Free	Free	Free	Free
6116.93.74	23.8¢/kg + 5.3%	15.9¢/kg + 3.5%	7.9¢/kg + 1.7%	Free	Free	Free	Free	Free	Free	Free

Annex II (continued)
-121-

HTS Subheading	December 17, 2001	2002	2003	2004	2005	2006	2007	2008	2009	2010
6116.93.88	15.2%	11.4%	7.6%	3.8%	Free	Free	Free	Free	Free	Free
6116.93.94	15.2%	11.4%	7.6%	3.8%	Free	Free	Free	Free	Free	Free
6116.99.35	1.9%	Free	Free	Free	Free	Free	Free	Free	Free	Free
6116.99.48	15.4%	11.5%	7.7%	3.8%	Free	Free	Free	Free	Free	Free
6116.99.54	15.4%	11.5%	7.7%	3.8%	Free	Free	Free	Free	Free	Free
6116.99.95	1.9%	Free	Free	Free	Free	Free	Free	Free	Free	Free
6117.10.10	7.3%	4.9%	2.4%	Free	Free	Free	Free	Free	Free	Free
6117.10.20	9.2%	6.9%	4.6%	2.3%	Free	Free	Free	Free	Free	Free
6117.10.40	2.4%	Free	Free	Free	Free	Free	Free	Free	Free	Free
6117.10.60	7.2%	4.8%	2.4%	Free	Free	Free	Free	Free	Free	Free
6117.20.10	2%	Free	Free	Free	Free	Free	Free	Free	Free	Free
6117.20.90	4.7%	3.1%	1.5%	Free	Free	Free	Free	Free	Free	Free
6117.80.10	5.7%	3.8%	1.9%	Free	Free	Free	Free	Free	Free	Free
6117.80.85	12%	9%	6%	3%	Free	Free	Free	Free	Free	Free
6117.80.95	12%	9%	6%	3%	Free	Free	Free	Free	Free	Free
6117.90.10	5.7%	3.8%	1.9%	Free	Free	Free	Free	Free	Free	Free
6117.90.90	12%	9%	6%	3%	Free	Free	Free	Free	Free	Free
6201.11.00	36.6¢/kg + 14.5%	27.4¢/kg + 10.9%	18.3¢/kg + 7.2%	9.1¢/kg + 3.6%	Free	Free	Free	Free	Free	Free
6201.12.10	2.2%	Free	Free	Free	Free	Free	Free	Free	Free	Free
6201.12.20	7.2%	4.8%	2.4%	Free	Free	Free	Free	Free	Free	Free
6201.13.10	2.2%	Free	Free	Free	Free	Free	Free	Free	Free	Free
6201.13.30	45.9¢/kg + 18.1%	40.8¢/kg + 16.1%	35.7¢/kg + 14.1%	30.6¢/kg + 12.1%	25.5¢/kg + 10.1%	20.4¢/kg + 8%	15.3¢/kg + 6%	10.2¢/kg + 4%	5.1¢/kg + 2%	Free
6201.13.40	25.5%	22.7%	19.8%	17%	14.2%	11.3%	8.5%	5.6%	2.8%	Free
6201.19.90	1.4%	Free	Free	Free	Free	Free	Free	Free	Free	Free
6201.91.10	9.5%	7.1%	4.7%	2.3%	Free	Free	Free	Free	Free	Free
6201.91.20	45.9¢/kg + 18.1%	40.8¢/kg + 16.1%	35.7¢/kg + 14.1%	30.6¢/kg + 12.1%	25.5¢/kg + 10.1%	20.4¢/kg + 8%	15.3¢/kg + 6%	10.2¢/kg + 4%	5.1¢/kg + 2%	Free
6201.92.10	2.2%	Free	Free	Free	Free	Free	Free	Free	Free	Free
6201.92.15	4.8%	3.2%	1.6%	Free	Free	Free	Free	Free	Free	Free
6201.92.20	7.2%	4.8%	2.4%	Free	Free	Free	Free	Free	Free	Free

Annex II (continued)
-122-

HTS Subheading	December 17, 2001	2002	2003	2004	2005	2006	2007	2008	2009	2010
6201.93.10	2.2%	Free	Free	Free	Free	Free	Free	Free	Free	Free
6201.93.20	12.5%	9.4%	6.2%	3.1%	Free	Free	Free	Free	Free	Free
6201.93.25	45.8¢/kg + 18.1%	40.7¢/kg + 16.1%	35.6¢/kg + 14.1%	30.5¢/kg + 12.1%	25.4¢/kg + 10.1%	20.3¢/kg + 8%	15.2¢/kg + 6%	10.1¢/kg + 4%	5¢/kg + 2%	Free
6201.93.30	5.4%	3.6%	1.8%	Free	Free	Free	Free	Free	Free	Free
6201.93.35	25.5%	22.7%	19.8%	17%	14.2%	11.3%	8.5%	5.6%	2.8%	Free
6201.99.90	2.1%	Free	Free	Free	Free	Free	Free	Free	Free	Free
6202.11.00	34.4¢/kg + 14.5%	25.8¢/kg + 10.9%	17.2¢/kg + 7.2%	8.6¢/kg + 3.6%	Free	Free	Free	Free	Free	Free
6202.12.10	2.2%	Free	Free	Free	Free	Free	Free	Free	Free	Free
6202.12.20	6.8%	4.5%	2.2%	Free	Free	Free	Free	Free	Free	Free
6202.13.10	2.2%	Free	Free	Free	Free	Free	Free	Free	Free	Free
6202.13.30	40.1¢/kg + 18.1%	35.6¢/kg + 16.1%	31.2¢/kg + 14.1%	26.7¢/kg + 12.1%	22.3¢/kg + 10.1%	17.8¢/kg + 8%	13.3¢/kg + 6%	8.9¢/kg + 4%	4.4¢/kg + 2%	Free
6202.13.40	25.5%	22.7%	19.8%	17%	14.2%	11.3%	8.5%	5.6%	2.8%	Free
6202.19.90	1.4%	Free	Free	Free	Free	Free	Free	Free	Free	Free
6202.91.10	12.1%	9.1%	6%	3%	Free	Free	Free	Free	Free	Free
6202.91.20	32¢/kg + 14.5%	24¢/kg + 10.9%	16¢/kg + 7.2%	8¢/kg + 3.6%	Free	Free	Free	Free	Free	Free
6202.92.10	2.2%	Free	Free	Free	Free	Free	Free	Free	Free	Free
6202.92.15	4.8%	3.2%	1.6%	Free	Free	Free	Free	Free	Free	Free
6202.92.20	6.8%	4.5%	2.2%	Free	Free	Free	Free	Free	Free	Free
6202.93.10	2.2%	Free	Free	Free	Free	Free	Free	Free	Free	Free
6202.93.20	12.5%	9.4%	6.2%	3.1%	Free	Free	Free	Free	Free	Free
6202.93.40	40.1¢/kg + 18.1%	35.6¢/kg + 16.1%	31.2¢/kg + 14.1%	26.7¢/kg + 12.1%	22.3¢/kg + 10.1%	17.8¢/kg + 8%	13.3¢/kg + 6%	8.9¢/kg + 4%	4.4¢/kg + 2%	Free
6202.93.45	5.4%	3.6%	1.8%	Free	Free	Free	Free	Free	Free	Free
6202.93.50	25.5%	22.7%	19.8%	17%	14.2%	11.3%	8.5%	5.6%	2.8%	Free
6202.99.90	1.4%	Free	Free	Free	Free	Free	Free	Free	Free	Free
6203.11.15	5.6%	3.7%	1.8%	Free	Free	Free	Free	Free	Free	Free
6203.11.30	5.6%	3.7%	1.8%	Free	Free	Free	Free	Free	Free	Free
6203.11.60	16.9¢/kg + 15.1%	12.7¢/kg + 11.3%	8.4¢/kg + 7.5%	4.2¢/kg + 3.7%	Free	Free	Free	Free	Free	Free

Annex II (continued)
-123-

HTS Subheading	December 17, 2001	2002	2003	2004	2005	2006	2007	2008	2009	2010
6203.11.90	16.9¢/kg + 15.1%	12.7¢/kg + 11.3%	8.4¢/kg + 7.5%	4.2¢/kg + 3.7%	Free	Free	Free	Free	Free	Free
6203.12.10	16.9¢/kg + 15.1%	12.7¢/kg + 11.3%	8.4¢/kg + 7.5%	4.2¢/kg + 3.7%	Free	Free	Free	Free	Free	Free
6203.12.20	25.2%	22.4%	19.6%	16.8%	14%	11.2%	8.4%	5.6%	2.8%	Free
6203.19.10	11.6%	8.7%	5.8%	2.9%	Free	Free	Free	Free	Free	Free
6203.19.20	47.6¢/kg + 18.9%	42.3¢/kg + 16.8%	37¢/kg + 14.7%	31.7¢/kg + 12.6%	26.4¢/kg + 10.5%	21.1¢/kg + 8.4%	15.8¢/kg + 6.3%	10.5¢/kg + 4.2%	5.2¢/kg + 2.1%	Free
6203.19.30	18.4%	16.4%	14.3%	12.3%	10.2%	8.2%	6.1%	4.1%	2%	Free
6203.19.50	3.9%	2.6%	1.3%	Free	Free	Free	Free	Free	Free	Free
6203.19.90	5.4%	3.6%	1.8%	Free	Free	Free	Free	Free	Free	Free
6203.21.30	The rate applicable to each garment in the ensemble if separately entered	The rate applicable to each garment in the ensemble if separately entered	The rate applicable to each garment in the ensemble if separately entered	The rate applicable to each garment in the ensemble if separately entered	Free	Free	Free	Free	Free	Free
6203.21.90	The rate applicable to each garment in the ensemble if separately entered	The rate applicable to each garment in the ensemble if separately entered	The rate applicable to each garment in the ensemble if separately entered	The rate applicable to each garment in the ensemble if separately entered	Free	Free	Free	Free	Free	Free
6203.22.10	5.7%	3.8%	1.9%	Free	Free	Free	Free	Free	Free	Free
6203.22.30	The rate applicable to each garment in the ensemble if separately entered	The rate applicable to each garment in the ensemble if separately entered	The rate applicable to each garment in the ensemble if separately entered	The rate applicable to each garment in the ensemble if separately entered	The rate applicable to each garment in the ensemble if separately entered	The rate applicable to each garment in the ensemble if separately entered	The rate applicable to each garment in the ensemble if separately entered	The rate applicable to each garment in the ensemble if separately entered	The rate applicable to each garment in the ensemble if separately entered	Free

Annex II (continued)
-124-

HTS Subheading	December 17, 2001	2002	2003	2004	2005	2006	2007	2008	2009	2010
6203.23.00	The rate applicable to each garment in the ensemble if separately entered	The rate applicable to each garment in the ensemble if separately entered	The rate applicable to each garment in the ensemble if separately entered	The rate applicable to each garment in the ensemble if separately entered	The rate applicable to each garment in the ensemble if separately entered	The rate applicable to each garment in the ensemble if separately entered	The rate applicable to each garment in the ensemble if separately entered	The rate applicable to each garment in the ensemble if separately entered	The rate applicable to each garment in the ensemble if separately entered	Free
6203.29.20	The rate applicable to each garment in the ensemble if separately entered	The rate applicable to each garment in the ensemble if separately entered	The rate applicable to each garment in the ensemble if separately entered	The rate applicable to each garment in the ensemble if separately entered	The rate applicable to each garment in the ensemble if separately entered	The rate applicable to each garment in the ensemble if separately entered	The rate applicable to each garment in the ensemble if separately entered	The rate applicable to each garment in the ensemble if separately entered	The rate applicable to each garment in the ensemble if separately entered	Free
6203.29.30	The rate applicable to each garment in the ensemble if separately entered	Free	Free	Free	Free	Free	Free	Free	Free	Free
6203.31.50	15.4%	11.5%	7.7%	3.8%	Free	Free	Free	Free	Free	Free
6203.31.90	15.4%	11.5%	7.7%	3.8%	Free	Free	Free	Free	Free	Free
6203.32.10	1.4%	Free	Free	Free	Free	Free	Free	Free	Free	Free
6203.32.20	7.2%	4.8%	2.4%	Free	Free	Free	Free	Free	Free	Free
6203.33.10	19.8%	17.6%	15.4%	13.2%	11%	8.8%	6.6%	4.4%	2.2%	Free
6203.33.20	25.2%	22.4%	19.6%	16.8%	14%	11.2%	8.4%	5.6%	2.8%	Free
6203.39.10	19.8%	17.6%	15.4%	13.2%	11%	8.8%	6.6%	4.4%	2.2%	Free
6203.39.20	25.2%	22.4%	19.6%	16.8%	14%	11.2%	8.4%	5.6%	2.8%	Free
6203.39.50	1.7%	Free	Free	Free	Free	Free	Free	Free	Free	Free
6203.39.90	5%	3.3%	1.6%	Free	Free	Free	Free	Free	Free	Free
6203.41.05	5.7%	3.8%	1.9%	Free	Free	Free	Free	Free	Free	Free
6203.41.12	37¢/kg + 14.5%	27.7¢/kg + 10.9%	18.5¢/kg + 7.2%	9.2¢/kg + 3.6%	Free	Free	Free	Free	Free	Free
6203.41.18	37¢/kg + 14.5%	27.7¢/kg + 10.9%	18.5¢/kg + 7.2%	9.2¢/kg + 3.6%	Free	Free	Free	Free	Free	Free

Annex II (continued)
-125-

HTS Subheading	December 17, 2001	2002	2003	2004	2005	2006	2007	2008	2009	2010
6203.41.20	9.5%	7.1%	4.7%	2.3%	Free	Free	Free	Free	Free	Free
6203.42.20	8.4%	6.3%	4.2%	2.1%	Free	Free	Free	Free	Free	Free
6203.42.40	13.6%	10.2%	6.8%	3.4%	Free	Free	Free	Free	Free	Free
6203.43.15	5.4%	3.6%	1.8%	Free	Free	Free	Free	Free	Free	Free
6203.43.20	12.5%	9.4%	6.2%	3.1%	Free	Free	Free	Free	Free	Free
6203.43.25	10%	7.5%	5%	2.5%	Free	Free	Free	Free	Free	Free
6203.43.30	45.8¢/kg + 18.1%	40.7¢/kg + 16.1%	35.6¢/kg + 14.1%	30.5¢/kg + 12.1%	25.4¢/kg + 10.1%	20.3¢/kg + 8%	15.2¢/kg + 6%	10.1¢/kg + 4%	5¢/kg + 2%	Free
6203.43.35	5.4%	3.6%	1.8%	Free	Free	Free	Free	Free	Free	Free
6203.43.40	25.7%	22.8%	20%	17.1%	14.3%	11.4%	8.5%	5.7%	2.8%	Free
6203.49.10	9.5%	7.1%	4.7%	2.3%	Free	Free	Free	Free	Free	Free
6203.49.15	10%	7.5%	5%	2.5%	Free	Free	Free	Free	Free	Free
6203.49.20	25.7%	22.8%	20%	17.1%	14.3%	11.4%	8.5%	5.7%	2.8%	Free
6203.49.80	1.4%	Free	Free	Free	Free	Free	Free	Free	Free	Free
6204.11.00	12.1%	9.1%	6%	3%	Free	Free	Free	Free	Free	Free
6204.12.00	12.6%	9.4%	6.3%	3.1%	Free	Free	Free	Free	Free	Free
6204.13.10	13.6%	10.2%	6.8%	3.4%	Free	Free	Free	Free	Free	Free
6204.13.20	32.5¢/kg + 23.8%	28.9¢/kg + 21.2%	25.3¢/kg + 18.5%	21.7¢/kg + 15.9%	18.1¢/kg + 13.2%	14.4¢/kg + 10.6%	10.8¢/kg + 7.9%	7.2¢/kg + 5.3%	3.6¢/kg + 2.6%	Free
6204.19.10	13.6%	10.2%	6.8%	3.4%	Free	Free	Free	Free	Free	Free
6204.19.20	32.5¢/kg + 23.8%	28.9¢/kg + 21.2%	25.3¢/kg + 18.5%	21.7¢/kg + 15.9%	18.1¢/kg + 13.2%	14.4¢/kg + 10.6%	10.8¢/kg + 7.9%	7.2¢/kg + 5.3%	3.6¢/kg + 2.6%	Free
6204.19.40	1.7%	Free	Free	Free	Free	Free	Free	Free	Free	Free
6204.19.80	5%	3.3%	1.6%	Free	Free	Free	Free	Free	Free	Free
6204.21.00	The rate applicable to each garment in the ensemble if separately entered	The rate applicable to each garment in the ensemble if separately entered	The rate applicable to each garment in the ensemble if separately entered	The rate applicable to each garment in the ensemble if separately entered	Free	Free	Free	Free	Free	Free
6204.22.10	5.7%	3.8%	1.9%	Free	Free	Free	Free	Free	Free	Free

Annex II (continued)
-126-

HTS Subheading	December 17, 2001	2002	2003	2004	2005	2006	2007	2008	2009	2010
6204.22.30	The rate applicable to each garment in the ensemble if separately entered	The rate applicable to each garment in the ensemble if separately entered	The rate applicable to each garment in the ensemble if separately entered	The rate applicable to each garment in the ensemble if separately entered	Free	Free	Free	Free	Free	Free
6204.23.00	The rate applicable to each garment in the ensemble if separately entered	The rate applicable to each garment in the ensemble if separately entered	The rate applicable to each garment in the ensemble if separately entered	The rate applicable to each garment in the ensemble if separately entered	The rate applicable to each garment in the ensemble if separately entered	The rate applicable to each garment in the ensemble if separately entered	The rate applicable to each garment in the ensemble if separately entered	The rate applicable to each garment in the ensemble if separately entered	The rate applicable to each garment in the ensemble if separately entered	Free
6204.29.20	The rate applicable to each garment in the ensemble if separately entered	The rate applicable to each garment in the ensemble if separately entered	The rate applicable to each garment in the ensemble if separately entered	The rate applicable to each garment in the ensemble if separately entered	The rate applicable to each garment in the ensemble if separately entered	The rate applicable to each garment in the ensemble if separately entered	The rate applicable to each garment in the ensemble if separately entered	The rate applicable to each garment in the ensemble if separately entered	The rate applicable to each garment in the ensemble if separately entered	Free
6204.29.40	The rate applicable to each garment in the ensemble if separately entered	The rate applicable to each garment in the ensemble if separately entered	The rate applicable to each garment in the ensemble if separately entered	Free	Free	Free	Free	Free	Free	Free
6204.31.10	5.6%	3.7%	1.8%	Free	Free	Free	Free	Free	Free	Free
6204.31.20	14.8¢/kg + 15.1%	11.1¢/kg + 11.3%	7.4¢/kg + 7.5%	3.7¢/kg + 3.7%	Free	Free	Free	Free	Free	Free
6204.32.10	1.4%	Free	Free	Free	Free	Free	Free	Free	Free	Free
6204.32.20	7.2%	4.8%	2.4%	Free	Free	Free	Free	Free	Free	Free
6204.33.10	5.4%	3.6%	1.8%	Free	Free	Free	Free	Free	Free	Free
6204.33.20	1.4%	Free	Free	Free	Free	Free	Free	Free	Free	Free
6204.33.40	41.6¢/kg + 18.9%	37¢/kg + 16.8%	32.4¢/kg + 14.7%	27.7¢/kg + 12.6%	23.1¢/kg + 10.5%	18.5¢/kg + 8.4%	13.8¢/kg + 6.3%	9.2¢/kg + 4.2%	4.6¢/kg + 2.1%	Free

Annex II (continued)
-127-

HTS Subheading	December 17, 2001	2002	2003	2004	2005	2006	2007	2008	2009	2010
6204.33.50	25.2%	22.4%	19.6%	16.8%	14%	11.2%	8.4%	5.6%	2.8%	Free
6204.39.20	32.6¢/kg + 14.8%	24.4¢/kg + 11.1%	16.3¢/kg + 7.4%	8.1¢/kg + 3.7%	Free	Free	Free	Free	Free	Free
6204.39.30	25.2%	22.4%	19.6%	16.8%	14%	11.2%	8.4%	5.6%	2.8%	Free
6204.39.60	1.6%	Free	Free	Free	Free	Free	Free	Free	Free	Free
6204.39.80	4.8%	3.2%	1.6%	Free	Free	Free	Free	Free	Free	Free
6204.41.10	5.5%	3.7%	1.8%	Free	Free	Free	Free	Free	Free	Free
6204.41.20	12%	9%	6%	3%	Free	Free	Free	Free	Free	Free
6204.42.10	9.6%	7.2%	4.8%	2.4%	Free	Free	Free	Free	Free	Free
6204.42.20	4.2%	2.8%	1.4%	Free	Free	Free	Free	Free	Free	Free
6204.42.30	8%	6%	4%	2%	Free	Free	Free	Free	Free	Free
6204.43.10	9.2%	6.9%	4.6%	2.3%	Free	Free	Free	Free	Free	Free
6204.43.20	5.4%	3.6%	1.8%	Free	Free	Free	Free	Free	Free	Free
6204.43.30	12.5%	9.4%	6.2%	3.1%	Free	Free	Free	Free	Free	Free
6204.43.40	13.1%	9.8%	6.5%	3.2%	Free	Free	Free	Free	Free	Free
6204.44.20	9.2%	6.9%	4.6%	2.3%	Free	Free	Free	Free	Free	Free
6204.44.30	9.5%	7.1%	4.7%	2.3%	Free	Free	Free	Free	Free	Free
6204.44.40	13.1%	9.8%	6.5%	3.2%	Free	Free	Free	Free	Free	Free
6204.49.10	5.3%	3.5%	1.7%	Free	Free	Free	Free	Free	Free	Free
6204.49.50	5.3%	3.5%	1.7%	Free	Free	Free	Free	Free	Free	Free
6204.51.00	12.1%	9.1%	6%	3%	Free	Free	Free	Free	Free	Free
6204.52.10	6.1%	4.1%	2%	Free	Free	Free	Free	Free	Free	Free
6204.52.20	6.3%	4.2%	2.1%	Free	Free	Free	Free	Free	Free	Free
6204.53.10	9.2%	6.9%	4.6%	2.3%	Free	Free	Free	Free	Free	Free
6204.53.20	12.5%	9.4%	6.2%	3.1%	Free	Free	Free	Free	Free	Free
6204.53.30	13.1%	9.8%	6.5%	3.2%	Free	Free	Free	Free	Free	Free
6204.59.10	9.2%	6.9%	4.6%	2.3%	Free	Free	Free	Free	Free	Free
6204.59.20	12.5%	9.4%	6.2%	3.1%	Free	Free	Free	Free	Free	Free
6204.59.30	13.1%	9.8%	6.5%	3.2%	Free	Free	Free	Free	Free	Free
6204.59.40	5.1%	3.4%	1.7%	Free	Free	Free	Free	Free	Free	Free
6204.61.10	5.7%	3.8%	1.9%	Free	Free	Free	Free	Free	Free	Free
6204.61.90	12%	9%	6%	3%	Free	Free	Free	Free	Free	Free

Annex II (continued)
-128-

HTS Subheading	December 17, 2001	2002	2003	2004	2005	2006	2007	2008	2009	2010
6204.62.20	6.8%	4.5%	2.2%	Free	Free	Free	Free	Free	Free	Free
6204.62.30	5.4%	3.6%	1.8%	Free	Free	Free	Free	Free	Free	Free
6204.62.40	13.6%	10.2%	6.8%	3.4%	Free	Free	Free	Free	Free	Free
6204.63.12	5.4%	3.6%	1.8%	Free	Free	Free	Free	Free	Free	Free
6204.63.15	12.5%	9.4%	6.2%	3.1%	Free	Free	Free	Free	Free	Free
6204.63.20	9.2%	6.9%	4.6%	2.3%	Free	Free	Free	Free	Free	Free
6204.63.25	12%	9%	6%	3%	Free	Free	Free	Free	Free	Free
6204.63.30	5.4%	3.6%	1.8%	Free	Free	Free	Free	Free	Free	Free
6204.63.35	26.3%	23.4%	20.5%	17.5%	14.6%	11.7%	8.7%	5.8%	2.9%	Free
6204.69.10	12%	9%	6%	3%	Free	Free	Free	Free	Free	Free
6204.69.20	12%	9%	6%	3%	Free	Free	Free	Free	Free	Free
6204.69.25	26.3%	23.4%	20.5%	17.5%	14.6%	11.7%	8.7%	5.8%	2.9%	Free
6204.69.40	1.8%	Free	Free	Free	Free	Free	Free	Free	Free	Free
6204.69.60	5.4%	3.6%	1.8%	Free	Free	Free	Free	Free	Free	Free
6204.69.90	1.4%	Free	Free	Free	Free	Free	Free	Free	Free	Free
6205.10.10	7%	4.7%	2.3%	Free	Free	Free	Free	Free	Free	Free
6205.10.20	16.9¢/kg + 15.1%	12.7¢/kg + 11.3%	8.4¢/kg + 7.5%	4.2¢/kg + 3.7%	Free	Free	Free	Free	Free	Free
6205.20.10	6.6%	4.4%	2.2%	Free	Free	Free	Free	Free	Free	Free
6205.20.20	18.1%	16.1%	14.1%	12.1%	10.1%	8%	6%	4%	2%	Free
6205.30.10	10%	7.5%	5%	2.5%	Free	Free	Free	Free	Free	Free
6205.30.15	45.8¢/kg + 18.1%	40.7¢/kg + 16.1%	35.6¢/kg + 14.1%	30.5¢/kg + 12.1%	25.4¢/kg + 10.1%	20.3¢/kg + 8%	15.2¢/kg + 6%	10.1¢/kg + 4%	5¢/kg + 2%	Free
6205.30.20	26.8¢/kg + 23.8%	23.8¢/kg + 21.2%	20.8¢/kg + 18.5%	17.8¢/kg + 15.9%	14.9¢/kg + 13.2%	11.9¢/kg + 10.6%	8.9¢/kg + 7.9%	5.9¢/kg + 5.3%	2.9¢/kg + 2.6%	Free
6205.90.10	1.8%	Free	Free	Free	Free	Free	Free	Free	Free	Free
6205.90.30	5.4%	3.6%	1.8%	Free	Free	Free	Free	Free	Free	Free
6205.90.40	1.4%	Free	Free	Free	Free	Free	Free	Free	Free	Free
6206.10.00	5.3%	3.5%	1.7%	Free	Free	Free	Free	Free	Free	Free
6206.20.10	9.5%	7.1%	4.7%	2.3%	Free	Free	Free	Free	Free	Free
6206.20.20	5.4%	3.6%	1.8%	Free	Free	Free	Free	Free	Free	Free

Annex II (continued)
-129-

HTS Subheading	December 17, 2001	2002	2003	2004	2005	2006	2007	2008	2009	2010
6206.20.30	26.4¢/kg + 14.8%	19.8¢/kg + 11.1%	13.2¢/kg + 7.4%	6.6¢/kg + 3.7%	Free	Free	Free	Free	Free	Free
6206.30.10	6.9%	4.6%	2.3%	Free	Free	Free	Free	Free	Free	Free
6206.30.20	1.8%	Free	Free	Free	Free	Free	Free	Free	Free	Free
6206.30.30	12.6%	9.4%	6.3%	3.1%	Free	Free	Free	Free	Free	Free
6206.40.10	9.2%	6.9%	4.6%	2.3%	Free	Free	Free	Free	Free	Free
6206.40.20	4.2%	2.8%	1.4%	Free	Free	Free	Free	Free	Free	Free
6206.40.25	53.5¢/kg + 13.6%	40.1¢/kg + 10.2%	26.7¢/kg + 6.8%	13.3¢/kg + 3.4%	Free	Free	Free	Free	Free	Free
6206.40.30	24.8%	22%	19.3%	16.5%	13.8%	11%	8.2%	5.5%	2.7%	Free
6206.90.00	5.1%	3.4%	1.7%	Free	Free	Free	Free	Free	Free	Free
6207.11.00	4.7%	3.1%	1.5%	Free	Free	Free	Free	Free	Free	Free
6207.19.10	4.1%	2.7%	1.3%	Free	Free	Free	Free	Free	Free	Free
6207.19.90	8.6%	6.4%	4.3%	2.1%	Free	Free	Free	Free	Free	Free
6207.21.00	6.8%	4.5%	2.2%	Free	Free	Free	Free	Free	Free	Free
6207.22.00	13.1%	9.8%	6.5%	3.2%	Free	Free	Free	Free	Free	Free
6207.29.10	1.8%	Free	Free	Free	Free	Free	Free	Free	Free	Free
6207.29.90	5.4%	3.6%	1.8%	Free	Free	Free	Free	Free	Free	Free
6207.91.10	6.6%	4.4%	2.2%	Free	Free	Free	Free	Free	Free	Free
6207.91.30	4.7%	3.1%	1.5%	Free	Free	Free	Free	Free	Free	Free
6207.92.20	12.5%	9.4%	6.2%	3.1%	Free	Free	Free	Free	Free	Free
6207.92.40	8.6%	6.4%	4.3%	2.1%	Free	Free	Free	Free	Free	Free
6207.99.20	9.5%	7.1%	4.7%	2.3%	Free	Free	Free	Free	Free	Free
6207.99.40	4.7%	3.1%	1.5%	Free	Free	Free	Free	Free	Free	Free
6207.99.70	1.8%	Free	Free	Free	Free	Free	Free	Free	Free	Free
6207.99.90	5.4%	3.6%	1.8%	Free	Free	Free	Free	Free	Free	Free
6208.11.00	12.5%	9.4%	6.2%	3.1%	Free	Free	Free	Free	Free	Free
6208.19.20	9.2%	6.9%	4.6%	2.3%	Free	Free	Free	Free	Free	Free
6208.19.50	2.3%	Free	Free	Free	Free	Free	Free	Free	Free	Free
6208.19.90	6.6%	4.4%	2.2%	Free	Free	Free	Free	Free	Free	Free
6208.21.00	6.8%	4.5%	2.2%	Free	Free	Free	Free	Free	Free	Free
6208.22.00	13.1%	9.8%	6.5%	3.2%	Free	Free	Free	Free	Free	Free

Annex II (continued)
-130-

HTS Subheading	December 17, 2001	2002	2003	2004	2005	2006	2007	2008	2009	2010
6208.29.10	1.8%	Free	Free	Free	Free	Free	Free	Free	Free	Free
6208.29.90	5.4%	3.6%	1.8%	Free	Free	Free	Free	Free	Free	Free
6208.91.10	5.9%	3.9%	1.9%	Free	Free	Free	Free	Free	Free	Free
6208.91.30	9.2%	6.9%	4.6%	2.3%	Free	Free	Free	Free	Free	Free
6208.92.00	13.1%	9.8%	6.5%	3.2%	Free	Free	Free	Free	Free	Free
6208.99.20	9.5%	7.1%	4.7%	2.3%	Free	Free	Free	Free	Free	Free
6208.99.30	1.8%	Free	Free	Free	Free	Free	Free	Free	Free	Free
6208.99.50	5.4%	3.6%	1.8%	Free	Free	Free	Free	Free	Free	Free
6208.99.80	1.4%	Free	Free	Free	Free	Free	Free	Free	Free	Free
6209.10.00	30¢/kg + 13.6%	22.5¢/kg + 10.2%	15¢/kg + 6.8%	7.5¢/kg + 3.4%	Free	Free	Free	Free	Free	Free
6209.20.10	9.6%	7.2%	4.8%	2.4%	Free	Free	Free	Free	Free	Free
6209.20.20	12.4%	9.3%	6.2%	3.1%	Free	Free	Free	Free	Free	Free
6209.20.30	12.8%	9.6%	6.4%	3.2%	Free	Free	Free	Free	Free	Free
6209.20.50	7.1%	4.7%	2.3%	Free	Free	Free	Free	Free	Free	Free
6209.30.10	22.1%	19.6%	17.2%	14.7%	12.3%	9.8%	7.3%	4.9%	2.4%	Free
6209.30.20	26.3%	23.4%	20.5%	17.5%	14.6%	11.7%	8.7%	5.8%	2.9%	Free
6209.30.30	13.1%	9.8%	6.5%	3.2%	Free	Free	Free	Free	Free	Free
6209.90.10	22.1%	19.6%	17.2%	14.7%	12.3%	9.8%	7.3%	4.9%	2.4%	Free
6209.90.20	18.9%	16.8%	14.7%	12.6%	10.5%	8.4%	6.3%	4.2%	2.1%	Free
6209.90.30	12.5%	9.4%	6.2%	3.1%	Free	Free	Free	Free	Free	Free
6209.90.90	1.4%	Free	Free	Free	Free	Free	Free	Free	Free	Free
6210.10.20	1.9%	Free	Free	Free	Free	Free	Free	Free	Free	Free
6210.10.70	9.5%	7.1%	4.7%	2.3%	Free	Free	Free	Free	Free	Free
6210.10.90	13.1%	9.8%	6.5%	3.2%	Free	Free	Free	Free	Free	Free
6210.20.30	3.9%	2.6%	1.3%	Free	Free	Free	Free	Free	Free	Free
6210.20.50	5.4%	3.6%	1.8%	Free	Free	Free	Free	Free	Free	Free
6210.20.70	2.3%	Free	Free	Free	Free	Free	Free	Free	Free	Free
6210.20.90	4.8%	3.2%	1.6%	Free	Free	Free	Free	Free	Free	Free
6210.30.30	3.9%	2.6%	1.3%	Free	Free	Free	Free	Free	Free	Free
6210.30.50	5.4%	3.6%	1.8%	Free	Free	Free	Free	Free	Free	Free
6210.30.70	2.3%	Free	Free	Free	Free	Free	Free	Free	Free	Free

Annex II (continued)
-131-

HTS Subheading	December 17, 2001	2002	2003	2004	2005	2006	2007	2008	2009	2010
6210.30.90	4.8%	3.2%	1.6%	Free	Free	Free	Free	Free	Free	Free
6210.40.30	3.9%	2.6%	1.3%	Free	Free	Free	Free	Free	Free	Free
6210.40.50	5.4%	3.6%	1.8%	Free	Free	Free	Free	Free	Free	Free
6210.40.70	2.3%	Free	Free	Free	Free	Free	Free	Free	Free	Free
6210.40.90	4.8%	3.2%	1.6%	Free	Free	Free	Free	Free	Free	Free
6210.50.30	3.9%	2.6%	1.3%	Free	Free	Free	Free	Free	Free	Free
6210.50.50	5.4%	3.6%	1.8%	Free	Free	Free	Free	Free	Free	Free
6210.50.70	2.3%	Free	Free	Free	Free	Free	Free	Free	Free	Free
6210.50.90	4.8%	3.2%	1.6%	Free	Free	Free	Free	Free	Free	Free
6211.11.10	25.6%	22.8%	19.9%	17.1%	14.2%	11.4%	8.5%	5.7%	2.8%	Free
6211.11.40	4.2%	2.8%	1.4%	Free	Free	Free	Free	Free	Free	Free
6211.11.80	5.7%	3.8%	1.9%	Free	Free	Free	Free	Free	Free	Free
6211.12.10	13.2%	9.9%	6.6%	3.3%	Free	Free	Free	Free	Free	Free
6211.12.40	1.9%	Free	Free	Free	Free	Free	Free	Free	Free	Free
6211.12.80	5.7%	3.8%	1.9%	Free	Free	Free	Free	Free	Free	Free
6211.20.04	1.1%	Free	Free	Free	Free	Free	Free	Free	Free	Free
6211.20.08	2.2%	Free	Free	Free	Free	Free	Free	Free	Free	Free
6211.20.15	5.4%	3.6%	1.8%	Free	Free	Free	Free	Free	Free	Free
6211.20.24	20%	17.8%	15.6%	13.3%	11.1%	8.9%	6.6%	4.4%	2.2%	Free
6211.20.28	25.5%	22.7%	19.8%	17%	14.2%	11.3%	8.5%	5.6%	2.8%	Free
6211.20.34	20.2%	18%	15.7%	13.5%	11.2%	9%	6.7%	4.5%	2.2%	Free
6211.20.38	25.9%	23%	20.1%	17.2%	14.4%	11.5%	8.6%	5.7%	2.8%	Free
6211.20.44	12.1%	9.1%	6%	3%	Free	Free	Free	Free	Free	Free
6211.20.48	12.5%	9.4%	6.2%	3.1%	Free	Free	Free	Free	Free	Free
6211.20.54	20.1%	17.9%	15.6%	13.4%	11.2%	8.9%	6.7%	4.4%	2.2%	Free
6211.20.58	25.8%	22.9%	20%	17.2%	14.3%	11.4%	8.6%	5.7%	2.8%	Free
6211.20.64	20.4%	18.1%	15.8%	13.6%	11.3%	9%	6.8%	4.5%	2.2%	Free
6211.20.68	26.3%	23.4%	20.5%	17.5%	14.6%	11.7%	8.7%	5.8%	2.9%	Free
6211.20.74	12.1%	9.1%	6%	3%	Free	Free	Free	Free	Free	Free
6211.20.78	12.5%	9.4%	6.2%	3.1%	Free	Free	Free	Free	Free	Free
6211.31.00	11.2%	8.4%	5.6%	2.8%	Free	Free	Free	Free	Free	Free

Annex II (continued)
-132-

HTS Subheading	December 17, 2001	2002	2003	2004	2005	2006	2007	2008	2009	2010
6211.32.00	6.2%	4.1%	2%	Free	Free	Free	Free	Free	Free	Free
6211.33.00	13.1%	9.8%	6.5%	3.2%	Free	Free	Free	Free	Free	Free
6211.39.10	0.7%	Free	Free	Free	Free	Free	Free	Free	Free	Free
6211.39.90	1.4%	Free	Free	Free	Free	Free	Free	Free	Free	Free
6211.41.00	11.2%	8.4%	5.6%	2.8%	Free	Free	Free	Free	Free	Free
6211.42.00	6.2%	4.1%	2%	Free	Free	Free	Free	Free	Free	Free
6211.43.00	13.1%	9.8%	6.5%	3.2%	Free	Free	Free	Free	Free	Free
6211.49.10	1.9%	Free	Free	Free	Free	Free	Free	Free	Free	Free
6211.49.90	5.6%	3.7%	1.8%	Free	Free	Free	Free	Free	Free	Free
6212.10.30	12.5%	9.4%	6.2%	3.1%	Free	Free	Free	Free	Free	Free
6212.10.50	13.8%	10.3%	6.9%	3.4%	Free	Free	Free	Free	Free	Free
6212.10.70	6.6%	4.4%	2.2%	Free	Free	Free	Free	Free	Free	Free
6212.10.90	13.8%	10.3%	6.9%	3.4%	Free	Free	Free	Free	Free	Free
6212.20.00	19.8%	17.6%	15.4%	13.2%	11%	8.8%	6.6%	4.4%	2.2%	Free
6212.30.00	21.6%	19.2%	16.8%	14.4%	12%	9.6%	7.2%	4.8%	2.4%	Free
6212.90.00	5.1%	3.4%	1.7%	Free	Free	Free	Free	Free	Free	Free
6213.10.10	1.8%	Free	Free	Free	Free	Free	Free	Free	Free	Free
6213.10.20	3.9%	2.6%	1.3%	Free	Free	Free	Free	Free	Free	Free
6213.20.10	10.8%	8.1%	5.4%	2.7%	Free	Free	Free	Free	Free	Free
6213.20.20	5.4%	3.6%	1.8%	Free	Free	Free	Free	Free	Free	Free
6213.90.10	8.8%	6.6%	4.4%	2.2%	Free	Free	Free	Free	Free	Free
6213.90.20	5.6%	3.7%	1.8%	Free	Free	Free	Free	Free	Free	Free
6214.10.10	0.6%	Free	Free	Free	Free	Free	Free	Free	Free	Free
6214.10.20	1.9%	Free	Free	Free	Free	Free	Free	Free	Free	Free
6214.20.00	5%	3.3%	1.6%	Free	Free	Free	Free	Free	Free	Free
6214.30.00	3.9%	2.6%	1.3%	Free	Free	Free	Free	Free	Free	Free
6214.40.00	3.9%	2.6%	1.3%	Free	Free	Free	Free	Free	Free	Free
6214.90.00	9%	6.7%	4.5%	2.2%	Free	Free	Free	Free	Free	Free
6215.10.00	5.6%	3.7%	1.8%	Free	Free	Free	Free	Free	Free	Free
6215.20.00	20.4¢/kg + 10.4%	15.3¢/kg + 7.8%	10.2¢/kg + 5.2%	5.1¢/kg + 2.6%	Free	Free	Free	Free	Free	Free
6215.90.00	4.6%	3.1%	1.5%	Free	Free	Free	Free	Free	Free	Free

Annex II (continued)
-133-

HTS Subheading	December 17, 2001	2002	2003	2004	2005	2006	2007	2008	2009	2010
6216.00.08	1.3%	Free	Free	Free	Free	Free	Free	Free	Free	Free
6216.00.13	14%	10.5%	7%	3.5%	Free	Free	Free	Free	Free	Free
6216.00.17	21.6%	19.2%	16.8%	14.4%	12%	9.6%	7.2%	4.8%	2.4%	Free
6216.00.19	12.4¢/kg + 6.1%	9.3¢/kg + 4.6%	6.2¢/kg + 3%	3.1¢/kg + 1.5%	Free	Free	Free	Free	Free	Free
6216.00.21	16.9¢/kg + 8.4%	12.7¢/kg + 6.3%	8.4¢/kg + 4.2%	4.2¢/kg + 2.1%	Free	Free	Free	Free	Free	Free
6216.00.24	10.8%	8.1%	5.4%	2.7%	Free	Free	Free	Free	Free	Free
6216.00.26	7.3%	4.9%	2.4%	Free	Free	Free	Free	Free	Free	Free
6216.00.29	10.8%	8.1%	5.4%	2.7%	Free	Free	Free	Free	Free	Free
6216.00.31	7.3%	4.9%	2.4%	Free	Free	Free	Free	Free	Free	Free
6216.00.35	1.9%	Free	Free	Free	Free	Free	Free	Free	Free	Free
6216.00.38	21.6%	19.2%	16.8%	14.4%	12%	9.6%	7.2%	4.8%	2.4%	Free
6216.00.41	21.6%	19.2%	16.8%	14.4%	12%	9.6%	7.2%	4.8%	2.4%	Free
6216.00.46	1.9%	Free	Free	Free	Free	Free	Free	Free	Free	Free
6216.00.54	16.9¢/kg + 8.4%	12.7¢/kg + 6.3%	8.4¢/kg + 4.2%	4.2¢/kg + 2.1%	Free	Free	Free	Free	Free	Free
6216.00.58	16.9¢/kg + 8.4%	12.7¢/kg + 6.3%	8.4¢/kg + 4.2%	4.2¢/kg + 2.1%	Free	Free	Free	Free	Free	Free
6216.00.80	1.8%	Free	Free	Free	Free	Free	Free	Free	Free	Free
6216.00.90	1.9%	Free	Free	Free	Free	Free	Free	Free	Free	Free
6217.10.10	5.7%	3.8%	1.9%	Free	Free	Free	Free	Free	Free	Free
6217.10.85	12%	9%	6%	3%	Free	Free	Free	Free	Free	Free
6217.10.95	12%	9%	6%	3%	Free	Free	Free	Free	Free	Free
6217.90.10	5.7%	3.8%	1.9%	Free	Free	Free	Free	Free	Free	Free
6217.90.90	12%	9%	6%	3%	Free	Free	Free	Free	Free	Free
6301.10.00	9.6%	7.2%	4.8%	2.4%	Free	Free	Free	Free	Free	Free
6301.30.00	6.6%	4.4%	2.2%	Free	Free	Free	Free	Free	Free	Free
6301.40.00	8.2%	6.1%	4.1%	2%	Free	Free	Free	Free	Free	Free
6301.90.00	7.5%	5%	2.5%	Free	Free	Free	Free	Free	Free	Free
6302.10.00	4.9%	3.3%	1.6%	Free	Free	Free	Free	Free	Free	Free
6302.21.30	13.3%	10%	6.6%	3.3%	Free	Free	Free	Free	Free	Free

Annex II (continued)
-134-

HTS Subheading	December 17, 2001	2002	2003	2004	2005	2006	2007	2008	2009	2010
6302.21.50	19.8%	17.6%	15.4%	13.2%	11%	8.8%	6.6%	4.4%	2.2%	Free
6302.21.70	2.2%	Free	Free	Free	Free	Free	Free	Free	Free	Free
6302.21.90	5.3%	3.5%	1.7%	Free	Free	Free	Free	Free	Free	Free
6302.22.10	12.5%	9.4%	6.2%	3.1%	Free	Free	Free	Free	Free	Free
6302.22.20	9.6%	7.2%	4.8%	2.4%	Free	Free	Free	Free	Free	Free
6302.29.00	4.7%	3.1%	1.5%	Free	Free	Free	Free	Free	Free	Free
6302.31.30	13.3%	10%	6.6%	3.3%	Free	Free	Free	Free	Free	Free
6302.31.50	19.8%	17.6%	15.4%	13.2%	11%	8.8%	6.6%	4.4%	2.2%	Free
6302.31.70	3.9%	2.6%	1.3%	Free	Free	Free	Free	Free	Free	Free
6302.31.90	5.3%	3.5%	1.7%	Free	Free	Free	Free	Free	Free	Free
6302.32.10	12.5%	9.4%	6.2%	3.1%	Free	Free	Free	Free	Free	Free
6302.32.20	9.6%	7.2%	4.8%	2.4%	Free	Free	Free	Free	Free	Free
6302.39.00	4.5%	3%	1.5%	Free	Free	Free	Free	Free	Free	Free
6302.40.10	6.7%	4.5%	2.2%	Free	Free	Free	Free	Free	Free	Free
6302.40.20	5.4%	3.6%	1.8%	Free	Free	Free	Free	Free	Free	Free
6302.51.10	4.8%	3.2%	1.6%	Free	Free	Free	Free	Free	Free	Free
6302.51.20	3.8%	2.5%	1.2%	Free	Free	Free	Free	Free	Free	Free
6302.51.30	4.5%	3%	1.5%	Free	Free	Free	Free	Free	Free	Free
6302.51.40	5%	3.3%	1.6%	Free	Free	Free	Free	Free	Free	Free
6302.52.10	5.3%	3.5%	1.7%	Free	Free	Free	Free	Free	Free	Free
6302.53.00	9.5%	7.1%	4.7%	2.3%	Free	Free	Free	Free	Free	Free
6302.59.00	6.9%	4.6%	2.3%	Free	Free	Free	Free	Free	Free	Free
6302.60.00	7.2%	4.8%	2.4%	Free	Free	Free	Free	Free	Free	Free
6302.91.00	7.2%	4.8%	2.4%	Free	Free	Free	Free	Free	Free	Free
6302.93.10	4.8%	3.2%	1.6%	Free	Free	Free	Free	Free	Free	Free
6302.93.20	8.4%	6.3%	4.2%	2.1%	Free	Free	Free	Free	Free	Free
6302.99.10	1.9%	Free	Free	Free	Free	Free	Free	Free	Free	Free
6302.99.20	6.6%	4.4%	2.2%	Free	Free	Free	Free	Free	Free	Free
6303.11.00	8.7%	6.5%	4.3%	2.1%	Free	Free	Free	Free	Free	Free
6303.12.00	9.5%	7.1%	4.7%	2.3%	Free	Free	Free	Free	Free	Free
6303.19.00	6.7%	4.5%	2.2%	Free	Free	Free	Free	Free	Free	Free

Annex II (continued)
-135-

HTS Subheading	December 17, 2001	2002	2003	2004	2005	2006	2007	2008	2009	2010
6303.91.00	8.7%	6.5%	4.3%	2.1%	Free	Free	Free	Free	Free	Free
6303.92.10	9.5%	7.1%	4.7%	2.3%	Free	Free	Free	Free	Free	Free
6303.92.20	9.5%	7.1%	4.7%	2.3%	Free	Free	Free	Free	Free	Free
6303.99.00	9.5%	7.1%	4.7%	2.3%	Free	Free	Free	Free	Free	Free
6304.11.10	10%	7.5%	5%	2.5%	Free	Free	Free	Free	Free	Free
6304.11.20	6.8%	4.5%	2.2%	Free	Free	Free	Free	Free	Free	Free
6304.11.30	6.1%	4.1%	2%	Free	Free	Free	Free	Free	Free	Free
6304.19.05	10%	7.5%	5%	2.5%	Free	Free	Free	Free	Free	Free
6304.19.10	2.3%	Free	Free	Free	Free	Free	Free	Free	Free	Free
6304.19.15	12.5%	9.4%	6.2%	3.1%	Free	Free	Free	Free	Free	Free
6304.19.20	6.8%	4.5%	2.2%	Free	Free	Free	Free	Free	Free	Free
6304.19.30	6.6%	4.4%	2.2%	Free	Free	Free	Free	Free	Free	Free
6304.91.00	6%	4%	2%	Free	Free	Free	Free	Free	Free	Free
6304.92.00	5%	3.3%	1.6%	Free	Free	Free	Free	Free	Free	Free
6304.93.00	7.3%	4.9%	2.4%	Free	Free	Free	Free	Free	Free	Free
6304.99.10	3.9%	2.6%	1.3%	Free	Free	Free	Free	Free	Free	Free
6304.99.15	9.5%	7.1%	4.7%	2.3%	Free	Free	Free	Free	Free	Free
6304.99.25	9.5%	7.1%	4.7%	2.3%	Free	Free	Free	Free	Free	Free
6304.99.35	9.5%	7.1%	4.7%	2.3%	Free	Free	Free	Free	Free	Free
6304.99.40	3.9%	2.6%	1.3%	Free	Free	Free	Free	Free	Free	Free
6304.99.60	2.2%	Free	Free	Free	Free	Free	Free	Free	Free	Free
6305.20.00	4.8%	3.2%	1.6%	Free	Free	Free	Free	Free	Free	Free
6305.32.00	6.6%	4.4%	2.2%	Free	Free	Free	Free	Free	Free	Free
6305.33.00	6.6%	4.4%	2.2%	Free	Free	Free	Free	Free	Free	Free
6305.39.00	6.6%	4.4%	2.2%	Free	Free	Free	Free	Free	Free	Free
6305.90.00	4.8%	3.2%	1.6%	Free	Free	Free	Free	Free	Free	Free
6306.11.00	8.9%	6.7%	4.4%	2.2%	Free	Free	Free	Free	Free	Free
6306.12.00	6.9%	4.6%	2.3%	Free	Free	Free	Free	Free	Free	Free
6306.19.00	4%	2.7%	1.3%	Free	Free	Free	Free	Free	Free	Free
6306.21.00	8.9%	6.7%	4.4%	2.2%	Free	Free	Free	Free	Free	Free
6306.22.90	6.9%	4.6%	2.3%	Free	Free	Free	Free	Free	Free	Free

Annex II (continued)
-136-

HTS Subheading	December 17, 2001	2002	2003	2004	2005	2006	2007	2008	2009	2010
6306.29.00	2%	Free	Free	Free	Free	Free	Free	Free	Free	Free
6306.41.00	1.9%	Free	Free	Free	Free	Free	Free	Free	Free	Free
6306.49.00	1.9%	Free	Free	Free	Free	Free	Free	Free	Free	Free
6306.91.00	2.4%	Free	Free	Free	Free	Free	Free	Free	Free	Free
6306.99.00	4.7%	3.1%	1.5%	Free	Free	Free	Free	Free	Free	Free
6307.10.10	2.1%	Free	Free	Free	Free	Free	Free	Free	Free	Free
6307.10.20	5.5%	3.7%	1.8%	Free	Free	Free	Free	Free	Free	Free
6307.20.00	4.7%	3.1%	1.5%	Free	Free	Free	Free	Free	Free	Free
6307.90.30	6.2%	4.1%	2%	Free	Free	Free	Free	Free	Free	Free
6307.90.72	4.7%	3.1%	1.5%	Free	Free	Free	Free	Free	Free	Free
6307.90.75	4.5%	3%	1.5%	Free	Free	Free	Free	Free	Free	Free
6307.90.85	6%	4%	2%	Free	Free	Free	Free	Free	Free	Free
6307.90.89	5.2%	3.5%	1.7%	Free	Free	Free	Free	Free	Free	Free
6307.90.99	5.2%	3.5%	1.7%	Free	Free	Free	Free	Free	Free	Free
6308.00.00	9.6%	7.2%	4.8%	2.4%	Free	Free	Free	Free	Free	Free
6310.90.10	2.9¢/kg	Free	Free	Free	Free	Free	Free	Free	Free	Free
6401.10.00	33.7%	30%	26.2%	22.5%	18.7%	15%	11.2%	7.5%	3.7%	Free
6401.91.00	33.7%	30%	26.2%	22.5%	18.7%	15%	11.2%	7.5%	3.7%	Free
6401.92.60	2.3%	Free	Free	Free	Free	Free	Free	Free	Free	Free
6401.92.90	33.7%	30%	26.2%	22.5%	18.7%	15%	11.2%	7.5%	3.7%	Free
6401.99.30	22.5%	20%	17.5%	15%	12.5%	10%	7.5%	5%	2.5%	Free
6401.99.60	33.7%	30%	26.2%	22.5%	18.7%	15%	11.2%	7.5%	3.7%	Free
6401.99.90	33.7%	30%	26.2%	22.5%	18.7%	15%	11.2%	7.5%	3.7%	Free
6402.19.05	4.5%	3%	1.5%	Free	Free	Free	Free	Free	Free	Free
6402.19.15	3.8%	2.5%	1.2%	Free	Free	Free	Free	Free	Free	Free
6402.19.50	68.4¢/kg + 28.8%	60.8¢/kg + 25.6%	53.2¢/kg + 22.4%	45.6¢/kg + 19.2%	38¢/kg + 16%	30.4¢/kg + 12.8%	22.8¢/kg + 9.6%	15.2¢/kg + 6.4%	7.6¢/kg + 3.2%	Free
6402.19.70	68.4¢/kg + 15.3%	60.8¢/kg + 13.6%	53.2¢/kg + 11.9%	45.6¢/kg + 10.2%	38¢/kg + 8.5%	30.4¢/kg + 6.8%	22.8¢/kg + 5.1%	15.2¢/kg + 3.4%	7.6¢/kg + 1.7%	Free
6402.19.90	6.7%	4.5%	2.2%	Free	Free	Free	Free	Free	Free	Free
6402.30.30	4.5%	3%	1.5%	Free	Free	Free	Free	Free	Free	Free
6402.30.50	33.7%	30%	26.2%	22.5%	18.7%	15%	11.2%	7.5%	3.7%	Free

Annex II (continued)
-137-

HTS Subheading	December 17, 2001	2002	2003	2004	2005	2006	2007	2008	2009	2010
6402.30.60	21.6%	19.2%	16.8%	14.4%	12%	9.6%	7.2%	4.8%	2.4%	Free
6402.30.70	81¢/kg + 33.7%	72¢/kg + 30%	63¢/kg + 26.2%	54¢/kg + 22.5%	45¢/kg + 18.7%	36¢/kg + 15%	27¢/kg + 11.2%	18¢/kg + 7.5%	9¢/kg + 3.7%	Free
6402.30.80	81¢/kg + 18%	72¢/kg + 16%	63¢/kg + 14%	54¢/kg + 12%	45¢/kg + 10%	36¢/kg + 8%	27¢/kg + 6%	18¢/kg + 4%	9¢/kg + 2%	Free
6402.30.90	16%	12%	8%	4%	Free	Free	Free	Free	Free	Free
6402.91.40	4.5%	3%	1.5%	Free	Free	Free	Free	Free	Free	Free
6402.91.50	33.7%	30%	26.2%	22.5%	18.7%	15%	11.2%	7.5%	3.7%	Free
6402.91.60	43.2%	38.4%	33.6%	28.8%	24%	19.2%	14.4%	9.6%	4.8%	Free
6402.91.70	81¢/kg + 33.7%	72¢/kg + 30%	63¢/kg + 26.2%	54¢/kg + 22.5%	45¢/kg + 18.7%	36¢/kg + 15%	27¢/kg + 11.2%	18¢/kg + 7.5%	9¢/kg + 3.7%	Free
6402.91.80	81¢/kg + 18%	72¢/kg + 16%	63¢/kg + 14%	54¢/kg + 12%	45¢/kg + 10%	36¢/kg + 8%	27¢/kg + 6%	18¢/kg + 4%	9¢/kg + 2%	Free
6402.91.90	16%	12%	8%	4%	Free	Free	Free	Free	Free	Free
6402.99.05	6%	4%	2%	Free	Free	Free	Free	Free	Free	Free
6402.99.10	10%	7.5%	5%	2.5%	Free	Free	Free	Free	Free	Free
6402.99.14	1.5%	Free	Free	Free	Free	Free	Free	Free	Free	Free
6402.99.18	4.5%	3%	1.5%	Free	Free	Free	Free	Free	Free	Free
6402.99.20	33.7%	30%	26.2%	22.5%	18.7%	15%	11.2%	7.5%	3.7%	Free
6402.99.30	33.7%	30%	26.2%	22.5%	18.7%	15%	11.2%	7.5%	3.7%	Free
6402.99.60	43.2%	38.4%	33.6%	28.8%	24%	19.2%	14.4%	9.6%	4.8%	Free
6402.99.70	81¢/kg + 33.7%	72¢/kg + 30%	63¢/kg + 26.2%	54¢/kg + 22.5%	45¢/kg + 18.7%	36¢/kg + 15%	27¢/kg + 11.2%	18¢/kg + 7.5%	9¢/kg + 3.7%	Free
6402.99.80	81¢/kg + 18%	72¢/kg + 16%	63¢/kg + 14%	54¢/kg + 12%	45¢/kg + 10%	36¢/kg + 8%	27¢/kg + 6%	18¢/kg + 4%	9¢/kg + 2%	Free
6402.99.90	16%	12%	8%	4%	Free	Free	Free	Free	Free	Free
6403.19.10	2.5%	Free	Free	Free	Free	Free	Free	Free	Free	Free
6403.19.30	6.3%	4.2%	2.1%	Free	Free	Free	Free	Free	Free	Free
6403.19.40	2.1%	Free	Free	Free	Free	Free	Free	Free	Free	Free
6403.19.50	7.5%	5%	2.5%	Free	Free	Free	Free	Free	Free	Free
6403.40.30	2.5%	Free	Free	Free	Free	Free	Free	Free	Free	Free
6403.40.60	6.3%	4.2%	2.1%	Free	Free	Free	Free	Free	Free	Free
6403.51.30	2.5%	Free	Free	Free	Free	Free	Free	Free	Free	Free
6403.51.60	6.3%	4.2%	2.1%	Free	Free	Free	Free	Free	Free	Free
6403.51.90	7.5%	5%	2.5%	Free	Free	Free	Free	Free	Free	Free

Annex II (continued)
-138-

HTS Subheading	December 17, 2001	2002	2003	2004	2005	2006	2007	2008	2009	2010
6403.59.15	1.2%	Free	Free	Free	Free	Free	Free	Free	Free	Free
6403.59.30	2.5%	Free	Free	Free	Free	Free	Free	Free	Free	Free
6403.59.60	6.3%	4.2%	2.1%	Free	Free	Free	Free	Free	Free	Free
6403.59.90	7.5%	5%	2.5%	Free	Free	Free	Free	Free	Free	Free
6403.91.30	2.5%	Free	Free	Free	Free	Free	Free	Free	Free	Free
6403.91.60	6.3%	4.2%	2.1%	Free	Free	Free	Free	Free	Free	Free
6403.91.90	7.5%	5%	2.5%	Free	Free	Free	Free	Free	Free	Free
6403.99.20	6%	4%	2%	Free	Free	Free	Free	Free	Free	Free
6403.99.40	2.5%	Free	Free	Free	Free	Free	Free	Free	Free	Free
6403.99.60	6.3%	4.2%	2.1%	Free	Free	Free	Free	Free	Free	Free
6403.99.75	5.2%	3.5%	1.7%	Free	Free	Free	Free	Free	Free	Free
6403.99.90	7.5%	5%	2.5%	Free	Free	Free	Free	Free	Free	Free
6404.11.20	8.4%	6.3%	4.2%	2.1%	Free	Free	Free	Free	Free	Free
6404.11.40	33.7%	30%	26.2%	22.5%	18.7%	15%	11.2%	7.5%	3.7%	Free
6404.11.50	43.2%	38.4%	33.6%	28.8%	24%	19.2%	14.4%	9.6%	4.8%	Free
6404.11.60	33.7%	30%	26.2%	22.5%	18.7%	15%	11.2%	7.5%	3.7%	Free
6404.11.70	81¢/kg + 33.7%	72¢/kg + 30%	63¢/kg + 26.2%	54¢/kg + 22.5%	45¢/kg + 18.7%	36¢/kg + 15%	27¢/kg + 11.2%	18¢/kg + 7.5%	9¢/kg + 3.7%	Free
6404.11.80	81¢/kg + 18%	72¢/kg + 16%	63¢/kg + 14%	54¢/kg + 12%	45¢/kg + 10%	36¢/kg + 8%	27¢/kg + 6%	18¢/kg + 4%	9¢/kg + 2%	Free
6404.11.90	16%	12%	8%	4%	Free	Free	Free	Free	Free	Free
6404.19.15	8.4%	6.3%	4.2%	2.1%	Free	Free	Free	Free	Free	Free
6404.19.20	33.7%	30%	26.2%	22.5%	18.7%	15%	11.2%	7.5%	3.7%	Free
6404.19.25	5.6%	3.7%	1.8%	Free	Free	Free	Free	Free	Free	Free
6404.19.30	10%	7.5%	5%	2.5%	Free	Free	Free	Free	Free	Free
6404.19.35	33.7%	30%	26.2%	22.5%	18.7%	15%	11.2%	7.5%	3.7%	Free
6404.19.40	33.7%	30%	26.2%	22.5%	18.7%	15%	11.2%	7.5%	3.7%	Free
6404.19.50	43.2%	38.4%	33.6%	28.8%	24%	19.2%	14.4%	9.6%	4.8%	Free
6404.19.60	33.7%	30%	26.2%	22.5%	18.7%	15%	11.2%	7.5%	3.7%	Free
6404.19.70	81¢/kg + 33.7%	72¢/kg + 30%	63¢/kg + 26.2%	54¢/kg + 22.5%	45¢/kg + 18.7%	36¢/kg + 15%	27¢/kg + 11.2%	18¢/kg + 7.5%	9¢/kg + 3.7%	Free
6404.19.80	81¢/kg + 18%	72¢/kg + 16%	63¢/kg + 14%	54¢/kg + 12%	45¢/kg + 10%	36¢/kg + 8%	27¢/kg + 6%	18¢/kg + 4%	9¢/kg + 2%	Free
6404.19.90	6.7%	4.5%	2.2%	Free	Free	Free	Free	Free	Free	Free

Annex II (continued)
-139-

HTS Subheading	December 17, 2001	2002	2003	2004	2005	2006	2007	2008	2009	2010
6404.20.20	12%	9%	6%	3%	Free	Free	Free	Free	Free	Free
6404.20.40	7.5%	5%	2.5%	Free	Free	Free	Free	Free	Free	Free
6404.20.60	33.7%	30%	26.2%	22.5%	18.7%	15%	11.2%	7.5%	3.7%	Free
6405.10.00	7.5%	5%	2.5%	Free	Free	Free	Free	Free	Free	Free
6405.20.30	5.6%	3.7%	1.8%	Free	Free	Free	Free	Free	Free	Free
6405.20.60	1.3%	Free	Free	Free	Free	Free	Free	Free	Free	Free
6405.20.90	10%	7.5%	5%	2.5%	Free	Free	Free	Free	Free	Free
6405.90.20	1.9%	Free	Free	Free	Free	Free	Free	Free	Free	Free
6405.90.90	10%	7.5%	5%	2.5%	Free	Free	Free	Free	Free	Free
6406.10.05	6.3%	4.2%	2.1%	Free	Free	Free	Free	Free	Free	Free
6406.10.10	7.5%	5%	2.5%	Free	Free	Free	Free	Free	Free	Free
6406.10.20	8.4%	6.3%	4.2%	2.1%	Free	Free	Free	Free	Free	Free
6406.10.25	30.2%	26.8%	23.5%	20.1%	16.8%	13.4%	10%	6.7%	3.3%	Free
6406.10.30	56.7¢/kg + 23.5%	50.4¢/kg + 20.9%	44.1¢/kg + 18.3%	37.8¢/kg + 15.7%	31.5¢/kg + 13.1%	25.2¢/kg + 10.4%	18.9¢/kg + 7.8%	12.6¢/kg + 5.2%	6.3¢/kg + 2.6%	Free
6406.10.35	55.8¢/kg + 12.3%	49.6¢/kg + 10.9%	43.4¢/kg + 9.5%	37.2¢/kg + 8.2%	31¢/kg + 6.8%	24.8¢/kg + 5.4%	18.6¢/kg + 4.1%	12.4¢/kg + 2.7%	6.2¢/kg + 1.3%	Free
6406.10.40	5.6%	3.7%	1.8%	Free	Free	Free	Free	Free	Free	Free
6406.10.45	4.5%	3%	1.5%	Free	Free	Free	Free	Free	Free	Free
6406.10.50	23.5%	20.9%	18.3%	15.7%	13.1%	10.4%	7.8%	5.2%	2.6%	Free
6406.10.72	8.9%	6.7%	4.4%	2.2%	Free	Free	Free	Free	Free	Free
6406.10.77	8.9%	6.7%	4.4%	2.2%	Free	Free	Free	Free	Free	Free
6406.10.85	4.7%	3.1%	1.5%	Free	Free	Free	Free	Free	Free	Free
6406.10.90	4.7%	3.1%	1.5%	Free	Free	Free	Free	Free	Free	Free
6406.20.00	1.3%	Free	Free	Free	Free	Free	Free	Free	Free	Free
6406.91.00	1.3%	Free	Free	Free	Free	Free	Free	Free	Free	Free
6406.99.15	12.5%	9.4%	6.2%	3.1%	Free	Free	Free	Free	Free	Free
6406.99.30	3.9%	2.6%	1.3%	Free	Free	Free	Free	Free	Free	Free
6501.00.60	48¢/doz. + 0.7%	Free	Free	Free	Free	Free	Free	Free	Free	Free
6501.00.90	8.4¢/kg + 8.4%	6.3¢/kg + 6.3%	4.2¢/kg + 4.2%	2.1¢/kg + 2.1%	Free	Free	Free	Free	Free	Free

Annex II (continued)
-140-

HTS Subheading	December 17, 2001	2002	2003	2004	2005	2006	2007	2008	2009	2010
6502.00.20	25.5¢/doz. + 2.5%	17¢/doz. + 1.7%	8.5¢/doz. + 0.8%	Free	Free	Free	Free	Free	Free	Free
6502.00.40	2%	Free	Free	Free	Free	Free	Free	Free	Free	Free
6502.00.90	5.2%	3.5%	1.7%	Free	Free	Free	Free	Free	Free	Free
6503.00.90	10.3¢/kg + 4.8% + 1.4¢/article	6.9¢/kg + 3.2% + 0.9¢/article	3.4¢/kg + 1.6% + 0.4¢/article	Free	Free	Free	Free	Free	Free	Free
6504.00.30	4.6%	3.1%	1.5%	Free	Free	Free	Free	Free	Free	Free
6504.00.60	77.7¢/doz. + 3.8%	58.3¢/doz. + 2.8%	38.8¢/doz.+ 1.9%	19.4¢/doz. 0.9%	Free	Free	Free	Free	Free	Free
6504.00.90	5.2%	3.5%	1.7%	Free	Free	Free	Free	Free	Free	Free
6505.10.00	7.2%	4.8%	2.4%	Free	Free	Free	Free	Free	Free	Free
6505.90.15	6%	4%	2%	Free	Free	Free	Free	Free	Free	Free
6505.90.20	5.7%	3.8%	1.9%	Free	Free	Free	Free	Free	Free	Free
6505.90.25	5.7%	3.8%	1.9%	Free	Free	Free	Free	Free	Free	Free
6505.90.30	28.4¢/kg + 8.6%	21.3¢/kg + 6.4%	14.2¢/kg + 4.3%	7.1¢/kg + 2.1%	Free	Free	Free	Free	Free	Free
6505.90.40	23.8¢/kg + 6%	15.9¢/kg + 4%	7.9¢/kg + 2%	Free	Free	Free	Free	Free	Free	Free
6505.90.50	5.2%	3.5%	1.7%	Free	Free	Free	Free	Free	Free	Free
6505.90.60	22.3¢/kg + 7.8%	16.7¢/kg + 5.8%	11.1¢/kg + 3.9%	5.5¢/kg + 1.9%	Free	Free	Free	Free	Free	Free
6505.90.70	5.2%	3.5%	1.7%	Free	Free	Free	Free	Free	Free	Free
6505.90.80	15¢/kg + 5.4%	10¢/kg + 3.6%	5¢/kg + 1.8%	Free	Free	Free	Free	Free	Free	Free
6505.90.90	15.9¢/kg + 5.7%	10.6¢/kg + 3.8%	5.3¢/kg + 1.9%	Free	Free	Free	Free	Free	Free	Free
6506.92.00	1.6%	Free	Free	Free	Free	Free	Free	Free	Free	Free
6506.99.00	6.3%	4.2%	2.1%	Free	Free	Free	Free	Free	Free	Free
6601.10.00	4.8%	3.2%	1.6%	Free	Free	Free	Free	Free	Free	Free
6601.99.00	6.1%	4.1%	2%	Free	Free	Free	Free	Free	Free	Free
6602.00.00	2%	Free	Free	Free	Free	Free	Free	Free	Free	Free
6603.10.80	3.9%	2.6%	1.3%	Free	Free	Free	Free	Free	Free	Free
6603.20.90	9.6%	7.2%	4.8%	2.4%	Free	Free	Free	Free	Free	Free
6603.90.80	3.9%	2.6%	1.3%	Free	Free	Free	Free	Free	Free	Free

Annex II (continued)
-141-

HTS Subheading	December 17, 2001	2002	2003	2004	2005	2006	2007	2008	2009	2010
6701.00.30	2.3%	Free	Free	Free	Free	Free	Free	Free	Free	Free
6701.00.60	2.3%	Free	Free	Free	Free	Free	Free	Free	Free	Free
6702.10.20	6.3%	4.2%	2.1%	Free	Free	Free	Free	Free	Free	Free
6702.10.40	1.7%	Free	Free	Free	Free	Free	Free	Free	Free	Free
6702.90.10	2.3%	Free	Free	Free	Free	Free	Free	Free	Free	Free
6702.90.35	6.7%	4.5%	2.2%	Free	Free	Free	Free	Free	Free	Free
6702.90.65	13.6%	10.2%	6.8%	3.4%	Free	Free	Free	Free	Free	Free
6801.00.00	1.4%	Free	Free	Free	Free	Free	Free	Free	Free	Free
6802.21.10	2.1%	Free	Free	Free	Free	Free	Free	Free	Free	Free
6802.21.50	0.9%	Free	Free	Free	Free	Free	Free	Free	Free	Free
6802.22.00	2.4%	Free	Free	Free	Free	Free	Free	Free	Free	Free
6802.23.00	1.8%	Free	Free	Free	Free	Free	Free	Free	Free	Free
6802.29.00	3%	Free	Free	Free	Free	Free	Free	Free	Free	Free
6802.91.20	2.1%	Free	Free	Free	Free	Free	Free	Free	Free	Free
6802.91.25	1.8%	Free	Free	Free	Free	Free	Free	Free	Free	Free
6802.91.30	2.3%	Free	Free	Free	Free	Free	Free	Free	Free	Free
6802.93.00	1.8%	Free	Free	Free	Free	Free	Free	Free	Free	Free
6802.99.00	3.2%	Free	Free	Free	Free	Free	Free	Free	Free	Free
6803.00.10	1.6%	Free	Free	Free	Free	Free	Free	Free	Free	Free
6804.22.10	2.5¢/kg + 1%	Free	Free	Free	Free	Free	Free	Free	Free	Free
6806.10.00	1.9%	Free	Free	Free	Free	Free	Free	Free	Free	Free
6807.90.00	1.3%	Free	Free	Free	Free	Free	Free	Free	Free	Free
6809.19.00	1.5%	Free	Free	Free	Free	Free	Free	Free	Free	Free
6810.11.00	1.6%	Free	Free	Free	Free	Free	Free	Free	Free	Free
6810.19.12	2.4%	Free	Free	Free	Free	Free	Free	Free	Free	Free
6810.19.14	6.7%	4.5%	2.2%	Free	Free	Free	Free	Free	Free	Free
6810.19.50	1.9%	Free	Free	Free	Free	Free	Free	Free	Free	Free
6812.50.10	6.2%	4.1%	2%	Free	Free	Free	Free	Free	Free	Free
6814.10.00	1.3%	Free	Free	Free	Free	Free	Free	Free	Free	Free
6814.90.00	1.3%	Free	Free	Free	Free	Free	Free	Free	Free	Free
6905.10.00	10.8%	8.1%	5.4%	2.7%	Free	Free	Free	Free	Free	Free

Annex II (continued)
-142-

HTS Subheading	December 17, 2001	2002	2003	2004	2005	2006	2007	2008	2009	2010
6905.90.00	1.6%	Free	Free	Free	Free	Free	Free	Free	Free	Free
6907.10.00	11.2%	8.4%	5.6%	2.8%	Free	Free	Free	Free	Free	Free
6907.90.00	11.2%	8.4%	5.6%	2.8%	Free	Free	Free	Free	Free	Free
6908.10.10	11.2%	8.4%	5.6%	2.8%	Free	Free	Free	Free	Free	Free
6908.10.20	11.2%	8.4%	5.6%	2.8%	Free	Free	Free	Free	Free	Free
6908.10.50	10.1%	7.6%	5%	2.5%	Free	Free	Free	Free	Free	Free
6908.90.00	10.1%	7.6%	5%	2.5%	Free	Free	Free	Free	Free	Free
6909.11.40	2.2%	Free	Free	Free	Free	Free	Free	Free	Free	Free
6909.12.00	2%	Free	Free	Free	Free	Free	Free	Free	Free	Free
6909.19.50	2%	Free	Free	Free	Free	Free	Free	Free	Free	Free
6909.90.00	2%	Free	Free	Free	Free	Free	Free	Free	Free	Free
6910.10.00	4.3%	2.9%	1.4%	Free	Free	Free	Free	Free	Free	Free
6910.90.00	4.2%	2.8%	1.4%	Free	Free	Free	Free	Free	Free	Free
6911.10.10	26.1%	23.2%	20.3%	17.4%	14.5%	11.6%	8.7%	5.8%	2.9%	Free
6911.10.15	4%	Free	Free	Free	Free	Free	Free	Free	Free	Free
6911.10.25	3%	Free	Free	Free	Free	Free	Free	Free	Free	Free
6911.10.35	20.8%	15.6%	10.4%	5.2%	Free	Free	Free	Free	Free	Free
6911.10.37	4%	Free	Free	Free	Free	Free	Free	Free	Free	Free
6911.10.38	3%	Free	Free	Free	Free	Free	Free	Free	Free	Free
6911.10.41	3.1%	Free	Free	Free	Free	Free	Free	Free	Free	Free
6911.10.45	11.5%	7.7%	3.8%	Free	Free	Free	Free	Free	Free	Free
6911.10.52	4%	Free	Free	Free	Free	Free	Free	Free	Free	Free
6911.10.58	3%	Free	Free	Free	Free	Free	Free	Free	Free	Free
6911.10.60	18.3%	13.7%	9.1%	4.5%	Free	Free	Free	Free	Free	Free
6911.10.80	18.3%	13.7%	9.1%	4.5%	Free	Free	Free	Free	Free	Free
6911.90.00	2.7%	Free	Free	Free	Free	Free	Free	Free	Free	Free
6912.00.10	0.3%	Free	Free	Free	Free	Free	Free	Free	Free	Free
6912.00.20	27.7%	24.6%	21.5%	18.4%	15.4%	12.3%	9.2%	6.1%	3%	Free
6912.00.35	4.9%	Free	Free	Free	Free	Free	Free	Free	Free	Free
6912.00.39	2.2%	Free	Free	Free	Free	Free	Free	Free	Free	Free
6912.00.41	1.9%	Free	Free	Free	Free	Free	Free	Free	Free	Free

Annex II (continued)
-143-

HTS Subheading	December 17, 2001	2002	2003	2004	2005	2006	2007	2008	2009	2010
6912.00.44	5%	Free	Free	Free	Free	Free	Free	Free	Free	Free
6912.00.45	2.2%	Free	Free	Free	Free	Free	Free	Free	Free	Free
6912.00.46	4.9%	Free	Free	Free	Free	Free	Free	Free	Free	Free
6912.00.48	4.9%	Free	Free	Free	Free	Free	Free	Free	Free	Free
6912.00.50	3%	Free	Free	Free	Free	Free	Free	Free	Free	Free
6913.10.20	1.6%	Free	Free	Free	Free	Free	Free	Free	Free	Free
6914.10.80	4.5%	Free	Free	Free	Free	Free	Free	Free	Free	Free
6914.90.80	2.8%	Free	Free	Free	Free	Free	Free	Free	Free	Free
7001.00.20	1.5%	Free	Free	Free	Free	Free	Free	Free	Free	Free
7002.10.10	1.9%	Free	Free	Free	Free	Free	Free	Free	Free	Free
7002.20.50	4.5%	3%	1.5%	Free	Free	Free	Free	Free	Free	Free
7002.32.00	4.5%	3%	1.5%	Free	Free	Free	Free	Free	Free	Free
7002.39.00	4.5%	3%	1.5%	Free	Free	Free	Free	Free	Free	Free
7003.12.00	0.7%	Free	Free	Free	Free	Free	Free	Free	Free	Free
7003.19.00	0.6%	Free	Free	Free	Free	Free	Free	Free	Free	Free
7003.20.00	0.5%	Free	Free	Free	Free	Free	Free	Free	Free	Free
7003.30.00	4.7%	3.1%	1.5%	Free	Free	Free	Free	Free	Free	Free
7004.20.20	0.5¢/kg + 0.8%	Free	Free	Free	Free	Free	Free	Free	Free	Free
7004.20.50	5.4%	3.6%	1.8%	Free	Free	Free	Free	Free	Free	Free
7004.90.25	0.3¢/kg	Free	Free	Free	Free	Free	Free	Free	Free	Free
7004.90.50	2.5%	Free	Free	Free	Free	Free	Free	Free	Free	Free
7005.10.80	2.2%	Free	Free	Free	Free	Free	Free	Free	Free	Free
7005.21.10	7.2¢/m^2 + 0.2%	Free	Free	Free	Free	Free	Free	Free	Free	Free
7005.21.20	4.2%	2.8%	1.4%	Free	Free	Free	Free	Free	Free	Free
7005.29.08	9.3¢/m^2	Free	Free	Free	Free	Free	Free	Free	Free	Free
7005.29.18	10.8¢/m^2	7.2¢/m^2	3.6¢/m^2	Free	Free	Free	Free	Free	Free	Free
7005.29.25	2.4%	Free	Free	Free	Free	Free	Free	Free	Free	Free
7005.30.00	14.5¢/m^2	Free	Free	Free	Free	Free	Free	Free	Free	Free
7006.00.10	6.6%	4.4%	2.2%	Free	Free	Free	Free	Free	Free	Free
7006.00.20	4.8%	3.2%	1.6%	Free	Free	Free	Free	Free	Free	Free
7006.00.40	2.4%	Free	Free	Free	Free	Free	Free	Free	Free	Free

Annex II (continued)
-144-

HTS Subheading	December 17, 2001	2002	2003	2004	2005	2006	2007	2008	2009	2010
7007.11.00	4.1%	2.7%	1.3%	Free	Free	Free	Free	Free	Free	Free
7007.19.00	2.5%	Free	Free	Free	Free	Free	Free	Free	Free	Free
7007.21.10	2.4%	Free	Free	Free	Free	Free	Free	Free	Free	Free
7007.21.50	2.4%	Free	Free	Free	Free	Free	Free	Free	Free	Free
7007.29.00	2.4%	Free	Free	Free	Free	Free	Free	Free	Free	Free
7008.00.00	1.9%	Free	Free	Free	Free	Free	Free	Free	Free	Free
7009.10.00	1.9%	Free	Free	Free	Free	Free	Free	Free	Free	Free
7009.91.10	5.8%	3.9%	1.9%	Free	Free	Free	Free	Free	Free	Free
7009.91.50	4.8%	3.2%	1.6%	Free	Free	Free	Free	Free	Free	Free
7009.92.10	5.8%	3.9%	1.9%	Free	Free	Free	Free	Free	Free	Free
7009.92.50	4.8%	3.2%	1.6%	Free	Free	Free	Free	Free	Free	Free
7010.20.20	1.2%	Free	Free	Free	Free	Free	Free	Free	Free	Free
7010.20.30	3.9%	2.6%	1.3%	Free	Free	Free	Free	Free	Free	Free
7010.91.20	1.2%	Free	Free	Free	Free	Free	Free	Free	Free	Free
7010.91.30	3.9%	2.6%	1.3%	Free	Free	Free	Free	Free	Free	Free
7010.92.20	1.2%	Free	Free	Free	Free	Free	Free	Free	Free	Free
7010.92.30	3.9%	2.6%	1.3%	Free	Free	Free	Free	Free	Free	Free
7010.93.20	1.2%	Free	Free	Free	Free	Free	Free	Free	Free	Free
7010.93.30	3.9%	2.6%	1.3%	Free	Free	Free	Free	Free	Free	Free
7010.94.20	1.2%	Free	Free	Free	Free	Free	Free	Free	Free	Free
7010.94.30	3.9%	2.6%	1.3%	Free	Free	Free	Free	Free	Free	Free
7011.10.50	2.3%	Free	Free	Free	Free	Free	Free	Free	Free	Free
7011.20.10	3.9%	2.6%	1.3%	Free	Free	Free	Free	Free	Free	Free
7011.20.80	3.9%	2.6%	1.3%	Free	Free	Free	Free	Free	Free	Free
7011.90.00	4.9%	3.3%	1.6%	Free	Free	Free	Free	Free	Free	Free
7012.00.00	4.9%	3.3%	1.6%	Free	Free	Free	Free	Free	Free	Free
7013.10.10	5.1%	3.4%	1.7%	Free	Free	Free	Free	Free	Free	Free
7013.10.50	23.4%	20.8	18.2%	15.6%	13%	10.4%	7.8%	5.2%	2.6%	Free
7013.21.10	13.6%	10.2%	6.8%	3.4%	Free	Free	Free	Free	Free	Free
7013.21.20	11.2%	8.4%	5.6%	2.8%	Free	Free	Free	Free	Free	Free
7013.21.30	5.4%	3.6%	1.8%	Free	Free	Free	Free	Free	Free	Free

Annex II (continued)
-145-

HTS Subheading	December 17, 2001	2002	2003	2004	2005	2006	2007	2008	2009	2010
7013.21.50	1.5%	Free	Free	Free	Free	Free	Free	Free	Free	Free
7013.29.05	10%	7.5%	5%	2.5%	Free	Free	Free	Free	Free	Free
7013.29.10	29%	25.8%	22.6%	19.3%	16.1%	12.9%	9.6%	6.4%	3.2%	Free
7013.29.20	22.9%	20.4%	17.8%	15.3%	12.7%	10.2%	7.6%	5.1%	2.5%	Free
7013.29.30	9%	6.7%	4.5%	2.2%	Free	Free	Free	Free	Free	Free
7013.29.40	2.5%	Free	Free	Free	Free	Free	Free	Free	Free	Free
7013.29.50	8.4%	6.3%	4.2%	2.1%	Free	Free	Free	Free	Free	Free
7013.29.60	2.5%	Free	Free	Free	Free	Free	Free	Free	Free	Free
7013.31.10	13.6%	10.2%	6.8%	3.4%	Free	Free	Free	Free	Free	Free
7013.31.20	11.2%	8.4%	5.6%	2.8%	Free	Free	Free	Free	Free	Free
7013.31.30	8.4%	6.3%	4.2%	2.1%	Free	Free	Free	Free	Free	Free
7013.31.50	4.5%	3%	1.5%	Free	Free	Free	Free	Free	Free	Free
7013.32.10	10%	7.5%	5%	2.5%	Free	Free	Free	Free	Free	Free
7013.32.20	22.9%	20.4%	17.8%	15.3%	12.7%	10.2%	7.6%	5.1%	2.5%	Free
7013.32.30	10.2%	7.6%	5.1%	2.5%	Free	Free	Free	Free	Free	Free
7013.32.40	5.4%	3.6%	1.8%	Free	Free	Free	Free	Free	Free	Free
7013.39.10	10%	7.5%	5%	2.5%	Free	Free	Free	Free	Free	Free
7013.39.20	22.9%	20.4%	17.8%	15.3%	12.7%	10.2%	7.6%	5.1%	2.5%	Free
7013.39.30	10.2%	7.6%	5.1%	2.5%	Free	Free	Free	Free	Free	Free
7013.39.40	5.4%	3.6%	1.8%	Free	Free	Free	Free	Free	Free	Free
7013.39.50	12%	9%	6%	3%	Free	Free	Free	Free	Free	Free
7013.39.60	5.4%	3.6%	1.8%	Free	Free	Free	Free	Free	Free	Free
7013.91.10	16%	12%	8%	4%	Free	Free	Free	Free	Free	Free
7013.91.20	11.2%	8.4%	5.6%	2.8%	Free	Free	Free	Free	Free	Free
7013.91.30	8.4%	6.3%	4.2%	2.1%	Free	Free	Free	Free	Free	Free
7013.91.50	4.5%	3%	1.5%	Free	Free	Free	Free	Free	Free	Free
7013.99.10	13.6%	10.2%	6.8%	3.4%	Free	Free	Free	Free	Free	Free
7013.99.20	10%	7.5%	5%	2.5%	Free	Free	Free	Free	Free	Free
7013.99.30	6.7%	4.5%	2.2%	Free	Free	Free	Free	Free	Free	Free
7013.99.35	4.9%	3.3%	1.6%	Free	Free	Free	Free	Free	Free	Free
7013.99.40	34.2%	30.4%	26.6%	22.8%	19%	15.2%	11.4%	7.6%	3.8%	Free

Annex II (continued)
-146-

HTS Subheading	December 17, 2001	2002	2003	2004	2005	2006	2007	2008	2009	2010
7013.99.50	27%	24%	21%	18%	15%	12%	9%	6%	3%	Free
7013.99.60	12%	9%	6%	3%	Free	Free	Free	Free	Free	Free
7013.99.70	5.4%	3.6%	1.8%	Free	Free	Free	Free	Free	Free	Free
7013.99.80	10.2%	7.6%	5.1%	2.5%	Free	Free	Free	Free	Free	Free
7013.99.90	5.4%	3.6%	1.8%	Free	Free	Free	Free	Free	Free	Free
7014.00.10	2%	Free	Free	Free	Free	Free	Free	Free	Free	Free
7014.00.20	2.5%	Free	Free	Free	Free	Free	Free	Free	Free	Free
7014.00.30	1.7%	Free	Free	Free	Free	Free	Free	Free	Free	Free
7014.00.50	1.6%	Free	Free	Free	Free	Free	Free	Free	Free	Free
7016.10.00	1.3%	Free	Free	Free	Free	Free	Free	Free	Free	Free
7016.90.10	6%	4%	2%	Free	Free	Free	Free	Free	Free	Free
7016.90.50	2.5%	Free	Free	Free	Free	Free	Free	Free	Free	Free
7017.10.60	2.3%	Free	Free	Free	Free	Free	Free	Free	Free	Free
7017.20.00	5%	3.3%	1.6%	Free	Free	Free	Free	Free	Free	Free
7017.90.50	5%	3.3%	1.6%	Free	Free	Free	Free	Free	Free	Free
7018.10.10	2%	Free	Free	Free	Free	Free	Free	Free	Free	Free
7018.20.00	2.5%	Free	Free	Free	Free	Free	Free	Free	Free	Free
7018.90.10	1.6%	Free	Free	Free	Free	Free	Free	Free	Free	Free
7018.90.50	4.9%	3.3%	1.6%	Free	Free	Free	Free	Free	Free	Free
7019.11.00	2.4%	Free	Free	Free	Free	Free	Free	Free	Free	Free
7019.12.00	2.4%	Free	Free	Free	Free	Free	Free	Free	Free	Free
7019.19.15	5.1%	3.4%	1.7%	Free	Free	Free	Free	Free	Free	Free
7019.19.28	6%	4%	2%	Free	Free	Free	Free	Free	Free	Free
7019.19.30	2.4%	Free	Free	Free	Free	Free	Free	Free	Free	Free
7019.19.90	2.1%	Free	Free	Free	Free	Free	Free	Free	Free	Free
7019.31.00	2.1%	Free	Free	Free	Free	Free	Free	Free	Free	Free
7019.32.00	2.1%	Free	Free	Free	Free	Free	Free	Free	Free	Free
7019.39.10	2.4%	Free	Free	Free	Free	Free	Free	Free	Free	Free
7019.39.50	2.4%	Free	Free	Free	Free	Free	Free	Free	Free	Free
7019.40.15	4.5%	3%	1.5%	Free	Free	Free	Free	Free	Free	Free
7019.40.40	5.7%	3.8%	1.9%	Free	Free	Free	Free	Free	Free	Free

Annex II (continued)
-147-

HTS Subheading	December 17, 2001	2002	2003	2004	2005	2006	2007	2008	2009	2010
7019.40.90	6.4%	4.3%	2.1%	Free	Free	Free	Free	Free	Free	Free
7019.51.90	4.5%	3%	1.5%	Free	Free	Free	Free	Free	Free	Free
7019.52.40	5.7%	3.8%	1.9%	Free	Free	Free	Free	Free	Free	Free
7019.52.90	6.4%	4.3%	2.1%	Free	Free	Free	Free	Free	Free	Free
7019.59.40	5.7%	3.8%	1.9%	Free	Free	Free	Free	Free	Free	Free
7019.59.90	6.4%	4.3%	2.1%	Free	Free	Free	Free	Free	Free	Free
7019.90.10	2.4%	Free	Free	Free	Free	Free	Free	Free	Free	Free
7019.90.50	2.1%	Free	Free	Free	Free	Free	Free	Free	Free	Free
7020.00.60	2.5%	Free	Free	Free	Free	Free	Free	Free	Free	Free
7103.10.40	8.4%	6.3%	4.2%	2.1%	Free	Free	Free	Free	Free	Free
7103.99.50	8.4%	6.3%	4.2%	2.1%	Free	Free	Free	Free	Free	Free
7104.10.00	1.5%	Free	Free	Free	Free	Free	Free	Free	Free	Free
7104.20.00	1.5%	Free	Free	Free	Free	Free	Free	Free	Free	Free
7104.90.50	4.8%	3.2%	1.6%	Free	Free	Free	Free	Free	Free	Free
7106.91.50	1.5%	Free	Free	Free	Free	Free	Free	Free	Free	Free
7106.92.50	1.5%	Free	Free	Free	Free	Free	Free	Free	Free	Free
7107.00.00	1.6%	Free	Free	Free	Free	Free	Free	Free	Free	Free
7108.12.50	2%	Free	Free	Free	Free	Free	Free	Free	Free	Free
7108.13.70	2%	Free	Free	Free	Free	Free	Free	Free	Free	Free
7109.00.00	4.5%	3%	1.5%	Free	Free	Free	Free	Free	Free	Free
7111.00.00	7.5%	5%	2.5%	Free	Free	Free	Free	Free	Free	Free
7113.11.10	3.1%	Free	Free	Free	Free	Free	Free	Free	Free	Free
7113.11.20	6.7%	Free	Free	Free	Free	Free	Free	Free	Free	Free
7113.19.10	3.5%	Free	Free	Free	Free	Free	Free	Free	Free	Free
7113.19.25	2.9%	Free	Free	Free	Free	Free	Free	Free	Free	Free
7113.19.30	2.9%	Free	Free	Free	Free	Free	Free	Free	Free	Free
7113.20.10	3.5%	Free	Free	Free	Free	Free	Free	Free	Free	Free
7113.20.21	2.9%	Free	Free	Free	Free	Free	Free	Free	Free	Free
7113.20.25	2.9%	Free	Free	Free	Free	Free	Free	Free	Free	Free
7113.20.29	2.6%	Free	Free	Free	Free	Free	Free	Free	Free	Free
7113.20.30	2.9%	Free	Free	Free	Free	Free	Free	Free	Free	Free

Annex II (continued)
-148-

HTS Subheading	December 17, 2001	2002	2003	2004	2005	2006	2007	2008	2009	2010
7113.20.50	2.6%	Free	Free	Free	Free	Free	Free	Free	Free	Free
7114.11.10	1.4%	Free	Free	Free	Free	Free	Free	Free	Free	Free
7114.11.20	1.3%	Free	Free	Free	Free	Free	Free	Free	Free	Free
7114.11.30	1.6%	Free	Free	Free	Free	Free	Free	Free	Free	Free
7114.11.40	1.7%	Free	Free	Free	Free	Free	Free	Free	Free	Free
7114.11.45	1.5%	Free	Free	Free	Free	Free	Free	Free	Free	Free
7114.11.50	1.6%	Free	Free	Free	Free	Free	Free	Free	Free	Free
7114.11.60	1.5%	Free	Free	Free	Free	Free	Free	Free	Free	Free
7114.11.70	1.5%	Free	Free	Free	Free	Free	Free	Free	Free	Free
7114.20.00	1.5%	Free	Free	Free	Free	Free	Free	Free	Free	Free
7115.10.00	2%	Free	Free	Free	Free	Free	Free	Free	Free	Free
7115.90.30	1.9%	Free	Free	Free	Free	Free	Free	Free	Free	Free
7115.90.40	1.5%	Free	Free	Free	Free	Free	Free	Free	Free	Free
7115.90.60	2%	Free	Free	Free	Free	Free	Free	Free	Free	Free
7116.10.10	1.6%	Free	Free	Free	Free	Free	Free	Free	Free	Free
7116.10.25	4.1%	2.7%	1.3%	Free	Free	Free	Free	Free	Free	Free
7116.20.05	1.6%	Free	Free	Free	Free	Free	Free	Free	Free	Free
7116.20.15	4.8%	3.2%	1.6%	Free	Free	Free	Free	Free	Free	Free
7116.20.30	1%	Free	Free	Free	Free	Free	Free	Free	Free	Free
7116.20.35	2.2%	Free	Free	Free	Free	Free	Free	Free	Free	Free
7116.20.40	8.4%	6.3%	4.2%	2.1%	Free	Free	Free	Free	Free	Free
7117.11.00	6%	4%	2%	Free	Free	Free	Free	Free	Free	Free
7117.19.15	6%	4%	2%	Free	Free	Free	Free	Free	Free	Free
7117.19.20	8.8%	6.6%	4.4%	2.2%	Free	Free	Free	Free	Free	Free
7117.19.30	1.9%	Free	Free	Free	Free	Free	Free	Free	Free	Free
7117.19.90	8.8%	6.6%	4.4%	2.2%	Free	Free	Free	Free	Free	Free
7117.90.20	1.6%	Free	Free	Free	Free	Free	Free	Free	Free	Free
7117.90.30	1.9%	Free	Free	Free	Free	Free	Free	Free	Free	Free
7117.90.55	5.4%	3.6%	1.8%	Free	Free	Free	Free	Free	Free	Free
7117.90.90	8.8%	6.6%	4.4%	2.2%	Free	Free	Free	Free	Free	Free
7202.11.10	0.7%	Free	Free	Free	Free	Free	Free	Free	Free	Free

Annex II (continued)
-149-

HTS Subheading	December 17, 2001	2002	2003	2004	2005	2006	2007	2008	2009	2010
7202.11.50	0.7%	Free	Free	Free	Free	Free	Free	Free	Free	Free
7202.19.10	1.1%	Free	Free	Free	Free	Free	Free	Free	Free	Free
7202.19.50	0.7%	Free	Free	Free	Free	Free	Free	Free	Free	Free
7202.21.10	0.5%	Free	Free	Free	Free	Free	Free	Free	Free	Free
7202.21.50	0.7%	Free	Free	Free	Free	Free	Free	Free	Free	Free
7202.21.75	0.9%	Free	Free	Free	Free	Free	Free	Free	Free	Free
7202.21.90	4.3%	2.9%	1.4%	Free	Free	Free	Free	Free	Free	Free
7202.30.00	1.9%	Free	Free	Free	Free	Free	Free	Free	Free	Free
7202.41.00	0.9%	Free	Free	Free	Free	Free	Free	Free	Free	Free
7202.49.10	0.9%	Free	Free	Free	Free	Free	Free	Free	Free	Free
7202.49.50	1.5%	Free	Free	Free	Free	Free	Free	Free	Free	Free
7202.50.00	7.5%	5%	2.5%	Free	Free	Free	Free	Free	Free	Free
7202.70.00	2.2%	Free	Free	Free	Free	Free	Free	Free	Free	Free
7202.80.00	4.2%	2.8%	1.4%	Free	Free	Free	Free	Free	Free	Free
7202.91.00	1.8%	Free	Free	Free	Free	Free	Free	Free	Free	Free
7202.92.00	2.1%	Free	Free	Free	Free	Free	Free	Free	Free	Free
7202.93.00	2.5%	Free	Free	Free	Free	Free	Free	Free	Free	Free
7202.99.10	2.1%	Free	Free	Free	Free	Free	Free	Free	Free	Free
7202.99.50	2.5%	Free	Free	Free	Free	Free	Free	Free	Free	Free
7307.11.00	2.4%	Free	Free	Free	Free	Free	Free	Free	Free	Free
7307.19.30	4.2%	2.8%	1.4%	Free	Free	Free	Free	Free	Free	Free
7307.19.90	4.6%	3.1%	1.5%	Free	Free	Free	Free	Free	Free	Free
7307.21.10	1.6%	Free	Free	Free	Free	Free	Free	Free	Free	Free
7307.21.50	4.2%	2.8%	1.4%	Free	Free	Free	Free	Free	Free	Free
7307.22.50	4.6%	3.1%	1.5%	Free	Free	Free	Free	Free	Free	Free
7307.23.00	2.5%	Free	Free	Free	Free	Free	Free	Free	Free	Free
7307.29.00	2.5%	Free	Free	Free	Free	Free	Free	Free	Free	Free
7307.91.10	1.6%	Free	Free	Free	Free	Free	Free	Free	Free	Free
7307.91.30	1.6%	Free	Free	Free	Free	Free	Free	Free	Free	Free
7307.91.50	4.1%	2.7%	1.3%	Free	Free	Free	Free	Free	Free	Free
7307.92.90	4.6%	3.1%	1.5%	Free	Free	Free	Free	Free	Free	Free

Annex II (continued)
-150-

HTS Subheading	December 17, 2001	2002	2003	2004	2005	2006	2007	2008	2009	2010
7307.93.30	4.6%	3.1%	1.5%	Free	Free	Free	Free	Free	Free	Free
7307.93.60	4.1%	2.7%	1.3%	Free	Free	Free	Free	Free	Free	Free
7307.93.90	2.1%	Free	Free	Free	Free	Free	Free	Free	Free	Free
7307.99.10	1.8%	Free	Free	Free	Free	Free	Free	Free	Free	Free
7307.99.30	1.6%	Free	Free	Free	Free	Free	Free	Free	Free	Free
7307.99.50	2.1%	Free	Free	Free	Free	Free	Free	Free	Free	Free
7315.89.10	0.7%	Free	Free	Free	Free	Free	Free	Free	Free	Free
7315.89.50	1.9%	Free	Free	Free	Free	Free	Free	Free	Free	Free
7315.90.00	1.4%	Free	Free	Free	Free	Free	Free	Free	Free	Free
7318.11.00	10%	7.5%	5%	2.5%	Free	Free	Free	Free	Free	Free
7318.12.00	10%	7.5%	5%	2.5%	Free	Free	Free	Free	Free	Free
7318.13.00	4.2%	2.8%	1.4%	Free	Free	Free	Free	Free	Free	Free
7318.14.10	4.6%	3.1%	1.5%	Free	Free	Free	Free	Free	Free	Free
7318.14.50	6.4%	4.3%	2.1%	Free	Free	Free	Free	Free	Free	Free
7318.15.60	4.6%	3.1%	1.5%	Free	Free	Free	Free	Free	Free	Free
7318.15.80	6.3%	4.2%	2.1%	Free	Free	Free	Free	Free	Free	Free
7318.19.00	4.2%	2.8%	1.4%	Free	Free	Free	Free	Free	Free	Free
7318.21.00	4.3%	2.9%	1.4%	Free	Free	Free	Free	Free	Free	Free
7318.24.00	1.9%	Free	Free	Free	Free	Free	Free	Free	Free	Free
7318.29.00	1.4%	Free	Free	Free	Free	Free	Free	Free	Free	Free
7319.20.00	2.2%	Free	Free	Free	Free	Free	Free	Free	Free	Free
7319.30.10	2%	Free	Free	Free	Free	Free	Free	Free	Free	Free
7319.90.00	1.4%	Free	Free	Free	Free	Free	Free	Free	Free	Free
7320.10.30	1.6%	Free	Free	Free	Free	Free	Free	Free	Free	Free
7320.10.60	1.6%	Free	Free	Free	Free	Free	Free	Free	Free	Free
7320.10.90	1.6%	Free	Free	Free	Free	Free	Free	Free	Free	Free
7320.20.10	1.6%	Free	Free	Free	Free	Free	Free	Free	Free	Free
7320.20.50	1.9%	Free	Free	Free	Free	Free	Free	Free	Free	Free
7320.90.50	1.4%	Free	Free	Free	Free	Free	Free	Free	Free	Free
7321.11.10	4.2%	2.8%	1.4%	Free	Free	Free	Free	Free	Free	Free
7321.81.10	1.4%	Free	Free	Free	Free	Free	Free	Free	Free	Free

Annex II (continued)
-151-

HTS Subheading	December 17, 2001	2002	2003	2004	2005	2006	2007	2008	2009	2010
7321.82.10	1.4%	Free	Free	Free	Free	Free	Free	Free	Free	Free
7323.91.50	3.9%	2.6%	1.3%	Free	Free	Free	Free	Free	Free	Free
7323.93.00	1%	Free	Free	Free	Free	Free	Free	Free	Free	Free
7323.94.00	1.3%	Free	Free	Free	Free	Free	Free	Free	Free	Free
7323.99.30	6.1%	4.1%	2%	Free	Free	Free	Free	Free	Free	Free
7323.99.70	3.9%	2.6%	1.3%	Free	Free	Free	Free	Free	Free	Free
7323.99.90	1.7%	Free	Free	Free	Free	Free	Free	Free	Free	Free
7324.10.00	1.7%	Free	Free	Free	Free	Free	Free	Free	Free	Free
7325.91.00	1.4%	Free	Free	Free	Free	Free	Free	Free	Free	Free
7325.99.50	1.4%	Free	Free	Free	Free	Free	Free	Free	Free	Free
7326.19.00	1.4%	Free	Free	Free	Free	Free	Free	Free	Free	Free
7326.20.00	1.9%	Free	Free	Free	Free	Free	Free	Free	Free	Free
7326.90.35	5.8%	3.9%	1.9%	Free	Free	Free	Free	Free	Free	Free
7326.90.60	6.4%	4.3%	2.1%	Free	Free	Free	Free	Free	Free	Free
7326.90.85	1.4%	Free	Free	Free	Free	Free	Free	Free	Free	Free
7403.11.00	0.5%	Free	Free	Free	Free	Free	Free	Free	Free	Free
7403.12.00	0.5%	Free	Free	Free	Free	Free	Free	Free	Free	Free
7403.13.00	0.5%	Free	Free	Free	Free	Free	Free	Free	Free	Free
7403.19.00	0.5%	Free	Free	Free	Free	Free	Free	Free	Free	Free
7403.21.00	0.5%	Free	Free	Free	Free	Free	Free	Free	Free	Free
7403.22.00	0.5%	Free	Free	Free	Free	Free	Free	Free	Free	Free
7403.23.00	0.5%	Free	Free	Free	Free	Free	Free	Free	Free	Free
7403.29.00	0.5%	Free	Free	Free	Free	Free	Free	Free	Free	Free
7407.10.15	1.5%	Free	Free	Free	Free	Free	Free	Free	Free	Free
7407.10.30	1.5%	Free	Free	Free	Free	Free	Free	Free	Free	Free
7407.10.50	0.5%	Free	Free	Free	Free	Free	Free	Free	Free	Free
7407.21.15	1.1%	Free	Free	Free	Free	Free	Free	Free	Free	Free
7407.21.30	1.1%	Free	Free	Free	Free	Free	Free	Free	Free	Free
7407.21.50	1.1%	Free	Free	Free	Free	Free	Free	Free	Free	Free
7407.21.70	0.9%	Free	Free	Free	Free	Free	Free	Free	Free	Free
7407.21.90	1.1%	Free	Free	Free	Free	Free	Free	Free	Free	Free

Annex II (continued)
-152-

HTS Subheading	December 17, 2001	2002	2003	2004	2005	2006	2007	2008	2009	2010
7407.22.15	1.5%	Free	Free	Free	Free	Free	Free	Free	Free	Free
7407.22.30	1.5%	Free	Free	Free	Free	Free	Free	Free	Free	Free
7407.22.50	1.5%	Free	Free	Free	Free	Free	Free	Free	Free	Free
7407.29.15	1.5%	Free	Free	Free	Free	Free	Free	Free	Free	Free
7407.29.30	1.5%	Free	Free	Free	Free	Free	Free	Free	Free	Free
7407.29.50	0.8%	Free	Free	Free	Free	Free	Free	Free	Free	Free
7408.11.30	0.5%	Free	Free	Free	Free	Free	Free	Free	Free	Free
7408.11.60	1.5%	Free	Free	Free	Free	Free	Free	Free	Free	Free
7408.19.00	1.5%	Free	Free	Free	Free	Free	Free	Free	Free	Free
7408.21.00	1.5%	Free	Free	Free	Free	Free	Free	Free	Free	Free
7408.22.10	1.5%	Free	Free	Free	Free	Free	Free	Free	Free	Free
7408.22.50	1.5%	Free	Free	Free	Free	Free	Free	Free	Free	Free
7408.29.10	1.5%	Free	Free	Free	Free	Free	Free	Free	Free	Free
7408.29.50	1.5%	Free	Free	Free	Free	Free	Free	Free	Free	Free
7409.11.10	1.5%	Free	Free	Free	Free	Free	Free	Free	Free	Free
7409.11.50	0.5%	Free	Free	Free	Free	Free	Free	Free	Free	Free
7409.19.10	1.5%	Free	Free	Free	Free	Free	Free	Free	Free	Free
7409.19.50	0.5%	Free	Free	Free	Free	Free	Free	Free	Free	Free
7409.19.90	1.5%	Free	Free	Free	Free	Free	Free	Free	Free	Free
7409.21.00	0.9%	Free	Free	Free	Free	Free	Free	Free	Free	Free
7409.29.00	0.9%	Free	Free	Free	Free	Free	Free	Free	Free	Free
7409.31.10	1.5%	Free	Free	Free	Free	Free	Free	Free	Free	Free
7409.31.50	0.8%	Free	Free	Free	Free	Free	Free	Free	Free	Free
7409.31.90	1.5%	Free	Free	Free	Free	Free	Free	Free	Free	Free
7409.39.10	1.5%	Free	Free	Free	Free	Free	Free	Free	Free	Free
7409.39.50	0.8%	Free	Free	Free	Free	Free	Free	Free	Free	Free
7409.39.90	1.5%	Free	Free	Free	Free	Free	Free	Free	Free	Free
7409.40.00	1.5%	Free	Free	Free	Free	Free	Free	Free	Free	Free
7409.90.10	1.5%	Free	Free	Free	Free	Free	Free	Free	Free	Free
7409.90.50	0.8%	Free	Free	Free	Free	Free	Free	Free	Free	Free
7409.90.90	1.5%	Free	Free	Free	Free	Free	Free	Free	Free	Free

Annex II (continued)
-153-

HTS Subheading	December 17, 2001	2002	2003	2004	2005	2006	2007	2008	2009	2010
7410.11.00	0.5%	Free	Free	Free	Free	Free	Free	Free	Free	Free
7410.12.00	0.5%	Free	Free	Free	Free	Free	Free	Free	Free	Free
7410.21.30	1.5%	Free	Free	Free	Free	Free	Free	Free	Free	Free
7410.21.60	0.7%	Free	Free	Free	Free	Free	Free	Free	Free	Free
7410.22.00	0.7%	Free	Free	Free	Free	Free	Free	Free	Free	Free
7411.10.10	0.7%	Free	Free	Free	Free	Free	Free	Free	Free	Free
7411.10.50	1.5%	Free	Free	Free	Free	Free	Free	Free	Free	Free
7411.21.10	0.7%	Free	Free	Free	Free	Free	Free	Free	Free	Free
7411.21.50	1.5%	Free	Free	Free	Free	Free	Free	Free	Free	Free
7411.22.00	1.5%	Free	Free	Free	Free	Free	Free	Free	Free	Free
7411.29.10	0.7%	Free	Free	Free	Free	Free	Free	Free	Free	Free
7411.29.50	1.5%	Free	Free	Free	Free	Free	Free	Free	Free	Free
7412.10.00	1.5%	Free	Free	Free	Free	Free	Free	Free	Free	Free
7412.20.00	1.5%	Free	Free	Free	Free	Free	Free	Free	Free	Free
7413.00.10	1.5%	Free	Free	Free	Free	Free	Free	Free	Free	Free
7413.00.50	1%	Free	Free	Free	Free	Free	Free	Free	Free	Free
7413.00.90	1.5%	Free	Free	Free	Free	Free	Free	Free	Free	Free
7414.20.60	1.5%	Free	Free	Free	Free	Free	Free	Free	Free	Free
7414.20.90	1.5%	Free	Free	Free	Free	Free	Free	Free	Free	Free
7414.90.00	1.5%	Free	Free	Free	Free	Free	Free	Free	Free	Free
7415.10.00	1.2%	Free	Free	Free	Free	Free	Free	Free	Free	Free
7415.21.00	1.5%	Free	Free	Free	Free	Free	Free	Free	Free	Free
7415.29.00	1.5%	Free	Free	Free	Free	Free	Free	Free	Free	Free
7415.31.00	1.5%	Free	Free	Free	Free	Free	Free	Free	Free	Free
7415.32.10	0.7%	Free	Free	Free	Free	Free	Free	Free	Free	Free
7415.32.50	1.5%	Free	Free	Free	Free	Free	Free	Free	Free	Free
7415.32.90	1.5%	Free	Free	Free	Free	Free	Free	Free	Free	Free
7415.39.00	1.5%	Free	Free	Free	Free	Free	Free	Free	Free	Free
7416.00.00	1.5%	Free	Free	Free	Free	Free	Free	Free	Free	Free
7417.00.00	1.5%	Free	Free	Free	Free	Free	Free	Free	Free	Free
7418.11.20	1.5%	Free	Free	Free	Free	Free	Free	Free	Free	Free

Annex II (continued)
-154-

HTS Subheading	December 17, 2001	2002	2003	2004	2005	2006	2007	2008	2009	2010
7418.11.40	1.5%	Free	Free	Free	Free	Free	Free	Free	Free	Free
7418.19.10	1.5%	Free	Free	Free	Free	Free	Free	Free	Free	Free
7418.19.20	1.5%	Free	Free	Free	Free	Free	Free	Free	Free	Free
7418.19.50	1.5%	Free	Free	Free	Free	Free	Free	Free	Free	Free
7418.20.10	1.5%	Free	Free	Free	Free	Free	Free	Free	Free	Free
7418.20.50	1.5%	Free	Free	Free	Free	Free	Free	Free	Free	Free
7419.10.00	1.5%	Free	Free	Free	Free	Free	Free	Free	Free	Free
7419.99.15	1.5%	Free	Free	Free	Free	Free	Free	Free	Free	Free
7419.99.30	1.5%	Free	Free	Free	Free	Free	Free	Free	Free	Free
7505.11.10	1.5%	Free	Free	Free	Free	Free	Free	Free	Free	Free
7505.11.30	1.3%	Free	Free	Free	Free	Free	Free	Free	Free	Free
7505.11.50	1.5%	Free	Free	Free	Free	Free	Free	Free	Free	Free
7505.12.10	1.5%	Free	Free	Free	Free	Free	Free	Free	Free	Free
7505.12.30	1.2%	Free	Free	Free	Free	Free	Free	Free	Free	Free
7505.12.50	1.5%	Free	Free	Free	Free	Free	Free	Free	Free	Free
7505.21.10	1.5%	Free	Free	Free	Free	Free	Free	Free	Free	Free
7505.21.50	1.3%	Free	Free	Free	Free	Free	Free	Free	Free	Free
7505.22.10	1.5%	Free	Free	Free	Free	Free	Free	Free	Free	Free
7505.22.50	1.3%	Free	Free	Free	Free	Free	Free	Free	Free	Free
7506.10.10	1.5%	Free	Free	Free	Free	Free	Free	Free	Free	Free
7506.10.30	1.2%	Free	Free	Free	Free	Free	Free	Free	Free	Free
7506.10.45	1.2%	Free	Free	Free	Free	Free	Free	Free	Free	Free
7506.10.60	1.2%	Free	Free	Free	Free	Free	Free	Free	Free	Free
7506.20.10	1.5%	Free	Free	Free	Free	Free	Free	Free	Free	Free
7506.20.30	1.2%	Free	Free	Free	Free	Free	Free	Free	Free	Free
7506.20.45	1.5%	Free	Free	Free	Free	Free	Free	Free	Free	Free
7506.20.60	1.5%	Free	Free	Free	Free	Free	Free	Free	Free	Free
7507.11.00	1%	Free	Free	Free	Free	Free	Free	Free	Free	Free
7507.12.00	1%	Free	Free	Free	Free	Free	Free	Free	Free	Free
7507.20.00	1.5%	Free	Free	Free	Free	Free	Free	Free	Free	Free
7508.10.00	1.5%	Free	Free	Free	Free	Free	Free	Free	Free	Free

Annex II (continued)
-155-

HTS Subheading	December 17, 2001	2002	2003	2004	2005	2006	2007	2008	2009	2010
7508.90.10	1.5%	Free	Free	Free	Free	Free	Free	Free	Free	Free
7508.90.50	1.5%	Free	Free	Free	Free	Free	Free	Free	Free	Free
7601.10.30	1.3%	Free	Free	Free	Free	Free	Free	Free	Free	Free
7601.20.30	1.3%	Free	Free	Free	Free	Free	Free	Free	Free	Free
7601.20.60	1%	Free	Free	Free	Free	Free	Free	Free	Free	Free
7603.10.00	2.5%	Free	Free	Free	Free	Free	Free	Free	Free	Free
7603.20.00	1.9%	Free	Free	Free	Free	Free	Free	Free	Free	Free
7604.10.10	2.5%	Free	Free	Free	Free	Free	Free	Free	Free	Free
7604.10.30	1.3%	Free	Free	Free	Free	Free	Free	Free	Free	Free
7604.10.50	1.5%	Free	Free	Free	Free	Free	Free	Free	Free	Free
7604.21.00	0.7%	Free	Free	Free	Free	Free	Free	Free	Free	Free
7604.29.10	2.5%	Free	Free	Free	Free	Free	Free	Free	Free	Free
7604.29.30	1.3%	Free	Free	Free	Free	Free	Free	Free	Free	Free
7604.29.50	1.5%	Free	Free	Free	Free	Free	Free	Free	Free	Free
7605.11.00	1.3%	Free	Free	Free	Free	Free	Free	Free	Free	Free
7605.19.00	2.1%	Free	Free	Free	Free	Free	Free	Free	Free	Free
7605.21.00	1.3%	Free	Free	Free	Free	Free	Free	Free	Free	Free
7605.29.00	2.1%	Free	Free	Free	Free	Free	Free	Free	Free	Free
7606.11.30	1.5%	Free	Free	Free	Free	Free	Free	Free	Free	Free
7606.11.60	1.3%	Free	Free	Free	Free	Free	Free	Free	Free	Free
7606.12.30	1.5%	Free	Free	Free	Free	Free	Free	Free	Free	Free
7606.12.60	4.8%	3.2%	1.6%	Free	Free	Free	Free	Free	Free	Free
7606.91.30	1.5%	Free	Free	Free	Free	Free	Free	Free	Free	Free
7606.91.60	1.3%	Free	Free	Free	Free	Free	Free	Free	Free	Free
7606.92.30	1.5%	Free	Free	Free	Free	Free	Free	Free	Free	Free
7606.92.60	4.8%	3.2%	1.6%	Free	Free	Free	Free	Free	Free	Free
7607.11.30	4.3%	2.9%	1.4%	Free	Free	Free	Free	Free	Free	Free
7607.11.60	3.9%	2.6%	1.3%	Free	Free	Free	Free	Free	Free	Free
7607.11.90	1.5%	Free	Free	Free	Free	Free	Free	Free	Free	Free
7607.19.10	3.9%	2.6%	1.3%	Free	Free	Free	Free	Free	Free	Free
7607.19.30	4.2%	2.8%	1.4%	Free	Free	Free	Free	Free	Free	Free

Annex II (continued)
-156-

HTS Subheading	December 17, 2001	2002	2003	2004	2005	2006	2007	2008	2009	2010
7607.19.60	1.5%	Free	Free	Free	Free	Free	Free	Free	Free	Free
7607.20.10	1.8%	Free	Free	Free	Free	Free	Free	Free	Free	Free
7608.10.00	4.2%	2.8%	1.4%	Free	Free	Free	Free	Free	Free	Free
7608.20.00	4.2%	2.8%	1.4%	Free	Free	Free	Free	Free	Free	Free
7609.00.00	4.2%	2.8%	1.4%	Free	Free	Free	Free	Free	Free	Free
7610.10.00	4.2%	2.8%	1.4%	Free	Free	Free	Free	Free	Free	Free
7610.90.00	4.2%	2.8%	1.4%	Free	Free	Free	Free	Free	Free	Free
7611.00.00	1.3%	Free	Free	Free	Free	Free	Free	Free	Free	Free
7612.10.00	1.2%	Free	Free	Free	Free	Free	Free	Free	Free	Free
7612.90.10	4.2%	2.8%	1.4%	Free	Free	Free	Free	Free	Free	Free
7613.00.00	2.5%	Free	Free	Free	Free	Free	Free	Free	Free	Free
7614.10.10	2.4%	Free	Free	Free	Free	Free	Free	Free	Free	Free
7614.10.50	2.4%	Free	Free	Free	Free	Free	Free	Free	Free	Free
7614.90.20	2.4%	Free	Free	Free	Free	Free	Free	Free	Free	Free
7614.90.40	2.4%	Free	Free	Free	Free	Free	Free	Free	Free	Free
7614.90.50	4.2%	2.8%	1.4%	Free	Free	Free	Free	Free	Free	Free
7615.11.00	1.5%	Free	Free	Free	Free	Free	Free	Free	Free	Free
7615.19.10	1.5%	Free	Free	Free	Free	Free	Free	Free	Free	Free
7615.19.30	1.5%	Free	Free	Free	Free	Free	Free	Free	Free	Free
7615.19.50	1.5%	Free	Free	Free	Free	Free	Free	Free	Free	Free
7615.19.70	1.5%	Free	Free	Free	Free	Free	Free	Free	Free	Free
7615.19.90	1.5%	Free	Free	Free	Free	Free	Free	Free	Free	Free
7615.20.00	1.9%	Free	Free	Free	Free	Free	Free	Free	Free	Free
7616.10.10	4.2%	2.8%	1.4%	Free	Free	Free	Free	Free	Free	Free
7616.10.30	2.3%	Free	Free	Free	Free	Free	Free	Free	Free	Free
7616.10.50	4.2%	2.8%	1.4%	Free	Free	Free	Free	Free	Free	Free
7616.10.70	4.1%	2.7%	1.3%	Free	Free	Free	Free	Free	Free	Free
7616.10.90	4.5%	3%	1.5%	Free	Free	Free	Free	Free	Free	Free
7616.91.00	1.2%	Free	Free	Free	Free	Free	Free	Free	Free	Free
7616.99.50	1.2%	Free	Free	Free	Free	Free	Free	Free	Free	Free

Annex II (continued)
-157-

HTS Subheading	December 17, 2001	2002	2003	2004	2005	2006	2007	2008	2009	2010
7801.10.00	1.2% on the value of the lead content	Free	Free	Free	Free	Free	Free	Free	Free	Free
7801.91.00	1.2% on the value of the lead content	Free	Free	Free	Free	Free	Free	Free	Free	Free
7801.99.30	1.2% on the value of the lead content	Free	Free	Free	Free	Free	Free	Free	Free	Free
7801.99.90	1.2% on the value of the lead content	Free	Free	Free	Free	Free	Free	Free	Free	Free
7803.00.00	0.6%	Free	Free	Free	Free	Free	Free	Free	Free	Free
7804.11.00	1.1%	Free	Free	Free	Free	Free	Free	Free	Free	Free
7804.19.00	1.5%	Free	Free	Free	Free	Free	Free	Free	Free	Free
7805.00.00	1%	Free	Free	Free	Free	Free	Free	Free	Free	Free
7806.00.00	1.5%	Free	Free	Free	Free	Free	Free	Free	Free	Free
7901.11.00	0.7%	Free	Free	Free	Free	Free	Free	Free	Free	Free
7901.12.10	1.5%	Free	Free	Free	Free	Free	Free	Free	Free	Free
7901.12.50	0.7%	Free	Free	Free	Free	Free	Free	Free	Free	Free
7901.20.00	1.5%	Free	Free	Free	Free	Free	Free	Free	Free	Free
7903.10.00	0.3¢/kg	Free	Free	Free	Free	Free	Free	Free	Free	Free
7903.90.30	0.2¢/kg	Free	Free	Free	Free	Free	Free	Free	Free	Free
7903.90.60	1.5%	Free	Free	Free	Free	Free	Free	Free	Free	Free
7904.00.00	2.1%	Free	Free	Free	Free	Free	Free	Free	Free	Free
7905.00.00	1.4%	Free	Free	Free	Free	Free	Free	Free	Free	Free
7906.00.00	1.5%	Free	Free	Free	Free	Free	Free	Free	Free	Free
7907.00.10	1.5%	Free	Free	Free	Free	Free	Free	Free	Free	Free
7907.00.60	1.5%	Free	Free	Free	Free	Free	Free	Free	Free	Free
8003.00.00	1.5%	Free	Free	Free	Free	Free	Free	Free	Free	Free
8004.00.00	1.2%	Free	Free	Free	Free	Free	Free	Free	Free	Free
8005.00.10	1.5%	Free	Free	Free	Free	Free	Free	Free	Free	Free
8005.00.20	1.4%	Free	Free	Free	Free	Free	Free	Free	Free	Free

Annex II (continued)
-158-

HTS Subheading	December 17, 2001	2002	2003	2004	2005	2006	2007	2008	2009	2010
8006.00.00	1.2%	Free	Free	Free	Free	Free	Free	Free	Free	Free
8007.00.10	1%	Free	Free	Free	Free	Free	Free	Free	Free	Free
8007.00.50	1.4%	Free	Free	Free	Free	Free	Free	Free	Free	Free
8101.10.00	5.2%	3.5%	1.7%	Free	Free	Free	Free	Free	Free	Free
8101.91.10	1.4%	Free	Free	Free	Free	Free	Free	Free	Free	Free
8101.91.50	4.9%	3.3%	1.6%	Free	Free	Free	Free	Free	Free	Free
8101.92.00	4.8%	3.2%	1.6%	Free	Free	Free	Free	Free	Free	Free
8101.93.00	2.2%	Free	Free	Free	Free	Free	Free	Free	Free	Free
8101.99.00	1.8%	Free	Free	Free	Free	Free	Free	Free	Free	Free
8102.10.00	4.5¢/kg on molybdenum content + 0.6%	Free	Free	Free	Free	Free	Free	Free	Free	Free
8102.91.10	6.9¢/kg on molybdenum content + 0.9%	Free	Free	Free	Free	Free	Free	Free	Free	Free
8102.92.30	4.9%	3.3%	1.6%	Free	Free	Free	Free	Free	Free	Free
8102.92.60	4.9%	3.3%	1.6%	Free	Free	Free	Free	Free	Free	Free
8102.93.00	2.2%	Free	Free	Free	Free	Free	Free	Free	Free	Free
8102.99.00	1.8%	Free	Free	Free	Free	Free	Free	Free	Free	Free
8103.10.60	1.2%	Free	Free	Free	Free	Free	Free	Free	Free	Free
8103.90.00	2.2%	Free	Free	Free	Free	Free	Free	Free	Free	Free
8104.11.00	6%	4%	2%	Free	Free	Free	Free	Free	Free	Free
8104.19.00	4.8%	3.2%	1.6%	Free	Free	Free	Free	Free	Free	Free
8104.30.00	2.2%	Free	Free	Free	Free	Free	Free	Free	Free	Free
8104.90.00	11.1¢/kg on magnesium content + 2.6%	7.4¢/kg on magnesium content + 1.7%	3.7¢/kg on magnesium content + 0.8%	Free	Free	Free	Free	Free	Free	Free
8105.10.30	2.2%	Free	Free	Free	Free	Free	Free	Free	Free	Free
8105.90.00	1.8%	Free	Free	Free	Free	Free	Free	Free	Free	Free
8107.90.00	2.2%	Free	Free	Free	Free	Free	Free	Free	Free	Free
8108.10.50	12%	9%	6%	3%	Free	Free	Free	Free	Free	Free
8108.90.30	4.1%	2.7%	1.3%	Free	Free	Free	Free	Free	Free	Free
8108.90.60	12%	9%	6%	3%	Free	Free	Free	Free	Free	Free

Annex II (continued)
-159-

HTS Subheading	December 17, 2001	2002	2003	2004	2005	2006	2007	2008	2009	2010
8109.10.60	2.1%	Free	Free	Free	Free	Free	Free	Free	Free	Free
8109.90.00	1.8%	Free	Free	Free	Free	Free	Free	Free	Free	Free
8111.00.45	11.2%	8.4%	5.6%	2.8%	Free	Free	Free	Free	Free	Free
8111.00.60	1.8%	Free	Free	Free	Free	Free	Free	Free	Free	Free
8112.11.60	6.3%	4.2%	2.1%	Free	Free	Free	Free	Free	Free	Free
8112.19.00	4.1%	2.7%	1.3%	Free	Free	Free	Free	Free	Free	Free
8112.20.60	1.5%	Free	Free	Free	Free	Free	Free	Free	Free	Free
8112.30.60	1.3%	Free	Free	Free	Free	Free	Free	Free	Free	Free
8112.30.90	2.2%	Free	Free	Free	Free	Free	Free	Free	Free	Free
8112.40.60	1%	Free	Free	Free	Free	Free	Free	Free	Free	Free
8112.91.10	1.5%	Free	Free	Free	Free	Free	Free	Free	Free	Free
8112.91.40	2.4%	Free	Free	Free	Free	Free	Free	Free	Free	Free
8112.91.50	1.5%	Free	Free	Free	Free	Free	Free	Free	Free	Free
8112.91.60	2%	Free	Free	Free	Free	Free	Free	Free	Free	Free
8112.99.00	2%	Free	Free	Free	Free	Free	Free	Free	Free	Free
8113.00.00	1.8%	Free	Free	Free	Free	Free	Free	Free	Free	Free
8201.40.60	4.6%	3.1%	1.5%	Free	Free	Free	Free	Free	Free	Free
8201.50.00	0.5¢ each + 1.4%	Free	Free	Free	Free	Free	Free	Free	Free	Free
8201.60.00	0.5¢ each + 1.4%	Free	Free	Free	Free	Free	Free	Free	Free	Free
8201.90.30	1.5¢ each + 3.8%	1¢ each + 2.5%	0.5¢ each + 1.2%	Free	Free	Free	Free	Free	Free	Free
8202.40.30	5.4%	3.6%	1.8%	Free	Free	Free	Free	Free	Free	Free
8203.20.20	2%	Free	Free	Free	Free	Free	Free	Free	Free	Free
8203.20.40	9.6%	7.2%	4.8%	2.4%	Free	Free	Free	Free	Free	Free
8203.20.60	9¢/doz. + 4.1%	6¢/doz. + 2.7%	3¢/doz. + 1.3%	Free	Free	Free	Free	Free	Free	Free
8203.20.80	2.2%	Free	Free	Free	Free	Free	Free	Free	Free	Free
8203.40.30	4.5%	3%	1.5%	Free	Free	Free	Free	Free	Free	Free
8203.40.60	1.6%	Free	Free	Free	Free	Free	Free	Free	Free	Free
8204.11.00	6.7%	4.5%	2.2%	Free	Free	Free	Free	Free	Free	Free
8204.12.00	6.7%	4.5%	2.2%	Free	Free	Free	Free	Free	Free	Free

Annex II (continued)
-160-

HTS Subheading	December 17, 2001	2002	2003	2004	2005	2006	2007	2008	2009	2010
8204.20.00	6.7%	4.5%	2.2%	Free	Free	Free	Free	Free	Free	Free
8205.10.00	4.6%	3.1%	1.5%	Free	Free	Free	Free	Free	Free	Free
8205.20.30	4.6%	3.1%	1.5%	Free	Free	Free	Free	Free	Free	Free
8205.30.30	4.2%	2.8%	1.4%	Free	Free	Free	Free	Free	Free	Free
8205.30.60	2.5%	Free	Free	Free	Free	Free	Free	Free	Free	Free
8205.40.00	4.6%	3.1%	1.5%	Free	Free	Free	Free	Free	Free	Free
8205.51.30	1.8%	Free	Free	Free	Free	Free	Free	Free	Free	Free
8205.51.60	1.6¢/kg + 3.7%	1.1¢/kg + 2.5%	0.5¢/kg + 1.2%	Free	Free	Free	Free	Free	Free	Free
8205.51.75	1.8%	Free	Free	Free	Free	Free	Free	Free	Free	Free
8205.59.10	5.4%	3.6%	1.8%	Free	Free	Free	Free	Free	Free	Free
8205.59.45	3.9%	2.6%	1.3%	Free	Free	Free	Free	Free	Free	Free
8205.59.55	3.9%	2.6%	1.3%	Free	Free	Free	Free	Free	Free	Free
8205.59.70	0.7¢/kg + 1.7%	Free	Free	Free	Free	Free	Free	Free	Free	Free
8205.59.80	1.8%	Free	Free	Free	Free	Free	Free	Free	Free	Free
8205.60.00	1.4%	Free	Free	Free	Free	Free	Free	Free	Free	Free
8205.70.00	2.5%	Free	Free	Free	Free	Free	Free	Free	Free	Free
8205.90.00	The rate of duty applicable to that article in the set subject to the highest rate of duty	The rate of duty applicable to that article in the set subject to the highest rate of duty	The rate of duty applicable to that article in the set subject to the highest rate of duty	Free	Free	Free	Free	Free	Free	Free
8206.00.00	The rate of duty applicable to that article in the set subject to the highest rate of duty	The rate of duty applicable to that article in the set subject to the highest rate of duty	The rate of duty applicable to that article in the set subject to the highest rate of duty	Free	Free	Free	Free	Free	Free	Free
8207.13.00	1.8%	Free	Free	Free	Free	Free	Free	Free	Free	Free
8207.19.30	2.5%	Free	Free	Free	Free	Free	Free	Free	Free	Free
8207.19.60	1.4%	Free	Free	Free	Free	Free	Free	Free	Free	Free
8207.20.00	1.9%	Free	Free	Free	Free	Free	Free	Free	Free	Free
8207.30.30	4.2%	2.8%	1.4%	Free	Free	Free	Free	Free	Free	Free
8207.30.60	1.4%	Free	Free	Free	Free	Free	Free	Free	Free	Free

Annex II (continued)
-161-

HTS Subheading	December 17, 2001	2002	2003	2004	2005	2006	2007	2008	2009	2010
8207.40.30	4.2%	2.8%	1.4%	Free	Free	Free	Free	Free	Free	Free
8207.40.60	2.4%	Free	Free	Free	Free	Free	Free	Free	Free	Free
8207.50.20	2.5%	Free	Free	Free	Free	Free	Free	Free	Free	Free
8207.50.40	6.3%	4.2%	2.1%	Free	Free	Free	Free	Free	Free	Free
8207.50.60	3.9%	2.6%	1.3%	Free	Free	Free	Free	Free	Free	Free
8207.50.80	1.4%	Free	Free	Free	Free	Free	Free	Free	Free	Free
8207.60.00	2.4%	Free	Free	Free	Free	Free	Free	Free	Free	Free
8207.70.30	2.5%	Free	Free	Free	Free	Free	Free	Free	Free	Free
8207.70.60	1.4%	Free	Free	Free	Free	Free	Free	Free	Free	Free
8207.80.30	2.4%	Free	Free	Free	Free	Free	Free	Free	Free	Free
8207.80.60	1.8%	Free	Free	Free	Free	Free	Free	Free	Free	Free
8207.90.15	0.8%	Free	Free	Free	Free	Free	Free	Free	Free	Free
8207.90.30	2.5%	Free	Free	Free	Free	Free	Free	Free	Free	Free
8207.90.45	2.4%	Free	Free	Free	Free	Free	Free	Free	Free	Free
8207.90.60	2.1%	Free	Free	Free	Free	Free	Free	Free	Free	Free
8207.90.75	1.8%	Free	Free	Free	Free	Free	Free	Free	Free	Free
8209.00.00	2.3%	Free	Free	Free	Free	Free	Free	Free	Free	Free
8210.00.00	1.8%	Free	Free	Free	Free	Free	Free	Free	Free	Free
8211.10.00	The rate of duty applicable to that article in the set subject to the highest rate of duty	The rate of duty applicable to that article in the set subject to the highest rate of duty	The rate of duty applicable to that article in the set subject to the highest rate of duty	Free	Free	Free	Free	Free	Free	Free
8211.91.20	0.3¢ each + 4.8%	0.2¢ each + 3.2%	0.1¢ each + 1.6%	Free	Free	Free	Free	Free	Free	Free
8211.91.25	0.3¢ each + 5.1%	0.2¢ each + 3.4%	0.1¢ each + 1.7%	Free	Free	Free	Free	Free	Free	Free
8211.91.30	0.7¢ each + 8.4%	0.5¢ each + 6.3%	0.3¢ each + 4.2%	0.1¢ each + 2.1%	Free	Free	Free	Free	Free	Free
8211.91.40	0.1¢ each + 1.8%	Free	Free	Free	Free	Free	Free	Free	Free	Free
8211.91.50	0.5¢ each + 2.7%	0.3¢ each + 1.8%	0.1¢ each + 0.9%	Free	Free	Free	Free	Free	Free	Free

Annex II (continued)
-162-

HTS Subheading	December 17, 2001	2002	2003	2004	2005	2006	2007	2008	2009	2010
8211.91.80	0.2¢ each + 3.6%	0.1¢ each + 2.4%	1.2%	Free	Free	Free	Free	Free	Free	Free
8211.92.20	0.6¢ each + 3.4%	0.4¢ each + 2.3%	0.2¢ each + 1.1%	Free	Free	Free	Free	Free	Free	Free
8211.92.40	0.7¢ each + 3.4%	0.5¢ each + 2.3%	0.2¢ each + 1.1%	Free	Free	Free	Free	Free	Free	Free
8211.92.60	2.2%	Free	Free	Free	Free	Free	Free	Free	Free	Free
8211.92.90	0.3¢ each + 4.5%	0.2¢ each + 3%	0.1¢ each + 1.5%	Free	Free	Free	Free	Free	Free	Free
8211.93.00	2.2¢ each + 4%	1.5¢ each + 2.7%	0.7¢ each + 1.3%	Free	Free	Free	Free	Free	Free	Free
8211.94.10	1.1%	Free	Free	Free	Free	Free	Free	Free	Free	Free
8211.94.50	0.8¢ each + 4.3%	0.6¢ each + 3.2%	0.4¢ each + 2.1%	0.2¢ each + 1%	Free	Free	Free	Free	Free	Free
8211.95.10	0.1¢ each + 2.4%	Free	Free	Free	Free	Free	Free	Free	Free	Free
8211.95.50	0.3¢ each + 4.5%	0.2¢ each + 3%	0.1¢ each + 1.5%	Free	Free	Free	Free	Free	Free	Free
8211.95.90	2.2¢ each + 4%	1.5¢ each + 2.7%	0.7¢ each + 1.3%	Free	Free	Free	Free	Free	Free	Free
8213.00.30	1.3¢ each + 3.4%	1¢ each + 2.5%	0.6¢ each + 1.7%	0.3¢ each + 0.8%	Free	Free	Free	Free	Free	Free
8213.00.60	6¢ each + 6%	4¢ each + 4%	2¢ each + 2%	Free	Free	Free	Free	Free	Free	Free
8213.00.90	4.6¢ each + 4.6%	3.4¢ each + 3.4%	2.3¢ each + 2.3%	1.1¢ each + 1.1%	Free	Free	Free	Free	Free	Free
8214.10.00	0.2¢ each + 3.1%	0.1¢ each + 2.1%	1%	Free	Free	Free	Free	Free	Free	Free
8214.20.30	2%	Free	Free	Free	Free	Free	Free	Free	Free	Free
8214.20.90	2%	Free	Free	Free	Free	Free	Free	Free	Free	Free
8214.90.30	0.7¢ each + 3.6%	0.5¢ each + 2.4%	0.2¢ each + 1.2%	Free	Free	Free	Free	Free	Free	Free
8214.90.60	0.1¢ each + 1.5%	Free	Free	Free	Free	Free	Free	Free	Free	Free
8214.90.90	0.7¢ each + 1.6%	Free	Free	Free	Free	Free	Free	Free	Free	Free

Annex II (continued)
-163-

HTS Subheading	December 17, 2001	2002	2003	2004	2005	2006	2007	2008	2009	2010
8215.10.00	The rate of duty applicable to that article in the set subject to the highest rate of duty	The rate of duty applicable to that article in the set subject to the highest rate of duty	The rate of duty applicable to that article in the set subject to the highest rate of duty	Free	Free	Free	Free	Free	Free	Free
8215.20.00	The rate of duty applicable to that article in the set subject to the highest rate of duty	The rate of duty applicable to that article in the set subject to the highest rate of duty	The rate of duty applicable to that article in the set subject to the highest rate of duty	Free	Free	Free	Free	Free	Free	Free
8215.91.60	2.1%	Free	Free	Free	Free	Free	Free	Free	Free	Free
8215.91.90	1.3%	Free	Free	Free	Free	Free	Free	Free	Free	Free
8215.99.01	0.8¢ each + 14.2%	0.7¢ each + 12.6%	0.6¢ each + 11%	0.5¢ each + 9.4%	0.4¢ each + 7.9%	0.3¢ each + 6.3%	0.2¢ each + 4.7%	0.1¢ each + 3.1%	1.5%	Free
8215.99.05	0.3¢ each + 6.3%	0.2¢ each + 4.2%	0.1¢ each + 2.1%	Free	Free	Free	Free	Free	Free	Free
8215.99.10	0.4¢ each + 5%	0.3¢ each + 3.7%	0.2¢ each + 2.5%	0.1¢ each + 1.2%	Free	Free	Free	Free	Free	Free
8215.99.15	0.3¢ each + 3.6%	0.2¢ each + 2.4%	0.1¢ each + 1.2%	Free	Free	Free	Free	Free	Free	Free
8215.99.20	0.3¢ each + 2.4%	0.2¢ each + 1.6%	0.1¢ each + 0.8%	Free	Free	Free	Free	Free	Free	Free
8215.99.24	0.1¢ each + 2.2%	Free	Free	Free	Free	Free	Free	Free	Free	Free
8215.99.26	0.1¢ each + 1.5%	Free	Free	Free	Free	Free	Free	Free	Free	Free
8215.99.30	11.2%	8.4%	5.6%	2.8%	Free	Free	Free	Free	Free	Free
8215.99.35	5.1%	3.4%	1.7%	Free	Free	Free	Free	Free	Free	Free
8215.99.40	2.5%	Free	Free	Free	Free	Free	Free	Free	Free	Free
8215.99.50	3.9%	2.6%	1.3%	Free	Free	Free	Free	Free	Free	Free
8301.10.20	1.1%	Free	Free	Free	Free	Free	Free	Free	Free	Free
8301.10.40	1.9%	Free	Free	Free	Free	Free	Free	Free	Free	Free
8301.10.50	1.8%	Free	Free	Free	Free	Free	Free	Free	Free	Free

Annex II (continued)
-164-

HTS Subheading	December 17, 2001	2002	2003	2004	2005	2006	2007	2008	2009	2010
8301.10.60	4.5%	3%	1.5%	Free	Free	Free	Free	Free	Free	Free
8301.10.80	2.4%	Free	Free	Free	Free	Free	Free	Free	Free	Free
8301.10.90	2.1%	Free	Free	Free	Free	Free	Free	Free	Free	Free
8301.20.00	4.2%	2.8%	1.4%	Free	Free	Free	Free	Free	Free	Free
8301.30.00	4.2%	2.8%	1.4%	Free	Free	Free	Free	Free	Free	Free
8301.40.30	1.5%	Free	Free	Free	Free	Free	Free	Free	Free	Free
8301.40.60	4.2%	2.8%	1.4%	Free	Free	Free	Free	Free	Free	Free
8301.50.00	1.5%	Free	Free	Free	Free	Free	Free	Free	Free	Free
8301.60.00	1.4%	Free	Free	Free	Free	Free	Free	Free	Free	Free
8301.70.00	2.2%	Free	Free	Free	Free	Free	Free	Free	Free	Free
8302.10.30	1%	Free	Free	Free	Free	Free	Free	Free	Free	Free
8302.10.60	1.7%	Free	Free	Free	Free	Free	Free	Free	Free	Free
8302.10.90	1.7%	Free	Free	Free	Free	Free	Free	Free	Free	Free
8302.20.00	4.2%	2.8%	1.4%	Free	Free	Free	Free	Free	Free	Free
8302.30.30	1%	Free	Free	Free	Free	Free	Free	Free	Free	Free
8302.30.60	1.7%	Free	Free	Free	Free	Free	Free	Free	Free	Free
8302.41.30	1.9%	Free	Free	Free	Free	Free	Free	Free	Free	Free
8302.41.60	1.9%	Free	Free	Free	Free	Free	Free	Free	Free	Free
8302.41.90	1.7%	Free	Free	Free	Free	Free	Free	Free	Free	Free
8302.42.30	1.9%	Free	Free	Free	Free	Free	Free	Free	Free	Free
8302.42.60	1.7%	Free	Free	Free	Free	Free	Free	Free	Free	Free
8302.49.20	5.6%	3.7%	1.8%	Free	Free	Free	Free	Free	Free	Free
8302.49.60	4.2%	2.8%	1.4%	Free	Free	Free	Free	Free	Free	Free
8302.49.80	1.7%	Free	Free	Free	Free	Free	Free	Free	Free	Free
8302.60.30	1.9%	Free	Free	Free	Free	Free	Free	Free	Free	Free
8302.60.90	1.5%	Free	Free	Free	Free	Free	Free	Free	Free	Free
8303.00.00	1.9%	Free	Free	Free	Free	Free	Free	Free	Free	Free
8304.00.00	1.9%	Free	Free	Free	Free	Free	Free	Free	Free	Free
8305.10.00	1.4%	Free	Free	Free	Free	Free	Free	Free	Free	Free
8305.90.60	4.2%	2.8%	1.4%	Free	Free	Free	Free	Free	Free	Free
8306.10.00	4.3%	2.9%	1.4%	Free	Free	Free	Free	Free	Free	Free

Annex II (continued)
-165-

HTS Subheading	December 17, 2001	2002	2003	2004	2005	2006	2007	2008	2009	2010
8306.21.00	2.2%	Free	Free	Free	Free	Free	Free	Free	Free	Free
8306.30.00	1.3%	Free	Free	Free	Free	Free	Free	Free	Free	Free
8307.10.30	1.9%	Free	Free	Free	Free	Free	Free	Free	Free	Free
8307.10.60	1.9%	Free	Free	Free	Free	Free	Free	Free	Free	Free
8307.90.30	1.9%	Free	Free	Free	Free	Free	Free	Free	Free	Free
8307.90.60	1.9%	Free	Free	Free	Free	Free	Free	Free	Free	Free
8308.10.00	0.5¢ each + 1.4%	Free	Free	Free	Free	Free	Free	Free	Free	Free
8308.90.60	1.9%	Free	Free	Free	Free	Free	Free	Free	Free	Free
8308.90.90	1.3%	Free	Free	Free	Free	Free	Free	Free	Free	Free
8309.90.00	1.3%	Free	Free	Free	Free	Free	Free	Free	Free	Free
8401.10.00	1.6%	Free	Free	Free	Free	Free	Free	Free	Free	Free
8401.20.00	1.3%	Free	Free	Free	Free	Free	Free	Free	Free	Free
8401.30.00	1.6%	Free	Free	Free	Free	Free	Free	Free	Free	Free
8401.40.00	1.6%	Free	Free	Free	Free	Free	Free	Free	Free	Free
8402.11.00	3.9%	2.6%	1.3%	Free	Free	Free	Free	Free	Free	Free
8402.12.00	2.1%	Free	Free	Free	Free	Free	Free	Free	Free	Free
8402.19.00	3.9%	2.6%	1.3%	Free	Free	Free	Free	Free	Free	Free
8402.20.00	1.6%	Free	Free	Free	Free	Free	Free	Free	Free	Free
8402.90.00	2.1%	Free	Free	Free	Free	Free	Free	Free	Free	Free
8404.10.00	1.7%	Free	Free	Free	Free	Free	Free	Free	Free	Free
8404.20.00	4.2%	2.8%	1.4%	Free	Free	Free	Free	Free	Free	Free
8404.90.00	1.7%	Free	Free	Free	Free	Free	Free	Free	Free	Free
8406.10.10	5%	3.3%	1.6%	Free	Free	Free	Free	Free	Free	Free
8406.81.10	5%	3.3%	1.6%	Free	Free	Free	Free	Free	Free	Free
8406.82.10	5%	3.3%	1.6%	Free	Free	Free	Free	Free	Free	Free
8406.90.20	5%	3.3%	1.6%	Free	Free	Free	Free	Free	Free	Free
8406.90.30	5%	3.3%	1.6%	Free	Free	Free	Free	Free	Free	Free
8406.90.40	5%	3.3%	1.6%	Free	Free	Free	Free	Free	Free	Free
8406.90.45	5%	3.3%	1.6%	Free	Free	Free	Free	Free	Free	Free
8407.33.60	1.2%	Free	Free	Free	Free	Free	Free	Free	Free	Free
8407.34.14	1.2%	Free	Free	Free	Free	Free	Free	Free	Free	Free

Annex II (continued)
-166-

HTS Subheading	December 17, 2001	2002	2003	2004	2005	2006	2007	2008	2009	2010
8407.34.18	1.2%	Free	Free	Free	Free	Free	Free	Free	Free	Free
8407.34.44	1.2%	Free	Free	Free	Free	Free	Free	Free	Free	Free
8407.34.48	1.2%	Free	Free	Free	Free	Free	Free	Free	Free	Free
8408.10.00	1.2%	Free	Free	Free	Free	Free	Free	Free	Free	Free
8408.20.20	1.2%	Free	Free	Free	Free	Free	Free	Free	Free	Free
8408.20.90	1.2%	Free	Free	Free	Free	Free	Free	Free	Free	Free
8409.91.30	1.2%	Free	Free	Free	Free	Free	Free	Free	Free	Free
8409.91.50	1.2%	Free	Free	Free	Free	Free	Free	Free	Free	Free
8409.91.92	1.2%	Free	Free	Free	Free	Free	Free	Free	Free	Free
8409.91.99	1.2%	Free	Free	Free	Free	Free	Free	Free	Free	Free
8409.99.91	1.2%	Free	Free	Free	Free	Free	Free	Free	Free	Free
8409.99.92	1.2%	Free	Free	Free	Free	Free	Free	Free	Free	Free
8410.11.00	1.9%	Free	Free	Free	Free	Free	Free	Free	Free	Free
8410.12.00	1.9%	Free	Free	Free	Free	Free	Free	Free	Free	Free
8410.13.00	1.9%	Free	Free	Free	Free	Free	Free	Free	Free	Free
8410.90.00	1.9%	Free	Free	Free	Free	Free	Free	Free	Free	Free
8411.81.80	1.2%	Free	Free	Free	Free	Free	Free	Free	Free	Free
8411.82.80	1.2%	Free	Free	Free	Free	Free	Free	Free	Free	Free
8411.99.90	1.2%	Free	Free	Free	Free	Free	Free	Free	Free	Free
8413.30.10	1.2%	Free	Free	Free	Free	Free	Free	Free	Free	Free
8413.30.90	1.2%	Free	Free	Free	Free	Free	Free	Free	Free	Free
8413.91.10	1.2%	Free	Free	Free	Free	Free	Free	Free	Free	Free
8414.10.00	1.2%	Free	Free	Free	Free	Free	Free	Free	Free	Free
8414.20.00	1.8%	Free	Free	Free	Free	Free	Free	Free	Free	Free
8414.40.00	1.3%	Free	Free	Free	Free	Free	Free	Free	Free	Free
8414.51.00	2.3%	Free	Free	Free	Free	Free	Free	Free	Free	Free
8414.59.30	1.1%	Free	Free	Free	Free	Free	Free	Free	Free	Free
8414.59.60	1.1%	Free	Free	Free	Free	Free	Free	Free	Free	Free
8414.80.90	1.8%	Free	Free	Free	Free	Free	Free	Free	Free	Free
8414.90.10	2.3%	Free	Free	Free	Free	Free	Free	Free	Free	Free
8415.20.00	0.7%	Free	Free	Free	Free	Free	Free	Free	Free	Free

Annex II (continued)
-167-

HTS Subheading	December 17, 2001	2002	2003	2004	2005	2006	2007	2008	2009	2010
8415.81.00	0.5%	Free	Free	Free	Free	Free	Free	Free	Free	Free
8415.82.00	1.1%	Free	Free	Free	Free	Free	Free	Free	Free	Free
8415.83.00	0.7%	Free	Free	Free	Free	Free	Free	Free	Free	Free
8415.90.40	0.7%	Free	Free	Free	Free	Free	Free	Free	Free	Free
8415.90.80	0.7%	Free	Free	Free	Free	Free	Free	Free	Free	Free
8417.10.00	1.4%	Free	Free	Free	Free	Free	Free	Free	Free	Free
8417.20.00	1.7%	Free	Free	Free	Free	Free	Free	Free	Free	Free
8417.80.00	1.9%	Free	Free	Free	Free	Free	Free	Free	Free	Free
8417.90.00	1.9%	Free	Free	Free	Free	Free	Free	Free	Free	Free
8418.22.00	0.5%	Free	Free	Free	Free	Free	Free	Free	Free	Free
8418.29.00	0.9%	Free	Free	Free	Free	Free	Free	Free	Free	Free
8419.50.10	2.1%	Free	Free	Free	Free	Free	Free	Free	Free	Free
8419.60.10	2.1%	Free	Free	Free	Free	Free	Free	Free	Free	Free
8419.81.10	2%	Free	Free	Free	Free	Free	Free	Free	Free	Free
8419.89.90	2.1%	Free	Free	Free	Free	Free	Free	Free	Free	Free
8419.90.80	2%	Free	Free	Free	Free	Free	Free	Free	Free	Free
8420.10.10	1.7%	Free	Free	Free	Free	Free	Free	Free	Free	Free
8420.91.10	1.3%	Free	Free	Free	Free	Free	Free	Free	Free	Free
8420.99.10	1.7%	Free	Free	Free	Free	Free	Free	Free	Free	Free
8421.19.90	0.6%	Free	Free	Free	Free	Free	Free	Free	Free	Free
8421.23.00	1.2%	Free	Free	Free	Free	Free	Free	Free	Free	Free
8421.31.00	1.2%	Free	Free	Free	Free	Free	Free	Free	Free	Free
8422.11.00	1.2%	Free	Free	Free	Free	Free	Free	Free	Free	Free
8423.20.00	1.4%	Free	Free	Free	Free	Free	Free	Free	Free	Free
8423.89.00	1.4%	Free	Free	Free	Free	Free	Free	Free	Free	Free
8423.90.00	1.4%	Free	Free	Free	Free	Free	Free	Free	Free	Free
8424.20.10	1.4%	Free	Free	Free	Free	Free	Free	Free	Free	Free
8424.81.90	1.2%	Free	Free	Free	Free	Free	Free	Free	Free	Free
8424.89.70	0.9%	Free	Free	Free	Free	Free	Free	Free	Free	Free
8424.90.10	1.4%	Free	Free	Free	Free	Free	Free	Free	Free	Free
8438.40.00	1.1%	Free	Free	Free	Free	Free	Free	Free	Free	Free

Annex II (continued)
-168-

HTS Subheading	December 17, 2001	2002	2003	2004	2005	2006	2007	2008	2009	2010
8438.50.00	1.4%	Free	Free	Free	Free	Free	Free	Free	Free	Free
8438.90.90	1.4%	Free	Free	Free	Free	Free	Free	Free	Free	Free
8442.50.90	2%	Free	Free	Free	Free	Free	Free	Free	Free	Free
8443.11.10	1.6%	Free	Free	Free	Free	Free	Free	Free	Free	Free
8443.21.00	1.1%	Free	Free	Free	Free	Free	Free	Free	Free	Free
8443.30.00	1.1%	Free	Free	Free	Free	Free	Free	Free	Free	Free
8443.40.00	1.1%	Free	Free	Free	Free	Free	Free	Free	Free	Free
8443.51.10	1.3%	Free	Free	Free	Free	Free	Free	Free	Free	Free
8443.59.10	1.3%	Free	Free	Free	Free	Free	Free	Free	Free	Free
8443.90.10	1.3%	Free	Free	Free	Free	Free	Free	Free	Free	Free
8445.19.00	1.6%	Free	Free	Free	Free	Free	Free	Free	Free	Free
8445.40.00	1.8%	Free	Free	Free	Free	Free	Free	Free	Free	Free
8445.90.00	1.8%	Free	Free	Free	Free	Free	Free	Free	Free	Free
8446.21.50	1.8%	Free	Free	Free	Free	Free	Free	Free	Free	Free
8446.30.50	1.8%	Free	Free	Free	Free	Free	Free	Free	Free	Free
8447.20.30	1.3%	Free	Free	Free	Free	Free	Free	Free	Free	Free
8448.20.10	1.8%	Free	Free	Free	Free	Free	Free	Free	Free	Free
8448.20.50	1.6%	Free	Free	Free	Free	Free	Free	Free	Free	Free
8448.31.00	1.6%	Free	Free	Free	Free	Free	Free	Free	Free	Free
8448.33.00	1.6%	Free	Free	Free	Free	Free	Free	Free	Free	Free
8448.39.50	1.8%	Free	Free	Free	Free	Free	Free	Free	Free	Free
8448.41.00	1.8%	Free	Free	Free	Free	Free	Free	Free	Free	Free
8448.42.00	1.8%	Free	Free	Free	Free	Free	Free	Free	Free	Free
8449.00.10	1.3%	Free	Free	Free	Free	Free	Free	Free	Free	Free
8450.11.00	0.7%	Free	Free	Free	Free	Free	Free	Free	Free	Free
8450.12.00	1.3%	Free	Free	Free	Free	Free	Free	Free	Free	Free
8450.19.00	0.9%	Free	Free	Free	Free	Free	Free	Free	Free	Free
8450.20.00	0.5%	Free	Free	Free	Free	Free	Free	Free	Free	Free
8450.90.20	1.3%	Free	Free	Free	Free	Free	Free	Free	Free	Free
8450.90.40	1.3%	Free	Free	Free	Free	Free	Free	Free	Free	Free
8450.90.60	1.3%	Free	Free	Free	Free	Free	Free	Free	Free	Free

Annex II (continued)
-169-

HTS Subheading	December 17, 2001	2002	2003	2004	2005	2006	2007	2008	2009	2010
8451.21.00	1.7%	Free	Free	Free	Free	Free	Free	Free	Free	Free
8451.29.00	1.3%	Free	Free	Free	Free	Free	Free	Free	Free	Free
8451.40.00	1.7%	Free	Free	Free	Free	Free	Free	Free	Free	Free
8451.80.00	1.7%	Free	Free	Free	Free	Free	Free	Free	Free	Free
8451.90.30	1.7%	Free	Free	Free	Free	Free	Free	Free	Free	Free
8451.90.60	1.7%	Free	Free	Free	Free	Free	Free	Free	Free	Free
8451.90.90	1.7%	Free	Free	Free	Free	Free	Free	Free	Free	Free
8452.40.00	1.2%	Free	Free	Free	Free	Free	Free	Free	Free	Free
8456.10.10	1.7%	Free	Free	Free	Free	Free	Free	Free	Free	Free
8456.10.80	1.2%	Free	Free	Free	Free	Free	Free	Free	Free	Free
8456.20.10	1.7%	Free	Free	Free	Free	Free	Free	Free	Free	Free
8456.20.50	1.2%	Free	Free	Free	Free	Free	Free	Free	Free	Free
8456.30.10	1.7%	Free	Free	Free	Free	Free	Free	Free	Free	Free
8456.30.50	1.2%	Free	Free	Free	Free	Free	Free	Free	Free	Free
8456.99.30	1.7%	Free	Free	Free	Free	Free	Free	Free	Free	Free
8456.99.90	1.1%	Free	Free	Free	Free	Free	Free	Free	Free	Free
8457.10.00	2.1%	Free	Free	Free	Free	Free	Free	Free	Free	Free
8457.20.00	1.6%	Free	Free	Free	Free	Free	Free	Free	Free	Free
8457.30.00	1.6%	Free	Free	Free	Free	Free	Free	Free	Free	Free
8458.11.00	2.2%	Free	Free	Free	Free	Free	Free	Free	Free	Free
8458.19.00	2.2%	Free	Free	Free	Free	Free	Free	Free	Free	Free
8458.91.10	2.1%	Free	Free	Free	Free	Free	Free	Free	Free	Free
8458.91.50	2.2%	Free	Free	Free	Free	Free	Free	Free	Free	Free
8458.99.10	2.1%	Free	Free	Free	Free	Free	Free	Free	Free	Free
8458.99.50	2.2%	Free	Free	Free	Free	Free	Free	Free	Free	Free
8459.10.00	1.6%	Free	Free	Free	Free	Free	Free	Free	Free	Free
8459.21.00	2.1%	Free	Free	Free	Free	Free	Free	Free	Free	Free
8459.29.00	2.1%	Free	Free	Free	Free	Free	Free	Free	Free	Free
8459.31.00	2.1%	Free	Free	Free	Free	Free	Free	Free	Free	Free
8459.39.00	2.1%	Free	Free	Free	Free	Free	Free	Free	Free	Free
8459.40.00	2.1%	Free	Free	Free	Free	Free	Free	Free	Free	Free

Annex II (continued)
-170-

HTS Subheading	December 17, 2001	2002	2003	2004	2005	2006	2007	2008	2009	2010
8459.51.00	2.1%	Free	Free	Free	Free	Free	Free	Free	Free	Free
8459.59.00	2.1%	Free	Free	Free	Free	Free	Free	Free	Free	Free
8459.61.00	2.1%	Free	Free	Free	Free	Free	Free	Free	Free	Free
8459.69.00	2.1%	Free	Free	Free	Free	Free	Free	Free	Free	Free
8459.70.40	2.1%	Free	Free	Free	Free	Free	Free	Free	Free	Free
8459.70.80	2.1%	Free	Free	Free	Free	Free	Free	Free	Free	Free
8460.11.00	2.2%	Free	Free	Free	Free	Free	Free	Free	Free	Free
8460.19.00	2.2%	Free	Free	Free	Free	Free	Free	Free	Free	Free
8460.21.00	2.2%	Free	Free	Free	Free	Free	Free	Free	Free	Free
8460.29.00	2.2%	Free	Free	Free	Free	Free	Free	Free	Free	Free
8460.31.00	2.2%	Free	Free	Free	Free	Free	Free	Free	Free	Free
8460.39.00	2.2%	Free	Free	Free	Free	Free	Free	Free	Free	Free
8460.40.40	2.2%	Free	Free	Free	Free	Free	Free	Free	Free	Free
8460.40.80	2.2%	Free	Free	Free	Free	Free	Free	Free	Free	Free
8460.90.40	2.2%	Free	Free	Free	Free	Free	Free	Free	Free	Free
8460.90.80	2.2%	Free	Free	Free	Free	Free	Free	Free	Free	Free
8461.10.40	2.2%	Free	Free	Free	Free	Free	Free	Free	Free	Free
8461.10.80	2.2%	Free	Free	Free	Free	Free	Free	Free	Free	Free
8461.20.40	2.2%	Free	Free	Free	Free	Free	Free	Free	Free	Free
8461.20.80	2.2%	Free	Free	Free	Free	Free	Free	Free	Free	Free
8461.30.40	2.2%	Free	Free	Free	Free	Free	Free	Free	Free	Free
8461.30.80	2.2%	Free	Free	Free	Free	Free	Free	Free	Free	Free
8461.40.10	4.3%	2.9%	1.4%	Free	Free	Free	Free	Free	Free	Free
8461.40.50	2.2%	Free	Free	Free	Free	Free	Free	Free	Free	Free
8461.50.40	2.2%	Free	Free	Free	Free	Free	Free	Free	Free	Free
8461.50.80	2.2%	Free	Free	Free	Free	Free	Free	Free	Free	Free
8461.90.40	2.2%	Free	Free	Free	Free	Free	Free	Free	Free	Free
8461.90.80	2.2%	Free	Free	Free	Free	Free	Free	Free	Free	Free
8462.10.00	2.2%	Free	Free	Free	Free	Free	Free	Free	Free	Free
8462.21.80	2.2%	Free	Free	Free	Free	Free	Free	Free	Free	Free
8462.29.80	2.2%	Free	Free	Free	Free	Free	Free	Free	Free	Free

Annex II (continued)
-171-

HTS Subheading	December 17, 2001	2002	2003	2004	2005	2006	2007	2008	2009	2010
8462.31.00	2.2%	Free	Free	Free	Free	Free	Free	Free	Free	Free
8462.39.00	2.2%	Free	Free	Free	Free	Free	Free	Free	Free	Free
8462.41.00	2.2%	Free	Free	Free	Free	Free	Free	Free	Free	Free
8462.49.00	2.2%	Free	Free	Free	Free	Free	Free	Free	Free	Free
8462.91.40	2.2%	Free	Free	Free	Free	Free	Free	Free	Free	Free
8462.91.80	2.2%	Free	Free	Free	Free	Free	Free	Free	Free	Free
8462.99.40	2.2%	Free	Free	Free	Free	Free	Free	Free	Free	Free
8462.99.80	2.2%	Free	Free	Free	Free	Free	Free	Free	Free	Free
8463.10.00	2.2%	Free	Free	Free	Free	Free	Free	Free	Free	Free
8463.20.00	2.2%	Free	Free	Free	Free	Free	Free	Free	Free	Free
8463.30.00	2.2%	Free	Free	Free	Free	Free	Free	Free	Free	Free
8463.90.00	2.2%	Free	Free	Free	Free	Free	Free	Free	Free	Free
8464.20.50	1%	Free	Free	Free	Free	Free	Free	Free	Free	Free
8464.90.90	1%	Free	Free	Free	Free	Free	Free	Free	Free	Free
8465.10.00	1.2%	Free	Free	Free	Free	Free	Free	Free	Free	Free
8465.91.00	1.5%	Free	Free	Free	Free	Free	Free	Free	Free	Free
8465.92.00	1.5%	Free	Free	Free	Free	Free	Free	Free	Free	Free
8465.93.00	1.5%	Free	Free	Free	Free	Free	Free	Free	Free	Free
8465.94.00	1.4%	Free	Free	Free	Free	Free	Free	Free	Free	Free
8465.95.00	1.5%	Free	Free	Free	Free	Free	Free	Free	Free	Free
8465.96.00	1.2%	Free	Free	Free	Free	Free	Free	Free	Free	Free
8465.99.80	1.2%	Free	Free	Free	Free	Free	Free	Free	Free	Free
8466.10.80	1.9%	Free	Free	Free	Free	Free	Free	Free	Free	Free
8466.20.10	2.3%	Free	Free	Free	Free	Free	Free	Free	Free	Free
8466.20.80	1.8%	Free	Free	Free	Free	Free	Free	Free	Free	Free
8466.30.10	1.8%	Free	Free	Free	Free	Free	Free	Free	Free	Free
8466.30.60	1.4%	Free	Free	Free	Free	Free	Free	Free	Free	Free
8466.30.80	6%	4%	2%	Free	Free	Free	Free	Free	Free	Free
8466.92.50	2.3%	Free	Free	Free	Free	Free	Free	Free	Free	Free
8466.93.30	4.3%	2.9%	1.4%	Free	Free	Free	Free	Free	Free	Free
8466.93.53	2.3%	Free	Free	Free	Free	Free	Free	Free	Free	Free

Annex II (continued)
-172-

HTS Subheading	December 17, 2001	2002	2003	2004	2005	2006	2007	2008	2009	2010
8466.93.75	4.3%	2.9%	1.4%	Free	Free	Free	Free	Free	Free	Free
8466.93.95	2.3%	Free	Free	Free	Free	Free	Free	Free	Free	Free
8466.94.65	2.3%	Free	Free	Free	Free	Free	Free	Free	Free	Free
8466.94.85	2.3%	Free	Free	Free	Free	Free	Free	Free	Free	Free
8467.11.10	2.2%	Free	Free	Free	Free	Free	Free	Free	Free	Free
8467.19.10	2.2%	Free	Free	Free	Free	Free	Free	Free	Free	Free
8468.10.00	1.4%	Free	Free	Free	Free	Free	Free	Free	Free	Free
8468.20.10	1.9%	Free	Free	Free	Free	Free	Free	Free	Free	Free
8468.80.10	1.4%	Free	Free	Free	Free	Free	Free	Free	Free	Free
8468.90.10	1.4%	Free	Free	Free	Free	Free	Free	Free	Free	Free
8472.10.00	0.8%	Free	Free	Free	Free	Free	Free	Free	Free	Free
8472.20.00	1%	Free	Free	Free	Free	Free	Free	Free	Free	Free
8472.30.00	0.9%	Free	Free	Free	Free	Free	Free	Free	Free	Free
8472.90.40	1.3%	Free	Free	Free	Free	Free	Free	Free	Free	Free
8472.90.95	0.9%	Free	Free	Free	Free	Free	Free	Free	Free	Free
8473.10.40	1%	Free	Free	Free	Free	Free	Free	Free	Free	Free
8473.10.60	1%	Free	Free	Free	Free	Free	Free	Free	Free	Free
8473.10.90	1%	Free	Free	Free	Free	Free	Free	Free	Free	Free
8473.40.95	0.9%	Free	Free	Free	Free	Free	Free	Free	Free	Free
8477.10.90	1.5%	Free	Free	Free	Free	Free	Free	Free	Free	Free
8477.20.00	1.5%	Free	Free	Free	Free	Free	Free	Free	Free	Free
8477.30.00	1.5%	Free	Free	Free	Free	Free	Free	Free	Free	Free
8477.40.80	1.5%	Free	Free	Free	Free	Free	Free	Free	Free	Free
8477.51.00	1.5%	Free	Free	Free	Free	Free	Free	Free	Free	Free
8477.59.80	1.5%	Free	Free	Free	Free	Free	Free	Free	Free	Free
8477.80.00	1.5%	Free	Free	Free	Free	Free	Free	Free	Free	Free
8477.90.25	1.5%	Free	Free	Free	Free	Free	Free	Free	Free	Free
8477.90.45	1.5%	Free	Free	Free	Free	Free	Free	Free	Free	Free
8477.90.65	1.5%	Free	Free	Free	Free	Free	Free	Free	Free	Free
8477.90.85	1.5%	Free	Free	Free	Free	Free	Free	Free	Free	Free
8479.50.00	1.2%	Free	Free	Free	Free	Free	Free	Free	Free	Free

Annex II (continued)
-173-

HTS Subheading	December 17, 2001	2002	2003	2004	2005	2006	2007	2008	2009	2010
8479.60.00	1.4%	Free	Free	Free	Free	Free	Free	Free	Free	Free
8479.89.55	1.4%	Free	Free	Free	Free	Free	Free	Free	Free	Free
8479.89.65	1.4%	Free	Free	Free	Free	Free	Free	Free	Free	Free
8479.89.97	1.2%	Free	Free	Free	Free	Free	Free	Free	Free	Free
8480.10.00	1.9%	Free	Free	Free	Free	Free	Free	Free	Free	Free
8480.20.00	1.7%	Free	Free	Free	Free	Free	Free	Free	Free	Free
8480.30.00	1.4%	Free	Free	Free	Free	Free	Free	Free	Free	Free
8480.41.00	1.5%	Free	Free	Free	Free	Free	Free	Free	Free	Free
8480.49.00	1.5%	Free	Free	Free	Free	Free	Free	Free	Free	Free
8480.71.80	1.5%	Free	Free	Free	Free	Free	Free	Free	Free	Free
8480.79.90	1.5%	Free	Free	Free	Free	Free	Free	Free	Free	Free
8481.10.00	1%	Free	Free	Free	Free	Free	Free	Free	Free	Free
8481.20.00	1%	Free	Free	Free	Free	Free	Free	Free	Free	Free
8481.30.10	1.5%	Free	Free	Free	Free	Free	Free	Free	Free	Free
8481.30.20	2.5%	Free	Free	Free	Free	Free	Free	Free	Free	Free
8481.30.90	1.5%	Free	Free	Free	Free	Free	Free	Free	Free	Free
8481.40.00	1%	Free	Free	Free	Free	Free	Free	Free	Free	Free
8481.80.10	2%	Free	Free	Free	Free	Free	Free	Free	Free	Free
8481.80.30	4.2%	2.8%	1.4%	Free	Free	Free	Free	Free	Free	Free
8481.80.50	1.5%	Free	Free	Free	Free	Free	Free	Free	Free	Free
8481.80.90	1%	Free	Free	Free	Free	Free	Free	Free	Free	Free
8481.90.10	1.5%	Free	Free	Free	Free	Free	Free	Free	Free	Free
8481.90.30	2.5%	Free	Free	Free	Free	Free	Free	Free	Free	Free
8481.90.50	1.5%	Free	Free	Free	Free	Free	Free	Free	Free	Free
8482.10.10	1.2%	Free	Free	Free	Free	Free	Free	Free	Free	Free
8482.10.50	6.7%	4.5%	2.2%	Free	Free	Free	Free	Free	Free	Free
8482.20.00	4.3%	2.9%	1.4%	Free	Free	Free	Free	Free	Free	Free
8482.30.00	4.3%	2.9%	1.4%	Free	Free	Free	Free	Free	Free	Free
8482.40.00	4.3%	2.9%	1.4%	Free	Free	Free	Free	Free	Free	Free
8482.50.00	4.3%	2.9%	1.4%	Free	Free	Free	Free	Free	Free	Free
8482.80.00	4.3%	2.9%	1.4%	Free	Free	Free	Free	Free	Free	Free

Annex II (continued)
-174-

HTS Subheading	December 17, 2001	2002	2003	2004	2005	2006	2007	2008	2009	2010
8482.91.00	2.2%	Free	Free	Free	Free	Free	Free	Free	Free	Free
8482.99.05	7.4%	4.9%	2.4%	Free	Free	Free	Free	Free	Free	Free
8482.99.15	4.3%	2.9%	1.4%	Free	Free	Free	Free	Free	Free	Free
8482.99.25	4.3%	2.9%	1.4%	Free	Free	Free	Free	Free	Free	Free
8482.99.35	7.4%	4.9%	2.4%	Free	Free	Free	Free	Free	Free	Free
8482.99.45	4.3%	2.9%	1.4%	Free	Free	Free	Free	Free	Free	Free
8482.99.65	4.3%	2.9%	1.4%	Free	Free	Free	Free	Free	Free	Free
8483.10.10	1.2%	Free	Free	Free	Free	Free	Free	Free	Free	Free
8483.10.30	1.2%	Free	Free	Free	Free	Free	Free	Free	Free	Free
8483.20.40	2.2%	Free	Free	Free	Free	Free	Free	Free	Free	Free
8483.20.80	2.2%	Free	Free	Free	Free	Free	Free	Free	Free	Free
8483.30.40	2.2%	Free	Free	Free	Free	Free	Free	Free	Free	Free
8483.30.80	2.2%	Free	Free	Free	Free	Free	Free	Free	Free	Free
8483.40.50	1.2%	Free	Free	Free	Free	Free	Free	Free	Free	Free
8483.40.70	12.5¢ each + 1.9%	Free	Free	Free	Free	Free	Free	Free	Free	Free
8483.40.80	1.9%	Free	Free	Free	Free	Free	Free	Free	Free	Free
8483.40.90	1.2%	Free	Free	Free	Free	Free	Free	Free	Free	Free
8483.50.40	4.2%	2.8%	1.4%	Free	Free	Free	Free	Free	Free	Free
8483.50.60	1.4%	Free	Free	Free	Free	Free	Free	Free	Free	Free
8483.50.90	1.4%	Free	Free	Free	Free	Free	Free	Free	Free	Free
8483.60.40	1.4%	Free	Free	Free	Free	Free	Free	Free	Free	Free
8483.60.80	1.4%	Free	Free	Free	Free	Free	Free	Free	Free	Free
8483.90.10	1.4%	Free	Free	Free	Free	Free	Free	Free	Free	Free
8483.90.20	2.2%	Free	Free	Free	Free	Free	Free	Free	Free	Free
8483.90.30	2.2%	Free	Free	Free	Free	Free	Free	Free	Free	Free
8483.90.50	1.2%	Free	Free	Free	Free	Free	Free	Free	Free	Free
8483.90.70	4.1%	2.7%	1.3%	Free	Free	Free	Free	Free	Free	Free
8483.90.80	1.4%	Free	Free	Free	Free	Free	Free	Free	Free	Free
8484.10.00	1.2%	Free	Free	Free	Free	Free	Free	Free	Free	Free
8484.20.00	1.9%	Free	Free	Free	Free	Free	Free	Free	Free	Free
8484.90.00	1.2%	Free	Free	Free	Free	Free	Free	Free	Free	Free

Annex II (continued)
-175-

HTS Subheading	December 17, 2001	2002	2003	2004	2005	2006	2007	2008	2009	2010
8485.90.00	1.9%	Free	Free	Free	Free	Free	Free	Free	Free	Free
8501.10.20	5%	3.3%	1.6%	Free	Free	Free	Free	Free	Free	Free
8501.10.40	2.2%	Free	Free	Free	Free	Free	Free	Free	Free	Free
8501.10.60	1.4%	Free	Free	Free	Free	Free	Free	Free	Free	Free
8501.20.20	1.6%	Free	Free	Free	Free	Free	Free	Free	Free	Free
8501.20.40	2%	Free	Free	Free	Free	Free	Free	Free	Free	Free
8501.20.50	1.6%	Free	Free	Free	Free	Free	Free	Free	Free	Free
8501.20.60	1.2%	Free	Free	Free	Free	Free	Free	Free	Free	Free
8501.31.20	1.4%	Free	Free	Free	Free	Free	Free	Free	Free	Free
8501.31.40	2%	Free	Free	Free	Free	Free	Free	Free	Free	Free
8501.31.50	1.6%	Free	Free	Free	Free	Free	Free	Free	Free	Free
8501.31.60	1.2%	Free	Free	Free	Free	Free	Free	Free	Free	Free
8501.31.80	1.2%	Free	Free	Free	Free	Free	Free	Free	Free	Free
8501.32.20	1.4%	Free	Free	Free	Free	Free	Free	Free	Free	Free
8501.32.60	1%	Free	Free	Free	Free	Free	Free	Free	Free	Free
8501.33.30	1.4%	Free	Free	Free	Free	Free	Free	Free	Free	Free
8501.33.40	1.4%	Free	Free	Free	Free	Free	Free	Free	Free	Free
8501.33.60	1.2%	Free	Free	Free	Free	Free	Free	Free	Free	Free
8501.34.30	1.4%	Free	Free	Free	Free	Free	Free	Free	Free	Free
8501.34.60	1%	Free	Free	Free	Free	Free	Free	Free	Free	Free
8501.40.20	1.6%	Free	Free	Free	Free	Free	Free	Free	Free	Free
8501.40.40	2%	Free	Free	Free	Free	Free	Free	Free	Free	Free
8501.40.50	1.6%	Free	Free	Free	Free	Free	Free	Free	Free	Free
8501.40.60	1.8%	Free	Free	Free	Free	Free	Free	Free	Free	Free
8501.51.20	1.2%	Free	Free	Free	Free	Free	Free	Free	Free	Free
8501.51.40	1.2%	Free	Free	Free	Free	Free	Free	Free	Free	Free
8501.51.50	1.6%	Free	Free	Free	Free	Free	Free	Free	Free	Free
8501.51.60	1.2%	Free	Free	Free	Free	Free	Free	Free	Free	Free
8501.52.40	1.8%	Free	Free	Free	Free	Free	Free	Free	Free	Free
8501.53.60	2.1%	Free	Free	Free	Free	Free	Free	Free	Free	Free
8501.53.80	1.4%	Free	Free	Free	Free	Free	Free	Free	Free	Free

Annex II (continued)
-176-

HTS Subheading	December 17, 2001	2002	2003	2004	2005	2006	2007	2008	2009	2010
8501.61.00	1.2%	Free	Free	Free	Free	Free	Free	Free	Free	Free
8501.62.00	1.2%	Free	Free	Free	Free	Free	Free	Free	Free	Free
8501.63.00	1.2%	Free	Free	Free	Free	Free	Free	Free	Free	Free
8501.64.00	1.2%	Free	Free	Free	Free	Free	Free	Free	Free	Free
8502.11.00	1.2%	Free	Free	Free	Free	Free	Free	Free	Free	Free
8502.12.00	1.2%	Free	Free	Free	Free	Free	Free	Free	Free	Free
8502.13.00	1%	Free	Free	Free	Free	Free	Free	Free	Free	Free
8502.20.00	1%	Free	Free	Free	Free	Free	Free	Free	Free	Free
8502.31.00	1.2%	Free	Free	Free	Free	Free	Free	Free	Free	Free
8502.39.00	1.2%	Free	Free	Free	Free	Free	Free	Free	Free	Free
8502.40.00	1.5%	Free	Free	Free	Free	Free	Free	Free	Free	Free
8503.00.20	1.2%	Free	Free	Free	Free	Free	Free	Free	Free	Free
8503.00.35	4.8%	3.2%	1.6%	Free	Free	Free	Free	Free	Free	Free
8503.00.65	1.5%	Free	Free	Free	Free	Free	Free	Free	Free	Free
8503.00.75	4.8%	3.2%	1.6%	Free	Free	Free	Free	Free	Free	Free
8503.00.95	1.5%	Free	Free	Free	Free	Free	Free	Free	Free	Free
8504.10.00	1.5%	Free	Free	Free	Free	Free	Free	Free	Free	Free
8504.23.00	0.8%	Free	Free	Free	Free	Free	Free	Free	Free	Free
8504.31.40	4.9%	3.3%	1.6%	Free	Free	Free	Free	Free	Free	Free
8504.31.60	0.8%	Free	Free	Free	Free	Free	Free	Free	Free	Free
8504.32.00	1.2%	Free	Free	Free	Free	Free	Free	Free	Free	Free
8504.33.00	0.8%	Free	Free	Free	Free	Free	Free	Free	Free	Free
8504.34.00	0.8%	Free	Free	Free	Free	Free	Free	Free	Free	Free
8504.40.40	0.7%	Free	Free	Free	Free	Free	Free	Free	Free	Free
8504.40.95	0.7%	Free	Free	Free	Free	Free	Free	Free	Free	Free
8504.50.80	1.5%	Free	Free	Free	Free	Free	Free	Free	Free	Free
8504.90.75	1.2%	Free	Free	Free	Free	Free	Free	Free	Free	Free
8504.90.95	1.2%	Free	Free	Free	Free	Free	Free	Free	Free	Free
8505.11.00	1%	Free	Free	Free	Free	Free	Free	Free	Free	Free
8505.19.00	2.4%	Free	Free	Free	Free	Free	Free	Free	Free	Free
8505.20.00	1.5%	Free	Free	Free	Free	Free	Free	Free	Free	Free

Annex II (continued)
-177-

HTS Subheading	December 17, 2001	2002	2003	2004	2005	2006	2007	2008	2009	2010
8505.90.80	0.6%	Free	Free	Free	Free	Free	Free	Free	Free	Free
8506.10.00	1.3%	Free	Free	Free	Free	Free	Free	Free	Free	Free
8506.30.10	1.3%	Free	Free	Free	Free	Free	Free	Free	Free	Free
8506.30.50	1.3%	Free	Free	Free	Free	Free	Free	Free	Free	Free
8506.40.10	1.3%	Free	Free	Free	Free	Free	Free	Free	Free	Free
8506.40.50	1.3%	Free	Free	Free	Free	Free	Free	Free	Free	Free
8506.50.00	1.3%	Free	Free	Free	Free	Free	Free	Free	Free	Free
8506.60.00	1.3%	Free	Free	Free	Free	Free	Free	Free	Free	Free
8506.80.00	1.3%	Free	Free	Free	Free	Free	Free	Free	Free	Free
8506.90.00	1.3%	Free	Free	Free	Free	Free	Free	Free	Free	Free
8507.10.00	1.7%	Free	Free	Free	Free	Free	Free	Free	Free	Free
8507.20.40	1.7%	Free	Free	Free	Free	Free	Free	Free	Free	Free
8507.20.80	1.7%	Free	Free	Free	Free	Free	Free	Free	Free	Free
8507.30.40	1.2%	Free	Free	Free	Free	Free	Free	Free	Free	Free
8507.30.80	1.2%	Free	Free	Free	Free	Free	Free	Free	Free	Free
8507.40.40	1.7%	Free	Free	Free	Free	Free	Free	Free	Free	Free
8507.40.80	1.7%	Free	Free	Free	Free	Free	Free	Free	Free	Free
8507.80.40	1.7%	Free	Free	Free	Free	Free	Free	Free	Free	Free
8507.80.80	1.7%	Free	Free	Free	Free	Free	Free	Free	Free	Free
8507.90.40	1.7%	Free	Free	Free	Free	Free	Free	Free	Free	Free
8507.90.80	1.7%	Free	Free	Free	Free	Free	Free	Free	Free	Free
8508.10.00	0.8%	Free	Free	Free	Free	Free	Free	Free	Free	Free
8509.40.00	2.1%	Free	Free	Free	Free	Free	Free	Free	Free	Free
8509.80.00	2.1%	Free	Free	Free	Free	Free	Free	Free	Free	Free
8509.90.05	1%	Free	Free	Free	Free	Free	Free	Free	Free	Free
8509.90.15	1%	Free	Free	Free	Free	Free	Free	Free	Free	Free
8509.90.25	1.7%	Free	Free	Free	Free	Free	Free	Free	Free	Free
8509.90.35	1.7%	Free	Free	Free	Free	Free	Free	Free	Free	Free
8509.90.45	2.1%	Free	Free	Free	Free	Free	Free	Free	Free	Free
8509.90.55	2.1%	Free	Free	Free	Free	Free	Free	Free	Free	Free
8510.20.00	2%	Free	Free	Free	Free	Free	Free	Free	Free	Free

Annex II (continued)
-178-

HTS Subheading	December 17, 2001	2002	2003	2004	2005	2006	2007	2008	2009	2010
8510.30.00	2.1%	Free	Free	Free	Free	Free	Free	Free	Free	Free
8510.90.30	2%	Free	Free	Free	Free	Free	Free	Free	Free	Free
8510.90.55	2.1%	Free	Free	Free	Free	Free	Free	Free	Free	Free
8511.10.00	1.2%	Free	Free	Free	Free	Free	Free	Free	Free	Free
8511.20.00	1.2%	Free	Free	Free	Free	Free	Free	Free	Free	Free
8511.30.00	1.2%	Free	Free	Free	Free	Free	Free	Free	Free	Free
8511.40.00	1.2%	Free	Free	Free	Free	Free	Free	Free	Free	Free
8511.50.00	1.2%	Free	Free	Free	Free	Free	Free	Free	Free	Free
8511.80.20	1.2%	Free	Free	Free	Free	Free	Free	Free	Free	Free
8511.80.60	1.2%	Free	Free	Free	Free	Free	Free	Free	Free	Free
8511.90.20	1.5%	Free	Free	Free	Free	Free	Free	Free	Free	Free
8511.90.60	1.2%	Free	Free	Free	Free	Free	Free	Free	Free	Free
8512.10.40	1.3%	Free	Free	Free	Free	Free	Free	Free	Free	Free
8512.20.40	1.2%	Free	Free	Free	Free	Free	Free	Free	Free	Free
8512.30.00	1.2%	Free	Free	Free	Free	Free	Free	Free	Free	Free
8512.40.20	1.2%	Free	Free	Free	Free	Free	Free	Free	Free	Free
8512.40.40	1.2%	Free	Free	Free	Free	Free	Free	Free	Free	Free
8512.90.20	1.2%	Free	Free	Free	Free	Free	Free	Free	Free	Free
8512.90.70	1.2%	Free	Free	Free	Free	Free	Free	Free	Free	Free
8512.90.90	1.2%	Free	Free	Free	Free	Free	Free	Free	Free	Free
8513.10.20	10%	7.5%	5%	2.5%	Free	Free	Free	Free	Free	Free
8513.10.40	1.7%	Free	Free	Free	Free	Free	Free	Free	Free	Free
8513.90.20	10%	7.5%	5%	2.5%	Free	Free	Free	Free	Free	Free
8513.90.40	1.7%	Free	Free	Free	Free	Free	Free	Free	Free	Free
8514.30.80	0.6%	Free	Free	Free	Free	Free	Free	Free	Free	Free
8515.11.00	1.2%	Free	Free	Free	Free	Free	Free	Free	Free	Free
8515.31.00	0.8%	Free	Free	Free	Free	Free	Free	Free	Free	Free
8515.39.00	0.8%	Free	Free	Free	Free	Free	Free	Free	Free	Free
8515.90.30	0.8%	Free	Free	Free	Free	Free	Free	Free	Free	Free
8516.29.00	1.8%	Free	Free	Free	Free	Free	Free	Free	Free	Free
8516.31.00	1.9%	Free	Free	Free	Free	Free	Free	Free	Free	Free

Annex II (continued)
-179-

HTS Subheading	December 17, 2001	2002	2003	2004	2005	2006	2007	2008	2009	2010
8516.32.00	1.9%	Free	Free	Free	Free	Free	Free	Free	Free	Free
8516.40.40	1.4%	Free	Free	Free	Free	Free	Free	Free	Free	Free
8516.50.00	1%	Free	Free	Free	Free	Free	Free	Free	Free	Free
8516.60.60	1.3%	Free	Free	Free	Free	Free	Free	Free	Free	Free
8516.71.00	1.8%	Free	Free	Free	Free	Free	Free	Free	Free	Free
8516.72.00	3.9%	2.6%	1.3%	Free	Free	Free	Free	Free	Free	Free
8516.79.00	1.3%	Free	Free	Free	Free	Free	Free	Free	Free	Free
8516.90.05	1.8%	Free	Free	Free	Free	Free	Free	Free	Free	Free
8516.90.15	1.9%	Free	Free	Free	Free	Free	Free	Free	Free	Free
8516.90.25	1.9%	Free	Free	Free	Free	Free	Free	Free	Free	Free
8516.90.85	1.9%	Free	Free	Free	Free	Free	Free	Free	Free	Free
8516.90.90	1.9%	Free	Free	Free	Free	Free	Free	Free	Free	Free
8518.10.80	2.4%	Free	Free	Free	Free	Free	Free	Free	Free	Free
8518.21.00	2.4%	Free	Free	Free	Free	Free	Free	Free	Free	Free
8518.22.00	2.4%	Free	Free	Free	Free	Free	Free	Free	Free	Free
8518.29.80	2.4%	Free	Free	Free	Free	Free	Free	Free	Free	Free
8518.30.20	2.4%	Free	Free	Free	Free	Free	Free	Free	Free	Free
8518.40.20	2.4%	Free	Free	Free	Free	Free	Free	Free	Free	Free
8518.50.00	2.4%	Free	Free	Free	Free	Free	Free	Free	Free	Free
8518.90.40	6.3%	4.2%	2.1%	Free	Free	Free	Free	Free	Free	Free
8518.90.80	2.4%	Free	Free	Free	Free	Free	Free	Free	Free	Free
8519.29.00	1.9%	Free	Free	Free	Free	Free	Free	Free	Free	Free
8519.31.00	1.9%	Free	Free	Free	Free	Free	Free	Free	Free	Free
8519.40.00	1.9%	Free	Free	Free	Free	Free	Free	Free	Free	Free
8519.93.40	1.8%	Free	Free	Free	Free	Free	Free	Free	Free	Free
8522.10.00	1.9%	Free	Free	Free	Free	Free	Free	Free	Free	Free
8522.90.25	1%	Free	Free	Free	Free	Free	Free	Free	Free	Free
8522.90.35	1%	Free	Free	Free	Free	Free	Free	Free	Free	Free
8522.90.55	1%	Free	Free	Free	Free	Free	Free	Free	Free	Free
8522.90.65	1%	Free	Free	Free	Free	Free	Free	Free	Free	Free
8522.90.75	1%	Free	Free	Free	Free	Free	Free	Free	Free	Free

Annex II (continued)
-180-

HTS Subheading	December 17, 2001	2002	2003	2004	2005	2006	2007	2008	2009	2010
8524.10.00	0.9%	Free	Free	Free	Free	Free	Free	Free	Free	Free
8524.39.80	1.3%	Free	Free	Free	Free	Free	Free	Free	Free	Free
8524.51.30	2.4¢/m² of recording surface	Free	Free	Free	Free	Free	Free	Free	Free	Free
8524.52.10	0.2¢/lin. m	0.1¢/lin. m	Free	Free	Free	Free	Free	Free	Free	Free
8524.52.20	2.4¢/m² of recording surface	Free	Free	Free	Free	Free	Free	Free	Free	Free
8524.53.20	2.4¢/m² of recording surface	Free	Free	Free	Free	Free	Free	Free	Free	Free
8525.10.30	0.9%	Free	Free	Free	Free	Free	Free	Free	Free	Free
8525.10.70	1.5%	Free	Free	Free	Free	Free	Free	Free	Free	Free
8525.30.30	1%	Free	Free	Free	Free	Free	Free	Free	Free	Free
8525.30.60	1%	Free	Free	Free	Free	Free	Free	Free	Free	Free
8525.30.90	1%	Free	Free	Free	Free	Free	Free	Free	Free	Free
8525.40.80	1%	Free	Free	Free	Free	Free	Free	Free	Free	Free
8526.92.00	2.4%	Free	Free	Free	Free	Free	Free	Free	Free	Free
8527.19.50	1.5%	Free	Free	Free	Free	Free	Free	Free	Free	Free
8527.21.10	1%	Free	Free	Free	Free	Free	Free	Free	Free	Free
8527.29.40	2.2%	Free	Free	Free	Free	Free	Free	Free	Free	Free
8527.29.80	2.2%	Free	Free	Free	Free	Free	Free	Free	Free	Free
8527.31.05	2.4%	Free	Free	Free	Free	Free	Free	Free	Free	Free
8527.31.40	0.5%	Free	Free	Free	Free	Free	Free	Free	Free	Free
8527.31.50	1.2%	Free	Free	Free	Free	Free	Free	Free	Free	Free
8527.32.50	1.5%	Free	Free	Free	Free	Free	Free	Free	Free	Free
8527.39.00	1.5%	Free	Free	Free	Free	Free	Free	Free	Free	Free
8527.90.95	4.5%	3%	1.5%	Free	Free	Free	Free	Free	Free	Free
8528.12.16	1.9%	Free	Free	Free	Free	Free	Free	Free	Free	Free
8528.12.24	2.5%	Free	Free	Free	Free	Free	Free	Free	Free	Free
8528.12.28	1.9%	Free	Free	Free	Free	Free	Free	Free	Free	Free
8528.12.32	2.5%	Free	Free	Free	Free	Free	Free	Free	Free	Free

Annex II (continued)
-181-

HTS Subheading	December 17, 2001	2002	2003	2004	2005	2006	2007	2008	2009	2010
8528.12.36	1.9%	Free	Free	Free	Free	Free	Free	Free	Free	Free
8528.12.40	2.5%	Free	Free	Free	Free	Free	Free	Free	Free	Free
8528.12.44	1.9%	Free	Free	Free	Free	Free	Free	Free	Free	Free
8528.12.48	2.5%	Free	Free	Free	Free	Free	Free	Free	Free	Free
8528.12.52	1.9%	Free	Free	Free	Free	Free	Free	Free	Free	Free
8528.12.56	2.5%	Free	Free	Free	Free	Free	Free	Free	Free	Free
8528.12.64	1.9%	Free	Free	Free	Free	Free	Free	Free	Free	Free
8528.12.72	2.5%	Free	Free	Free	Free	Free	Free	Free	Free	Free
8528.12.80	1.9%	Free	Free	Free	Free	Free	Free	Free	Free	Free
8528.12.97	2.5%	Free	Free	Free	Free	Free	Free	Free	Free	Free
8528.13.00	2.5%	Free	Free	Free	Free	Free	Free	Free	Free	Free
8528.21.19	1.9%	Free	Free	Free	Free	Free	Free	Free	Free	Free
8528.21.29	2.5%	Free	Free	Free	Free	Free	Free	Free	Free	Free
8528.21.34	1.9%	Free	Free	Free	Free	Free	Free	Free	Free	Free
8528.21.39	2.5%	Free	Free	Free	Free	Free	Free	Free	Free	Free
8528.21.41	1.9%	Free	Free	Free	Free	Free	Free	Free	Free	Free
8528.21.42	2.5%	Free	Free	Free	Free	Free	Free	Free	Free	Free
8528.21.44	1.9%	Free	Free	Free	Free	Free	Free	Free	Free	Free
8528.21.49	2.5%	Free	Free	Free	Free	Free	Free	Free	Free	Free
8528.21.51	1.9%	Free	Free	Free	Free	Free	Free	Free	Free	Free
8528.21.52	2.5%	Free	Free	Free	Free	Free	Free	Free	Free	Free
8528.21.60	1.9%	Free	Free	Free	Free	Free	Free	Free	Free	Free
8528.21.70	2.5%	Free	Free	Free	Free	Free	Free	Free	Free	Free
8528.21.80	1.9%	Free	Free	Free	Free	Free	Free	Free	Free	Free
8528.21.90	2.5%	Free	Free	Free	Free	Free	Free	Free	Free	Free
8528.22.00	2.5%	Free	Free	Free	Free	Free	Free	Free	Free	Free
8528.30.30	1.9%	Free	Free	Free	Free	Free	Free	Free	Free	Free
8528.30.40	2.5%	Free	Free	Free	Free	Free	Free	Free	Free	Free
8528.30.50	1.9%	Free	Free	Free	Free	Free	Free	Free	Free	Free
8528.30.60	2.5%	Free	Free	Free	Free	Free	Free	Free	Free	Free
8528.30.64	1.9%	Free	Free	Free	Free	Free	Free	Free	Free	Free

Annex II (continued)
-182-

HTS Subheading	December 17, 2001	2002	2003	2004	2005	2006	2007	2008	2009	2010
8528.30.68	2.5%	Free	Free	Free	Free	Free	Free	Free	Free	Free
8528.30.72	1.9%	Free	Free	Free	Free	Free	Free	Free	Free	Free
8528.30.78	2.5%	Free	Free	Free	Free	Free	Free	Free	Free	Free
8528.30.90	2.5%	Free	Free	Free	Free	Free	Free	Free	Free	Free
8529.10.20	0.9%	Free	Free	Free	Free	Free	Free	Free	Free	Free
8529.10.90	1.5%	Free	Free	Free	Free	Free	Free	Free	Free	Free
8529.90.01	1.5%	Free	Free	Free	Free	Free	Free	Free	Free	Free
8529.90.03	2%	Free	Free	Free	Free	Free	Free	Free	Free	Free
8529.90.09	1.6%	Free	Free	Free	Free	Free	Free	Free	Free	Free
8529.90.13	1.4%	Free	Free	Free	Free	Free	Free	Free	Free	Free
8529.90.16	1.6%	Free	Free	Free	Free	Free	Free	Free	Free	Free
8529.90.19	1.6%	Free	Free	Free	Free	Free	Free	Free	Free	Free
8529.90.26	1.6%	Free	Free	Free	Free	Free	Free	Free	Free	Free
8529.90.29	1.5%	Free	Free	Free	Free	Free	Free	Free	Free	Free
8529.90.33	2%	Free	Free	Free	Free	Free	Free	Free	Free	Free
8529.90.39	1.4%	Free	Free	Free	Free	Free	Free	Free	Free	Free
8529.90.43	2%	Free	Free	Free	Free	Free	Free	Free	Free	Free
8529.90.49	1.4%	Free	Free	Free	Free	Free	Free	Free	Free	Free
8529.90.53	1.4%	Free	Free	Free	Free	Free	Free	Free	Free	Free
8529.90.63	1.6%	Free	Free	Free	Free	Free	Free	Free	Free	Free
8529.90.69	1.4%	Free	Free	Free	Free	Free	Free	Free	Free	Free
8529.90.73	1.6%	Free	Free	Free	Free	Free	Free	Free	Free	Free
8529.90.81	1.6%	Free	Free	Free	Free	Free	Free	Free	Free	Free
8529.90.83	1.4%	Free	Free	Free	Free	Free	Free	Free	Free	Free
8529.90.88	2%	Free	Free	Free	Free	Free	Free	Free	Free	Free
8529.90.93	1.4%	Free	Free	Free	Free	Free	Free	Free	Free	Free
8529.90.95	1.6%	Free	Free	Free	Free	Free	Free	Free	Free	Free
8529.90.97	1.6%	Free	Free	Free	Free	Free	Free	Free	Free	Free
8531.10.00	0.6%	Free	Free	Free	Free	Free	Free	Free	Free	Free
8531.80.90	0.6%	Free	Free	Free	Free	Free	Free	Free	Free	Free
8531.90.30	0.6%	Free	Free	Free	Free	Free	Free	Free	Free	Free

Annex II (continued)
-183-

HTS Subheading	December 17, 2001	2002	2003	2004	2005	2006	2007	2008	2009	2010
8531.90.90	0.6%	Free	Free	Free	Free	Free	Free	Free	Free	Free
8535.10.00	1.3%	Free	Free	Free	Free	Free	Free	Free	Free	Free
8535.21.00	1.3%	Free	Free	Free	Free	Free	Free	Free	Free	Free
8535.29.00	1%	Free	Free	Free	Free	Free	Free	Free	Free	Free
8535.30.00	1.3%	Free	Free	Free	Free	Free	Free	Free	Free	Free
8535.40.00	1.3%	Free	Free	Free	Free	Free	Free	Free	Free	Free
8535.90.40	1.3%	Free	Free	Free	Free	Free	Free	Free	Free	Free
8535.90.80	1.3%	Free	Free	Free	Free	Free	Free	Free	Free	Free
8536.10.00	1.3%	Free	Free	Free	Free	Free	Free	Free	Free	Free
8536.20.00	1.3%	Free	Free	Free	Free	Free	Free	Free	Free	Free
8536.30.40	1.3%	Free	Free	Free	Free	Free	Free	Free	Free	Free
8536.30.80	1.3%	Free	Free	Free	Free	Free	Free	Free	Free	Free
8536.41.00	1.3%	Free	Free	Free	Free	Free	Free	Free	Free	Free
8536.49.00	1.3%	Free	Free	Free	Free	Free	Free	Free	Free	Free
8536.50.40	1.3%	Free	Free	Free	Free	Free	Free	Free	Free	Free
8536.50.90	1.3%	Free	Free	Free	Free	Free	Free	Free	Free	Free
8536.61.00	1.3%	Free	Free	Free	Free	Free	Free	Free	Free	Free
8536.69.80	1.3%	Free	Free	Free	Free	Free	Free	Free	Free	Free
8536.90.80	1.3%	Free	Free	Free	Free	Free	Free	Free	Free	Free
8537.10.30	1.3%	Free	Free	Free	Free	Free	Free	Free	Free	Free
8537.10.60	1.3%	Free	Free	Free	Free	Free	Free	Free	Free	Free
8537.10.90	1.3%	Free	Free	Free	Free	Free	Free	Free	Free	Free
8537.20.00	1.3%	Free	Free	Free	Free	Free	Free	Free	Free	Free
8538.10.00	1.8%	Free	Free	Free	Free	Free	Free	Free	Free	Free
8538.90.30	1.7%	Free	Free	Free	Free	Free	Free	Free	Free	Free
8538.90.40	1.7%	Free	Free	Free	Free	Free	Free	Free	Free	Free
8538.90.60	1.7%	Free	Free	Free	Free	Free	Free	Free	Free	Free
8539.10.00	1%	Free	Free	Free	Free	Free	Free	Free	Free	Free
8539.21.40	1.3%	Free	Free	Free	Free	Free	Free	Free	Free	Free
8539.22.40	4.3%	2.9%	1.4%	Free	Free	Free	Free	Free	Free	Free
8539.22.80	1.3%	Free	Free	Free	Free	Free	Free	Free	Free	Free

Annex II (continued)
-184-

HTS Subheading	December 17, 2001	2002	2003	2004	2005	2006	2007	2008	2009	2010
8539.29.10	4.3%	2.9%	1.4%	Free	Free	Free	Free	Free	Free	Free
8539.29.20	3.9%	2.6%	1.3%	Free	Free	Free	Free	Free	Free	Free
8539.29.40	1.3%	Free	Free	Free	Free	Free	Free	Free	Free	Free
8539.31.00	1.2%	Free	Free	Free	Free	Free	Free	Free	Free	Free
8539.32.00	1.2%	Free	Free	Free	Free	Free	Free	Free	Free	Free
8539.39.00	1.2%	Free	Free	Free	Free	Free	Free	Free	Free	Free
8539.41.00	1.3%	Free	Free	Free	Free	Free	Free	Free	Free	Free
8539.49.00	1.2%	Free	Free	Free	Free	Free	Free	Free	Free	Free
8539.90.00	1.3%	Free	Free	Free	Free	Free	Free	Free	Free	Free
8540.11.10	12%	9%	6%	3%	Free	Free	Free	Free	Free	Free
8540.11.24	5.6%	3.7%	1.8%	Free	Free	Free	Free	Free	Free	Free
8540.11.28	12%	9%	6%	3%	Free	Free	Free	Free	Free	Free
8540.11.30	12%	9%	6%	3%	Free	Free	Free	Free	Free	Free
8540.11.44	5.6%	3.7%	1.8%	Free	Free	Free	Free	Free	Free	Free
8540.11.48	12%	9%	6%	3%	Free	Free	Free	Free	Free	Free
8540.11.50	12%	9%	6%	3%	Free	Free	Free	Free	Free	Free
8540.12.10	1.8%	Free	Free	Free	Free	Free	Free	Free	Free	Free
8540.12.20	1.8%	Free	Free	Free	Free	Free	Free	Free	Free	Free
8540.12.50	1.6%	Free	Free	Free	Free	Free	Free	Free	Free	Free
8540.12.70	1.6%	Free	Free	Free	Free	Free	Free	Free	Free	Free
8540.20.20	4.5%	3%	1.5%	Free	Free	Free	Free	Free	Free	Free
8540.20.40	1.6%	Free	Free	Free	Free	Free	Free	Free	Free	Free
8540.40.00	1.5%	Free	Free	Free	Free	Free	Free	Free	Free	Free
8540.50.00	1.5%	Free	Free	Free	Free	Free	Free	Free	Free	Free
8540.60.00	1.5%	Free	Free	Free	Free	Free	Free	Free	Free	Free
8540.71.40	1.8%	Free	Free	Free	Free	Free	Free	Free	Free	Free
8540.72.00	1.6%	Free	Free	Free	Free	Free	Free	Free	Free	Free
8540.79.00	1.8%	Free	Free	Free	Free	Free	Free	Free	Free	Free
8540.81.00	2.1%	Free	Free	Free	Free	Free	Free	Free	Free	Free
8540.89.00	1.8%	Free	Free	Free	Free	Free	Free	Free	Free	Free
8540.91.15	4%	2.7%	1.3%	Free	Free	Free	Free	Free	Free	Free

Annex II (continued)
-185-

HTS Subheading	December 17, 2001	2002	2003	2004	2005	2006	2007	2008	2009	2010
8540.91.50	4%	2.7%	1.3%	Free	Free	Free	Free	Free	Free	Free
8543.19.00	0.9%	Free	Free	Free	Free	Free	Free	Free	Free	Free
8543.20.00	1.3%	Free	Free	Free	Free	Free	Free	Free	Free	Free
8543.30.00	1.3%	Free	Free	Free	Free	Free	Free	Free	Free	Free
8543.40.00	1.3%	Free	Free	Free	Free	Free	Free	Free	Free	Free
8543.89.40	1.3%	Free	Free	Free	Free	Free	Free	Free	Free	Free
8543.89.60	1.3%	Free	Free	Free	Free	Free	Free	Free	Free	Free
8543.89.70	1%	Free	Free	Free	Free	Free	Free	Free	Free	Free
8543.89.80	1.3%	Free	Free	Free	Free	Free	Free	Free	Free	Free
8543.89.96	1.3%	Free	Free	Free	Free	Free	Free	Free	Free	Free
8543.90.15	1.3%	Free	Free	Free	Free	Free	Free	Free	Free	Free
8543.90.35	1.3%	Free	Free	Free	Free	Free	Free	Free	Free	Free
8543.90.68	1.3%	Free	Free	Free	Free	Free	Free	Free	Free	Free
8543.90.88	1.3%	Free	Free	Free	Free	Free	Free	Free	Free	Free
8544.11.00	1.7%	Free	Free	Free	Free	Free	Free	Free	Free	Free
8544.19.00	1.9%	Free	Free	Free	Free	Free	Free	Free	Free	Free
8544.20.00	3.9%	2.6%	1.3%	Free	Free	Free	Free	Free	Free	Free
8544.30.00	2.5%	Free	Free	Free	Free	Free	Free	Free	Free	Free
8544.41.80	1.3%	Free	Free	Free	Free	Free	Free	Free	Free	Free
8544.49.80	1.7%	Free	Free	Free	Free	Free	Free	Free	Free	Free
8544.51.90	1.3%	Free	Free	Free	Free	Free	Free	Free	Free	Free
8544.59.20	2.6%	Free	Free	Free	Free	Free	Free	Free	Free	Free
8544.59.40	1.9%	Free	Free	Free	Free	Free	Free	Free	Free	Free
8544.60.20	1.8%	Free	Free	Free	Free	Free	Free	Free	Free	Free
8544.60.40	1.7%	Free	Free	Free	Free	Free	Free	Free	Free	Free
8544.60.60	1.6%	Free	Free	Free	Free	Free	Free	Free	Free	Free
8546.10.00	1.4%	Free	Free	Free	Free	Free	Free	Free	Free	Free
8546.20.00	1.5%	Free	Free	Free	Free	Free	Free	Free	Free	Free
8547.10.40	1.5%	Free	Free	Free	Free	Free	Free	Free	Free	Free
8547.10.80	1.5%	Free	Free	Free	Free	Free	Free	Free	Free	Free
8547.90.00	2.3%	Free	Free	Free	Free	Free	Free	Free	Free	Free

Annex II (continued)
-186-

HTS Subheading	December 17, 2001	2002	2003	2004	2005	2006	2007	2008	2009	2010
8603.10.00	2.5%	Free	Free	Free	Free	Free	Free	Free	Free	Free
8603.90.00	2.5%	Free	Free	Free	Free	Free	Free	Free	Free	Free
8604.00.00	1.4%	Free	Free	Free	Free	Free	Free	Free	Free	Free
8605.00.00	12.4%	9.3%	6.2%	3.1%	Free	Free	Free	Free	Free	Free
8606.10.00	12.4%	9.3%	6.2%	3.1%	Free	Free	Free	Free	Free	Free
8606.20.00	12.4%	9.3%	6.2%	3.1%	Free	Free	Free	Free	Free	Free
8606.30.00	12.4%	9.3%	6.2%	3.1%	Free	Free	Free	Free	Free	Free
8606.91.00	12.4%	9.3%	6.2%	3.1%	Free	Free	Free	Free	Free	Free
8606.92.00	12.4%	9.3%	6.2%	3.1%	Free	Free	Free	Free	Free	Free
8606.99.00	12.4%	9.3%	6.2%	3.1%	Free	Free	Free	Free	Free	Free
8607.12.00	1.8%	Free	Free	Free	Free	Free	Free	Free	Free	Free
8607.19.03	0.2%	Free	Free	Free	Free	Free	Free	Free	Free	Free
8607.19.06	0.2%	Free	Free	Free	Free	Free	Free	Free	Free	Free
8607.19.30	1.8%	Free	Free	Free	Free	Free	Free	Free	Free	Free
8607.19.90	1.3%	Free	Free	Free	Free	Free	Free	Free	Free	Free
8607.21.10	1.8%	Free	Free	Free	Free	Free	Free	Free	Free	Free
8607.21.50	1.9%	Free	Free	Free	Free	Free	Free	Free	Free	Free
8607.29.10	1.8%	Free	Free	Free	Free	Free	Free	Free	Free	Free
8607.29.50	1.3%	Free	Free	Free	Free	Free	Free	Free	Free	Free
8607.30.10	1.8%	Free	Free	Free	Free	Free	Free	Free	Free	Free
8607.30.50	1.3%	Free	Free	Free	Free	Free	Free	Free	Free	Free
8607.99.10	1.4%	Free	Free	Free	Free	Free	Free	Free	Free	Free
8607.99.50	1.5%	Free	Free	Free	Free	Free	Free	Free	Free	Free
8608.00.00	1.9%	Free	Free	Free	Free	Free	Free	Free	Free	Free
8701.20.00	2%	Free	Free	Free	Free	Free	Free	Free	Free	Free
8702.10.30	1%	Free	Free	Free	Free	Free	Free	Free	Free	Free
8702.10.60	1%	Free	Free	Free	Free	Free	Free	Free	Free	Free
8702.90.30	1%	Free	Free	Free	Free	Free	Free	Free	Free	Free
8702.90.60	1%	Free	Free	Free	Free	Free	Free	Free	Free	Free
8703.10.10	1.2%	Free	Free	Free	Free	Free	Free	Free	Free	Free
8703.10.50	1.2%	Free	Free	Free	Free	Free	Free	Free	Free	Free

Annex II (continued)
-187-

HTS Subheading	December 17, 2001	2002	2003	2004	2005	2006	2007	2008	2009	2010
8703.21.00	1.2%	Free	Free	Free	Free	Free	Free	Free	Free	Free
8703.22.00	1.2%	Free	Free	Free	Free	Free	Free	Free	Free	Free
8703.23.00	1.2%	Free	Free	Free	Free	Free	Free	Free	Free	Free
8703.24.00	1.2%	Free	Free	Free	Free	Free	Free	Free	Free	Free
8703.31.00	1.2%	Free	Free	Free	Free	Free	Free	Free	Free	Free
8703.32.00	1.2%	Free	Free	Free	Free	Free	Free	Free	Free	Free
8703.33.00	1.2%	Free	Free	Free	Free	Free	Free	Free	Free	Free
8703.90.00	1.2%	Free	Free	Free	Free	Free	Free	Free	Free	Free
8704.21.00	22.5%	20%	17.5%	15%	12.5%	10%	7.5%	5%	2.5%	Free
8704.22.10	2%	Free	Free	Free	Free	Free	Free	Free	Free	Free
8704.22.50	22.5%	20%	17.5%	15%	12.5%	10%	7.5%	5%	2.5%	Free
8704.23.00	22.5%	20%	17.5%	15%	12.5%	10%	7.5%	5%	2.5%	Free
8704.31.00	22.5%	20%	17.5%	15%	12.5%	10%	7.5%	5%	2.5%	Free
8704.32.00	22.5%	20%	17.5%	15%	12.5%	10%	7.5%	5%	2.5%	Free
8704.90.00	22.5%	20%	17.5%	15%	12.5%	10%	7.5%	5%	2.5%	Free
8706.00.03	2%	Free	Free	Free	Free	Free	Free	Free	Free	Free
8706.00.05	2%	Free	Free	Free	Free	Free	Free	Free	Free	Free
8706.00.15	1.2%	Free	Free	Free	Free	Free	Free	Free	Free	Free
8706.00.25	0.8%	Free	Free	Free	Free	Free	Free	Free	Free	Free
8706.00.50	0.7%	Free	Free	Free	Free	Free	Free	Free	Free	Free
8707.10.00	1.2%	Free	Free	Free	Free	Free	Free	Free	Free	Free
8707.90.50	2%	Free	Free	Free	Free	Free	Free	Free	Free	Free
8708.10.30	1.2%	Free	Free	Free	Free	Free	Free	Free	Free	Free
8708.10.60	1.2%	Free	Free	Free	Free	Free	Free	Free	Free	Free
8708.21.00	1.2%	Free	Free	Free	Free	Free	Free	Free	Free	Free
8708.29.10	1.2%	Free	Free	Free	Free	Free	Free	Free	Free	Free
8708.29.15	1.2%	Free	Free	Free	Free	Free	Free	Free	Free	Free
8708.29.20	1.2%	Free	Free	Free	Free	Free	Free	Free	Free	Free
8708.29.50	1.2%	Free	Free	Free	Free	Free	Free	Free	Free	Free
8708.31.50	1.2%	Free	Free	Free	Free	Free	Free	Free	Free	Free
8708.39.50	1.2%	Free	Free	Free	Free	Free	Free	Free	Free	Free

Annex II (continued)
-188-

HTS Subheading	December 17, 2001	2002	2003	2004	2005	2006	2007	2008	2009	2010
8708.40.10	1.2%	Free	Free	Free	Free	Free	Free	Free	Free	Free
8708.40.20	1.2%	Free	Free	Free	Free	Free	Free	Free	Free	Free
8708.40.50	1.2%	Free	Free	Free	Free	Free	Free	Free	Free	Free
8708.50.50	1.2%	Free	Free	Free	Free	Free	Free	Free	Free	Free
8708.50.80	1.2%	Free	Free	Free	Free	Free	Free	Free	Free	Free
8708.60.50	1.2%	Free	Free	Free	Free	Free	Free	Free	Free	Free
8708.60.80	1.2%	Free	Free	Free	Free	Free	Free	Free	Free	Free
8708.70.45	1.2%	Free	Free	Free	Free	Free	Free	Free	Free	Free
8708.70.60	1.2%	Free	Free	Free	Free	Free	Free	Free	Free	Free
8708.80.30	1.2%	Free	Free	Free	Free	Free	Free	Free	Free	Free
8708.80.45	1.2%	Free	Free	Free	Free	Free	Free	Free	Free	Free
8708.91.50	1.2%	Free	Free	Free	Free	Free	Free	Free	Free	Free
8708.92.50	1.2%	Free	Free	Free	Free	Free	Free	Free	Free	Free
8708.93.60	1.2%	Free	Free	Free	Free	Free	Free	Free	Free	Free
8708.93.75	1.2%	Free	Free	Free	Free	Free	Free	Free	Free	Free
8708.94.50	1.2%	Free	Free	Free	Free	Free	Free	Free	Free	Free
8708.99.55	1.2%	Free	Free	Free	Free	Free	Free	Free	Free	Free
8708.99.58	1.2%	Free	Free	Free	Free	Free	Free	Free	Free	Free
8708.99.61	1.2%	Free	Free	Free	Free	Free	Free	Free	Free	Free
8708.99.64	1.2%	Free	Free	Free	Free	Free	Free	Free	Free	Free
8708.99.67	1.2%	Free	Free	Free	Free	Free	Free	Free	Free	Free
8708.99.70	1.2%	Free	Free	Free	Free	Free	Free	Free	Free	Free
8708.99.73	1.2%	Free	Free	Free	Free	Free	Free	Free	Free	Free
8708.99.80	1.2%	Free	Free	Free	Free	Free	Free	Free	Free	Free
8711.40.60	1.2%	Free	Free	Free	Free	Free	Free	Free	Free	Free
8711.50.00	1.2%	Free	Free	Free	Free	Free	Free	Free	Free	Free
8712.00.15	8.8%	6.6%	4.4%	2.2%	Free	Free	Free	Free	Free	Free
8712.00.25	4.1%	2.7%	1.3%	Free	Free	Free	Free	Free	Free	Free
8712.00.35	8.8%	6.6%	4.4%	2.2%	Free	Free	Free	Free	Free	Free
8712.00.44	4.1%	2.7%	1.3%	Free	Free	Free	Free	Free	Free	Free
8712.00.48	8.8%	6.6%	4.4%	2.2%	Free	Free	Free	Free	Free	Free

Annex II (continued)
-189-

HTS Subheading	December 17, 2001	2002	2003	2004	2005	2006	2007	2008	2009	2010
8712.00.50	1.8%	Free	Free	Free	Free	Free	Free	Free	Free	Free
8714.91.20	1.9%	Free	Free	Free	Free	Free	Free	Free	Free	Free
8714.91.30	1.9%	Free	Free	Free	Free	Free	Free	Free	Free	Free
8714.91.50	4.5%	3%	1.5%	Free	Free	Free	Free	Free	Free	Free
8714.92.10	2.5%	Free	Free	Free	Free	Free	Free	Free	Free	Free
8714.92.50	7.5%	5%	2.5%	Free	Free	Free	Free	Free	Free	Free
8714.93.28	1.5%	Free	Free	Free	Free	Free	Free	Free	Free	Free
8714.93.35	7.5%	5%	2.5%	Free	Free	Free	Free	Free	Free	Free
8714.94.90	7.5%	5%	2.5%	Free	Free	Free	Free	Free	Free	Free
8714.95.00	6%	4%	2%	Free	Free	Free	Free	Free	Free	Free
8714.96.10	6%	4%	2%	Free	Free	Free	Free	Free	Free	Free
8714.96.90	7.5%	5%	2.5%	Free	Free	Free	Free	Free	Free	Free
8714.99.80	7.5%	5%	2.5%	Free	Free	Free	Free	Free	Free	Free
8715.00.00	2.2%	Free	Free	Free	Free	Free	Free	Free	Free	Free
8716.80.50	1.6%	Free	Free	Free	Free	Free	Free	Free	Free	Free
8716.90.30	4.2%	2.8%	1.4%	Free	Free	Free	Free	Free	Free	Free
8716.90.50	1.5%	Free	Free	Free	Free	Free	Free	Free	Free	Free
8804.00.00	1.5%	Free	Free	Free	Free	Free	Free	Free	Free	Free
8903.10.00	1.2%	Free	Free	Free	Free	Free	Free	Free	Free	Free
8903.91.00	0.7%	Free	Free	Free	Free	Free	Free	Free	Free	Free
8903.92.00	0.7%	Free	Free	Free	Free	Free	Free	Free	Free	Free
8903.99.15	1.3%	Free	Free	Free	Free	Free	Free	Free	Free	Free
8903.99.20	0.5%	Free	Free	Free	Free	Free	Free	Free	Free	Free
8903.99.90	0.5%	Free	Free	Free	Free	Free	Free	Free	Free	Free
9001.10.00	5%	3.3%	1.6%	Free	Free	Free	Free	Free	Free	Free
9001.20.00	1.7%	Free	Free	Free	Free	Free	Free	Free	Free	Free
9001.30.00	1%	Free	Free	Free	Free	Free	Free	Free	Free	Free
9001.40.00	1%	Free	Free	Free	Free	Free	Free	Free	Free	Free
9001.50.00	1%	Free	Free	Free	Free	Free	Free	Free	Free	Free
9001.90.40	1%	Free	Free	Free	Free	Free	Free	Free	Free	Free
9001.90.50	1.4%	Free	Free	Free	Free	Free	Free	Free	Free	Free

Annex II (continued)
-190-

HTS Subheading	December 17, 2001	2002	2003	2004	2005	2006	2007	2008	2009	2010
9001.90.60	1.4%	Free	Free	Free	Free	Free	Free	Free	Free	Free
9001.90.80	0.5%	Free	Free	Free	Free	Free	Free	Free	Free	Free
9001.90.90	1.4%	Free	Free	Free	Free	Free	Free	Free	Free	Free
9002.11.40	1.2%	Free	Free	Free	Free	Free	Free	Free	Free	Free
9002.11.90	1.1%	Free	Free	Free	Free	Free	Free	Free	Free	Free
9002.19.00	1.1%	Free	Free	Free	Free	Free	Free	Free	Free	Free
9002.20.40	1%	Free	Free	Free	Free	Free	Free	Free	Free	Free
9002.20.80	1.4%	Free	Free	Free	Free	Free	Free	Free	Free	Free
9002.90.20	1.4%	Free	Free	Free	Free	Free	Free	Free	Free	Free
9002.90.40	1.4%	Free	Free	Free	Free	Free	Free	Free	Free	Free
9002.90.70	0.5%	Free	Free	Free	Free	Free	Free	Free	Free	Free
9002.90.95	1.5%	Free	Free	Free	Free	Free	Free	Free	Free	Free
9003.11.00	1.2%	Free	Free	Free	Free	Free	Free	Free	Free	Free
9003.90.00	1.2%	Free	Free	Free	Free	Free	Free	Free	Free	Free
9004.10.00	1%	Free	Free	Free	Free	Free	Free	Free	Free	Free
9004.90.00	1.2%	Free	Free	Free	Free	Free	Free	Free	Free	Free
9005.80.40	6%	4%	2%	Free	Free	Free	Free	Free	Free	Free
9005.80.60	4.5%	3%	1.5%	Free	Free	Free	Free	Free	Free	Free
9005.90.40	The rate applicable to the article of which it is a part or accessory	Free	Free	Free	Free	Free	Free	Free	Free	Free
9005.90.80	The rate applicable to the article of which it is a part or accessory	Free	Free	Free	Free	Free	Free	Free	Free	Free
9006.40.60	5.1%	3.4%	1.7%	Free	Free	Free	Free	Free	Free	Free
9006.52.30	2%	Free	Free	Free	Free	Free	Free	Free	Free	Free
9006.52.60	5.1%	3.4%	1.7%	Free	Free	Free	Free	Free	Free	Free
9006.59.40	2%	Free	Free	Free	Free	Free	Free	Free	Free	Free

Annex II (continued)
-191-

HTS Subheading	December 17, 2001	2002	2003	2004	2005	2006	2007	2008	2009	2010
9006.59.60	5.1%	3.4%	1.7%	Free	Free	Free	Free	Free	Free	Free
9006.91.00	4.3%	2.9%	1.4%	Free	Free	Free	Free	Free	Free	Free
9006.99.00	1.9%	Free	Free	Free	Free	Free	Free	Free	Free	Free
9007.20.40	2.4%	Free	Free	Free	Free	Free	Free	Free	Free	Free
9007.20.80	1.7%	Free	Free	Free	Free	Free	Free	Free	Free	Free
9007.91.80	1.9%	Free	Free	Free	Free	Free	Free	Free	Free	Free
9007.92.00	1.7%	Free	Free	Free	Free	Free	Free	Free	Free	Free
9008.10.00	5.2%	3.5%	1.7%	Free	Free	Free	Free	Free	Free	Free
9008.20.80	1.7%	Free	Free	Free	Free	Free	Free	Free	Free	Free
9008.30.00	2.3%	Free	Free	Free	Free	Free	Free	Free	Free	Free
9008.90.80	1.4%	Free	Free	Free	Free	Free	Free	Free	Free	Free
9009.12.00	1.8%	Free	Free	Free	Free	Free	Free	Free	Free	Free
9009.22.00	0.9%	Free	Free	Free	Free	Free	Free	Free	Free	Free
9010.10.00	1.2%	Free	Free	Free	Free	Free	Free	Free	Free	Free
9010.50.30	1.9%	Free	Free	Free	Free	Free	Free	Free	Free	Free
9010.50.40	2.2%	Free	Free	Free	Free	Free	Free	Free	Free	Free
9010.60.00	1.3%	Free	Free	Free	Free	Free	Free	Free	Free	Free
9010.90.40	1.7%	Free	Free	Free	Free	Free	Free	Free	Free	Free
9010.90.90	1.4%	Free	Free	Free	Free	Free	Free	Free	Free	Free
9011.10.40	1.9%	Free	Free	Free	Free	Free	Free	Free	Free	Free
9011.10.80	5.4%	3.6%	1.8%	Free	Free	Free	Free	Free	Free	Free
9011.20.40	1.9%	Free	Free	Free	Free	Free	Free	Free	Free	Free
9011.20.80	5.4%	3.6%	1.8%	Free	Free	Free	Free	Free	Free	Free
9011.80.00	4.8%	3.2%	1.6%	Free	Free	Free	Free	Free	Free	Free
9011.90.00	4.2%	2.8%	1.4%	Free	Free	Free	Free	Free	Free	Free
9012.10.00	1.7%	Free	Free	Free	Free	Free	Free	Free	Free	Free
9012.90.00	2.4%	Free	Free	Free	Free	Free	Free	Free	Free	Free
9013.10.10	11.9%	8.9%	5.9%	2.9%	Free	Free	Free	Free	Free	Free
9013.10.30	0.7%	Free	Free	Free	Free	Free	Free	Free	Free	Free
9013.10.40	3.9%	2.6%	1.3%	Free	Free	Free	Free	Free	Free	Free
9013.20.00	1.5%	Free	Free	Free	Free	Free	Free	Free	Free	Free

Annex II (continued)
-192-

HTS Subheading	December 17, 2001	2002	2003	2004	2005	2006	2007	2008	2009	2010
9013.80.20	4.9%	3.3%	1.6%	Free	Free	Free	Free	Free	Free	Free
9013.80.40	4.3%	2.9%	1.4%	Free	Free	Free	Free	Free	Free	Free
9013.80.90	2.2%	Free	Free	Free	Free	Free	Free	Free	Free	Free
9013.90.20	12.8%	9.6%	6.4%	3.2%	Free	Free	Free	Free	Free	Free
9013.90.90	2.2%	Free	Free	Free	Free	Free	Free	Free	Free	Free
9014.10.10	2%	Free	Free	Free	Free	Free	Free	Free	Free	Free
9014.10.90	1.4%	Free	Free	Free	Free	Free	Free	Free	Free	Free
9014.20.20	1.4%	Free	Free	Free	Free	Free	Free	Free	Free	Free
9014.20.40	1.6%	Free	Free	Free	Free	Free	Free	Free	Free	Free
9014.80.10	1.4%	Free	Free	Free	Free	Free	Free	Free	Free	Free
9014.80.20	1.6%	Free	Free	Free	Free	Free	Free	Free	Free	Free
9015.10.80	1.4%	Free	Free	Free	Free	Free	Free	Free	Free	Free
9015.20.80	1.4%	Free	Free	Free	Free	Free	Free	Free	Free	Free
9015.30.80	1.4%	Free	Free	Free	Free	Free	Free	Free	Free	Free
9015.40.80	1.5%	Free	Free	Free	Free	Free	Free	Free	Free	Free
9015.80.20	1.4%	Free	Free	Free	Free	Free	Free	Free	Free	Free
9015.90.00	The rate applicable to the article of which it is a part or accessory	Free	Free	Free	Free	Free	Free	Free	Free	Free
9016.00.20	1.9%	Free	Free	Free	Free	Free	Free	Free	Free	Free
9016.00.40	1.4%	Free	Free	Free	Free	Free	Free	Free	Free	Free
9016.00.60	1.6%	Free	Free	Free	Free	Free	Free	Free	Free	Free
9017.10.80	1.9%	Free	Free	Free	Free	Free	Free	Free	Free	Free
9017.20.40	1.9%	Free	Free	Free	Free	Free	Free	Free	Free	Free
9017.20.80	2.3%	Free	Free	Free	Free	Free	Free	Free	Free	Free
9017.30.40	4.3%	2.9%	1.4%	Free	Free	Free	Free	Free	Free	Free
9017.30.80	1.9%	Free	Free	Free	Free	Free	Free	Free	Free	Free
9017.80.00	3.9%	2.6%	1.3%	Free	Free	Free	Free	Free	Free	Free

Annex II (continued)
-193-

HTS Subheading	December 17, 2001	2002	2003	2004	2005	2006	2007	2008	2009	2010
9017.90.00	The rate applicable to the article of which it is a part or accessory	Free	Free	Free	Free	Free	Free	Free	Free	Free
9020.00.60	1.2%	Free	Free	Free	Free	Free	Free	Free	Free	Free
9022.29.40	0.5%	Free	Free	Free	Free	Free	Free	Free	Free	Free
9022.29.80	0.7%	Free	Free	Free	Free	Free	Free	Free	Free	Free
9022.30.00	0.4%	Free	Free	Free	Free	Free	Free	Free	Free	Free
9022.90.05	0.4%	Free	Free	Free	Free	Free	Free	Free	Free	Free
9022.90.15	0.7%	Free	Free	Free	Free	Free	Free	Free	Free	Free
9022.90.25	0.4%	Free	Free	Free	Free	Free	Free	Free	Free	Free
9022.90.40	0.4%	Free	Free	Free	Free	Free	Free	Free	Free	Free
9022.90.60	0.4%	Free	Free	Free	Free	Free	Free	Free	Free	Free
9022.90.70	0.5%	Free	Free	Free	Free	Free	Free	Free	Free	Free
9022.90.95	0.7%	Free	Free	Free	Free	Free	Free	Free	Free	Free
9024.10.00	0.8%	Free	Free	Free	Free	Free	Free	Free	Free	Free
9024.80.00	0.8%	Free	Free	Free	Free	Free	Free	Free	Free	Free
9024.90.00	0.8%	Free	Free	Free	Free	Free	Free	Free	Free	Free
9025.19.40	0.7%	Free	Free	Free	Free	Free	Free	Free	Free	Free
9025.19.80	0.9%	Free	Free	Free	Free	Free	Free	Free	Free	Free
9025.80.10	0.8%	Free	Free	Free	Free	Free	Free	Free	Free	Free
9025.80.15	0.5%	Free	Free	Free	Free	Free	Free	Free	Free	Free
9025.80.20	1.4%	Free	Free	Free	Free	Free	Free	Free	Free	Free
9025.80.35	0.7%	Free	Free	Free	Free	Free	Free	Free	Free	Free
9025.80.40	0.5%	Free	Free	Free	Free	Free	Free	Free	Free	Free
9025.80.50	0.8%	Free	Free	Free	Free	Free	Free	Free	Free	Free
9025.90.00	The rate applicable to the article of which it is a part or accessory	Free	Free	Free	Free	Free	Free	Free	Free	Free

Annex II (continued)
-194-

HTS Subheading	December 17, 2001	2002	2003	2004	2005	2006	2007	2008	2009	2010
9027.10.20	0.8%	Free	Free	Free	Free	Free	Free	Free	Free	Free
9027.10.40	1.7%	Free	Free	Free	Free	Free	Free	Free	Free	Free
9027.10.60	1.1%	Free	Free	Free	Free	Free	Free	Free	Free	Free
9027.40.00	0.6%	Free	Free	Free	Free	Free	Free	Free	Free	Free
9027.90.20	1.1%	Free	Free	Free	Free	Free	Free	Free	Free	Free
9027.90.58	0.8%	Free	Free	Free	Free	Free	Free	Free	Free	Free
9027.90.68	1.7%	Free	Free	Free	Free	Free	Free	Free	Free	Free
9027.90.88	1.1%	Free	Free	Free	Free	Free	Free	Free	Free	Free
9028.10.00	8¢ each + 1.2%	Free	Free	Free	Free	Free	Free	Free	Free	Free
9028.20.00	8¢ each + 1.2%	Free	Free	Free	Free	Free	Free	Free	Free	Free
9028.30.00	8¢ each + 0.7%	Free	Free	Free	Free	Free	Free	Free	Free	Free
9028.90.00	1.6%	Free	Free	Free	Free	Free	Free	Free	Free	Free
9029.10.40	3.9%	2.6%	1.3%	Free	Free	Free	Free	Free	Free	Free
9029.20.20	4.5%	3%	1.5%	Free	Free	Free	Free	Free	Free	Free
9029.20.60	8¢ each + 1.2%	Free	Free	Free	Free	Free	Free	Free	Free	Free
9029.90.20	3.9%	2.6%	1.3%	Free	Free	Free	Free	Free	Free	Free
9029.90.40	4.5%	3%	1.5%	Free	Free	Free	Free	Free	Free	Free
9029.90.60	1.6%	Free	Free	Free	Free	Free	Free	Free	Free	Free
9030.10.00	0.8%	Free	Free	Free	Free	Free	Free	Free	Free	Free
9030.20.00	0.8%	Free	Free	Free	Free	Free	Free	Free	Free	Free
9030.31.00	0.8%	Free	Free	Free	Free	Free	Free	Free	Free	Free
9030.39.00	0.8%	Free	Free	Free	Free	Free	Free	Free	Free	Free
9030.83.00	0.8%	Free	Free	Free	Free	Free	Free	Free	Free	Free
9030.89.00	0.8%	Free	Free	Free	Free	Free	Free	Free	Free	Free
9030.90.25	0.8%	Free	Free	Free	Free	Free	Free	Free	Free	Free
9030.90.45	0.8%	Free	Free	Free	Free	Free	Free	Free	Free	Free
9030.90.68	0.8%	Free	Free	Free	Free	Free	Free	Free	Free	Free
9030.90.88	0.8%	Free	Free	Free	Free	Free	Free	Free	Free	Free

Annex II (continued)
-195-

HTS Subheading	December 17, 2001	2002	2003	2004	2005	2006	2007	2008	2009	2010
9031.10.00	0.8%	Free	Free	Free	Free	Free	Free	Free	Free	Free
9031.20.00	0.8%	Free	Free	Free	Free	Free	Free	Free	Free	Free
9031.30.00	1.2%	Free	Free	Free	Free	Free	Free	Free	Free	Free
9031.49.40	1.7%	Free	Free	Free	Free	Free	Free	Free	Free	Free
9031.49.90	1.7%	Free	Free	Free	Free	Free	Free	Free	Free	Free
9031.80.80	0.8%	Free	Free	Free	Free	Free	Free	Free	Free	Free
9031.90.20	1.2%	Free	Free	Free	Free	Free	Free	Free	Free	Free
9031.90.45	1.7%	Free	Free	Free	Free	Free	Free	Free	Free	Free
9031.90.58	1.7%	Free	Free	Free	Free	Free	Free	Free	Free	Free
9031.90.90	0.8%	Free	Free	Free	Free	Free	Free	Free	Free	Free
9032.10.00	0.8%	Free	Free	Free	Free	Free	Free	Free	Free	Free
9032.20.00	0.8%	Free	Free	Free	Free	Free	Free	Free	Free	Free
9032.81.00	0.8%	Free	Free	Free	Free	Free	Free	Free	Free	Free
9032.89.20	0.5%	Free	Free	Free	Free	Free	Free	Free	Free	Free
9032.89.40	0.8%	Free	Free	Free	Free	Free	Free	Free	Free	Free
9032.89.60	0.8%	Free	Free	Free	Free	Free	Free	Free	Free	Free
9032.90.20	0.5%	Free	Free	Free	Free	Free	Free	Free	Free	Free
9032.90.40	0.8%	Free	Free	Free	Free	Free	Free	Free	Free	Free
9032.90.60	0.8%	Free	Free	Free	Free	Free	Free	Free	Free	Free
9033.00.00	2.2%	Free	Free	Free	Free	Free	Free	Free	Free	Free
9101.11.40	38.2¢ each + 4.6% on the case and strap, band or bracelet + 3.9% on the battery	25.5¢ each + 3.1% on the case and strap, band or bracelet + 2.6% on the battery	12.7¢ each + 1.5% on the case and strap, band or bracelet + 1.3% on the battery	Free	Free	Free	Free	Free	Free	Free
9101.11.80	65.2¢ each + 4.6% on the case and strap, band or bracelet + 3.9% on the battery	43.5¢ each + 3.1% on the case and strap, band or bracelet + 2.6% on the battery	21.7¢ each + 1.5% on the case and strap, band or bracelet + 1.3% on the battery	Free	Free	Free	Free	Free	Free	Free

Annex II (continued)
-196-

HTS Subheading	December 17, 2001	2002	2003	2004	2005	2006	2007	2008	2009	2010
9101.19.40	32.8¢ each + 4% on the case and strap, band or bracelet + 3.3% on the battery	24.6¢ each + 3% on the case and strap, band or bracelet + 2.5% on the battery	16.4¢ each + 2% on the case and strap, band or bracelet + 1.6% on the battery	8.2¢ each + 1% on the case and strap, band or bracelet + 0.8% on the battery	Free	Free	Free	Free	Free	Free
9101.19.80	30.5¢ each + 2.2% on the case and strap, band or bracelet + 1.8% on the battery	Free	Free	Free	Free	Free	Free	Free	Free	Free
9101.21.10	1.5%	Free	Free	Free	Free	Free	Free	Free	Free	Free
9101.21.30	1.5%	Free	Free	Free	Free	Free	Free	Free	Free	Free
9101.21.80	80.5¢ each + 2.2% on the case and strap, band or bracelet	Free	Free	Free	Free	Free	Free	Free	Free	Free
9101.29.10	20¢ each + 2.5% on the case and strap, band or bracelet	Free	Free	Free	Free	Free	Free	Free	Free	Free
9101.29.20	30.5¢ each + 2.2% on the case and strap, band or bracelet	Free	Free	Free	Free	Free	Free	Free	Free	Free
9101.29.30	$1.14 each + 2.5% on the case and strap, band or bracelet	Free	Free	Free	Free	Free	Free	Free	Free	Free

Annex II (continued)
-197-

HTS Subheading	December 17, 2001	2002	2003	2004	2005	2006	2007	2008	2009	2010
9101.29.40	$1.536 each + 4% on the case and strap, band or bracelet	$1.152 each + 3% on the case and strap, band or bracelet	76.8¢ each + 2% on the case and strap, band or bracelet	38.4¢ each + 1% on the case and strap, band or bracelet	Free	Free	Free	Free	Free	Free
9101.29.50	45¢ each + 2.2% on the case and strap, band or bracelet	Free	Free	Free	Free	Free	Free	Free	Free	Free
9101.29.70	1.5%	Free	Free	Free	Free	Free	Free	Free	Free	Free
9101.29.80	1.5%	Free	Free	Free	Free	Free	Free	Free	Free	Free
9101.99.40	73.5¢ each + 2.2% on the case	49¢ each + 1.5% on the case	24.5¢ each + 0.7% on the case	Free	Free	Free	Free	Free	Free	Free
9102.11.10	33¢ each + 4.5% on the case + 10.5% on the strap, band or bracelet + 3.9% on the battery	22¢ each + 3% on the case + 7% on the strap, band or bracelet + 2.6% on the battery	11¢ each + 1.5% on the case + 3.5% on the strap, band or bracelet + 1.3% on the battery	Free	Free	Free	Free	Free	Free	Free
9102.11.25	30¢ each + 6.3% on the case + 10.5% on the strap, band or bracelet + 3.9% on the battery	20¢ each + 4.2% on the case + 7% on the strap, band or bracelet + 2.6% on the battery	10¢ each + 2.1% on the case + 3.5% on the strap, band or bracelet + 1.3% on the battery	Free	Free	Free	Free	Free	Free	Free
9102.11.30	33¢ each + 4.5% on the case + 2.1% on the strap, band or bracelet + 3.9% on the battery	22¢ each + 3% on the case + 1.4% on the strap, band or bracelet + 2.6% on the battery	11¢ each + 1.5% on the case + 0.7% on the strap, band or bracelet + 1.3% on the battery	Free	Free	Free	Free	Free	Free	Free

Annex II (continued)
-198-

HTS Subheading	December 17, 2001	2002	2003	2004	2005	2006	2007	2008	2009	2010
9102.11.45	30¢ each + 6.3% on the case + 2.1% on the strap, band or bracelet + 3.9% on the battery	20¢ each + 4.2% on the case + 1.4% on the strap, band or bracelet + 2.6% on the battery	10¢ each + 2.1% on the case + 0.7% on the strap, band or bracelet + 1.3% on the battery	Free	Free	Free	Free	Free	Free	Free
9102.11.50	60¢ each + 4.5% on the case + 10.5% on the strap, band or bracelet + 3.9% on the battery	40¢ each + 3% on the case + 7% on the strap, band or bracelet + 2.6% on the battery	20¢ each + 1.5% on the case + 3.5% on the strap, band or bracelet + 1.3% on the battery	Free	Free	Free	Free	Free	Free	Free
9102.11.65	57¢ each + 6.3% on the case + 10.5% on the strap, band or bracelet + 3.9% on the battery	38¢ each + 4.2% on the case + 7% on the strap, band or bracelet + 2.6% on the battery	19¢ each + 2.1% on the case + 3.5% on the strap, band or bracelet + 1.3% on the battery	Free	Free	Free	Free	Free	Free	Free
9102.11.70	40¢ each + 3% on the case + 1.4% on the strap, band or bracelet + 2.6% on the battery	Free	Free	Free	Free	Free	Free	Free	Free	Free
9102.11.95	57¢ each + 6.3% on the case + 2.1% on the strap, band or bracelet + 3.9% on the battery	38¢ each + 4.2% on the case + 1.4% on the strap, band or bracelet + 2.6% on the battery	19¢ each + 2.1% on the case + 0.7% on the strap, band or bracelet + 1.3% on the battery	Free	Free	Free	Free	Free	Free	Free

Annex II (continued)
-199-

HTS Subheading	December 17, 2001	2002	2003	2004	2005	2006	2007	2008	2009	2010
9102.19.20	16¢ each + 2.4% on the case + 5.5% on the strap, band or bracelet + 2.1% on the battery	Free	Free	Free	Free	Free	Free	Free	Free	Free
9102.19.40	16¢ each + 2.4% on the case + 1.1% on the strap, band or bracelet + 2.1% on the battery	Free	Free	Free	Free	Free	Free	Free	Free	Free
9102.19.60	28.5¢ each + 2.2% on the case + 5.3% on the strap, band or bracelet + 2% on the battery	Free	Free	Free	Free	Free	Free	Free	Free	Free
9102.19.80	28.5¢ each + 2.2% on the case + 1% on the strap, band or bracelet + 2% on the battery	Free	Free	Free	Free	Free	Free	Free	Free	Free
9102.21.10	37.5¢ each + 3% on the case + 7% on the strap, band or bracelet	Free	Free	Free	Free	Free	Free	Free	Free	Free
9102.21.25	37.5¢ each + 3% on the case + 1.4% on the strap, band or bracelet	Free	Free	Free	Free	Free	Free	Free	Free	Free

Annex II (continued)
-200-

HTS Subheading	December 17, 2001	2002	2003	2004	2005	2006	2007	2008	2009	2010
9102.21.30	$1.312 each + 3.6% on the case + 8.4% on the strap, band or bracelet	87.5¢ each + 2.4% on the case + 5.6% on the strap, band or bracelet	43.7¢ each + 1.2% on the case + 2.8% on the strap, band or bracelet	Free	Free	Free	Free	Free	Free	Free
9102.21.50	87.5¢ + 2.4% on the case + 1.1% on the strap, band or bracelet	Free	Free	Free	Free	Free	Free	Free	Free	Free
9102.21.70	76.5¢ each + 2.1% on the case + 4.9% on the strap, band or bracelet	Free	Free	Free	Free	Free	Free	Free	Free	Free
9102.21.90	76.5¢ each + 2.1% on the case + 1% on the strap, band or bracelet	Free	Free	Free	Free	Free	Free	Free	Free	Free
9102.29.02	11.2%	8.4%	5.6%	2.8%	Free	Free	Free	Free	Free	Free
9102.29.04	20¢ each + 3% on the case	Free	Free	Free	Free	Free	Free	Free	Free	Free
9102.29.10	30¢ each + 4.5% on the case + 2.1% on the strap, band or bracelet	20¢ each + 3% on the case + 1.4% on the strap, band or bracelet	10¢ each + 1.5% on the case + 0.7% on the strap, band or bracelet	Free	Free	Free	Free	Free	Free	Free
9102.29.15	43.5¢ each + 3.4% on the case + 7.9% on the strap, band or bracelet	29¢ each + 2.3% on the case + 5.3% on the strap, band or bracelet	14.5¢ each + 1.1% on the case + 2.6% on the strap, band or bracelet	Free	Free	Free	Free	Free	Free	Free

Annex II (continued)
-201-

HTS Subheading	December 17, 2001	2002	2003	2004	2005	2006	2007	2008	2009	2010
9102.29.20	28¢ each + 2.2% on the case + 1% on the strap, band or bracelet	Free	Free	Free	Free	Free	Free	Free	Free	Free
9102.29.25	$1.752 each + 3.8% on the case + 8.9% on the strap, band or bracelet	$1.314 each + 2.8% on the case + 6.7% on the strap, band or bracelet	87.6¢ each + 1.9% on the case + 4.4% on the strap, band or bracelet	43.8¢ each + 0.9% on the case + 2.2% on the strap, band or bracelet	Free	Free	Free	Free	Free	Free
9102.29.30	$1.095 each + 2.4% on the case + 1.1% on the strap, band or bracelet	Free	Free	Free	Free	Free	Free	Free	Free	Free
9102.29.35	$1.207 each + 3.1% on the case + 7.3% on the strap, band or bracelet	80.5¢ each + 2.1% on the case + 4.9% on the strap, band or bracelet	40.2¢ each + 1% on the case + 2.4% on the strap, band or bracelet	Free	Free	Free	Free	Free	Free	Free
9102.29.40	$1.464 each + 3.8% on the case + 1.7% on the strap, band or bracelet	$1.098 each + 2.8% on the case + 1.3% on the strap, band or bracelet	73.2¢ each + 1.9% on the case + 0.8% on the strap, band or bracelet	36.6¢ each + 0.9% on the case + 0.4% on the strap, band or bracelet	Free	Free	Free	Free	Free	Free
9102.29.45	46.5¢ each + 2.4% on the case + 5.6% on the strap, band or bracelet	Free	Free	Free	Free	Free	Free	Free	Free	Free
9102.29.50	46.5¢ each + 2.4% on the case + 1.1% on the strap, band or bracelet	Free	Free	Free	Free	Free	Free	Free	Free	Free

Annex II (continued)
-202-

HTS Subheading	December 17, 2001	2002	2003	2004	2005	2006	2007	2008	2009	2010
9102.29.55	77.5¢ each + 2.1% on the case + 4.9% on the strap, band or bracelet	Free	Free	Free	Free	Free	Free	Free	Free	Free
9102.29.60	87.5¢ each + 2.4% on the case + 1.1% on the strap, band or bracelet	Free	Free	Free	Free	Free	Free	Free	Free	Free
9102.91.20	1.9% on the movement and case + 2.6% on the battery	Free	Free	Free	Free	Free	Free	Free	Free	Free
9102.91.40	32¢ each + 4.8% on the case + 4.2% on the battery	24¢ each + 3.6% on the case + 3.1% on the battery	16¢ each + 2.4% on the case + 2.1% on the battery	8¢ each + 1.2% on the case + 1% on the battery	Free	Free	Free	Free	Free	Free
9102.91.80	57¢ each + 4.5% on the case + 3.9% on the battery	38¢ each + 3% on the case + 2.6% on the battery	19¢ each + 1.5% on the case + 1.3% on the battery	Free	Free	Free	Free	Free	Free	Free
9102.99.20	10¢ each + 1.5% on the case	Free	Free	Free	Free	Free	Free	Free	Free	Free
9102.99.40	69¢ each + 2.2% on the case	46¢ each + 1.5% on the case	23¢ each + 0.7% on the case	Free	Free	Free	Free	Free	Free	Free
9102.99.60	58¢ each + 3% on the case	Free	Free	Free	Free	Free	Free	Free	Free	Free
9102.99.80	$1.095 each + 3% on the case	Free	Free	Free	Free	Free	Free	Free	Free	Free
9103.10.20	1.3% on the movement and case + 1.8% on the battery	Free	Free	Free	Free	Free	Free	Free	Free	Free

Annex II (continued)
-203-

HTS Subheading	December 17, 2001	2002	2003	2004	2005	2006	2007	2008	2009	2010
9103.10.40	18¢ each + 3.3% on the case + 2.6% on the battery	12¢ each + 2.2% on the case + 1.7% on the battery	6¢ each + 1.1% on the case + 0.8% on the battery	Free	Free	Free	Free	Free	Free	Free
9103.10.80	36¢ each + 3.4% on the case + 2.6% on the battery	24¢ each + 2.3% on the case + 1.7% on the battery	12¢ each + 1.1% on the case + 0.8% on the battery	Free	Free	Free	Free	Free	Free	Free
9103.90.00	18¢ each + 3.4% on the case	12¢ each + 2.3% on the case	6¢ each + 1.1% on the case	Free	Free	Free	Free	Free	Free	Free
9104.00.05	1.3% on the movement and case + 1.7% on the battery	Free	Free	Free	Free	Free	Free	Free	Free	Free
9104.00.10	16¢ each + 3.4% on the movement and case + 2.8% on the battery	12¢ each + 2.5% on the movement and case + 2.1% on the battery	8¢ each + 1.7% on the movement and case + 1.4% on the battery	4¢ each + 0.8% on the movement and case + 0.7% on the battery	Free	Free	Free	Free	Free	Free
9104.00.20	24¢ each + 5.1%	18¢ each + 3.8%	12¢ each + 2.5%	6¢ each + 1.2%	Free	Free	Free	Free	Free	Free
9104.00.25	1.9% on the movement and case + 2.6% on the battery	Free	Free	Free	Free	Free	Free	Free	Free	Free
9104.00.30	15¢ each + 2.1% on the movement and case + 1.7% on the battery	Free	Free	Free	Free	Free	Free	Free	Free	Free
9104.00.40	15¢ each + 2.1%	Free	Free	Free	Free	Free	Free	Free	Free	Free
9104.00.45	1.3% on the movement and case + 1.7% on the battery	Free	Free	Free	Free	Free	Free	Free	Free	Free

Annex II (continued)
-204-

HTS Subheading	December 17, 2001	2002	2003	2004	2005	2006	2007	2008	2009	2010
9104.00.50	10¢ each + 2.3% on the case + 1.7% on the battery	Free	Free	Free	Free	Free	Free	Free	Free	Free
9104.00.60	9.5¢ each + 2.2% on the case	Free	Free	Free	Free	Free	Free	Free	Free	Free
9105.11.40	1.9% on the movement and case + 2.6% on the battery	Free	Free	Free	Free	Free	Free	Free	Free	Free
9105.11.80	24¢ each + 5.5% on the case + 4.2% on the battery	18¢ each + 4.1% on the case + 3.1% on the battery	12¢ each + 2.7% on the case + 2.1% on the battery	6¢ each + 1.3% on the case + 1% on the battery	Free	Free	Free	Free	Free	Free
9105.19.10	24¢ each + 5.5% on the case	18¢ each + 4.1% on the case	12¢ each + 2.7% on the case	6¢ each + 1.3% on the case	Free	Free	Free	Free	Free	Free
9105.19.20	30¢ each + 3.4% on the case	Free	Free	Free	Free	Free	Free	Free	Free	Free
9105.19.30	21.5¢ each + 1.4¢/jewel over 7 + 1.8% on the case	Free	Free	Free	Free	Free	Free	Free	Free	Free
9105.19.40	12¢ each + 5.1%	9¢ each + 3.8%	6¢ each + 2.5%	3¢ each + 1.2%	Free	Free	Free	Free	Free	Free
9105.19.50	11.5¢ each + 1.6%	Free	Free	Free	Free	Free	Free	Free	Free	Free
9105.21.40	1.9% on the movement and case + 2.6% on the battery	Free	Free	Free	Free	Free	Free	Free	Free	Free
9105.21.80	22.5¢ each + 5.1% on the case + 3.9% on the battery	15¢ each + 3.4% on the case + 2.6% on the battery	7.5¢ each + 1.7% on the case + 1.3% on the battery	Free	Free	Free	Free	Free	Free	Free

Annex II (continued)
-205-

HTS Subheading	December 17, 2001	2002	2003	2004	2005	2006	2007	2008	2009	2010
9105.29.10	10¢ each + 2.3% on the case	Free	Free	Free	Free	Free	Free	Free	Free	Free
9105.29.20	20¢ each + 2.3% on the case	Free	Free	Free	Free	Free	Free	Free	Free	Free
9105.29.30	28.5¢ each + 1.8¢/jewel over 7 + 4.9% on the case	Free	Free	Free	Free	Free	Free	Free	Free	Free
9105.29.40	12¢ each + 5.1%	9¢ each + 3.8%	6¢ each + 2.5%	3¢ each + 1.2%	Free	Free	Free	Free	Free	Free
9105.29.50	22.5¢ each + 3.2%	15¢ each + 2.1%	7.5¢ each + 1%	Free	Free	Free	Free	Free	Free	Free
9105.91.40	1.9% on the movement and case + 2.6% on the battery	Free	Free	Free	Free	Free	Free	Free	Free	Free
9105.91.80	22.5¢ each + 5.1% on the case + 3.9% on the battery	15¢ each + 3.4% on the case + 2.6% on the battery	7.5¢ each + 1.7% on the case + 1.3% on the battery	Free	Free	Free	Free	Free	Free	Free
9105.99.10	8.5¢ each + 1.2% + 0.5¢/jewel	Free	Free	Free	Free	Free	Free	Free	Free	Free
9105.99.50	5.6¢ each + 2.4%	3.7¢ each + 1.6%	1.8¢ each + 0.8%	Free	Free	Free	Free	Free	Free	Free
9105.99.60	11.5¢ each + 1.6%	Free	Free	Free	Free	Free	Free	Free	Free	Free
9106.10.00	27¢ each + 4.2% + 1.5¢/jewel	18¢ each + 2.8% + 1¢/jewel	9¢ each + 1.4% + 0.5¢/jewel	Free	Free	Free	Free	Free	Free	Free
9106.20.00	27¢ each + 4.2% + 1.5¢/jewel	18¢ each + 2.8% + 1¢/jewel	9¢ each + 1.4% + 0.5¢/jewel	Free	Free	Free	Free	Free	Free	Free

Annex II (continued)
-206-

HTS Subheading	December 17, 2001	2002	2003	2004	2005	2006	2007	2008	2009	2010
9106.90.40	27¢ each + 4.2% + 1.5¢/jewel	18¢ each + 2.8% + 1¢/jewel	9¢ each + 1.4% + 0.5¢/jewel	Free	Free	Free	Free	Free	Free	Free
9106.90.55	1.9% on the apparatus + 2.6% on the battery	Free	Free	Free	Free	Free	Free	Free	Free	Free
9106.90.65	12¢ each + 1.8% + 0.6¢/jewel	9¢ each + 1.3% + 0.4¢/jewel	6¢ each + 0.9% + 0.3¢/jewel	3¢ each + 0.4% + 0.1¢/jewel	Free	Free	Free	Free	Free	Free
9106.90.75	1.9%	Free	Free	Free	Free	Free	Free	Free	Free	Free
9106.90.85	11.2¢ each + 1.7% + 0.6¢/jewel	7.5¢ each + 1.1% + 0.4¢/jewel	3.7¢ each + 0.5% + 0.2¢/jewel	Free	Free	Free	Free	Free	Free	Free
9107.00.40	12¢ each + 3.2% + 2¢/jewel	9¢ each + 2.4% + 1.5¢/jewel	6¢ each + 1.6% + 1¢/jewel	3¢ each + 0.8% + 0.5¢/jewel	Free	Free	Free	Free	Free	Free
9107.00.80	33.7¢ each + 4.8% + 1.8¢/jewel	22.5¢ each + 3.2% + 1.2¢/jewel	11.2¢ each + 1.6% + 0.6¢/jewel	Free	Free	Free	Free	Free	Free	Free
9108.11.40	28.8¢ each + 4.2% on the battery	21.6¢ each + 3.1% on the battery	14.4¢ each + 2.1% on the battery	7.2¢ each + 1% on the battery	Free	Free	Free	Free	Free	Free
9108.11.80	36¢ each + 2.6% on the battery	Free	Free	Free	Free	Free	Free	Free	Free	Free
9108.12.00	1.5% on the movement + 2.1% on the battery	Free	Free	Free	Free	Free	Free	Free	Free	Free
9108.19.40	21¢ each + 3.1% on the battery	14¢ each + 2.1% on the battery	7¢ each + 1% on the battery	Free	Free	Free	Free	Free	Free	Free
9108.19.80	39.7¢ each + 2.9% on the battery	26.5¢ each + 1.9% on the battery	13.2¢ each + 0.9% on the battery	Free	Free	Free	Free	Free	Free	Free

Annex II (continued)
-207-

HTS Subheading	December 17, 2001	2002	2003	2004	2005	2006	2007	2008	2009	2010
9108.91.10	14.5¢ each	Free	Free	Free	Free	Free	Free	Free	Free	Free
9108.91.20	28.5¢ each	Free	Free	Free	Free	Free	Free	Free	Free	Free
9108.91.30	$1.728 each	$1.296 each	86.4¢ each	43.2¢ each	Free	Free	Free	Free	Free	Free
9108.91.40	$1.62 each	$1.44 each	$1.26 each	$1.08 each	90¢ each	72¢ each	54¢ each	36¢ each	18¢ each	Free
9108.91.50	45¢ each	Free	Free	Free	Free	Free	Free	Free	Free	Free
9108.91.60	$1.125 each	75¢ each	37.5¢ each	Free	Free	Free	Free	Free	Free	Free
9108.99.20	12.5¢ each	Free	Free	Free	Free	Free	Free	Free	Free	Free
9108.99.40	$1.296 each	$1.152 each	$1.008 each	86.4¢ each	72¢ each	57.6¢ each	43.2¢ each	28.8¢ each	14.4¢ each	Free
9108.99.80	86¢ each	Free	Free	Free	Free	Free	Free	Free	Free	Free
9109.11.10	1.9% on the movement + 2.6% on the battery	Free	Free	Free	Free	Free	Free	Free	Free	Free
9109.11.20	15¢ each + 2.6% on the battery	Free	Free	Free	Free	Free	Free	Free	Free	Free
9109.11.40	5.6¢ each + 2.4% on the movement + 1.9% on the battery	3.7¢ each + 1.6% on the movement + 1.3% on the battery	1.8¢ each + 0.8% on the movement + 0.6% on the battery	Free	Free	Free	Free	Free	Free	Free
9109.11.60	16.5¢ each + 2.4% on the movement + 1.9% on the battery	11¢ each + 1.6% on the movement + 1.3% on the battery	5.5¢ each + 0.8% on the movement + 0.6% on the battery	Free	Free	Free	Free	Free	Free	Free
9109.19.10	1.9% on the movement + 2.6% on the battery	Free	Free	Free	Free	Free	Free	Free	Free	Free
9109.19.20	10¢ each + 1.7% on the battery	Free	Free	Free	Free	Free	Free	Free	Free	Free

Annex II (continued)
-208-

HTS Subheading	December 17, 2001	2002	2003	2004	2005	2006	2007	2008	2009	2010
9109.19.40	9.6¢ each + 4% on the movement + 3.3% on the battery	7.2¢ each + 3% on the movement + 2.5% on the battery	4.8¢ each + 2% on the movement + 1.6% on the battery	2.4¢ each + 1% on the movement + 0.8% on the battery	Free	Free	Free	Free	Free	Free
9109.19.60	22.5¢ each + 3.2% on the movement + 2.6% on the battery	15¢ each + 2.1% on the movement + 1.7% on the battery	7.5¢ each + 1% on the movement + 0.8% on the battery	Free	Free	Free	Free	Free	Free	Free
9109.90.20	15¢ each	10¢ each	5¢ each	Free	Free	Free	Free	Free	Free	Free
9109.90.40	12¢ each + 5.1%	9¢ each + 3.8%	6¢ each + 2.5%	3¢ each + 1.2%	Free	Free	Free	Free	Free	Free
9109.90.60	15¢ each + 2.1%	Free	Free	Free	Free	Free	Free	Free	Free	Free
9110.11.00	The rate applicable to the complete, assembled movement	The rate applicable to the complete, assembled movement	The rate applicable to the complete, assembled movement	The rate applicable to the complete, assembled movement	The rate applicable to the complete, assembled movement	The rate applicable to the complete, assembled movement	The rate applicable to the complete, assembled movement	The rate applicable to the complete, assembled movement	The rate applicable to the complete, assembled movement	Free
9110.12.00	6.7%	4.5%	2.2%	Free	Free	Free	Free	Free	Free	Free
9110.19.00	6.7%	4.5%	2.2%	Free	Free	Free	Free	Free	Free	Free
9110.90.20	The rate applicable to the complete, assembled movement	The rate applicable to the complete, assembled movement	The rate applicable to the complete, assembled movement	Free	Free	Free	Free	Free	Free	Free

Annex II (continued)
-209-

HTS Subheading	December 17, 2001	2002	2003	2004	2005	2006	2007	2008	2009	2010
9110.90.40	2.1% + 0.8¢/jewel + 0.1¢ for each other piece or part, but if consisting in part of a plate or a set of plates the total duty shall not exceed the duty for the complete movement	Free	Free	Free	Free	Free	Free	Free	Free	Free
9110.90.60	2.1%	Free	Free	Free	Free	Free	Free	Free	Free	Free
9111.10.00	6¢ each + 2.4%	Free	Free	Free	Free	Free	Free	Free	Free	Free
9111.20.20	5.2¢ each + 4%	3.5¢ each + 2.7%	1.7¢ each + 1.3%	Free	Free	Free	Free	Free	Free	Free
9111.20.40	2.7¢ each + 5.7%	1.8¢ each + 3.8%	0.9¢ each + 1.9%	Free	Free	Free	Free	Free	Free	Free
9111.80.00	2.8¢ each + 6%	2.1¢ each + 4.5%	1.4¢ each + 3%	0.7¢ each + 1.5%	Free	Free	Free	Free	Free	Free
9111.90.40	4.8%	3.2%	1.6%	Free	Free	Free	Free	Free	Free	Free
9111.90.50	1.2¢ each + 5.1%	0.8¢ each + 3.4%	0.4¢ each + 1.7%	Free	Free	Free	Free	Free	Free	Free
9111.90.70	4.8%	3.2%	1.6%	Free	Free	Free	Free	Free	Free	Free
9112.10.00	1.7%	Free	Free	Free	Free	Free	Free	Free	Free	Free
9112.80.00	4.1%	2.7%	1.3%	Free	Free	Free	Free	Free	Free	Free
9112.90.00	4.1%	2.7%	1.3%	Free	Free	Free	Free	Free	Free	Free
9113.10.00	2.2%	Free	Free	Free	Free	Free	Free	Free	Free	Free
9113.20.20	8.9%	6.7%	4.4%	2.2%	Free	Free	Free	Free	Free	Free
9113.20.40	8.9%	6.7%	4.4%	2.2%	Free	Free	Free	Free	Free	Free
9113.20.60	6.6%	4.4%	2.2%	Free	Free	Free	Free	Free	Free	Free
9113.20.90	6.6%	4.4%	2.2%	Free	Free	Free	Free	Free	Free	Free

Annex II (continued)
-210-

HTS Subheading	December 17, 2001	2002	2003	2004	2005	2006	2007	2008	2009	2010
9113.90.40	5.4%	3.6%	1.8%	Free	Free	Free	Free	Free	Free	Free
9113.90.80	0.9%	Free	Free	Free	Free	Free	Free	Free	Free	Free
9114.10.40	5.4%	3.6%	1.8%	Free	Free	Free	Free	Free	Free	Free
9114.10.80	2.1%	Free	Free	Free	Free	Free	Free	Free	Free	Free
9114.30.40	0.3¢ each + 5.4%	0.2¢ each + 3.6%	0.1¢ each + 1.8%	Free	Free	Free	Free	Free	Free	Free
9114.30.80	2.2%	Free	Free	Free	Free	Free	Free	Free	Free	Free
9114.40.20	6¢ each	Free	Free	Free	Free	Free	Free	Free	Free	Free
9114.40.40	7.5¢ each	5¢ each	2.5¢ each	Free	Free	Free	Free	Free	Free	Free
9114.40.60	5.4%	3.6%	1.8%	Free	Free	Free	Free	Free	Free	Free
9114.40.80	2.1%	Free	Free	Free	Free	Free	Free	Free	Free	Free
9114.90.15	5.4%	3.6%	1.8%	Free	Free	Free	Free	Free	Free	Free
9114.90.30	4.5% + 1.7¢/jewel + 0.1¢ for each other piece or part, but if consisting in part of a plate or a set of plates the total duty shall not exceed the duty for the complete movement	3% + 1.1¢/jewel + 0.1¢ for each other piece or part, but if consisting in part of a plate or a set of plates the total duty shall not exceed the duty for the complete movement	1.5% + 0.5¢/jewel, but if consisting in part of a plate or a set of plates the total duty shall not exceed the duty for the complete movement	Free	Free	Free	Free	Free	Free	Free
9114.90.40	6.6%	4.4%	2.2%	Free	Free	Free	Free	Free	Free	Free
9114.90.50	2.1%	Free	Free	Free	Free	Free	Free	Free	Free	Free
9201.10.00	2.3%	Free	Free	Free	Free	Free	Free	Free	Free	Free
9201.20.00	2.3%	Free	Free	Free	Free	Free	Free	Free	Free	Free
9201.90.00	1.7%	Free	Free	Free	Free	Free	Free	Free	Free	Free
9202.10.00	1.6%	Free	Free	Free	Free	Free	Free	Free	Free	Free
9202.90.20	2.2%	Free	Free	Free	Free	Free	Free	Free	Free	Free
9202.90.40	6.5%	4.3%	2.1%	Free	Free	Free	Free	Free	Free	Free

Annex II (continued)
-211-

HTS Subheading	December 17, 2001	2002	2003	2004	2005	2006	2007	2008	2009	2010
9202.90.60	2.3%	Free	Free	Free	Free	Free	Free	Free	Free	Free
9203.00.80	1.3%	Free	Free	Free	Free	Free	Free	Free	Free	Free
9204.10.80	1.3%	Free	Free	Free	Free	Free	Free	Free	Free	Free
9205.10.00	1.4%	Free	Free	Free	Free	Free	Free	Free	Free	Free
9205.90.40	2.4%	Free	Free	Free	Free	Free	Free	Free	Free	Free
9206.00.20	2.4%	Free	Free	Free	Free	Free	Free	Free	Free	Free
9206.00.80	3.9%	2.6%	1.3%	Free	Free	Free	Free	Free	Free	Free
9207.10.00	4%	2.7%	1.3%	Free	Free	Free	Free	Free	Free	Free
9207.90.00	2.5%	Free	Free	Free	Free	Free	Free	Free	Free	Free
9208.10.00	1.6%	Free	Free	Free	Free	Free	Free	Free	Free	Free
9208.90.00	3.9%	2.6%	1.3%	Free	Free	Free	Free	Free	Free	Free
9209.91.80	2.1%	Free	Free	Free	Free	Free	Free	Free	Free	Free
9209.92.20	1.9%	Free	Free	Free	Free	Free	Free	Free	Free	Free
9209.92.40	5¢/1000 pins + 1.7%	Free	Free	Free	Free	Free	Free	Free	Free	Free
9209.92.80	2.3%	Free	Free	Free	Free	Free	Free	Free	Free	Free
9209.93.80	1.3%	Free	Free	Free	Free	Free	Free	Free	Free	Free
9209.94.40	4.2%	2.8%	1.4%	Free	Free	Free	Free	Free	Free	Free
9209.94.80	1.3%	Free	Free	Free	Free	Free	Free	Free	Free	Free
9209.99.10	4.2%	2.8%	1.4%	Free	Free	Free	Free	Free	Free	Free
9209.99.80	3.9%	2.6%	1.3%	Free	Free	Free	Free	Free	Free	Free
9301.00.30	3.7% on the value of the rifle + 16% on the value of the telescopic sight, if any	2.8% on the value of the rifle + 12% on the value of the telescopic sight, if any	1.8% on the value of the rifle + 8% on the value of the telescopic sight, if any	0.9% on the value of the rifle + 4% on the value of the telescopic sight, if any	Free	Free	Free	Free	Free	Free
9301.00.60	1.3%	Free	Free	Free	Free	Free	Free	Free	Free	Free
9302.00.00	7¢ each + 1.5%	Free	Free	Free	Free	Free	Free	Free	Free	Free
9303.20.00	1.3%	Free	Free	Free	Free	Free	Free	Free	Free	Free

Annex II (continued)
-212-

HTS Subheading	December 17, 2001	2002	2003	2004	2005	2006	2007	2008	2009	2010
9303.30.40	1.9% on the value of the rifle + 5% on the value of the telescopic sight, if any	Free	Free	Free	Free	Free	Free	Free	Free	Free
9303.30.80	1.5% on the value of the rifle + 6.5% on the value of the telescopic sight, if any	Free	Free	Free	Free	Free	Free	Free	Free	Free
9303.90.40	2.1%	Free	Free	Free	Free	Free	Free	Free	Free	Free
9304.00.20	1.9%	Free	Free	Free	Free	Free	Free	Free	Free	Free
9304.00.60	4.2%	2.8%	1.4%	Free	Free	Free	Free	Free	Free	Free
9305.10.20	2.1%	Free	Free	Free	Free	Free	Free	Free	Free	Free
9305.10.40	2.1%	Free	Free	Free	Free	Free	Free	Free	Free	Free
9305.29.40	1.7%	Free	Free	Free	Free	Free	Free	Free	Free	Free
9305.90.50	1.9%	Free	Free	Free	Free	Free	Free	Free	Free	Free
9305.90.60	1.4%	Free	Free	Free	Free	Free	Free	Free	Free	Free
9307.00.00	1.3%	Free	Free	Free	Free	Free	Free	Free	Free	Free
9404.21.00	1.5%	Free	Free	Free	Free	Free	Free	Free	Free	Free
9404.29.10	1.5%	Free	Free	Free	Free	Free	Free	Free	Free	Free
9404.29.90	3%	Free	Free	Free	Free	Free	Free	Free	Free	Free
9404.30.40	2.3%	Free	Free	Free	Free	Free	Free	Free	Free	Free
9404.30.80	4.5%	Free	Free	Free	Free	Free	Free	Free	Free	Free
9404.90.10	2.8%	Free	Free	Free	Free	Free	Free	Free	Free	Free
9404.90.20	3%	Free	Free	Free	Free	Free	Free	Free	Free	Free
9404.90.80	2.3%	Free	Free	Free	Free	Free	Free	Free	Free	Free
9404.90.85	10.1%	6.7%	3.3%	Free	Free	Free	Free	Free	Free	Free
9404.90.95	8.1%	6.1%	4%	2%	Free	Free	Free	Free	Free	Free
9405.10.40	1.9%	Free	Free	Free	Free	Free	Free	Free	Free	Free
9405.10.60	5.7%	3.8%	1.9%	Free	Free	Free	Free	Free	Free	Free
9405.10.80	1.9%	Free	Free	Free	Free	Free	Free	Free	Free	Free

Annex II (continued)
-213-

HTS Subheading	December 17, 2001	2002	2003	2004	2005	2006	2007	2008	2009	2010
9405.20.40	1.8%	Free	Free	Free	Free	Free	Free	Free	Free	Free
9405.20.60	4.5%	3%	1.5%	Free	Free	Free	Free	Free	Free	Free
9405.20.80	1.9%	Free	Free	Free	Free	Free	Free	Free	Free	Free
9405.30.00	6%	4%	2%	Free	Free	Free	Free	Free	Free	Free
9405.40.40	2.3%	Free	Free	Free	Free	Free	Free	Free	Free	Free
9405.40.60	4.5%	3%	1.5%	Free	Free	Free	Free	Free	Free	Free
9405.40.80	1.9%	Free	Free	Free	Free	Free	Free	Free	Free	Free
9405.50.20	1.4%	Free	Free	Free	Free	Free	Free	Free	Free	Free
9405.50.30	4.2%	2.8%	1.4%	Free	Free	Free	Free	Free	Free	Free
9405.50.40	4.5%	3%	1.5%	Free	Free	Free	Free	Free	Free	Free
9405.60.20	4.2%	2.8%	1.4%	Free	Free	Free	Free	Free	Free	Free
9405.60.40	4.5%	3%	1.5%	Free	Free	Free	Free	Free	Free	Free
9405.60.60	3.9%	2.6%	1.3%	Free	Free	Free	Free	Free	Free	Free
9405.91.10	9.6%	7.2%	4.8%	2.4%	Free	Free	Free	Free	Free	Free
9405.91.30	9.6%	7.2%	4.8%	2.4%	Free	Free	Free	Free	Free	Free
9405.91.40	5.6%	3.7%	1.8%	Free	Free	Free	Free	Free	Free	Free
9405.91.60	2.2%	Free	Free	Free	Free	Free	Free	Free	Free	Free
9405.92.00	1.8%	Free	Free	Free	Free	Free	Free	Free	Free	Free
9405.99.20	1.9%	Free	Free	Free	Free	Free	Free	Free	Free	Free
9405.99.40	4.5%	3%	1.5%	Free	Free	Free	Free	Free	Free	Free
9406.00.40	1.3%	Free	Free	Free	Free	Free	Free	Free	Free	Free
9406.00.80	1.4%	Free	Free	Free	Free	Free	Free	Free	Free	Free
9506.11.40	1.3%	Free	Free	Free	Free	Free	Free	Free	Free	Free
9506.12.80	1.4%	Free	Free	Free	Free	Free	Free	Free	Free	Free
9506.19.80	1.4%	Free	Free	Free	Free	Free	Free	Free	Free	Free
9506.31.00	2.2%	Free	Free	Free	Free	Free	Free	Free	Free	Free
9506.39.00	2.4%	Free	Free	Free	Free	Free	Free	Free	Free	Free
9506.40.00	3.8%	2.5%	1.2%	Free	Free	Free	Free	Free	Free	Free
9506.51.20	3.9%	2.6%	1.3%	Free	Free	Free	Free	Free	Free	Free
9506.51.40	1.9%	Free	Free	Free	Free	Free	Free	Free	Free	Free
9506.51.60	1.5%	Free	Free	Free	Free	Free	Free	Free	Free	Free

Annex II (continued)
-214-

HTS Subheading	December 17, 2001	2002	2003	2004	2005	2006	2007	2008	2009	2010
9506.59.40	4.2%	2.8%	1.4%	Free	Free	Free	Free	Free	Free	Free
9506.59.80	2%	Free	Free	Free	Free	Free	Free	Free	Free	Free
9506.62.80	2.4%	Free	Free	Free	Free	Free	Free	Free	Free	Free
9506.69.40	4%	2.7%	1.3%	Free	Free	Free	Free	Free	Free	Free
9506.69.60	2.4%	Free	Free	Free	Free	Free	Free	Free	Free	Free
9506.70.40	1.4%	Free	Free	Free	Free	Free	Free	Free	Free	Free
9506.91.00	2.3%	Free	Free	Free	Free	Free	Free	Free	Free	Free
9506.99.08	1.4%	Free	Free	Free	Free	Free	Free	Free	Free	Free
9506.99.12	4.2%	2.8%	1.4%	Free	Free	Free	Free	Free	Free	Free
9506.99.30	1.5%	Free	Free	Free	Free	Free	Free	Free	Free	Free
9506.99.45	1.4%	Free	Free	Free	Free	Free	Free	Free	Free	Free
9506.99.50	1.3%	Free	Free	Free	Free	Free	Free	Free	Free	Free
9506.99.55	3.9%	2.6%	1.3%	Free	Free	Free	Free	Free	Free	Free
9506.99.60	2%	Free	Free	Free	Free	Free	Free	Free	Free	Free
9507.10.00	4.5%	3%	1.5%	Free	Free	Free	Free	Free	Free	Free
9507.20.40	2%	Free	Free	Free	Free	Free	Free	Free	Free	Free
9507.20.80	2.4%	Free	Free	Free	Free	Free	Free	Free	Free	Free
9507.30.20	6.9%	4.6%	2.3%	Free	Free	Free	Free	Free	Free	Free
9507.30.40	12¢ each	Free	Free	Free	Free	Free	Free	Free	Free	Free
9507.30.60	1.9%	Free	Free	Free	Free	Free	Free	Free	Free	Free
9507.30.80	4%	2.7%	1.3%	Free	Free	Free	Free	Free	Free	Free
9507.90.20	1.8%	Free	Free	Free	Free	Free	Free	Free	Free	Free
9507.90.40	4.2%	2.8%	1.4%	Free	Free	Free	Free	Free	Free	Free
9507.90.60	2.5%	Free	Free	Free	Free	Free	Free	Free	Free	Free
9507.90.70	6.7%	4.5%	2.2%	Free	Free	Free	Free	Free	Free	Free
9507.90.80	6.7%	4.5%	2.2%	Free	Free	Free	Free	Free	Free	Free
9601.90.40	1%	Free	Free	Free	Free	Free	Free	Free	Free	Free
9601.90.80	1.8%	Free	Free	Free	Free	Free	Free	Free	Free	Free
9602.00.10	1.5%	Free	Free	Free	Free	Free	Free	Free	Free	Free
9602.00.40	0.9%	Free	Free	Free	Free	Free	Free	Free	Free	Free
9602.00.50	1.3%	Free	Free	Free	Free	Free	Free	Free	Free	Free

Annex II (continued)
-215-

HTS Subheading	December 17, 2001	2002	2003	2004	2005	2006	2007	2008	2009	2010
9603.10.05	6%	4%	2%	Free	Free	Free	Free	Free	Free	Free
9603.10.15	3.7¢ each	2.5¢ each	1.2¢ each	Free	Free	Free	Free	Free	Free	Free
9603.10.35	11.2%	8.4%	5.6%	2.8%	Free	Free	Free	Free	Free	Free
9603.10.40	6%	4%	2%	Free	Free	Free	Free	Free	Free	Free
9603.10.50	28.8¢ each	25.6¢ each	22.4¢ each	19.2¢ each	16¢ each	12.8¢ each	9.6¢ each	6.4¢ each	3.2¢ each	Free
9603.10.60	28.8%	25.6%	22.4%	19.2%	16%	12.8%	9.6%	6.4%	3.2%	Free
9603.10.90	7.5%	5%	2.5%	Free	Free	Free	Free	Free	Free	Free
9603.29.40	0.1¢ each + 5.2%	0.1¢ each + 3.5%	1.7%	Free	Free	Free	Free	Free	Free	Free
9603.29.80	0.1¢ each + 1.8%	Free	Free	Free	Free	Free	Free	Free	Free	Free
9603.30.20	1.3%	Free	Free	Free	Free	Free	Free	Free	Free	Free
9603.40.20	5.6%	3.7%	1.8%	Free	Free	Free	Free	Free	Free	Free
9603.40.40	2%	Free	Free	Free	Free	Free	Free	Free	Free	Free
9603.90.80	1.4%	Free	Free	Free	Free	Free	Free	Free	Free	Free
9604.00.00	2.4%	Free	Free	Free	Free	Free	Free	Free	Free	Free
9605.00.00	6%	4%	2%	Free	Free	Free	Free	Free	Free	Free
9606.10.40	1.7%	Free	Free	Free	Free	Free	Free	Free	Free	Free
9606.10.80	1.3%	Free	Free	Free	Free	Free	Free	Free	Free	Free
9606.21.40	0.2¢/line/gross + 3.4%	0.1¢/line/gross + 2.3%	1.1%	Free	Free	Free	Free	Free	Free	Free
9606.21.60	2.3%	Free	Free	Free	Free	Free	Free	Free	Free	Free
9606.29.20	0.2¢/line/gross + 3.3%	0.1¢/line/gross + 2.2%	1.1%	Free	Free	Free	Free	Free	Free	Free
9606.29.40	0.1¢/line/ gross + 1.2%	Free	Free	Free	Free	Free	Free	Free	Free	Free
9606.29.60	1.4%	Free	Free	Free	Free	Free	Free	Free	Free	Free
9606.30.80	4.5%	3%	1.5%	Free	Free	Free	Free	Free	Free	Free
9607.11.00	7.5%	5%	2.5%	Free	Free	Free	Free	Free	Free	Free
9607.19.00	10.4%	7.8%	5.2%	2.6%	Free	Free	Free	Free	Free	Free
9607.20.00	9.2%	6.9%	4.6%	2.3%	Free	Free	Free	Free	Free	Free
9608.10.00	0.6¢ each + 4%	0.4¢ each + 2.7%	0.2¢ each +	Free	Free	Free	Free	Free	Free	Free

Annex II (continued)
-216-

HTS Subheading	December 17, 2001	2002	2003	2004	2005	2006	2007	2008	2009	2010
9608.20.00	2%	Free	Free	Free	Free	Free	Free	Free	Free	Free
9608.31.00	0.2¢ each + 1.3%	Free	Free	Free	Free	Free	Free	Free	Free	Free
9608.39.00	0.2¢ each + 1.3%	Free	Free	Free	Free	Free	Free	Free	Free	Free
9608.40.40	4.9%	3.3%	1.6%	Free	Free	Free	Free	Free	Free	Free
9608.50.00	The rate applicable to each article in the absence of this subheading	The rate applicable to each article in the absence of this subheading	The rate applicable to each article in the absence of this subheading	Free	Free	Free	Free	Free	Free	Free
9608.60.00	0.3¢ each + 2.1%	0.2¢ each + 1.6%	0.1¢ each + 1%	0.5%	Free	Free	Free	Free	Free	Free
9608.99.20	0.2¢ each + 1.3%	Free	Free	Free	Free	Free	Free	Free	Free	Free
9608.99.30	16¢/thousand + 2.8%	12¢/thousand + 2.1%	8¢/thousand + 1.4%	4¢/thousand + 0.7%	Free	Free	Free	Free	Free	Free
9609.10.00	10.5¢/gross + 3.2%	7¢/gross + 2.1%	3.5¢/gross + 1%	Free	Free	Free	Free	Free	Free	Free
9610.00.00	1.7%	Free	Free	Free	Free	Free	Free	Free	Free	Free
9611.00.00	1.3%	Free	Free	Free	Free	Free	Free	Free	Free	Free
9612.10.90	6.2%	4.1%	2%	Free	Free	Free	Free	Free	Free	Free
9612.20.00	1.7%	Free	Free	Free	Free	Free	Free	Free	Free	Free
9613.10.00	4%	Free	Free	Free	Free	Free	Free	Free	Free	Free
9613.20.00	4.5%	Free	Free	Free	Free	Free	Free	Free	Free	Free
9613.30.00	2.4%	Free	Free	Free	Free	Free	Free	Free	Free	Free
9613.80.20	1.9%	Free	Free	Free	Free	Free	Free	Free	Free	Free
9613.80.40	1.8%	Free	Free	Free	Free	Free	Free	Free	Free	Free
9613.80.60	6%	4%	2%	Free	Free	Free	Free	Free	Free	Free
9613.80.80	6.7%	4.5%	2.2%	Free	Free	Free	Free	Free	Free	Free
9613.90.40	1.9%	Free	Free	Free	Free	Free	Free	Free	Free	Free
9613.90.80	6%	4%	2%	Free	Free	Free	Free	Free	Free	Free
9614.20.15	0.2¢ each + 1.6%	Free	Free	Free	Free	Free	Free	Free	Free	Free

Annex II (continued)
-217-

HTS Subheading	December 17, 2001	2002	2003	2004	2005	2006	2007	2008	2009	2010
9614.20.60	1.5%	Free	Free	Free	Free	Free	Free	Free	Free	Free
9614.90.40	5.4%	3.6%	1.8%	Free	Free	Free	Free	Free	Free	Free
9614.90.80	0.2¢ each + 1.5%	Free	Free	Free	Free	Free	Free	Free	Free	Free
9615.11.10	10.8¢/gross + 1.5%	7.2¢/gross + 1%	3.6¢/gross + 0.5%	Free	Free	Free	Free	Free	Free	Free
9615.11.20	3.9%	2.6%	1.3%	Free	Free	Free	Free	Free	Free	Free
9615.11.30	21.6¢/gross + 3.4%	14.4¢/gross + 2.3%	7.2¢/gross + 1.1%	Free	Free	Free	Free	Free	Free	Free
9615.11.40	3.9%	2.6%	1.3%	Free	Free	Free	Free	Free	Free	Free
9615.19.20	4.8¢/gross + 0.6%	Free	Free	Free	Free	Free	Free	Free	Free	Free
9615.19.40	21.6¢/gross + 3.4%	14.4¢/gross + 2.3%	7.2¢/gross + 1.1%	Free	Free	Free	Free	Free	Free	Free
9615.19.60	8.8%	6.6%	4.4%	2.2%	Free	Free	Free	Free	Free	Free
9615.90.20	6%	4%	2%	Free	Free	Free	Free	Free	Free	Free
9615.90.30	3.8%	2.5%	1.2%	Free	Free	Free	Free	Free	Free	Free
9615.90.40	3.9%	2.6%	1.3%	Free	Free	Free	Free	Free	Free	Free
9615.90.60	8.8%	6.6%	4.4%	2.2%	Free	Free	Free	Free	Free	Free
9616.20.00	2.1%	Free	Free	Free	Free	Free	Free	Free	Free	Free
9617.00.10	5.4%	3.6%	1.8%	Free	Free	Free	Free	Free	Free	Free
9617.00.30	5.1%	3.4%	1.7%	Free	Free	Free	Free	Free	Free	Free
9617.00.40	5.1%	3.4%	1.7%	Free	Free	Free	Free	Free	Free	Free
9617.00.60	5.4%	3.6%	1.8%	Free	Free	Free	Free	Free	Free	Free
9618.00.00	2.2%	Free	Free	Free	Free	Free	Free	Free	Free	Free
9816.00.20	2.5% of the fair retail value	Free	Free	Free	Free	Free	Free	Free	Free	Free
9816.00.40	1.5% of the fair retail value	Free	Free	Free	Free	Free	Free	Free	Free	Free
9909.04.10	$1.481/kg	$1.316/kg	$1.152/kg	98.7¢/kg	82.3¢/kg	65.8¢/kg	49.3¢/kg	32.9¢/kg	16.4¢/kg	Free
9909.04.11	69.4¢/liter	61.7¢/liter	54¢/liter	46.3¢/liter	38.6¢/liter	30.8¢/liter	23.1¢/liter	15.4¢/liter	7.7¢/liter	Free
9909.04.12	$1.481/kg	$1.316/kg	$1.152/kg	98.7¢/kg	82.3¢/kg	65.8¢/kg	49.3¢/kg	32.9¢/kg	16.4¢/kg	Free
9909.04.13	77.8¢/kg	69.2¢/kg	60.5¢/kg	51.9¢/kg	43.2¢/kg	34.6¢/kg	25.9¢/kg	17.3¢/kg	8.6¢/kg	Free

Annex II (continued)
-218-

HTS Subheading	December 17, 2001	2002	2003	2004	2005	2006	2007	2008	2009	2010
9909.04.14	98.2¢/kg	87.3¢/kg	76.4¢/kg	65.5¢/kg	54.6¢/kg	43.6¢/kg	32.7¢/kg	21.8¢/kg	10.9¢/kg	Free
9909.04.15	$1.40/kg	$1.244/kg	$1.089/kg	93.3¢/kg	77.8¢/kg	62.2¢/kg	46.6¢/kg	31.1¢/kg	15.5¢/kg	Free
9909.04.16	99.3¢/kg + 13.4%	88.3¢/kg + 11.9%	77.2¢/kg + 10.4%	66.2¢/kg + 8.9%	55.2¢/kg + 7.4%	44.1¢/kg + 5.9%	33.1¢/kg + 4.4%	22¢/kg + 2.9%	11¢/kg + 1.4%	Free
9909.04.17	28.1¢/kg	25¢/kg	21.9¢/kg	18.7¢/kg	15.6¢/kg	12.5¢/kg	9.3¢/kg	6.2¢/kg	3.1¢/kg	Free
9909.04.18	44.6¢/kg	39.6¢/kg	34.7¢/kg	29.7¢/kg	24.8¢/kg	19.8¢/kg	14.8¢/kg	9.9¢/kg	4.9¢/kg	Free
9909.04.19	41.6¢/kg + 13.4%	37¢/kg + 11.9%	32.4¢/kg + 10.4%	27.7¢/kg + 8.9%	23.1¢/kg + 7.4%	18.5¢/kg + 5.9%	13.8¢/kg + 4.4%	9.2¢/kg + 2.9%	4.6¢/kg + 1.4%	Free
9909.04.20	93.1¢/kg + 15.3%	82.8¢/kg + 13.6%	72.4¢/kg + 11.9%	62.1¢/kg + 10.2%	51.7¢/kg + 8.5%	41.4¢/kg + 6.8%	31¢/kg + 5.1%	20.7¢/kg + 3.4%	10.3¢/kg + 1.7%	Free
9909.04.21	78.8¢/kg	70¢/kg	61.3¢/kg	52.5¢/kg	43.8¢/kg	35¢/kg	26.2¢/kg	17.5¢/kg	8.7¢/kg	Free
9909.04.22	93¢/kg + 15.3%	82.7¢/kg + 13.6%	72.3¢/kg + 11.9%	62¢/kg + 10.2%	51.7¢/kg + 8.5%	41.3¢/kg + 6.8%	31¢/kg + 5.1%	20.6¢/kg + 3.4%	10.3¢/kg + 1.7%	Free
9909.04.23	93.1¢/kg + 7.6%	82.8¢/kg + 6.8%	72.4¢/kg + 5.9%	62.1¢/kg + 5.1%	51.7¢/kg + 4.2%	41.4¢/kg + 3.4%	31¢/kg + 2.5%	20.7¢/kg + 1.7%	10.3¢/kg + 0.8%	Free
9909.04.24	$1.07/kg + 7.6%	95.1¢/kg + 6.8%	83.2¢/kg + 5.9%	71.3¢/kg + 5.1%	59.4¢/kg + 4.2%	47.5¢/kg + 3.4%	35.6¢/kg + 2.5%	23.7¢/kg + 1.7%	11.8¢/kg + 0.8%	Free
9909.04.25	$1.386/kg	$1.232/kg	$1.078/kg	92.4¢/kg	77¢/kg	61.6¢/kg	46.2¢/kg	30.8¢/kg	15.4¢/kg	Free
9909.04.26	$1.796/kg	$1.596/kg	$1.397/kg	$1.197/kg	99.8¢/kg	79.8¢/kg	59.8¢/kg	39.9¢/kg	19.9¢/kg	Free
9909.04.27	63.3¢/kg + 7.6%	56.3¢/kg + 6.8%	49.2¢/kg + 5.9%	42.2¢/kg + 5.1%	35.2¢/kg + 4.2%	28.1¢/kg + 3.4%	21.1¢/kg + 2.5%	14¢/kg + 1.7%	7¢/kg + 0.8%	Free
9909.04.28	$1.678/kg + 7.6%	$1.492/kg + 6.8%	$1.305/kg + 5.9%	$1.119/kg + 5.1%	93.2¢/kg + 4.2%	74.6¢/kg + 3.4%	55.9¢/kg + 2.5%	37.3¢/kg + 1.7%	18.6¢/kg + 0.8%	Free
9909.04.29	$1.358/kg	$1.207/kg	$1.056/kg	90.5¢/kg	75.4¢/kg	60.3¢/kg	45.2¢/kg	30.1¢/kg	15¢/kg	Free
9909.04.30	$2.042/kg	$1.815/kg	$1.588/kg	$1.361/kg	$1.134/kg	90.7¢/kg	68¢/kg	45.3¢/kg	22.6¢/kg	Free
9909.04.31	$1.104/kg	98.1¢/kg	85.8¢/kg	73.6¢/kg	61.3¢/kg	49¢/kg	36.8¢/kg	24.5¢/kg	12.2¢/kg	Free
9909.04.32	94.9¢/kg	84.4¢/kg	73.8¢/kg	63.3¢/kg	52.7¢/kg	42.2¢/kg	31.6¢/kg	21.1¢/kg	10.5¢/kg	Free
9909.04.33	$1.622/kg	$1.442/kg	$1.262/kg	$1.081/kg	90.1¢/kg	72.1¢/kg	54¢/kg	36¢/kg	18¢/kg	Free
9909.04.34	$1.931/kg	$1.716/kg	$1.502/kg	$1.287/kg	$1.073/kg	85.8¢/kg	64.3¢/kg	42.9¢/kg	21.4¢/kg	Free
9909.04.35	$1.247/kg	$1.108/kg	97¢/kg	83.1¢/kg	69.3¢/kg	55.4¢/kg	41.5¢/kg	27.7¢/kg	13.8¢/kg	Free
9909.04.36	$1.015/kg	90.2¢/kg	78.9¢/kg	67.6¢/kg	56.4¢/kg	45.1¢/kg	33.8¢/kg	22.5¢/kg	11.2¢/kg	Free
9909.04.37	$1.689/kg	$1.501/kg	$1.313/kg	$1.126/kg	93.8¢/kg	75¢/kg	56.3¢/kg	37.5¢/kg	18.7¢/kg	Free
9909.04.38	30.7¢/kg	27.3¢/kg	23.9¢/kg	20.5¢/kg	17.1¢/kg	13.6¢/kg	10.2¢/kg	6.8¢/kg	3.4¢/kg	Free

Annex II (continued)
-219-

HTS Subheading	December 17, 2001	2002	2003	2004	2005	2006	2007	2008	2009	2010
9909.04.39	19.5¢/kg	17.3¢/kg	15.1¢/kg	13¢/kg	10.8¢/kg	8.6¢/kg	6.5¢/kg	4.3¢/kg	2.1¢/kg	Free
9909.04.40	30.2¢/kg	26.8¢/kg	23.5¢/kg	20.1¢/kg	16.8¢/kg	13.4¢/kg	10¢/kg	6.7¢/kg	3.3¢/kg	Free
9909.04.41	33.4¢/kg + 3.8%	29.7¢/kg + 3.4%	26¢/kg + 3%	22.3¢/kg + 2.5%	18.6¢/kg + 2.1%	14.8¢/kg + 1.7%	11.1¢/kg + 1.2%	7.4¢/kg + 0.8%	3.7¢/kg + 0.4%	Free
9909.04.42	47.5¢/kg + 3.8%	42.2¢/kg + 3.4%	36.9¢/kg + 3%	31.6¢/kg + 2.5%	26.4¢/kg + 2.1%	21.1¢/kg + 1.7%	15.8¢/kg + 1.2%	10.5¢/kg + 0.8%	5.2¢/kg + 0.4%	Free
9909.04.43	33.4¢/kg + 7.6%	29.7¢/kg + 6.8%	26¢/kg + 5.9%	22.3¢/kg + 5.1%	18.6¢/kg + 4.2%	14.8¢/kg + 3.4%	11.1¢/kg + 2.5%	7.4¢/kg + 1.7%	3.7¢/kg + 0.8%	Free
9909.04.44	47.5¢/kg + 7.6%	42.2¢/kg + 6.8%	36.9¢/kg + 5.9%	31.6¢/kg + 5.1%	26.4¢/kg + 4.2%	21.1¢/kg + 3.4%	15.8¢/kg + 2.5%	10.5¢/kg + 1.7%	5.2¢/kg + 0.8%	Free
9909.04.45	33.4¢/kg + 5.4%	29.7¢/kg + 4.8%	26¢/kg + 4.2%	22.3¢/kg + 3.6%	18.6¢/kg + 3%	14.8¢/kg + 2.4%	11.1¢/kg + 1.8%	7.4¢/kg + 1.2%	3.7¢/kg + 0.6%	Free
9909.04.46	47.5¢/kg + 5.4%	42.2¢/kg + 4.8%	36.9¢/kg + 4.2%	31.6¢/kg + 3.6%	26.4¢/kg + 3%	21.1¢/kg + 2.4%	15.8¢/kg + 1.8%	10.5¢/kg + 1.2%	5.2¢/kg + 0.6%	Free
9909.04.47	93.1¢/kg + 13.4%	82.8¢/kg + 11.9%	72.4¢/kg + 10.4%	62.1¢/kg + 8.9%	51.7¢/kg + 7.4%	41.4¢/kg + 5.9%	31¢/kg + 4.4%	20.7¢/kg + 2.9%	10.3¢/kg + 1.4%	Free
9909.04.48	38¢/kg + 7.6%	33.8¢/kg + 6.8%	29.6¢/kg + 5.9%	25.3¢/kg + 5.1%	21.1¢/kg + 4.2%	16.9¢/kg + 3.4%	12.6¢/kg + 2.5%	8.4¢/kg + 1.7%	4.2¢/kg + 0.8%	Free
9909.04.49	93.1¢/kg + 12.4%	82.8¢/kg + 10.8%	72.4¢/kg + 9.5%	62.1¢/kg + 8.1%	51.7¢/kg + 6.8%	41.4¢/kg + 5.4%	31¢/kg + 4%	20.7¢/kg + 2.7%	10.3¢/kg + 1.3%	Free
9909.04.50	27.4¢/kg + 5.7%	24.4¢/kg + 5.1%	21.3¢/kg + 4.4%	18.3¢/kg + 3.8%	15.2¢/kg + 3.2%	12.2¢/kg + 2.5%	9.1¢/kg + 1.9%	6.1¢/kg + 1.2%	3¢/kg + 0.6%	Free
9909.04.51	45.1¢/kg + 15.3%	40.1¢/kg + 13.6%	35.1¢/kg + 11.9%	30.1¢/kg + 10.2%	25.1¢/kg + 8.5%	20¢/kg + 6.8%	15¢/kg + 5.1%	10¢/kg + 3.4%	5¢/kg + 1.7%	Free
9909.04.52	77.5¢/kg	68.9¢/kg	60.3¢/kg	51.7¢/kg	43.1¢/kg	34.4¢/kg	25.8¢/kg	17.2¢/kg	8.6¢/kg	Free
9909.04.53	25.9¢/kg + 7.6%	23¢/kg + 6.8%	20.1¢/kg + 5.9%	17.2¢/kg + 5.1%	14.4¢/kg + 4.2%	11.5¢/kg + 3.4%	8.6¢/kg + 2.5%	5.7¢/kg + 1.7%	2.8¢/kg + 0.8%	Free
9909.04.54	21.1¢/liter + 13.4%	18.8¢/liter + 11.9%	16.4¢/liter + 10.4%	14.1¢/liter + 8.9%	11.7¢/liter + 7.4%	9.4¢/liter + 5.9%	7¢/liter + 4.4%	4.7¢/liter + 2.9%	2.3¢/liter + 1.4%	Free
9909.04.55	72.3¢/kg + 5.7%	64.3¢/kg + 5.1%	56.2¢/kg + 4.4%	48.2¢/kg + 3.8%	40.2¢/kg + 3.2%	32.1¢/kg + 2.5%	24.1¢/kg + 1.9%	16¢/kg + 1.2%	8¢/kg + 0.6%	Free
9909.12.20	147.4%	131%	114.6%	98.2%	81.9%	65.5%	49.1%	32.7%	16.3%	Free
9909.12.40	118.6%	105.4%	92.2%	79%	65.9%	52.7%	39.5%	26.3%	13.1%	Free
9909.17.10	30.4¢/kg	27¢/kg	23.7¢/kg	20.3¢/kg	16.9¢/kg	13.5¢/kg	10.1¢/kg	6.7¢/kg	3.3¢/kg	Free

Annex II (continued)
-220-

HTS Subheading	December 17, 2001	2002	2003	2004	2005	2006	2007	2008	2009	2010
9909.17.15	32.1¢/kg	28.5¢/kg	25¢/kg	21.4¢/kg	17.8¢/kg	14.2¢/kg	10.7¢/kg	7.1¢/kg	3.5¢/kg	Free
9909.17.20	30.5¢/kg + 4.5%	27.1¢/kg + 4%	23.7¢/kg + 3.5%	20.3¢/kg + 3%	16.9¢/kg + 2.5%	13.5¢/kg + 2%	10.1¢/kg + 1.5%	6.7¢/kg + 1%	3.3¢/kg + 0.5%	Free
9909.17.25	15.2¢/kg of total sugars + 4.5%	13.5¢/kg of total sugars + 4%	11.8¢/kg of total sugars + 3.5%	10.1¢/kg of total sugars + 3%	8.4¢/kg of total sugars + 2.5%	6.7¢/kg of total sugars + 2%	5¢/kg of total sugars + 1.5%	3.3¢/kg of total sugars + 1%	1.6¢/kg of total sugars + 0.5%	Free
9909.17.30	30.5¢/kg of total sugars + 4.5%	27.1¢/kg of total sugars + 4%	23.7¢/kg of total sugars + 3.5%	20.3¢/kg of total sugars + 3%	16.9¢/kg of total sugars + 2.5%	13.5¢/kg of total sugars + 2%	10.1¢/kg of total sugars + 1.5%	6.7¢/kg of total sugars + 1%	3.3¢/kg of total sugars + 0.5%	Free
9909.17.35	36¢/kg + 9.3%	32¢/kg + 8.3%	28¢/kg + 7.2%	24¢/kg + 6.2%	20¢/kg + 5.2%	16¢/kg + 4.1%	12¢/kg + 3.1%	8¢/kg + 2%	4¢/kg + 1%	Free
9909.17.40	30.2¢/kg	26.8¢/kg	23.5¢/kg	20.1¢/kg	16.8¢/kg	13.4¢/kg	10¢/kg	6.7¢/kg	3.3¢/kg	Free
9909.17.45	27.4¢/kg + 7.6%	24.4¢/kg + 6.8%	21.3¢/kg + 5.9%	18.3¢/kg + 5.1%	15.2¢/kg + 4.2%	12.2¢/kg + 3.4%	9.1¢/kg + 2.5%	6.1¢/kg + 1.7%	3¢/kg + 0.8%	Free
9909.17.50	33.4¢/kg + 7.6%	29.7¢/kg + 6.8%	26¢/kg + 5.9%	22.3¢/kg + 5.1%	18.6¢/kg + 4.2%	14.8¢/kg + 3.4%	11.1¢/kg + 2.5%	7.4¢/kg + 1.7%	3.7¢/kg + 0.8%	Free
9909.17.55	33.4¢/kg + 5.4%	29.7¢/kg + 4.8%	26¢/kg + 4.2%	22.3¢/kg + 3.6%	18.6¢/kg + 3%	14.8¢/kg + 2.4%	11.1¢/kg + 1.8%	7.4¢/kg + 1.2%	3.7¢/kg + 0.6%	Free
9909.17.60	38¢/kg + 7.6%	33.8¢/kg + 6.8%	29.6¢/kg + 5.9%	25.3¢/kg + 5.1%	21.1¢/kg + 4.2%	16.9¢/kg + 3.4%	12.6¢/kg + 2.5%	8.4¢/kg + 1.7%	4.2¢/kg + 0.8%	Free
9909.17.65	21.3¢/kg + 7.6%	18.9¢/kg + 6.8%	16.5¢/kg + 5.9%	14.2¢/kg + 5.1%	11.8¢/kg + 4.2%	9.4¢/kg + 3.4%	7.1¢/kg + 2.5%	4.7¢/kg + 1.7%	2.3¢/kg + 0.8%	Free
9909.17.70	63.3¢/kg + 7.6%	56.3¢/kg + 6.8%	49.2¢/kg + 5.9%	42.2¢/kg + 5.1%	35.2¢/kg + 4.2%	28.1¢/kg + 3.4%	21.1¢/kg + 2.5%	14¢/kg + 1.7%	7¢/kg + 0.8%	Free
9909.17.75	25.9¢/kg + 7.6%	23¢/kg + 6.8%	20.1¢/kg + 5.9%	17.2¢/kg + 5.1%	14.4¢/kg + 4.2%	11.5¢/kg + 3.4%	8.6¢/kg + 2.5%	5.7¢/kg + 1.7%	2.8¢/kg + 0.8%	Free
9909.52.20	28.2¢/kg	25.1¢/kg	21.9¢/kg	18.8¢/kg	15.7¢/kg	12.5¢/kg	9.4¢/kg	6.2¢/kg	3.1¢/kg	Free
9909.52.40	7¢/kg	6.2¢/kg	5.4¢/kg	4.6¢/kg	3.9¢/kg	3.1¢/kg	2.3¢/kg	1.5¢/kg	0.7¢/kg	Free

Annex II (continued)
-221-

Section C. Effective with respect to goods of Jordan, under the terms of general note 18 to the tariff schedule, entered, or withdrawn from warehouse for consumption, on or after the dates listed below.

(1). Effective on the dates set forth in this paragraph:

(a). Additional U.S. note 1 to chapter 58 is modified by:

(i). On December 17, 2001, inserting the following immediately above the column 2 rate of duty-

"column 1 (special)- 1.7%, but in the case of embroidery in the piece note less than the rate which would apply to such product if not embroidered (JO)"

(ii). On January 1, 2002, deleting the rate preceding the symbol "(JO)" and inserting a "Free" rate of duty in lieu thereof.

(iii). On January 1, 2003, deleting "Free (JO)".

(b)(i). Additional U.S. note 2 to chapter 58 is modified by inserting opposite "column 1 (special)-", after the rate for goods of Mexico, the following on the dates set forth below:

December 17,2001	January 1, 2002	January 1, 2003	January 1, 2004
4.4%, but in the case of embroidery in the piece not less than the rate which would apply to such product if not embroidered (JO)	2.9%, but in the case of embroidery in the piece not less than the rate which would apply to such product if not embroidered (JO)	1.4%, but in the case of embroidery in the piece not less than the rate which would apply to such product if not embroidered (JO)	Free (JO)

(ii). On January 1, 2005, delete "Free (JO)" from such note 2.

(c)(i). Additional U.S. note 3 to chapter 58 is modified by inserting opposite "column 1 (special)-", after the rate for goods of Mexico, the following on the dates set forth below:

December 17, 2001	January 1, 2002	January 1, 2003	January 1, 2004
5.8%, but in the case of embroidery in the piece not less than the rate which would apply to such product if not embroidered (JO)	3.9%, but in the case of embroidery in the piece not less than the rate which would apply to such product if not embroidered (JO)	1.9%, but in the case of embroidery in the piece not less than the rate which would apply to such product if not embroidered (JO)	Free (JO)

(ii). On January 1, 2005, delete "Free (JO)" from such note 3.

(d). Additional U.S. note 4 to chapter 58 is modified by:

(i). On December 17, 2001, inserting the following immediately above the column 2 rate of duty-

"column 1 (special)- 5.8%, but in the case of embroidery in the piece note less than the rate which would apply to such product if not embroidered (JO)"

(ii). On January 1, 2002, deleting "5.8%" and inserting "3.9%" in lieu thereof.

Annex II (continued)
-222-

(iii). On January 1, 2003, deleting "3.9%" and inserting "1.9%" in lieu thereof.
(iv). On January 1, 2004, deleting the rate preceding the symbol "(JO)" and inserting a "Free" rate of duty in lieu thereof.
(v). On January 1, 2005, deleting "Free (JO)".

(e). Additional U.S. note 5 to chapter 58 is modified by:
(i). On December 17, 2001, inserting the following immediately above the column 2 rate of duty-

"column 1 (special)- 4.4%, but in the case of embroidery in the piece note less than the rate which would apply to such product if not embroidered (JO)"

(ii). On January 1, 2002, deleting "4.4%" and inserting "2.9%" in lieu thereof.
(iii). On January 1, 2003, deleting "2.9%" and inserting "1.4%" in lieu thereof.
(iv). On January 1, 2004, deleting the rate preceding the symbol "(JO)" and inserting a "Free" rate of duty in lieu thereof.
(v). On January 1, 2005, deleting "Free (JO)".

(2). Effective on January 1, 2003, the Rates of Duty 1 Special subcolumn for subheading 5810.91.00 is modified by deleting the "(JO)" symbol and the rate preceding such symbol and inserting in the parentheses following the "Free" rate in such subcolumn the symbol "JO" in alphabetical order.

(3). Effective on January 1, 2005, the Rates of Duty 1 Special subcolumn for subheadings 5810.992.10, 5810.92.90, 5810.99.10 and 5810.99.90 is modified by deleting the "(JO)" symbol and the rate preceding such symbol and inserting in the parentheses following the "Free" rate in such subcolumn the symbol "JO" in alphabetical order.

(4). Effective on January 1, 2010:
(a). For the following provisions, in the Rates of Duty 1 Special subcolumn, insert in the parentheses following the "Free" rate in such subcolumn the symbol "JO" in alphabetical order:

4202.12.20	4202.12.60	6104.12.00	6109.90.10	6110.20.20
4202.12.40	4202.12.80	6104.62.20	6110.20.10	6110.30.30

(b). For subheading 9802.00.60, in the Rates of Duty 1 Special subcolumn, in the parentheses following "A duty upon the value of such processing outside the United States (see U.S. note 3 of this subchapter)", delete the symbol "JO", and insert in the parentheses following "Free" the symbol "JO" in alphabetical order.

(c). For subheading 9802.00.80, in the Rates of Duty 1 Special subcolumn, in the parentheses following "A duty upon the full value of the imported article, less the cost or value of such products of the United States (see U.S. note 4 of this subchapter)", delete the symbol "JO" and insert in the parentheses following "Free" the symbol "JO" in alphabetical order.

Annex II (continued)
-223-

(5). Effective on January 1, 2011, the Rates of Duty 1 Special subcolumn is modified by, for the following subheadings, deleting the "(JO)" symbol and the rate preceding such symbol and inserting in the parentheses following the "Free" rate in such subcolumn the symbol "JO" in alphabetical order:

0401.30.25	0406.20.28	0406.90.74	1806.20.73	1901.90.47
0401.30.75	0406.20.33	0406.90.78	1806.20.77	1901.90.54
0402.10.50	0406.20.39	0406.90.84	1806.20.82	1901.90.58
0402.21.25	0406.20.48	0406.90.88	1806.20.83	2008.11.15
0402.21.50	0406.20.53	0406.90.92	1806.20.87	2008.11.35
0402.21.90	0406.20.63	0406.90.94	1806.20.89	2008.11.60
0402.29.50	0406.20.67	0406.90.97	1806.20.94	2101.12.38
0402.91.70	0406.20.71	1202.10.80	1806.20.98	2101.12.48
0402.91.90	0406.20.75	1202.20.80	1806.32.06	2101.12.58
0402.99.45	0406.20.79	1517.90.60	1806.32.08	2101.20.38
0402.99.55	0406.20.83	1701.11.50	1806.32.16	2101.20.48
0402.99.90	0406.20.87	1701.12.50	1806.32.18	2101.20.58
0403.10.50	0406.20.91	1701.91.30	1806.32.70	2103.90.78
0403.90.16	0406.30.18	1701.91.48	1806.32.80	2105.00.40
0403.90.45	0406.30.28	1701.91.58	1806.90.08	2106.90.09
0403.90.55	0406.30.38	1701.99.50	1806.90.10	2106.90.26
0403.90.65	0406.30.48	1702.20.28	1806.90.18	2106.90.36
0403.90.78	0406.30.53	1702.30.28	1806.90.20	2106.90.46
0403.90.95	0406.30.63	1702.40.28	1806.90.28	2106.90.66
0404.10.15	0406.30.67	1702.60.28	1806.90.30	2106.90.72
0404.10.90	0406.30.71	1702.90.20	1806.90.39	2106.90.76
0404.90.50	0406.30.75	1702.90.58	1806.90.49	2106.90.80
0405.10.20	0406.30.79	1702.90.68	1806.90.59	2106.90.87
0405.20.30	0406.30.83	1704.90.58	1901.10.30	2106.90.91
0405.20.70	0406.30.87	1704.90.68	1901.10.40	2106.90.94
0405.90.20	0406.30.91	1704.90.78	1901.10.75	2106.90.97
0406.10.08	0406.40.70	1806.10.15	1901.10.85	2202.90.28
0406.10.18	0406.90.12	1806.10.28	1901.20.15	2309.90.28
0406.10.28	0406.90.18	1806.10.38	1901.20.25	2309.90.48
0406.10.38	0406.90.32	1806.10.55	1901.20.35	5201.00.18
0406.10.48	0406.90.37	1806.10.75	1901.20.50	5201.00.28
0406.10.58	0406.90.42	1806.20.26	1901.20.60	5201.00.38
0406.10.68	0406.90.48	1806.20.28	1901.20.70	5201.00.80
0406.10.78	0406.90.54	1806.20.36	1901.90.36	5202.99.30
0406.10.88	0406.90.68	1806.20.38	1901.90.43	5203.00.30

[FR Doc. 01–30785
Filed 12–10–01; 8:51 am]
Billing code 3190–01–C

Reader Aids

Federal Register

Vol. 66, No. 240

Thursday, December 13, 2001

CUSTOMER SERVICE AND INFORMATION

Federal Register/Code of Federal Regulations

General Information, indexes and other finding aids	**202–523–5227**
Laws	**523–5227**
Presidential Documents	
Executive orders and proclamations	**523–5227**
The United States Government Manual	**523–5227**
Other Services	
Electronic and on-line services (voice)	**523–3447**
Privacy Act Compilation	**523–3187**
Public Laws Update Service (numbers, dates, etc.)	**523–6641**
TTY for the deaf-and-hard-of-hearing	**523–5229**

ELECTRONIC RESEARCH

World Wide Web

Full text of the daily Federal Register, CFR and other publications is located at: **http://www.access.gpo.gov/nara**

Federal Register information and research tools, including Public Inspection List, indexes, and links to GPO Access are located at: **http://www.nara.gov/fedreg**

E-mail

FEDREGTOC-L (Federal Register Table of Contents LISTSERV) is an open e-mail service that provides subscribers with a digital form of the Federal Register Table of Contents. The digital form of the Federal Register Table of Contents includes HTML and PDF links to the full text of each document.

To join or leave, go to **http://listserv.access.gpo.gov** and select *Online mailing list archives, FEDREGTOC-L, Join or leave the list (or change settings);* then follow the instructions.

PENS (Public Law Electronic Notification Service) is an e-mail service that notifies subscribers of recently enacted laws.

To subscribe, go to **http://hydra.gsa.gov/archives/publaws-l.html** and select *Join or leave the list* (or change settings); then follow the instructions.

FEDREGTOC-L and **PENS** are mailing lists only. We cannot respond to specific inquiries.

Reference questions. Send questions and comments about the Federal Register system to: **info@fedreg.nara.gov**

The Federal Register staff cannot interpret specific documents or regulations.

FEDERAL REGISTER PAGES AND DATE, DECEMBER

60139–62906 3
62907–63148 4
63149–63306 5
63307–63486 6
63487–63620 7
63621–63904 10
63905–64094 11
64095–64348 12
64349–64734 13

CFR PARTS AFFECTED DURING DECEMBER

At the end of each month, the Office of the Federal Register publishes separately a List of CFR Sections Affected (LSA), which lists parts and sections affected by documents published since the revision date of each title.

3 CFR

Proclamations:
7507 62907
7508 62909
7509 62911
7510 63149
7511 63899
7512 64497
7513 64095

Executive Orders:
11582 (See EO 13238) 63903
12958 (See Order of December 10, 2001) 64347
13238 63903

Orders:
Order of December 10, 2001 64347

Administrative Orders:
Presidential Determinations:
No. 02–07 of November 21, 2001 63487

5 CFR

302 63905
317 63905
330 63905
333 63905
335 63905
534 63906
591 63906
930 63906
6001 60139

Proposed Rules:
890 64160

7 CFR

301 63151

Proposed Rules:
352 63005
1410 63339

9 CFR

70 63588
78 63910
88 63588
94 .....62913, 63910, 63911

10 CFR

Proposed Rules:
72 63964

Proposed Rules:
94 63633

12 CFR

5 62914

Proposed Rules:
Ch. IX 63008
226 64381
584 63517

14 CFR

25 64349
39 .....60140, 60143, 60144, 60145, 62915, 63154, 63157, 63159, 63307, 63621, 63912, 63913, 63915, 64097, 64099, 64100, 64102, 64104, 64105, 64107, 64109, 64112, 64114, 64116, 64117, 64119, 64121, 64124, 64125, 64128, 64129, 64132, 64133, 64135, 64138
71 .....63489, 63623
73 63433
91 63888
93 63294
97 .....64139, 64141
107 63474
108 63474

Proposed Rules:
39 .....63009, 63010, 63341
71 .....60162, 63517

15 CFR

801 .....63916, 63918

16 CFR

3 64142
4 64142
305 63749

17 CFR

Proposed Rules:
15 64383

18 CFR

381 63162

19 CFR

12 63490

20 CFR

655 63298

Proposed Rules:
404 63634

21 CFR

510 .....63163, 63164, 63499
520 .....63165, 63166
524 63164
556 62916
558 .....62916, 63499, 63500

Proposed Rules:
500 63519
1310 64173

24 CFR

30 63436

26 CFR

1 63920

301....64351
602....64076, 64351
Proposed Rules:
1....63203, 64385
301....64386
602....64386

29 CFR

578....63501
579....63501
580....63501

30 CFR

256....60147
944....62917
Proposed Rules:
936....63968

31 CFR

211....63623

33 CFR

100....63624
117....62935, 62936, 62938, 62939, 62940, 63626, 63627
165....60151, 62940, 64144
Proposed Rules:
1....63640
147....63642
175....63645
181....63650

34 CFR

Proposed Rules:
Ch. VI....63203

37 CFR

201....62942, 63920

38 CFR

17....63446, 63449
20....60152
Proposed Rules:
3....64174

39 CFR

20....64353

40 CFR

8....63454
52....63311, 63921, 64146, 64148
62....63311, 63938, 64151, 64152
63....63313
70....62945, 62946, 62949, 62951, 62954, 62961, 62967, 62969, 63166, 63168, 63170, 63175, 63180, 63184, 63188, 63318, 63503
180....63192
261....60153, 62973
271....63331
300....64357
721....63941
Proposed Rules:
52....63204, 63343, 63972, 63982, 64176
60....64176
62....63985, 64207, 64208
80....60153
300....64387

42 CFR

411....60154
1001....62980, 63749

43 CFR

3600....63334
3610....63334
3620....63334
3800....63334

44 CFR

64....63627
Proposed Rules:
61....60176

47 CFR

1....62992
25....63512
73....60156, 60157, 63199, 63629
76....62992
101....63512
Proposed Rules:
51....63651
73....63209, 63653, 63654, 63986, 63997

48 CFR

202....63334
212....63335
215....63334
217....63336
237....63335
242....63334
Proposed Rules:
235....63348
1823....64391
1836....64391
1852....64391

49 CFR

241....63942
571....60157, 64154, 64358
572....64368
Proposed Rules:
107....63096
171....63096
172....63096
173....63096
177....63096
178....63096
180....63096
219....64000
573....64078, 64087
577....64078, 64087

50 CFR

17....62993, 63752
230....64378
600....63199
622....60161
635....63003, 64378
648....63003
660....63199, 63630
679....64380
Proposed Rules:
17....63349, 63654
20....63665
21....63349, 63665
648....63013, 63666, 64392

REMINDERS

The items in this list were editorially compiled as an aid to Federal Register users. Inclusion or exclusion from this list has no legal significance.

RULES GOING INTO EFFECT DECEMBER 13, 2001

ENVIRONMENTAL PROTECTION AGENCY

Air quality implementation plans; approval and promulgation; various States:

Illinois; published 11-13-01

Indiana; published 11-13-01

Wisconsin; published 11-13-01

Superfund program:

National oil and hazardous substances contingency plan—

National priorities list update; published 12-13-01

FEDERAL COMMUNICATIONS COMMISSION

Digital television stations; table of assignments:

Louisiana; published 11-5-01

Michigan; published 11-5-01

HEALTH AND HUMAN SERVICES DEPARTMENT

Protection of human subjects:

Pregnant women and human fetuses as research subjects and pertaining to human in vitro fertilization; published 11-13-01

TRANSPORTATION DEPARTMENT

Federal Aviation Administration

Airworthiness directives:

Raytheon; published 11-21-01

TREASURY DEPARTMENT

Internal Revenue Service

Procedure and administration:

Returns and return information disclosure by other agencies; published 12-13-01

COMMENTS DUE NEXT WEEK

AGRICULTURE DEPARTMENT

Agricultural Marketing Service

Beef promotion and research; comments due by 12-18-01; published 10-19-01 [FR 01-26395]

AGRICULTURE DEPARTMENT

Animal and Plant Health Inspection Service

Exportation and importation of animals and animal products:

Bovine spongiform encephalopathy; disease status change—

Japan; comments due by 12-17-01; published 10-16-01 [FR 01-25953]

AGRICULTURE DEPARTMENT

Animal and Plant Health Inspection Service

Plant-related quarantine, domestic:

Mediterranean fruit fly; comments due by 12-18-01; published 10-19-01 [FR 01-26329]

COMMERCE DEPARTMENT

National Oceanic and Atmospheric Administration

Fishery conservation and management:

West Coast States and Western Pacific fisheries—

Pacific Coast groundfish; comments due by 12-20-01; published 12-5-01 [FR 01-30112]

DEFENSE DEPARTMENT

Federal Acquisition Regulation (FAR):

Architect-engineer contractors selection; new consolidated form; comments due by 12-18-01; published 10-19-01 [FR 01-26203]

DEFENSE DEPARTMENT

Federal Acquisition Regulation (FAR):

Cost-reimbursement contracts for services; prompt payment; comments due by 12-21-01; published 10-22-01 [FR 01-26298]

DEFENSE DEPARTMENT

Federal Acquisition Regulation (FAR):

Fixed-price construction contracts; payments; comments due by 12-17-01; published 10-18-01 [FR 01-26009]

DEFENSE DEPARTMENT

Federal Acquisition Regulation (FAR):

Veterans Entrepreneurship and Small Business Development Act of 1999; implementation; comments due by 12-21-01; published 10-22-01 [FR 01-26300]

ENERGY DEPARTMENT

Federal Energy Regulatory Commission

Electric utilities (Federal Power Act):

Standard generator interconnection agreements and procedures; comments due by 12-21-01; published 11-1-01 [FR 01-27438]

Practice and procedure:

Natural gas pipelines and transmitting public utilities (transmission providers); standards of conduct; comments due by 12-20-01; published 11-5-01 [FR 01-27674]

ENVIRONMENTAL PROTECTION AGENCY

Air pollutants, hazardous; national emission standards:

Hydrochloric acid production facilities; extension of comment period; comments due by 12-19-01; published 11-19-01 [FR 01-28857]

ENVIRONMENTAL PROTECTION AGENCY

Air pollutants, hazardous; national emission standards:

Pesticide active ingredient production; comments due by 12-21-01; published 11-21-01 [FR 01-29098]

ENVIRONMENTAL PROTECTION AGENCY

Air pollutants, hazardous; national emission standards:

Pesticide active ingredient production; comments due by 12-21-01; published 11-21-01 [FR 01-29099]

Air pollution control; new motor vehicles and engines:

Nonroad large spark ignition engines and recreational engines (marine and land-based); emissions control; comments due by 12-19-01; published 10-5-01 [FR 01-23591]

Correction; comments due by 12-19-01; published 11-2-01 [FR 01-27466]

Air pollution; standards of performance for new stationary sources:

Large municipal waste combustors; emission guidelines, etc.; comments due by 12-17-01; published 11-16-01 [FR 01-28085]

ENVIRONMENTAL PROTECTION AGENCY

Air pollution; standards of performance for new stationary sources:

Large municipal waste combustors; emission guidelines, etc.; comments due by 12-17-01; published 11-16-01 [FR 01-28084]

ENVIRONMENTAL PROTECTION AGENCY

Air programs; approval and promulgation; State plans for designated facilities and pollutants:

Kansas; comments due by 12-19-01; published 11-19-01 [FR 01-28858]

ENVIRONMENTAL PROTECTION AGENCY

Air programs; State authority delegations:

Arizona; comments due by 12-17-01; published 11-16-01 [FR 01-28342]

ENVIRONMENTAL PROTECTION AGENCY

Air programs; State authority delegations:

Arizona; comments due by 12-17-01; published 11-16-01 [FR 01-28343]

Air quality implementation plans; approval and promulgation; various states:

Missouri; comments due by 12-17-01; published 11-15-01 [FR 01-28520]

Air quality implementation plans; √A√approval and promulgation; various States; air quality planning purposes; designation of areas:

Arizona; comments due by 12-19-01; published 11-19-01 [FR 01-28859]

ENVIRONMENTAL PROTECTION AGENCY

Air quality implementation plans; approval and promulgation; various States:

California; comments due by 12-17-01; published 11-15-01 [FR 01-28341]

ENVIRONMENTAL PROTECTION AGENCY

Air quality implementation plans; approval and promulgation; various States:

California; comments due by 12-17-01; published 11-16-01 [FR 01-28344]

ENVIRONMENTAL PROTECTION AGENCY

Air quality implementation plans; approval and promulgation; various States:

California; comments due by 12-17-01; published 11-16-01 [FR 01-28345]

ENVIRONMENTAL PROTECTION AGENCY
Air quality implementation plans; approval and promulgation; various States:
Maryland; comments due by 12-17-01; published 11-15-01 [FR 01-28187]

ENVIRONMENTAL PROTECTION AGENCY
Air quality implementation plans; approval and promulgation; various States:
Maryland; comments due by 12-17-01; published 11-15-01 [FR 01-28188]

ENVIRONMENTAL PROTECTION AGENCY
Air quality implementation plans; approval and promulgation; various States:
Missouri; comments due by 12-17-01; published 11-15-01 [FR 01-28519]

ENVIRONMENTAL PROTECTION AGENCY
Air quality implementation plans; approval and promulgation; various States:
Missouri; comments due by 12-17-01; published 11-16-01 [FR 01-28737]

ENVIRONMENTAL PROTECTION AGENCY
Air quality implementation plans; approval and promulgation; various States:
Montana; comments due by 12-17-01; published 11-15-01 [FR 01-28189]

ENVIRONMENTAL PROTECTION AGENCY
Air quality implementation plans; approval and promulgation; various States:
Montana; comments due by 12-17-01; published 11-15-01 [FR 01-28190]

ENVIRONMENTAL PROTECTION AGENCY
Hazardous waste program authorizations:
New York; comments due by 12-17-01; published 11-16-01 [FR 01-28627]

ENVIRONMENTAL PROTECTION AGENCY
Hazardous waste program authorizations:
New York; comments due by 12-17-01; published 11-16-01 [FR 01-28628]
Superfund program:
Toxic chemical release reporting; community right-to-know—
Alloys corrosion; report; comments due by 12-20-01; published 8-22-01 [FR 01-21198]

FEDERAL COMMUNICATIONS COMMISSION
Digital television stations; table of assignments:
Connecticut; comments due by 12-17-01; published 10-31-01 [FR 01-27346]
Radio stations; table of assignments:
Alabama; comments due by 12-18-01; published 10-24-01 [FR 01-26751]
Texas; comments due by 12-17-01; published 11-8-01 [FR 01-28074]
Television broadcasting:
Noncommercial educational television; television table of allotments amendment to delete noncommercial reservation of Channel 16 in Pittsburgh, PA; comments due by 12-17-01; published 10-16-01 [FR 01-25997]

GENERAL SERVICES ADMINISTRATION
Acquisition regulations:
Real property leasehold interests; historic preference; comments due by 12-18-01; published 10-19-01 [FR 01-26446]
Federal Acquisition Regulation (FAR):
Architect-engineer contractors selection; new consolidated form; comments due by 12-18-01; published 10-19-01 [FR 01-26203]

GENERAL SERVICES ADMINISTRATION
Federal Acquisition Regulation (FAR):
Cost-reimbursement contracts for services; prompt payment; comments due by 12-21-01; published 10-22-01 [FR 01-26298]

GENERAL SERVICES ADMINISTRATION
Federal Acquisition Regulation (FAR):
Fixed-price construction contracts; payments; comments due by 12-17-01; published 10-18-01 [FR 01-26009]

GENERAL SERVICES ADMINISTRATION
Federal Acquisition Regulation (FAR):
Veterans Entrepreneurship and Small Business Development Act of 1999; implementation; comments due by 12-21-01; published 10-22-01 [FR 01-26300]

LABOR DEPARTMENT
Employment and Training Administration
Aliens:
Labor certification and petition process for temporary employment of nonimmigrant aliens in U.S. agriculture; fee structure modification; comments due by 12-17-01; published 10-24-01 [FR 01-26867]

NATIONAL AERONAUTICS AND SPACE ADMINISTRATION
Federal Acquisition Regulation (FAR):
Architect-engineer contractors selection; new consolidated form; comments due by 12-18-01; published 10-19-01 [FR 01-26203]

NATIONAL AERONAUTICS AND SPACE ADMINISTRATION
Federal Acquisition Regulation (FAR):
Cost-reimbursement contracts for services; prompt payment; comments due by 12-21-01; published 10-22-01 [FR 01-26298]

NATIONAL AERONAUTICS AND SPACE ADMINISTRATION
Federal Acquisition Regulation (FAR):
Fixed-price construction contracts; payments; comments due by 12-17-01; published 10-18-01 [FR 01-26009]

NATIONAL AERONAUTICS AND SPACE ADMINISTRATION
Federal Acquisition Regulation (FAR):
Veterans Entrepreneurship and Small Business Development Act of 1999; implementation; comments due by 12-21-01; published 10-22-01 [FR 01-26300]

NATIONAL CREDIT UNION ADMINISTRATION
Credit unions:
Investment and deposit activities, and corporate credit unions—
Capital and credit concentration limits; comments due by 12-20-01; published 9-21-01 [FR 01-23290]

NUCLEAR REGULATORY COMMISSION
Federal claims collection; comments due by 12-19-01; published 10-5-01 [FR 01-25000]

STATE DEPARTMENT
Irish Peace Process Cultural and Training Program; comments due by 12-17-01; published 10-16-01 [FR 01-25598]
Visas; nonimmigrant documentation:
Irish Peace Process Cultural and Training Program; Q classification; comments due by 12-17-01; published 10-16-01 [FR 01-25597]

TRANSPORTATION DEPARTMENT
Federal Aviation Administration
Airworthiness directives:
Airbus; comments due by 12-19-01; published 11-19-01 [FR 01-28795]
Bombardier; comments due by 12-19-01; published 11-19-01 [FR 01-28797]
British Aerospace; comments due by 12-21-01; published 11-19-01 [FR 01-28809]
CFM International, S.A.; comments due by 12-18-01; published 10-19-01 [FR 01-26325]

TRANSPORTATION DEPARTMENT
Federal Aviation Administration
Airworthiness directives:
Eurocopter France; comments due by 12-17-01; published 10-16-01 [FR 01-25694]

TRANSPORTATION DEPARTMENT
Federal Aviation Administration
Airworthiness directives:
Honeywell; comments due by 12-18-01; published 10-19-01 [FR 01-26323]

TRANSPORTATION DEPARTMENT
Federal Aviation Administration
Airworthiness directives:
McDonnell Douglas; comments due by 12-17-01; published 10-17-01 [FR 01-25663]

TRANSPORTATION DEPARTMENT
Federal Aviation Administration
Airworthiness directives:

McDonnell Douglas; comments due by 12-17-01; published 10-16-01 [FR 01-25662]

TRANSPORTATION DEPARTMENT
Federal Aviation Administration

Airworthiness directives:
Pilatus Britten-Norman Ltd.; comments due by 12-21-01; published 11-23-01 [FR 01-29192]
Pratt & Whitney; comments due by 12-20-01; published 11-20-01 [FR 01-28707]

Airworthiness standards:
Special conditions—
Gulfstream G-1159, G-1159A, G-1159B series airplanes; comments due by 12-17-01; published 11-16-01 [FR 01-28676]

Class E5 airspace; comments due by 12-20-01; published 11-20-01 [FR 01-28496]

TRANSPORTATION DEPARTMENT
Federal Highway Administration

Engineering and traffic operations:
Design-build contracting; comments due by 12-18-01; published 10-19-01 [FR 01-26234]

TREASURY DEPARTMENT

Alcohol, Tobacco and Firearms Bureau

Alchohol, tobacco, and other excise taxes:
Tobacco products and cigarette papers and tubes—
Removal from manufacturer's premises for experimental purposes; application requirement eliminated; comments due by 12-17-01; published 10-17-01 [FR 01-25843]

VETERANS AFFAIRS DEPARTMENT

Adjudication; pensions, compensation, dependency, etc.:
Acceptable evidence from foreign countries; comments due by 12-18-01; published 10-19-01 [FR 01-26382]

LIST OF PUBLIC LAWS

This is a continuing list of public bills from the current session of Congress which have become Federal laws. It may be used in conjunction with ''P L U S'' (Public Laws Update Service) on 202–523–6641. This list is also available online at *http://www.nara.gov/fedreg/plawcurr.html*.

The text of laws is not published in the **Federal Register** but may be ordered in ''slip law'' (individual pamphlet) form from the Superintendent of Documents, U.S. Government Printing Office, Washington, DC 20402 (phone, 202–512–1808). The text will also be made available on the Internet from GPO Access at *http://www.access.gpo.gov/nara/nara005.html*. Some laws may not yet be available.

H.J. Res. 76/P.L. 107–79
Making further continuing appropriations for the fiscal year 2002, and for other purposes. (Dec. 7, 2001; 115 Stat. 809)

Last List November 30, 2001

Public Laws Electronic Notification Service (PENS)

PENS is a free electronic mail notification service of newly enacted public laws. To subscribe, go to *http://hydra.gsa.gov/archives/publaws-l.html* or send E-mail to **listserv@listserv.gsa.gov** with the following text message:

SUBSCRIBE PUBLAWS-L
Your Name.

Note: This service is strictly for E-mail notification of new laws. The text of laws is not available through this service. **PENS** cannot respond to specific inquiries sent to this address.